PSC/PSI Feature Overview

Shelter Island Workshop

Remote Operations

September 18, 2002

Joseph Skelly

The PSC/PSI System

Power Supply Controller / Power Supply Interface

Commercialized System

Developed for SNS

Used also at BNL in the BAF

Booster Application Facility

(A Heavy Ion Irradiation Facility for NASA)

Goals: Reliability, Enhanced Diagnostics

The PSC/PSI System
Overall View

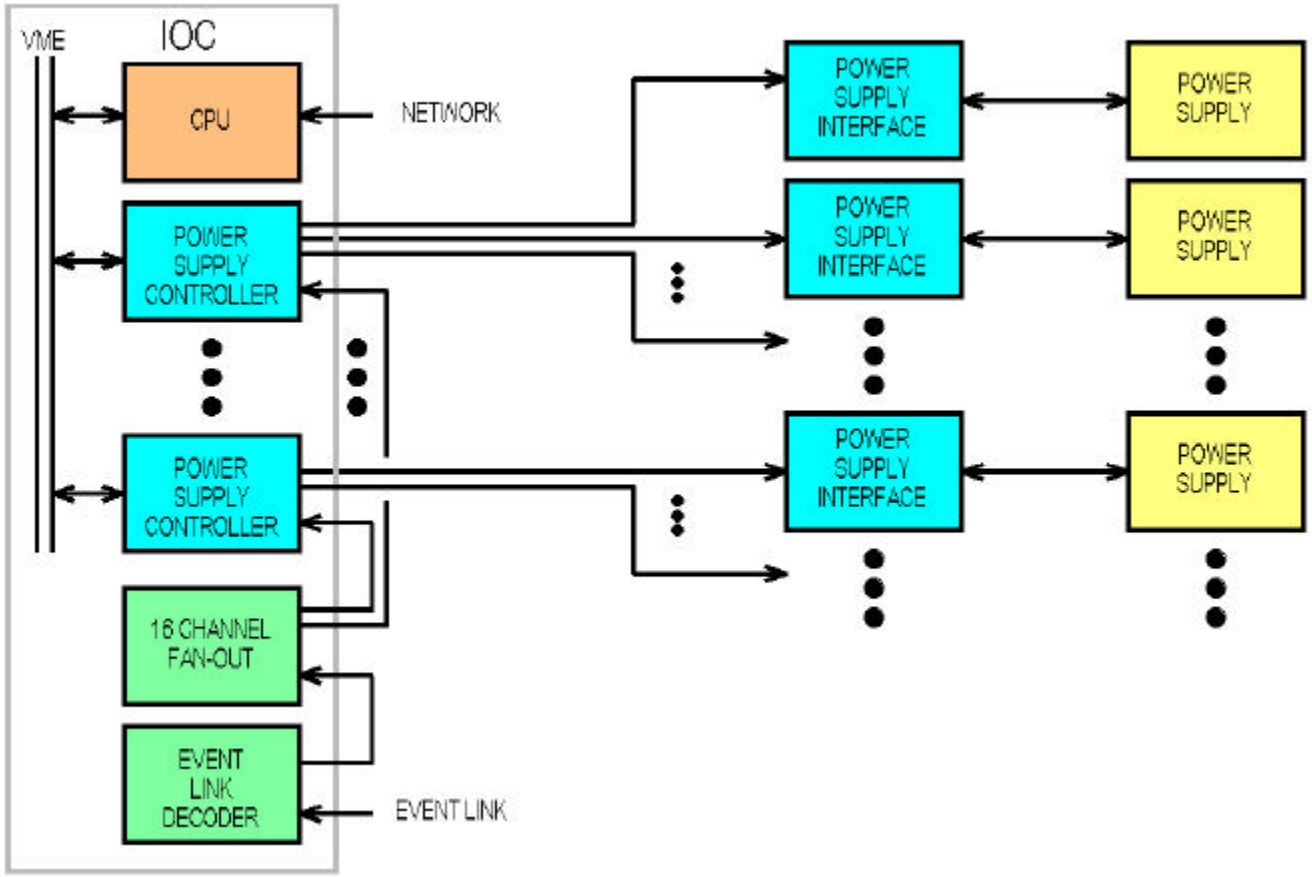

The PSC/PSI System
The PSI

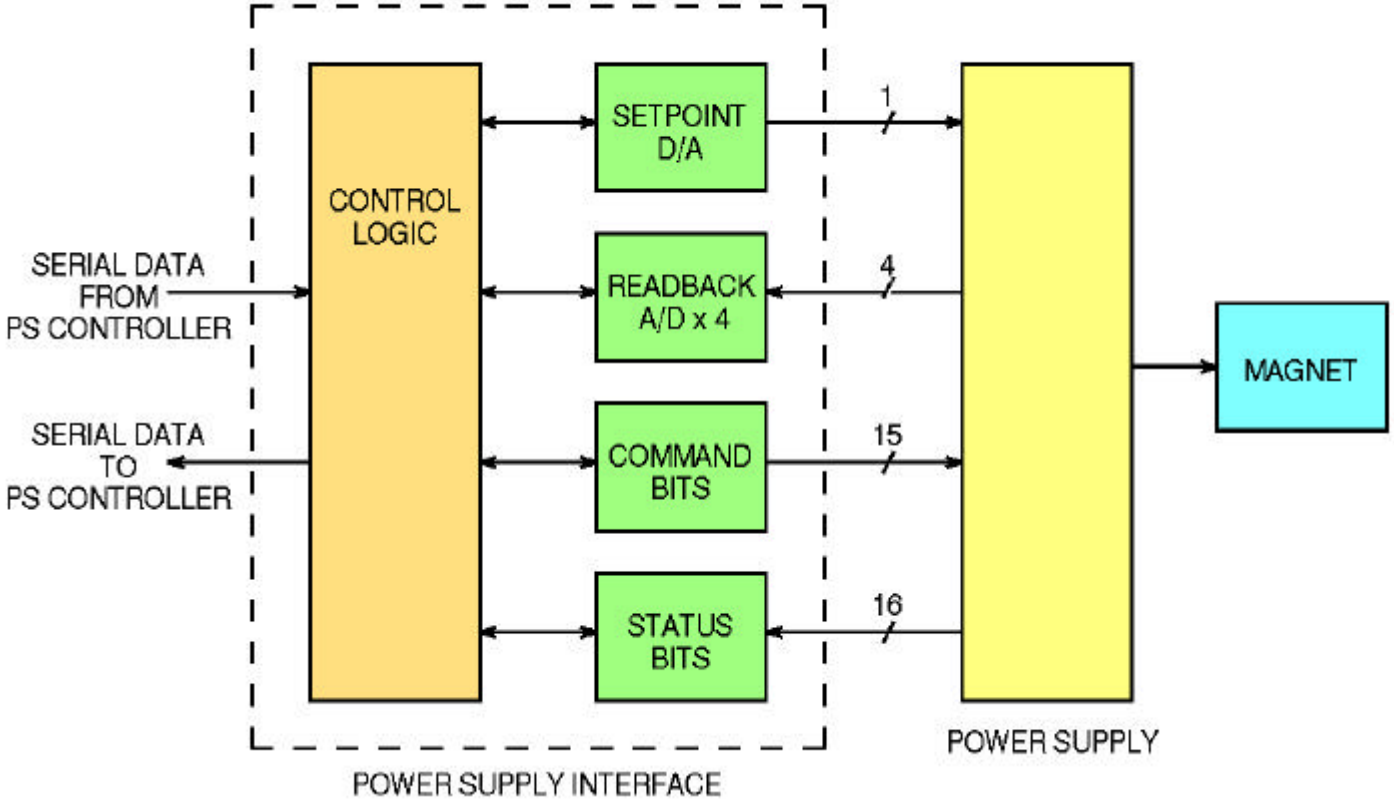

The PSC/PSI System
The PSC

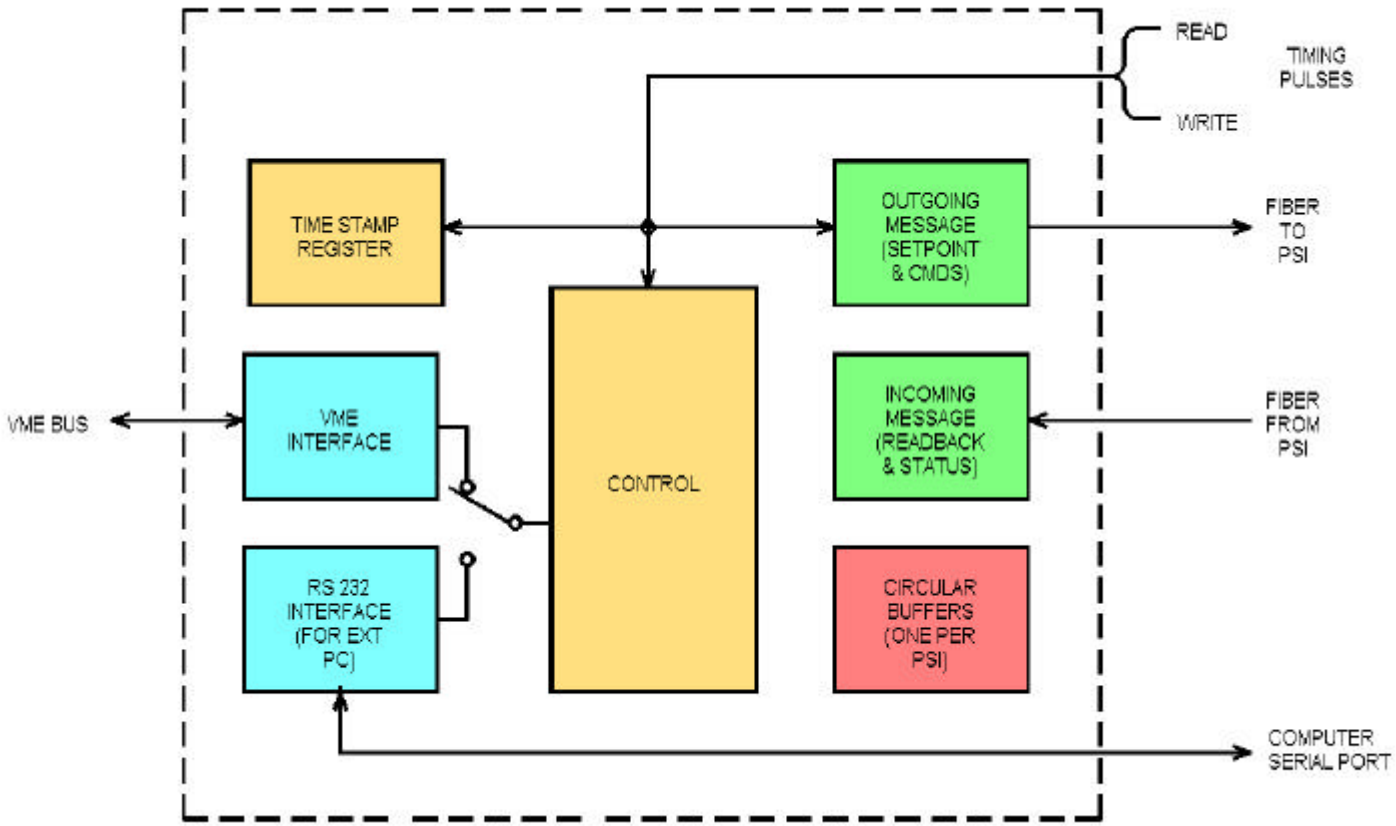

Configuration
Test Configuration

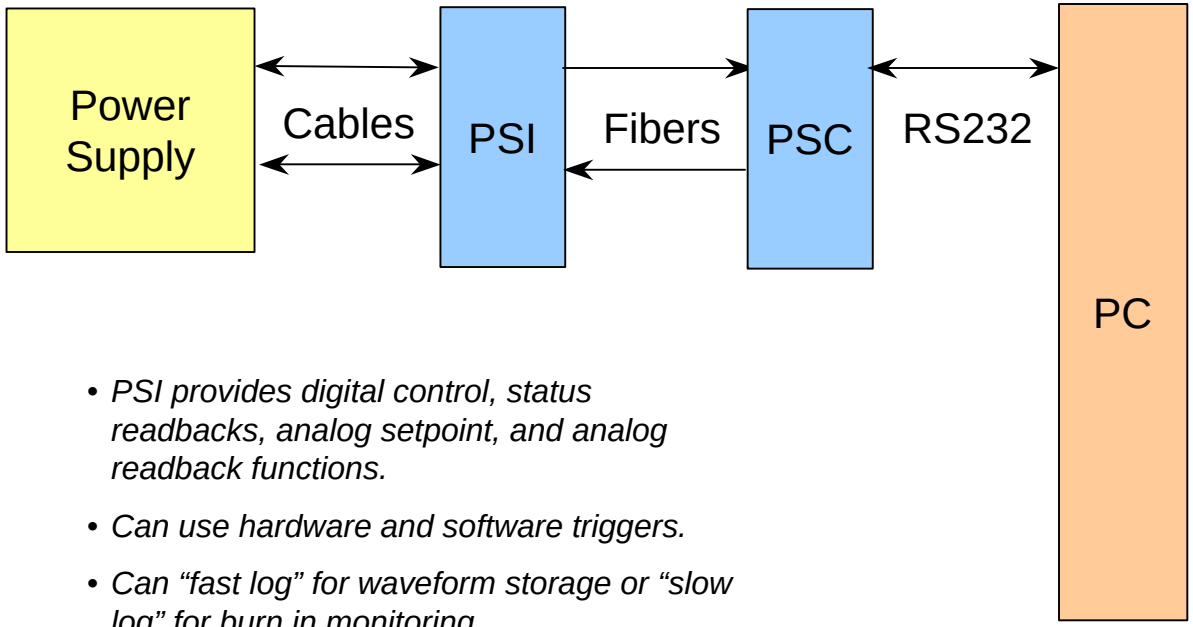

- *PSI provides digital control, status readbacks, analog setpoint, and analog readback functions.*
- *Can use hardware and software triggers.*
- *Can "fast log" for waveform storage or "slow log" for burn in monitoring.*

The PSC/PSI System
The Test Configuration

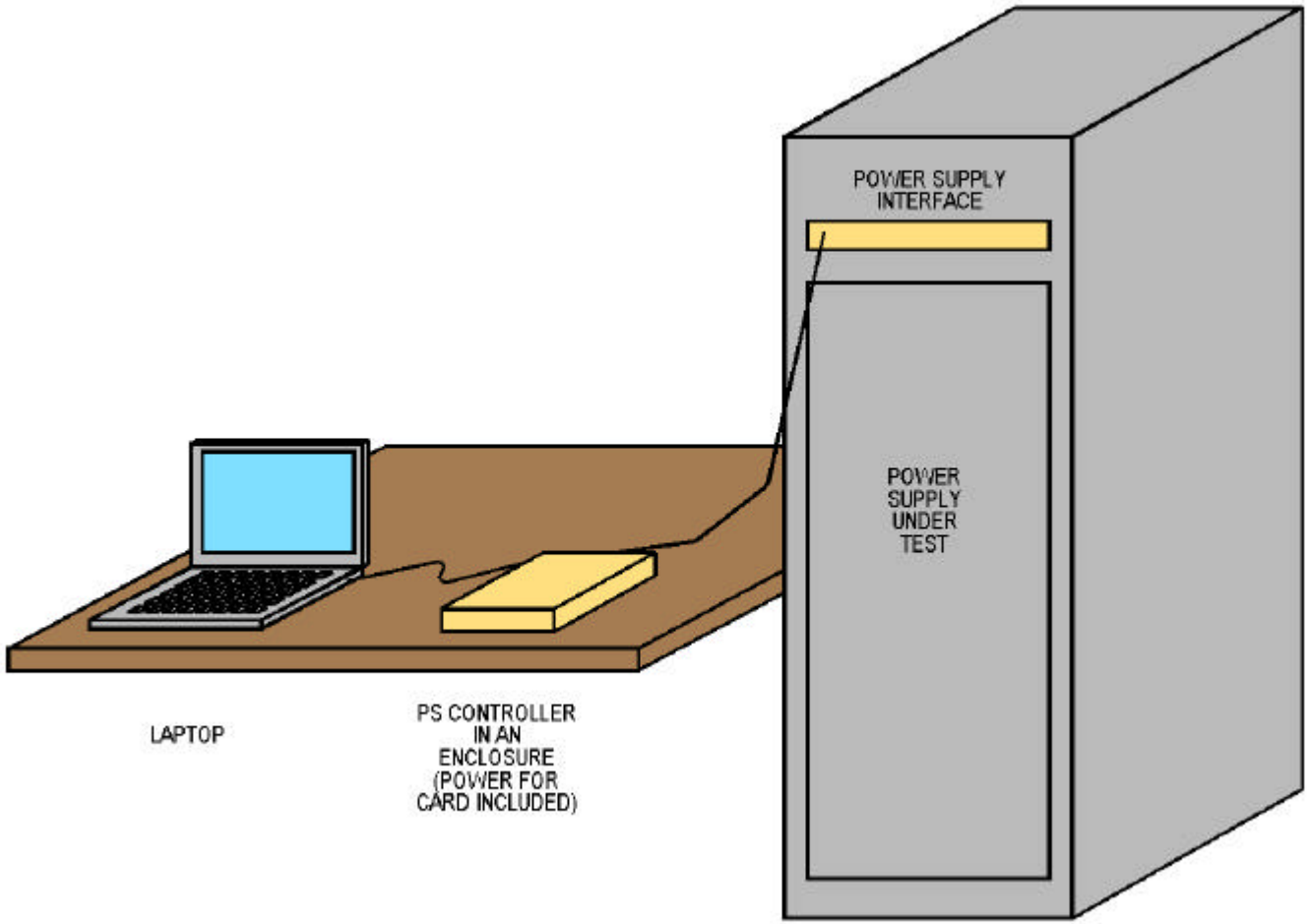

The Hardware

VME IOC with PSC Controlling a PSI

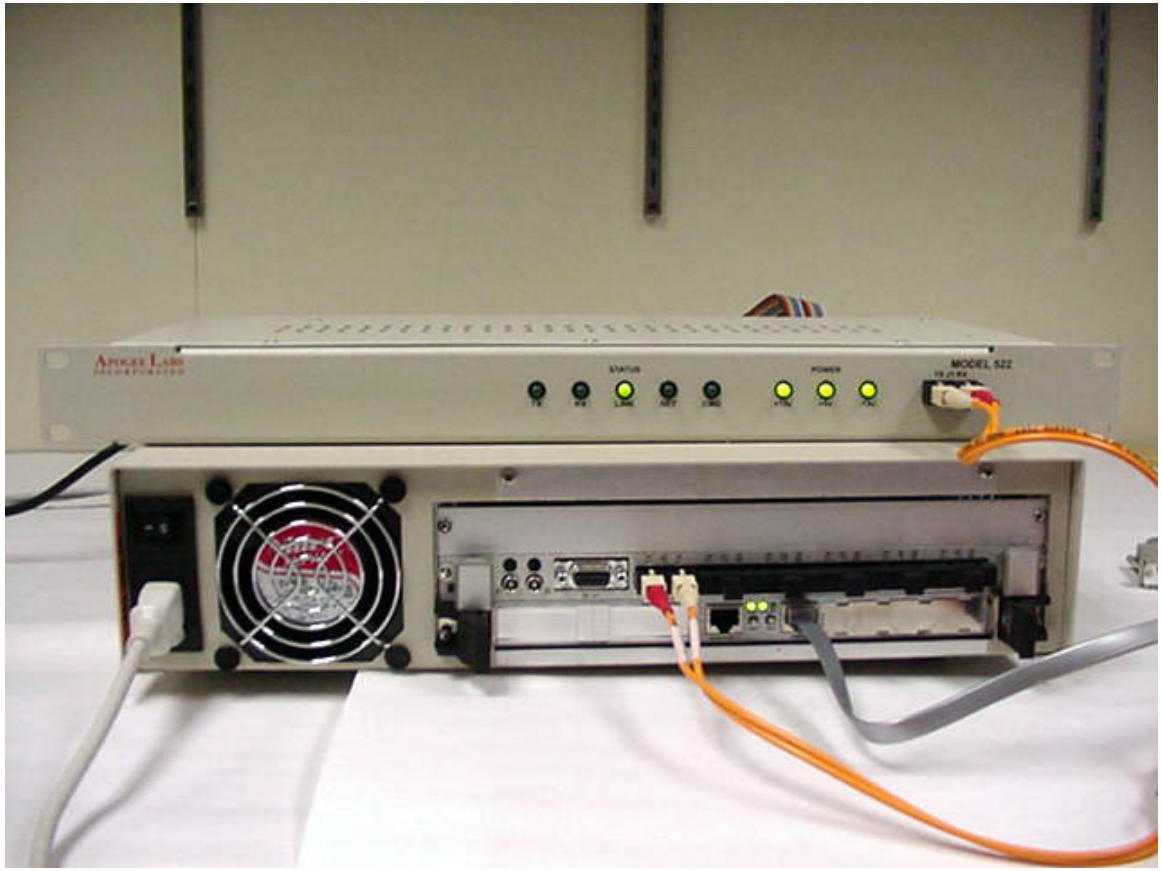

Full Capability – Uncluttered, Simple

Test Facility

Each VME

Has 4 PSC's

Each Rack

Has 24 PSI's

Why the PSI?
Systems Considerations - I

The power supply and controls can be self contained or integrated into the accelerator without changing hardware.

In the self contained configuration:

- The integration of the control system to the power supply can be tested long before beam time is desired.
- The power supply is tested at the power supply vendor's facility, further testing the interface, and making production testing easier and faster.
- Power supplies installed at SNS can be tested independent of / simultaneous to IOC or other high level control system testing.

In the integrated configuration:

- Additional units are easy to add or remove from the system. This is likely to happen with some correction power supplies.
- Control system fault isolation will be easier.

Why the PSI?
Systems Considerations - II

All power supplies look identical to the control system, and the control system looks identical to the power supplies.

For the power supply this means:

- Once manufacturers understand this interface, there is no confusion for all other type of power supplies they manufacture to be compatible with the PSI
- Power supplies of different types can be interchanged with the project or across projects.

For the control system this means:

- Configuration data bases (16 or 12 bit? How many channels?) are much simpler.
- Application software can be more standardized, reducing development time.

Why the PSI?
Features - I

Optical isolation is provided through a fiber interface:

- Eliminates accuracy errors inherent in analog isolation methods.
- Relieves the power supply manufacturer of providing any isolation. This results in lower power supply cost, and easier modifications of standard units.
- Power supply can be up to 2 km remote to the IOC. Eliminates need for IOC in remote areas.

Timed setpoints and reads:

- Timed readings let you know what the readbacks at a precise time. This also allows for waveform monitoring.
- Timed setpoints allow for slow waveform generation.

Glitch detection:

- The system goes down. What happened? Historical data is stored in a circular buffer.
- Response to power dip can be reviewed.

Why the PSI?
Features - II

Ripple / stability detection:

- Burst mode permits waveform monitoring of any readback.
- Coupled with the current error readback, provides a very good measurement of stability.

Data is correlated to beam pulse:

- Beam pulse number is “stamped” on data taken from that pulse.
- Historical data is identified by pulse.

Self monitoring:

- The PSI monitors for loss of carrier as would happen for a broken or disconnected fiber optic cable.
- A CRC test is used to detect bad data.

Interface Details
Analog

Analog input to PSI from the power supply:

- Four 16-bit channels, non-multiplexed.
- A/D converters are self calibrated at power up, and can be self calibrated at any time by the IOC.
- All signals are received differentially.

Analog output from the PSI to the power supply:

- One 16-bit channel.
- The signal is sent out differentially.

Cable:

- A separate analog cable containing shielded twisted pair cables isolate these signals from the digital signals.

Interface Details
Digital

Digital input to PSI from the power supply:

- Sixteen single status bits.
- Operate at 5 Volt TTL level to interface with the greatest number of power supplies, but are terminated in 1KÙ to reduce impedance to noise pickup.

Digital output from the PSI to the power supply:

- Fifteen single command bits. Only four defined for SNS use.
- Static or pulse mode.
- Operate at 5 Volt TTL level to interface with the greatest number of power supplies, but is designed to drive 1KÙ to reduce impedance to noise pickup.

Cable:

- A separate shielded digital cable isolate these signals from the analog signals.

Interface Details

PSI Front Panel LED Indicators

Power LEDs:

- +15 Volts, -15 Volts, +5 Volts.

Link LED:

- For the First 65 seconds, it will be dim indicating it is in Calibrate Mode.
- If connected to the PSC, the Link light will be on.

Tx and RX LEDs:

- RX LED indicates the PSI is receiving messages from the PSC.
- TX LED indicates the PSI is sending messages to the PSC.

Set and Cmd LEDs:

- Set LED indicates the PSI is receiving a setpoint from the PSC.
- Cmd LED indicates the PSI is receiving command bits from the PSC.

Configuration
Test Configuration

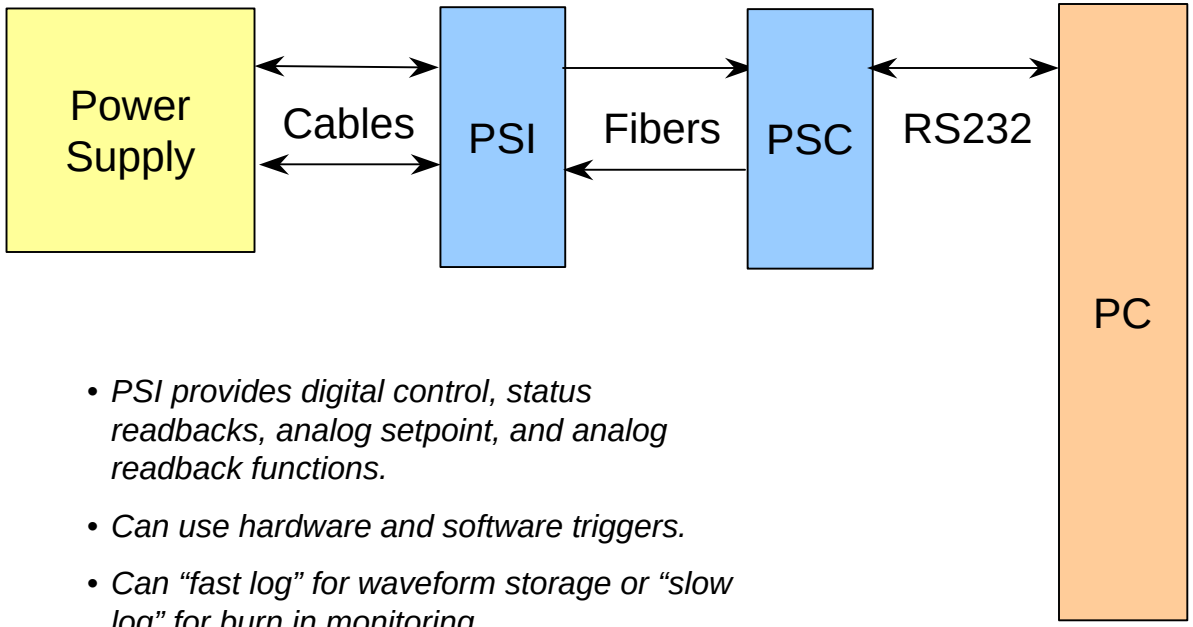

- *PSI provides digital control, status readbacks, analog setpoint, and analog readback functions.*
- *Can use hardware and software triggers.*
- *Can "fast log" for waveform storage or "slow log" for burn in monitoring.*

Configuration
DC Supplies

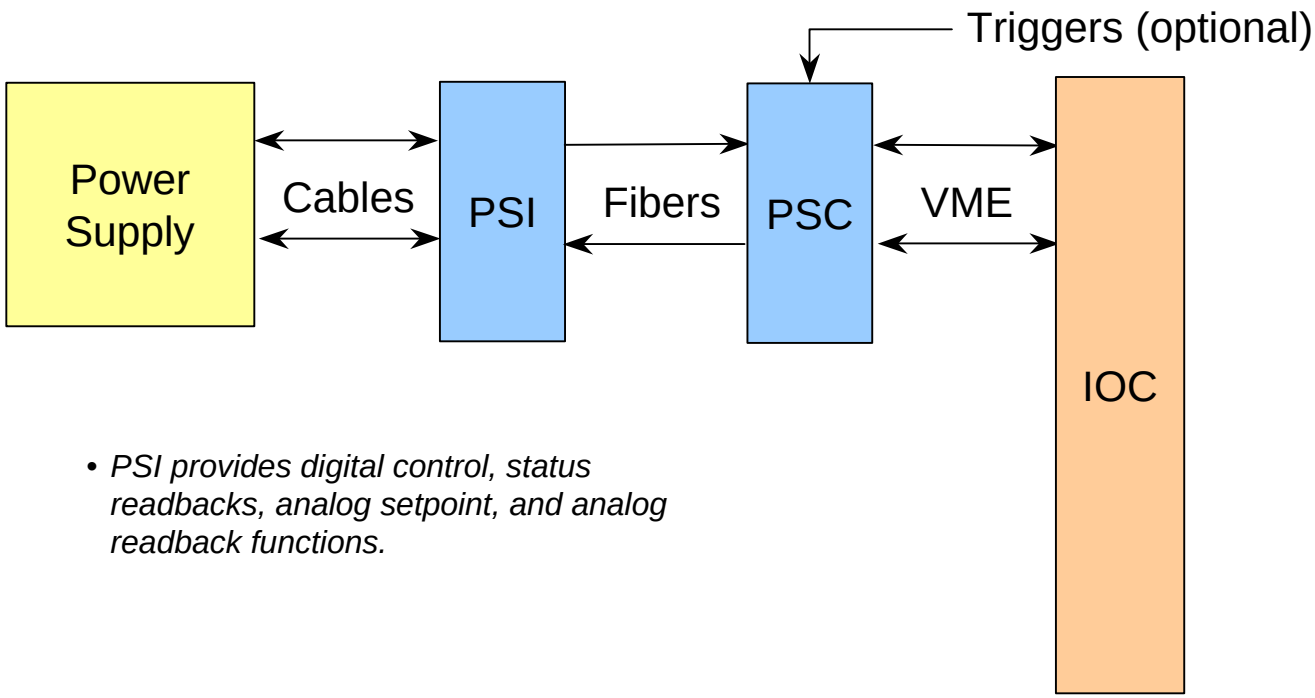

- *PSI provides digital control, status readbacks, analog setpoint, and analog readback functions.*

Configuration
Injection Kickers

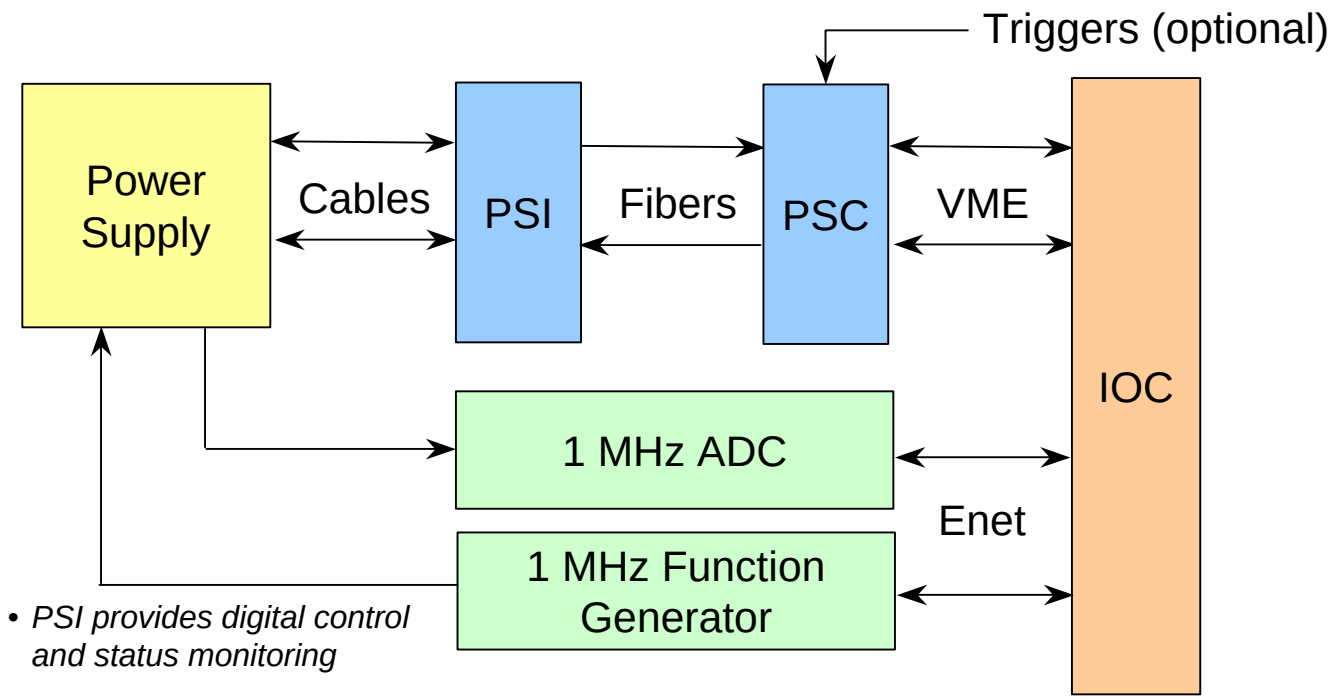

- *PSI provides digital control and status monitoring*
- *Waveshape determined by function generator.*

Configuration
Extraction Kickers

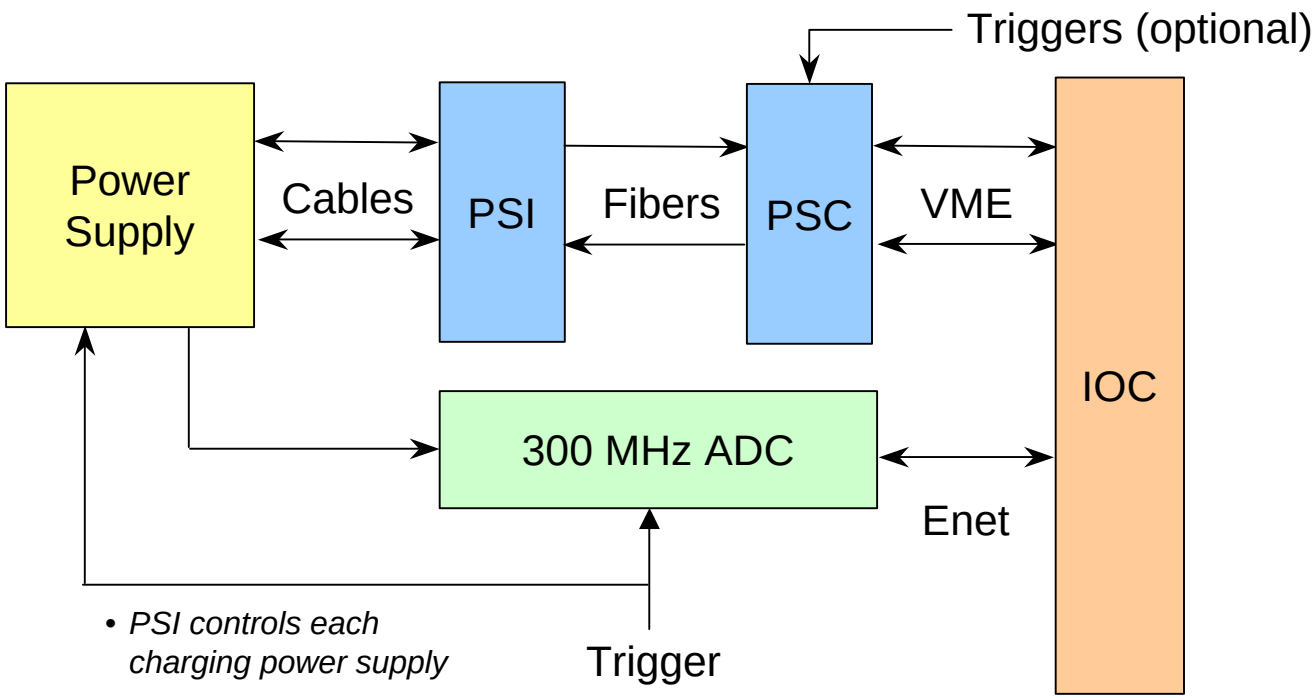

- *PSI controls each charging power supply*
- *Waveshape determined by PFN.*

PSC/PSI and RemOp

- Broad PS interface (16 status, 15 command bits)
- Optically isolated
- 4 digitized signals (up to 10 kHz)
  - Reference
  - Current
  - Voltage
  - Error

B-dah, b-dah, b-dah

That's all folks!