RHIC/RF-31

RHIC Project

BROOKHAVEN NATIONAL LABORATORY

RHIC/RF Technical Note No. 31

THE RHIC LOW - LEVEL RF FEEDBACK LOOP DESIGN

E. Onillon, J. M. Brennan

December 1995

The RHIC Low - Level RF Feedback Loop Design

E. Onillon, J. M. Brennan

Introduction

A state space representation can be used for the design of the RHIC Beam Control System, providing good stability. This note describes a model for the phase and radial loop, as well as for the synchronization loops between the two RHIC rings. Feedbacks, based on pole placement and linear quadratic regulator, are calculated trying to take into account the variations of the RF voltage and energy during the acceleration cycle.

1. Description of the system

1.1 Variables

The main variables used to describe the system are:

- φ_b the phase of the beam with respect to the RF
- φ the instantaneous phase deviation of the bunch from the synchronous phase
- $\delta\omega_b$ the variations of the beam frequency
- δR the variations of the beam radius
- φ_s the synchronous phase
- E the total energy
- V_{rf} the accelerating voltage
- φ_{rf} the RF phase
- ω_{rf} the RF frequency
- ξ the beam damping coefficient (all the calculations have been performed with $\xi = 0.01$).

The cavity, around which an RF feedback is closed, can be described by its pole s_c.

1.2 Beam transfer functions

Three transfer functions, B_φ, B_ω, B_R, are used to describe the beam [1]. They relate the changes in beam phase, frequency, and radius to the changes in frequency of the accelerating voltage:

$$\varphi = B_\varphi \delta\omega_{rf}$$
$$\delta\omega_b = B_\omega \delta\omega_{rf}$$
$$\delta R = B_R \delta\omega_{rf}$$

with: $B_\varphi = \dfrac{s}{s^2 + 2\xi\omega_s s + \omega_s^2}$, $B_\omega = \dfrac{\omega_s}{s^2 + 2\xi\omega_s s + \omega_s^2}$, $B_R = \dfrac{b}{s^2 + 2\xi\omega_s s + \omega_s^2}$ where $b = \dfrac{ceV_{rf}\cos\varphi_s}{2\pi\beta\gamma_{tr}E}$ and $\omega_s = f_\infty\sqrt{\dfrac{2\pi eV_{rf}\cos\varphi_s h|\eta|}{E}}$.

1.3 Schematic of the system

The system can be represented as follows:

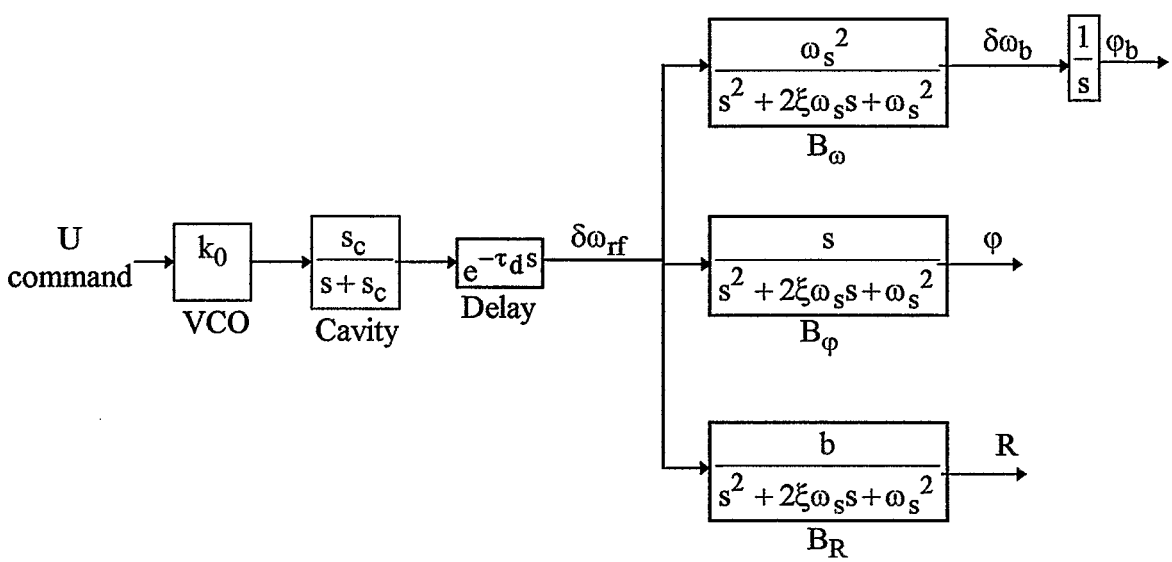

Fig.1 Model of the system

2. The phase and radial loop

2.1 State space representation

In a first approximation, we presume that the cavity transfer function is one, the beam damping term ξ is zero, and the delays of the system are neglected.

The subsystem to be represented is drawn in Fig. 2.

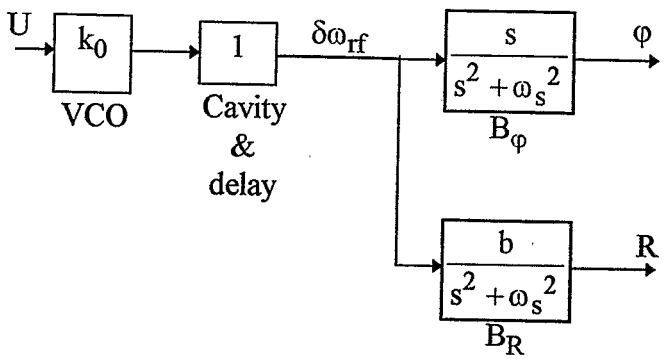

Fig. 2 Phase and radius subsystem

Two state variables are defined to describe the system: $\begin{cases} x_1 = \dfrac{R}{b} = \dfrac{k_0}{s^2+\omega_s^2}U \\ x_2 = \dot{x}_1 = \varphi \end{cases}$

Their evolution is given by: $\begin{cases} \dot{x}_1 = x_2 \\ \dot{x}_2 = -\omega_s^2 x_1 + U \end{cases}$

These equations lead to the matrix formalism: $\begin{pmatrix} \dot{x}_1 \\ \dot{x}_2 \end{pmatrix} = \begin{pmatrix} 0 & 1 \\ -\omega_s^2 & 0 \end{pmatrix}\begin{pmatrix} x_1 \\ x_2 \end{pmatrix} + \begin{pmatrix} 0 \\ k_0 \end{pmatrix}U$

Both the phase and the radius are observed: $\begin{pmatrix} \varphi \\ R \end{pmatrix} = \begin{pmatrix} 0 & 1 \\ b & 0 \end{pmatrix}\begin{pmatrix} x_1 \\ x_2 \end{pmatrix}$

As we want the radius to follow the radial steering, the difference between the radius and its reference R_0 is integrated. A third state variable corresponding to this integral is introduced: $x_3 = z = \int(R - R_0)dt$ [2]. As a result, $\dot{x}_3 = R - R_0 = \frac{1}{b}x_1 - R_0$.
We get the final state space representation:

$$\begin{cases} \begin{pmatrix} \dot{x}_1 \\ \dot{x}_2 \\ \dot{x}_3 \end{pmatrix} = \underbrace{\begin{pmatrix} 0 & 1 & 0 \\ -\omega_s^2 & 0 & 0 \\ b & 0 & 0 \end{pmatrix}}_{A_{\varphi R}}\underbrace{\begin{pmatrix} x_1 \\ x_2 \\ x_3 \end{pmatrix}}_{X_{\varphi R}} + \underbrace{\begin{pmatrix} 0 \\ k_0 \\ 0 \end{pmatrix}}_{B_{\varphi R}}U + \begin{pmatrix} 0 \\ 0 \\ -R_0 \end{pmatrix} \\ \begin{pmatrix} \varphi_b \\ R \end{pmatrix} = \underbrace{\begin{pmatrix} 0 & 1 & 0 \\ b & 0 & 0 \end{pmatrix}}_{C_{\varphi R}}\begin{pmatrix} x_1 \\ x_2 \\ x_3 \end{pmatrix} \end{cases}$$

As the rank of the matrix $\left[B_{\varphi R}\ A_{\varphi R}B_{\varphi R}\ A_{\varphi R}^2 B_{\varphi R}\right]$ is 3, it is possible to determine a feedback using pole placement [2].

Calculations are done using Matlab™.

An analytical expression has been found for the feedback gains. If l_1, l_2 and l_3 are the desired poles, the three state gains are:
$$\begin{cases} k_R = (l_1 l_2 + l_1 l_3 + l_2 l_3 - \omega_s^2)/(bk_0) \\ k_\varphi = -(l_1 + l_2 + l_3)/k_0 \\ k_\int = -(l_1 + l_2 + l_3)/(bk_0) \end{cases}$$

The command is a linear combination of the three state variables: $U = -k_R x_1 - k_\varphi x_2 - k_\int x_3$. A closed loop schematic used for simulations is given on Fig. 3. As the opposite of the feedback gain calculation, simulations are performed with the cavity delay, the damping term and the cavity pole.

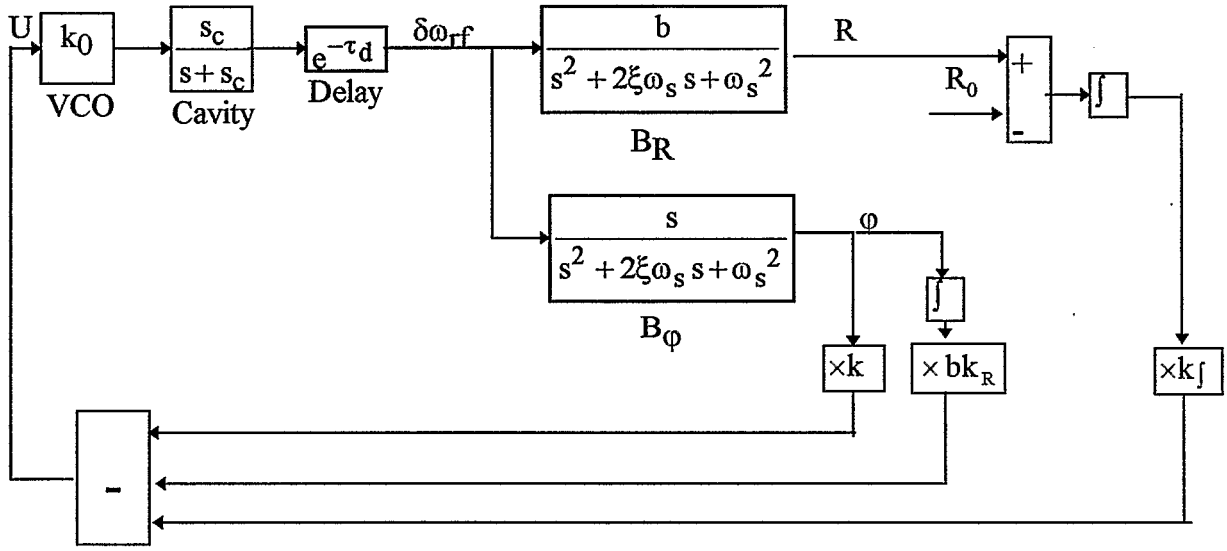

Fig. 3 Phase and radial loop

The radius path is replaced by a path on the integral of the phase, which is proportional to the radius: $\varphi = \frac{R}{b}$. k_φ, $k_{\int\varphi} = bk_R$, $k_\int$ respectively represent the gain on the phase, on the phase integral and on the integral of the difference between the radius and its reference. These gains are a function of the energy E and the RF voltage V_{rf}. They will be programmed as a function of ω_s. The integral of the phase is used instead of the radius to avoid transient at transition and to give the system a good damping of the phase jump.

2.2 Simulations

The following results have been obtained with the three following desired poles: $-139 + j*139$, $-139 - j*139$, -28283.
The reference is a 1 mm radius step.

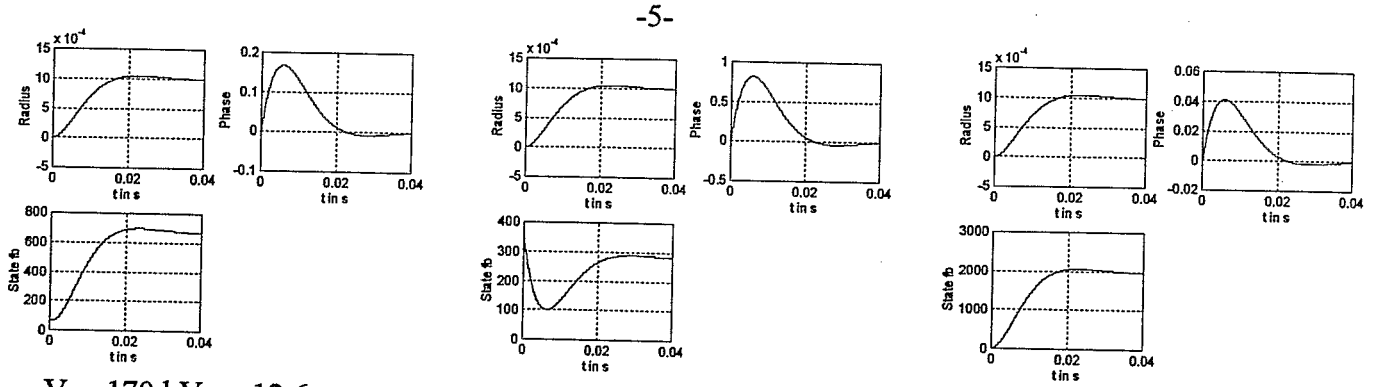

V_{rf}=170 kV, γ=12.6 V_{rf}=300 kV, γ=108.4 V_{rf}=6000 kV, γ=108.4

Fig. 4 Radius step response

The radius reaches its final value and the phase goes back to zero in roughly 40 ms in all three cases. The corresponding Bode plots are given in Fig.5.

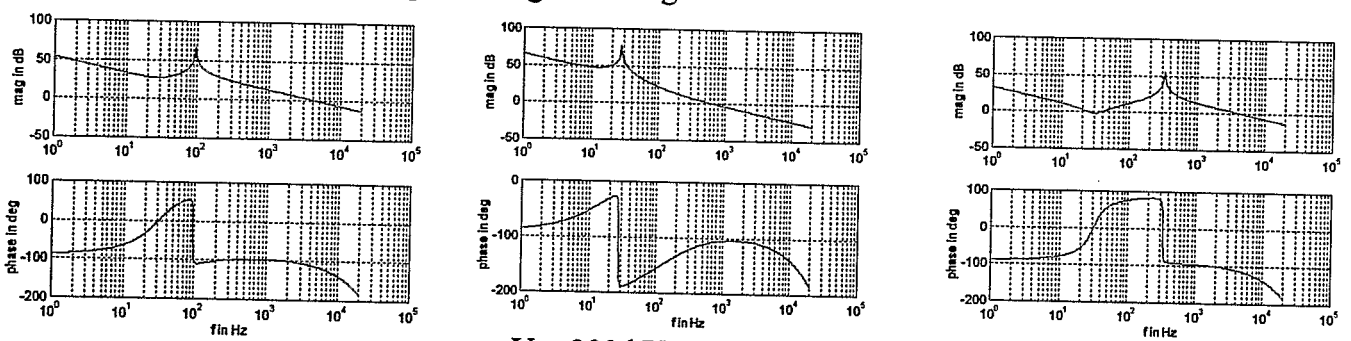

V_{rf}=170 kV, γ=12.6 V_{rf}=300 kV, γ=108.4 V_{rf}=6000 kV, γ=108.4

Fig. 5 Open loop Bode plots

In all cases, the phase margin is 70°, the amplitude margin 15 dB and the cut off frequency approximately 3.2 kHz.

2.3 Transition

The response of the loop, as shown in Fig. 6a, stays the same at transition where ω_S is equal to zero (raise time ≅ 40 ms). The Bode plot is modified, since ω_S = 0 (phase margin 80°, amplitude margin 10 dB, cut off frequency 3 kHz).

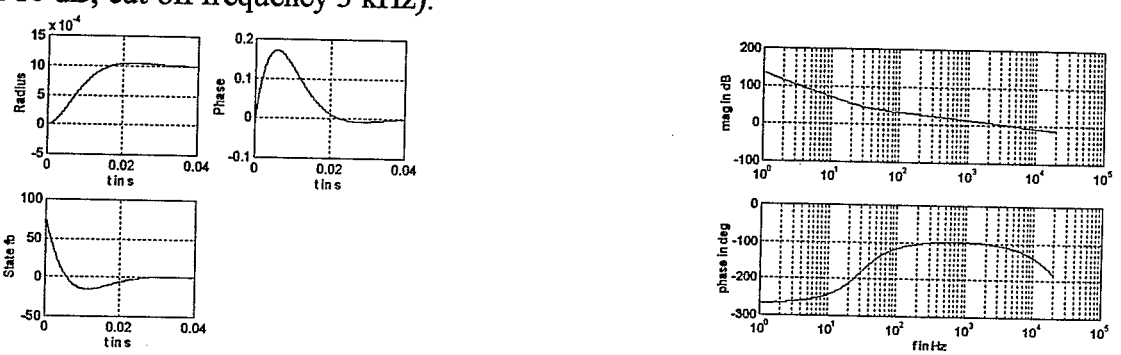

Fig. 6a Loop behavior at transition (step response and Bode plot)

The transition jump can be simulated by adding a 180° phase perturbation on the phase. The transfer function between ω_{rf} and R has to be made equal to zero, the transition jump having no effect on the radius (Fig. 6b). After jumping to π, the phase comes back to zero in less than 100μs.

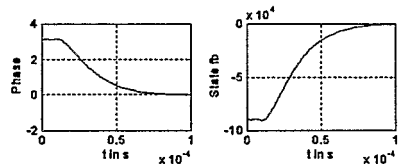

Fig. 6b Transition phase jump

3. The synchronization loop

3.1 Description of the system

This feedback system is used to synchronize the two RHIC rings. A new variable is introduced: the phase of the beam φ_b (Fig. 7).

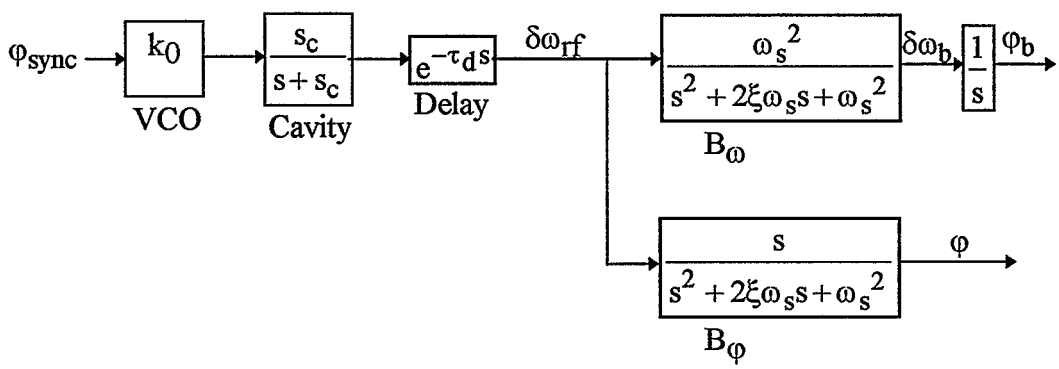

Fig. 7 Schematic of the system

3.2 State space representation

As previously indicated, to establish this representation, we suppose that the cavity transfer function is one, the beam damping term and the system delay zero.
The subsystem to be represented is then the following:

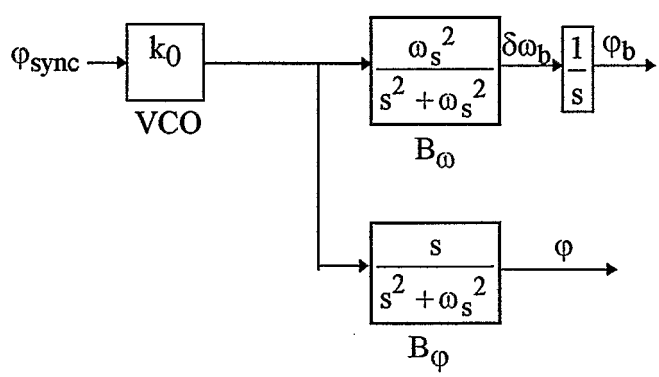

Fig. 8 Simplified schematic

The command of the synchronization loop is φ_{sync}. Three state variables are sufficient to describe this system: the phase and the frequency of the beam, and the bunch to bucket phase. The state vector is therefore $X_s = \begin{bmatrix} x_4 = \varphi_b \\ x_5 = \omega_b \\ x_6 = \varphi \end{bmatrix}$. Both of these variables are observed. As a result, the observation vector is therefore $Y_s = \begin{bmatrix} x_4 = \varphi_b \\ x_5 = \omega_b \\ x_6 = \varphi \end{bmatrix}$.

From this model, it comes out: $\begin{cases} \dot{x}_4 = x_5 \\ \dot{x}_5 = \omega_s^2 x_6 \\ \dot{x}_6 = -\omega_s^2 x_6 + k_0 \varphi_{sync} \end{cases}$.

Finally, we derive the following state space representation:

$$\begin{cases} \dot{X}_s = \underbrace{\begin{pmatrix} 0 & 1 & 0 \\ 0 & 0 & \omega_s^2 \\ 0 & -1 & 0 \end{pmatrix}}_{A_s} X_s + \underbrace{\begin{pmatrix} 0 \\ 0 \\ k_0 \end{pmatrix}}_{B_s} \varphi_{sync} \\ Y_s = \begin{pmatrix} 1 & 0 & 0 \\ 0 & 1 & 0 \\ 0 & 0 & 1 \end{pmatrix} X_s \end{cases}$$

As the rank of the matrix $\left[B_s \; A_s B_s \; A_s^2 B_s\right]$ is 3, we can again determine a feedback using pole placement.

Calculations are done using Matlab™. The command U of the system will be the difference between the reference signal and a linear combination of the three state variables. A simulation schematic is given on Fig. 9. The reference is introduced at the level of φ_b to force φ_b to follow it. Simulations, contrary to the feedback gain calculations, are run with the cavity delay, the cavity transfer function and the beam damping term.

If l_1, l_2, l_3 are the desired poles, the thrree state gains are given by: $\begin{cases} k_{\varphi_b} = -\dfrac{l_1 l_2 l_3}{k_0 \omega_s^2} \\ k_{\omega_b} = \dfrac{l_1 l_2 + l_1 l_3 + l_2 l_3}{k_0 \omega_s^2} \\ k_{\varphi} = \dfrac{l_1 + l_2 + l_3}{k_0} \end{cases}$

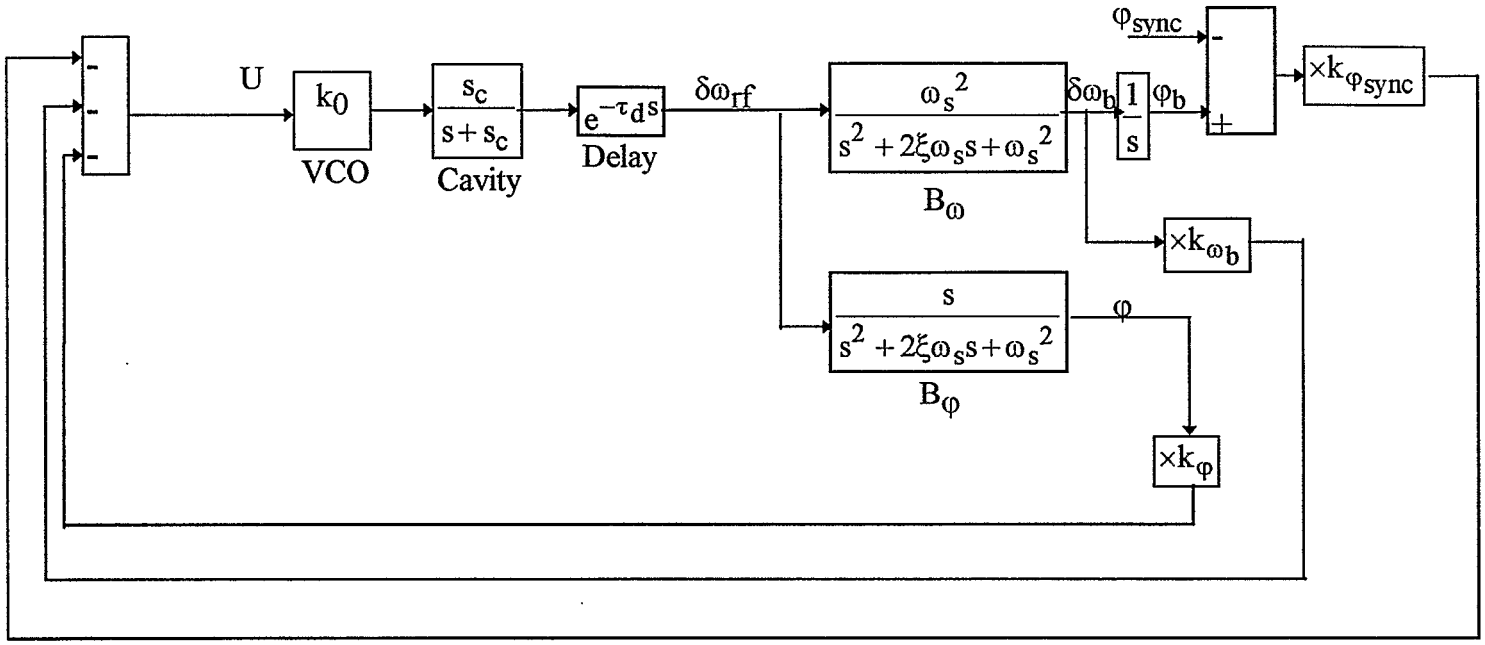

Fig. 9 Synchronization loop

3.3 Simulations

The feedback coefficients of the synchronization loop have been calculated with the following desired poles: -99638, $-1202+j*1047$, $-1202-j*1047$ during acceleration and -220.3, -1469, -9442 during storage.

The command is one radian step.

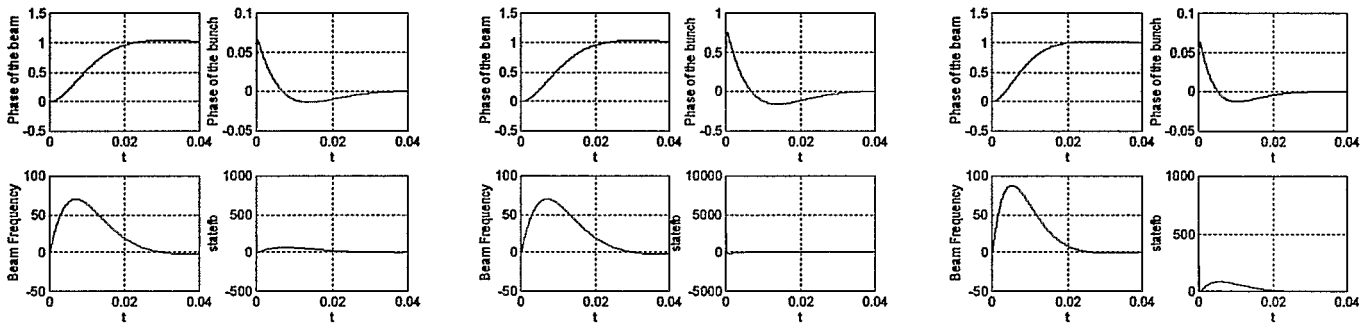

V_{rf}=170 kV, γ=12.6 V_{rf}=300 kV, γ=108.4 V_{rf}=6000 kV, γ=108.4

Fig. 10 Step response of the synchronization loop

In all cases, the raise time is roughly 20ms. The corresponding open loop Bode plots (loop opened at the level of the command U) are given in Fig. 11.

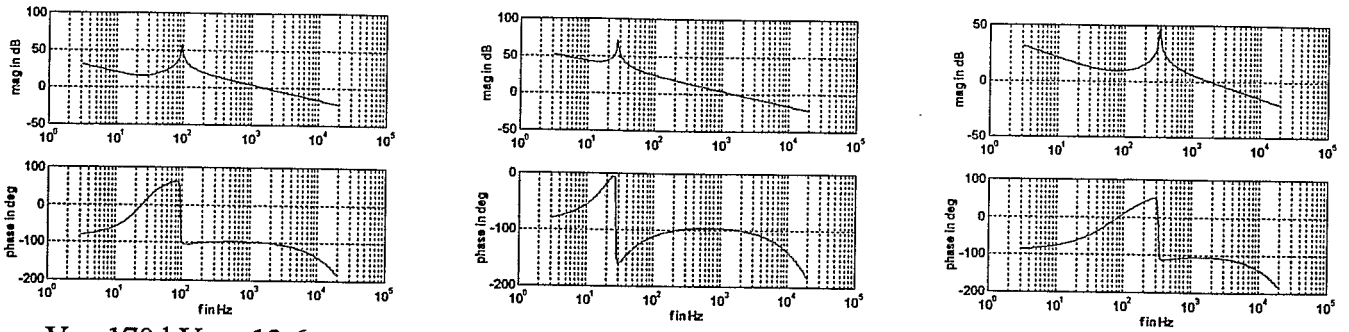

V_{rf}=170 kV, γ=12.6 V_{rf}=300 kV, γ=108.4 V_{rf}=6000 kV, γ=108.4

Fig. 11 Open loop Bode plots

In the three cases, the phase margin is 80°, the amplitude margin 20 dB and the cut off frequency 1.5 kHz.

The feedback can not be calculated at transition. Since ω_s=0, B_ω is equal to 0 and B_φ to $\frac{1}{s}$. The beam frequency is not defined and the bunch to bucket phase integrates the RF frequency.

4. Phase error for a given frequency error

4.1 Phase Measurement Errors

The system is excited by a white noise on the phase detector output to simulate phase measurement errors. Its amplitude is 90 and its bandwidth 5000 Hz.

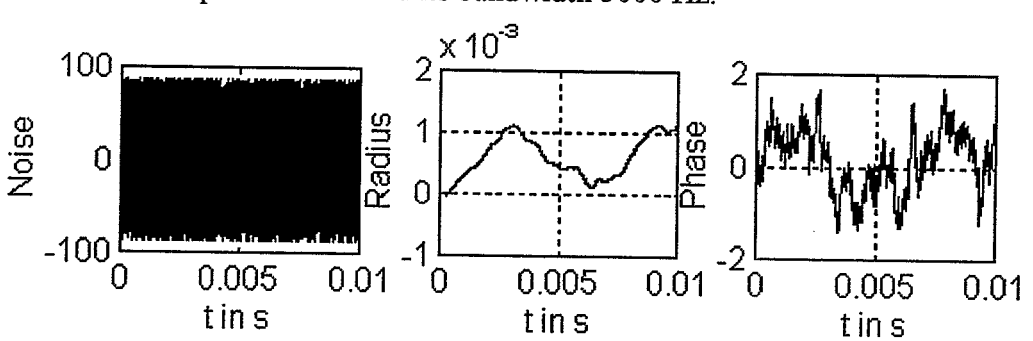

Fig. 12 System excited by a white noise

The feedback tries to keep the phase and the radius at zero. The noise is attenuated by a factor of 40. This can be seen in Fig. 13, where the power spectrums of the white noise and of the phase are plotted.

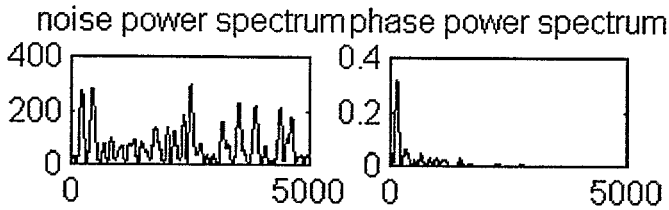

Fig. 13 Noise and phase power spectrums

4.2 Effects of the tuner on the phase and radial loop.

The tuner effect can be seen as rf phase steps. These can be simulated by adding the derivative of a series of steps on the rf frequency, as shown in Fig. 14.

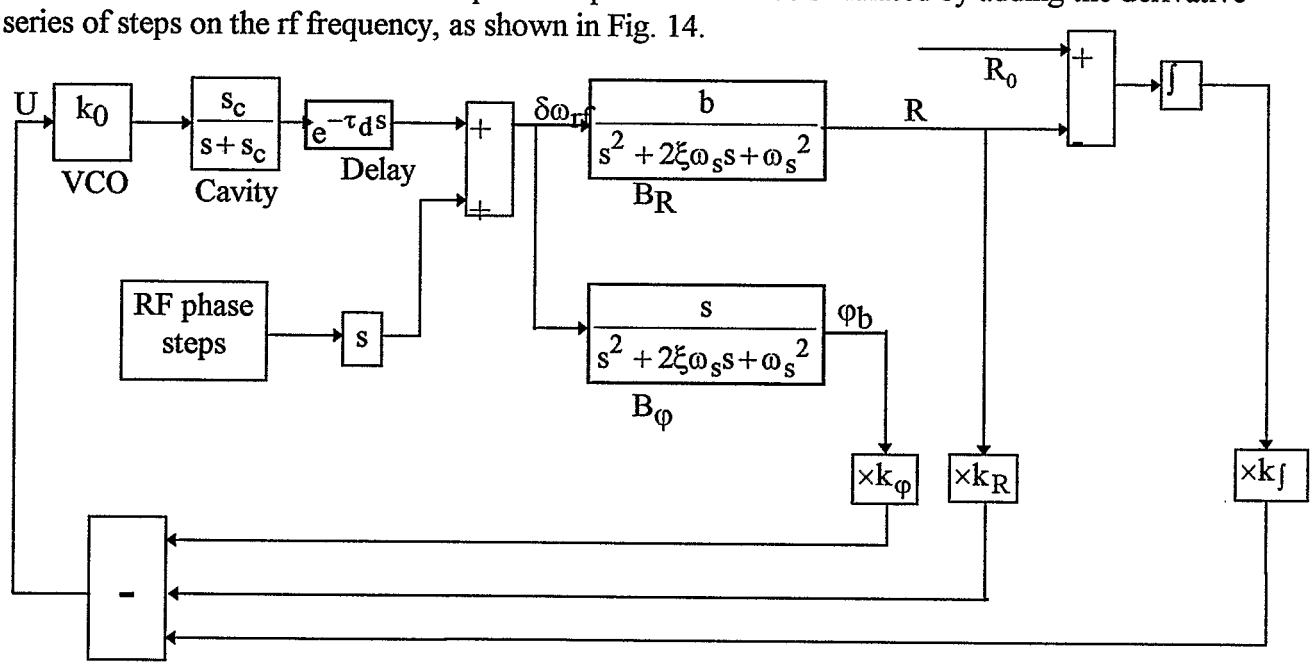

Fig. 14 Simulation method of the tuner effects on the phase and radial loop

The same simulation has been performed by using a real RF phase measurements. Both results are shown in Fig. 15.

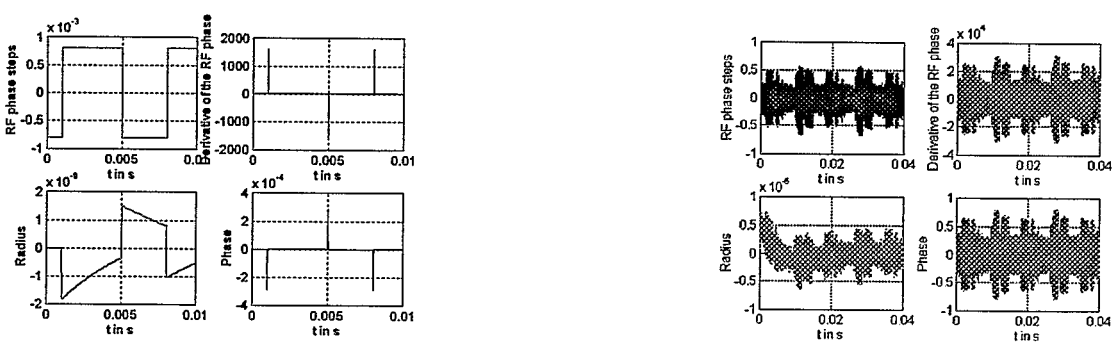

Fig. 15 Effects of the tuner

When a step occurs on the rf phase, the feedback tries first to bring the phase to zero. The radius integers the step, making the phase deviates. If the closed loop transfer function between the

radius and the rf phase φ_{rf} is F(s), the closed loop transfer function between the phase φ and φ_{rf} is $s\frac{F(s)}{b}$. That means that the area a(t) under the phase curve, $a(t)=\int_0^t \varphi(u)du$, is proportional to the radius. The perturbations due to the tuner can be seen as radius steps on the radius. The system will then answer with the dynamic of the phase and radial loop.

5. Discrete Realization of the loops

Given the analog state space representation of the subsystems described previously, it is possible to obtain a discrete state space representation which includes the delay τ_d assuming a zero-order hold on the inputs and a sampling period τ_d corresponding to the revolution period. The continuous time state space system $\dot{x}=Ax+BU$ is converted to the discrete-time system $x(n+1)=a_d x(n)+b_d U(n)$ supposing the control inputs are piecewise constant over the sample time [3]. This calculation is done numerically using Matlab™.

5.1 The phase and radial loop

If we exclude the analog integral action, the order of the obtained discrete state matrix is three. A fourth state variable, corresponding to the discrete integral of the difference between the radius and its reference R_0, is added.

If the original state space-representation obtained previously is

$\begin{cases} x(n+1)=a_d x(n)+b_d U(n) \\ Y(n+1)=c_d x(n)+d_d U(n) \end{cases}$ such that $R(n+1)=C_{d2}x(n)$ with $x(n)=\begin{pmatrix} \frac{R(n)}{b} \\ \varphi(n) \\ U(n-1) \end{pmatrix}$, the complete state space representation is

$$\begin{cases} \underbrace{\begin{pmatrix} x(n+1) \\ z(n+1) \end{pmatrix}}_{X(n+1)} = \begin{pmatrix} a_d & 0 \\ c_{d2} & 1 \end{pmatrix} \underbrace{\begin{pmatrix} x(n) \\ z(n) \end{pmatrix}}_{X(n)} + \begin{pmatrix} b_d \\ 0 \end{pmatrix} U(n) + \begin{pmatrix} 0 \\ -R_0 \end{pmatrix} \\ Y(n+1)=\begin{pmatrix} c_d & 0 \end{pmatrix} X(n) \end{cases}$$

A pole placement feedback can be determined. The poles are derived from the continuous case, using the transformation discret pole $= e^{\text{continuous pole}*\tau_d}$ [3]. Again, the command U of the system will be a linear combination of the four state variables, as shown in Fig. 16.

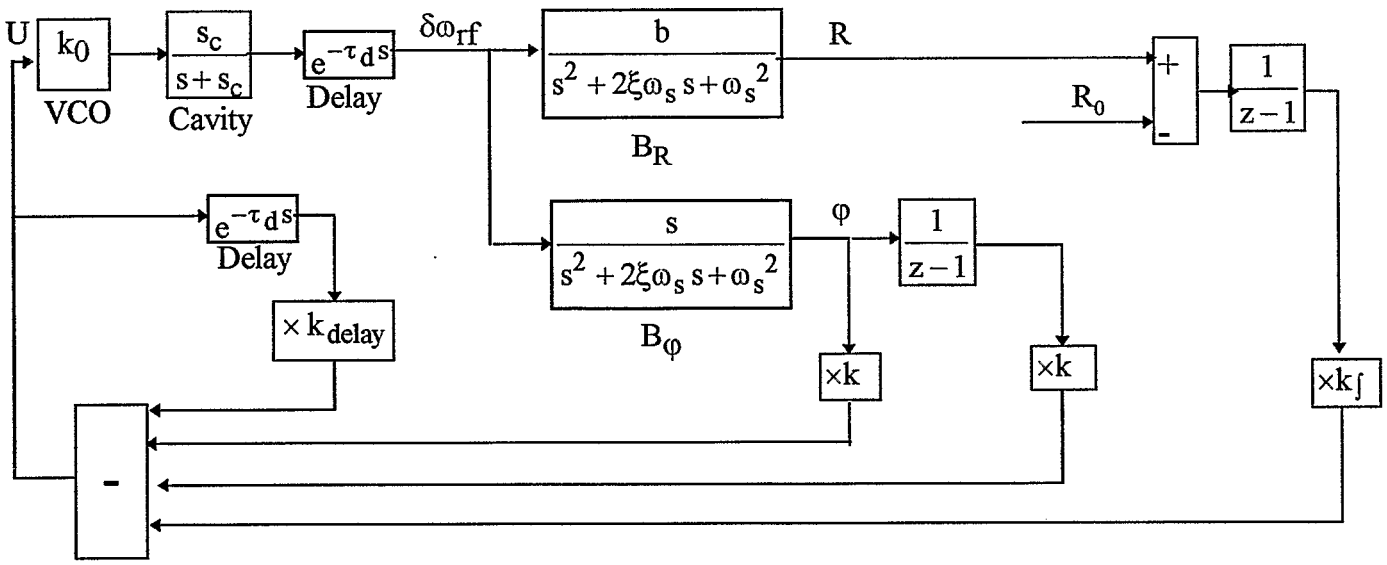

Fig. 16 Discrete realization of the phase and radial loop

A path with a delay of τ_d has been added to build the third state variable U(n-1). The radius, to avoid transition problems, is again built from the phase.

Results of simulations are given in Fig. 17. The radius reference is a step.

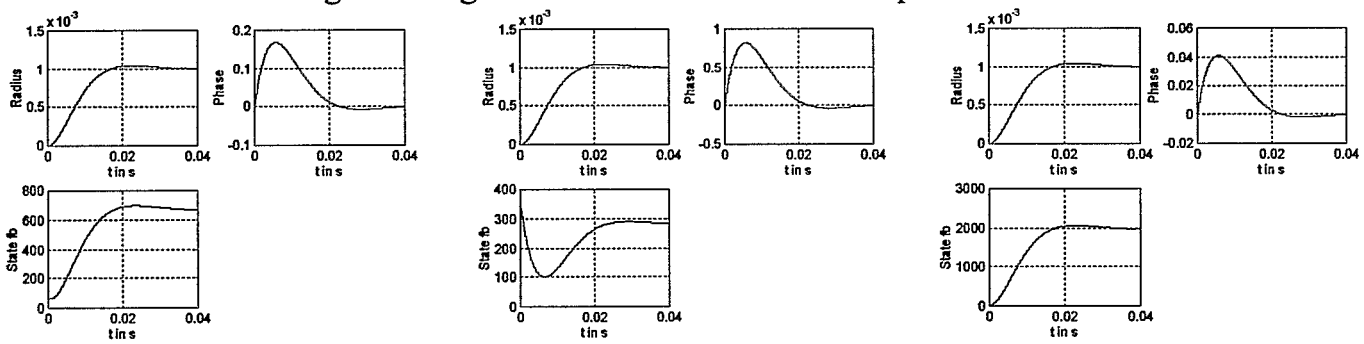

V_{rf}=170 kV, γ=12.6 V_{rf}=300 kV, γ=108.4 V_{rf}=6000 kV, γ=108.4

Fig.17 Radius step response

Results are similar to the continuous results.

The corresponding Bode plots are given in Fig. 18.

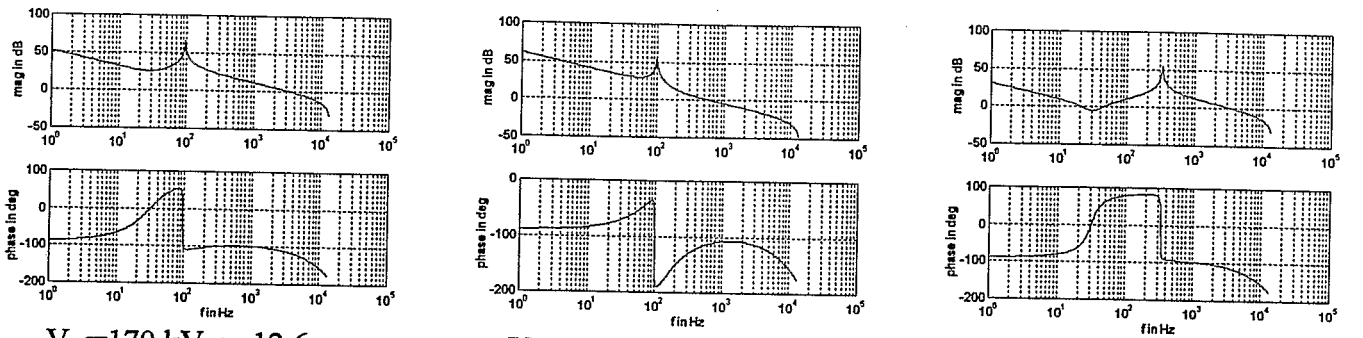

V_{rf}=170 kV, γ=12.6 V_{rf}=300 kV, γ=108.4 V_{rf}=6000 kV, γ=108.4

Fig. 18 Open loop Bode plots

As for the continuous case, in all situations, the phase margin is 70°, the amplitude margin 15 dB and the cut off frequency approximately 3.2 kHz.

The response of the loop, as shown in Fig. 19a, stays the same at transition where ω_s is equal to zero (raise time ≅ 20 ms). The Bode plot is modified, since $\omega_s = 0$ (phase margin 80°, amplitude margin 10 dB, cut off frequency 3 kHz).

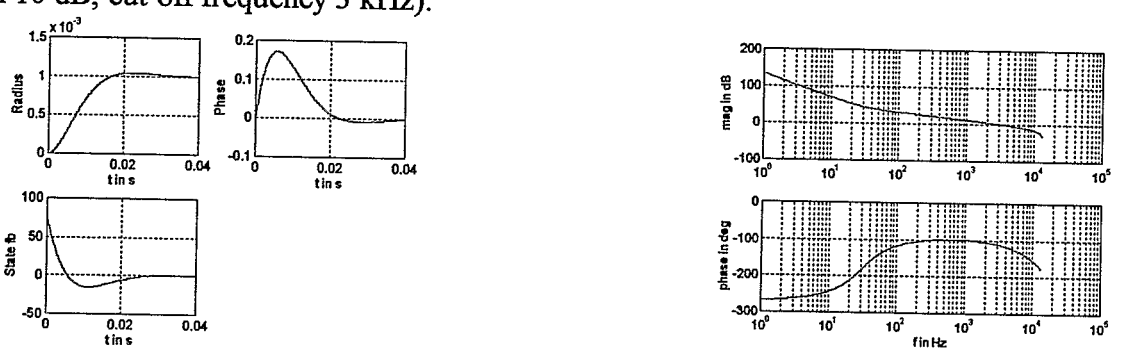

Fig. 19a Loop behavior at transition (step response and Bode plot)

The transition jump is, as in the continuous case, simulated by adding a 180° phase perturbation on the phase. The transfer function between ω_{rf} and R has to be made equal to zero, the transition jump having no effect on the radius (Fig. 19b). After jumping to π, the phase comes back to zero in less than 100ms. The effect of sampling at τ_d is visible on the plots.

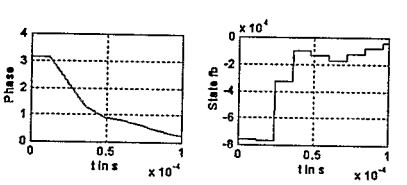

Fig. 19b Transition jump

5.2 The synchronization loop

The discrete state vector is $X(n) = \left(\varphi_b \quad \omega_b \quad \varphi \quad U(n-1)\right)^T$. A feedback using pole placement can be found using the same method as for the phase and radial loop. The schematic of the loop is given in Fig. 20.

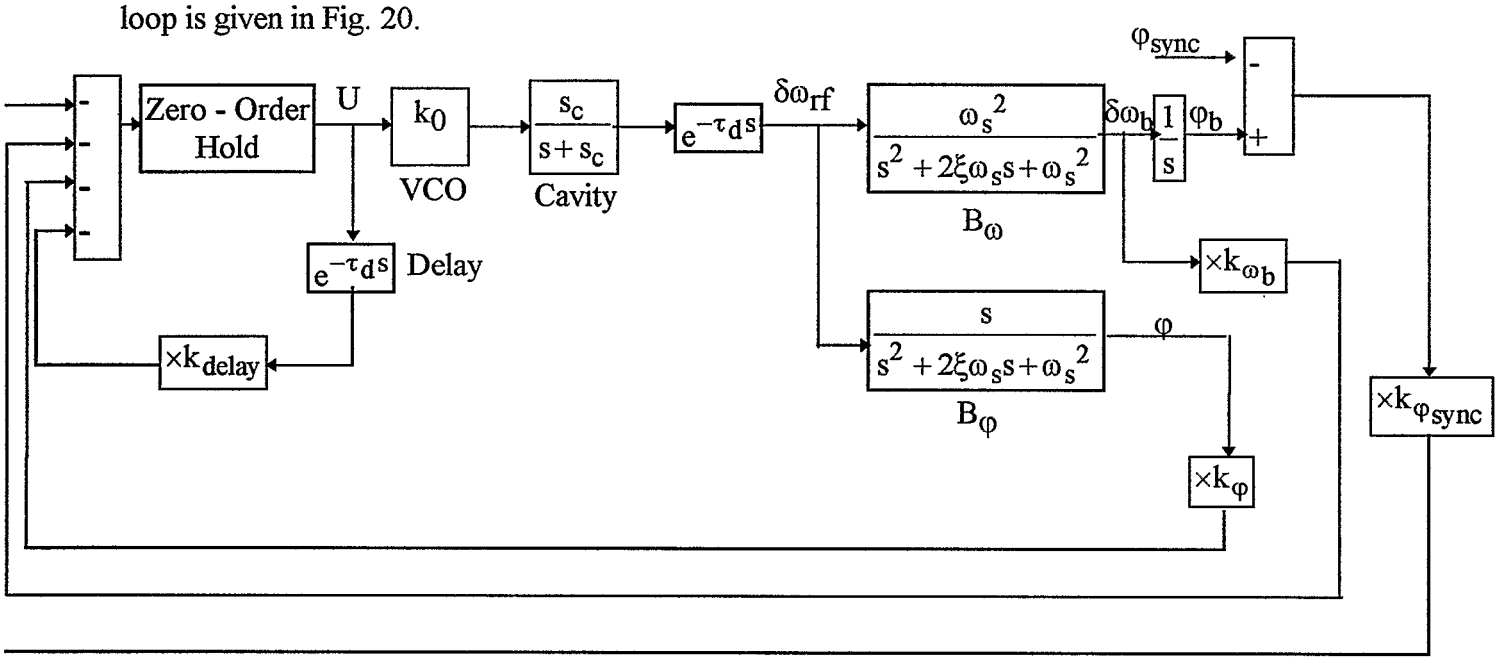

Fig. 20 Discrete realization of the synchronization loop

Again, a path with a delay has been added to build U(n-1). Results of simulations are given in Fig. 21 (step excitation) and Fig. 22 (ramp excitation).

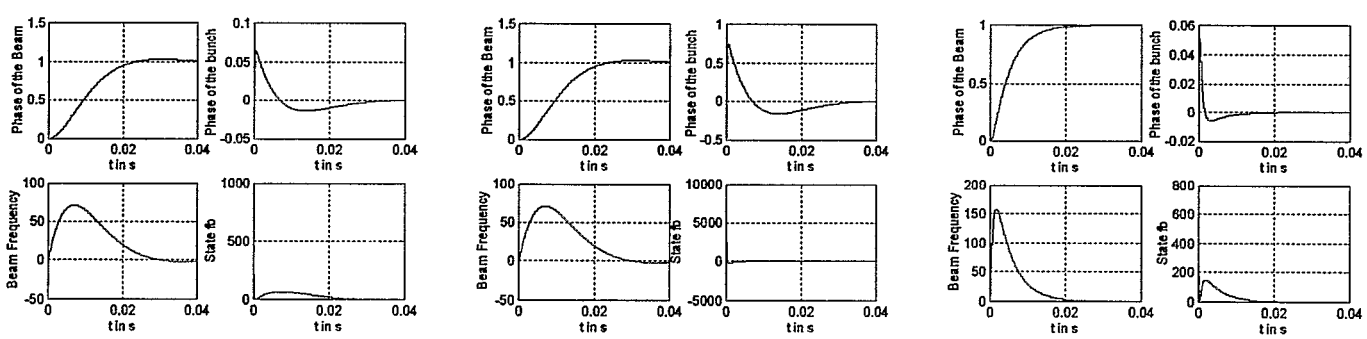

V_{rf}=170 kV, γ=12.6 V_{rf}=300 kV, γ=108.4 V_{rf}=6000 kV, γ=108.4

Fig. 21 Step response of the discrete synchronization loop

In all three cases, the rise time is 20 ms.

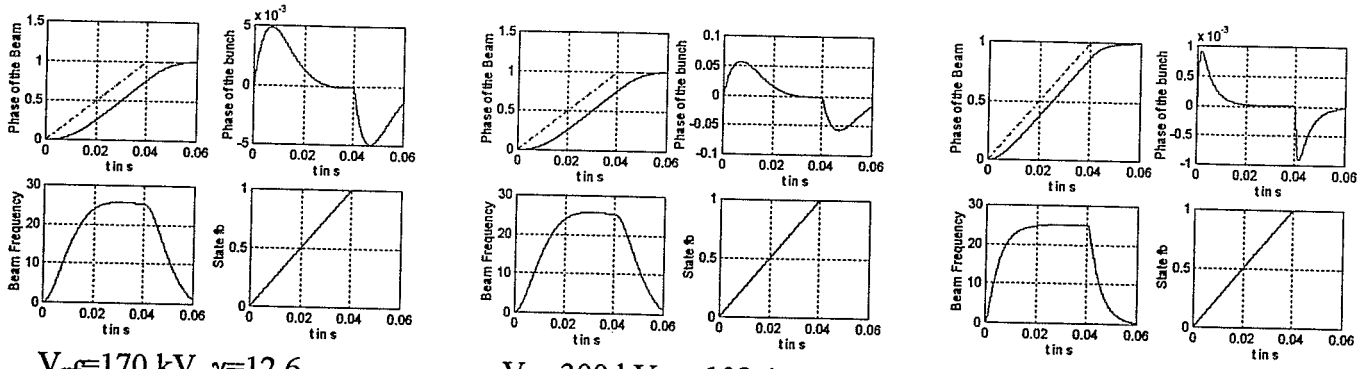

V_{rf}=170 kV, γ=12.6 V_{rf}=300 kV, γ=108.4 V_{rf}=6000 kV, γ=108.4

Fig. 22 Response to a ramp of the discrete synchronization loop

The phase of the beam is lagging. The ramp reaches its final value in 40 ms and the phase of the beam in 60 ms. This could be overpassed by adding a double integration on $\varphi_b^{\cdot} - \varphi_{sync}$. The corresponding open loop Bode plots (loop opened at the level of the command U) are given in Fig. 23.

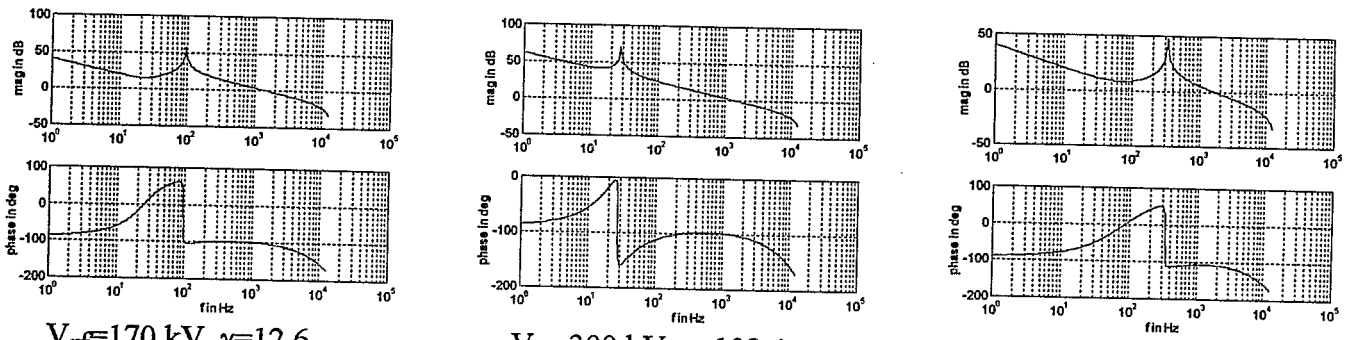

V_{rf}=170 kV, γ=12.6 V_{rf}=300 kV, γ=108.4 V_{rf}=6000 kV, γ=108.4

Fig. 23 Open loop Bode plots

As in the continuous case, in all three situations, the phase margin is 80°, the amplitude margin 20 dB and the cut off frequency 1.5 kHz.

Conclusion

The use of a state space representation leads to the design of two feedback loops. These loops provide us with good stability, a good robustness and performance, despite the system delays, whether the analog or the discrete approaches are used. The practical realization only requires gains and summations. The analog feedback loop will be tested on the AGS.

Appendix: Parameter definitions and values [4]

Constant parameters

c	Speed of light	$3\ 10^8$ m/s
γ_{tr}	Value of γ at transition	22.8
circ	Machine circumference	3833 m
τ_d	Cavity delay	12 µs
f_∞	c / circ	$7.8268\ 10^4$ Hz

Variable parameters

		Injection	High energy	Storage
φ_s	Synchronous phase	0	0	0
β	Speed of the particle/c	1	1	1
γ	Total energy/Rest energy	12.6	108.4	108.4
η	$1/\gamma_{tr}2-1/1/\gamma2$;			
h	Harmonic number	366	366	7*366
eV_{rf}	RF Voltage*charge of the ion	170 kV*79	300 kV*79	6000 kV*79

References

[1] RF Beam Control System for the AGS Booster, J. M. Brennan, BNL - 52438 Formal Report

[2] Feedback Control of Dynamic Systems, G. F. Franklin, J. D. Powell, Addison-Wesley Publishing Company

[3] Digital Control of Dynamic Systems, G. F. Franklin, J. D. Powell, Addison-Wesley Publishing Company

[4] The Conceptual Design of the RHIC RF System, RHIC Report

Files

Fig. 4	datrhic9&boucrhic
Fig. 5	datrhic6
Fig. 9	synchro9&rhisync3
Fig. 10	synchr10
Fig. 14	datrhic8&boucrhi2
Fig. 16	datdisi&dboucrin
Fig. 17	datbode&datbodd
Fig. 19	dsync&dsyncd&dsyncdr
Fig. 20	datbods&datbodds