RHIC/RF-25

RHIC Project

BROOKHAVEN NATIONAL LABORATORY

RHIC/RF Technical Note No. 25

HOM DAMPER FOR RHIC 26.7 MHz ACCELERATING SYSTEM

S. Kwiatkowski
J. Brodowski
J. Rose

January 1995

HOM DAMPER FOR THE 26.7 MHz RHIC ACCELERATING SYSTEM.

S.Kwiatkowski

INTRODUCTION.

The purpose of this work was to find the simple and effective method to damp the High Orders Modes (HOM) in the 26.7 MHz RHIC accelerating cavity. Several different approaches have been considered:

1.Capacitively coupled notch filter terminated into 50Ω load.
2.Inductively coupled notch filter terminated into 50Ω load.
3.Coupled transmission line HOM damper.
4.Inductively coupled 5-element High-pass Chebyshev filter terminated into 50Ω load.

The last pattern has been chosen as a simplest and easiest to implement into the 26.7 MHz accelerating cavity. This paper shows the results of the calculations of such a damper. MAFIA 3-d numerical code has been used to calculate the coupling loop parameters, and SPICE software was used to determine the frequency response of the High-pass Chebyschev filter.

Results of the signal level measurements of such a mode damper installed in POP cavity are also reported.

HOM SPECTRUM OF 26.7MHz CAVITY

The required limit for HOM shunt impedances (as determined by Jim Rose) is shown in Fig.1.

HOM spectrum of the longitudinal modes of the RHIC 26.7 MHz cavity (MAFIA results) is given in Table 1 (modes with the Rsh>5kΩ and the Fr<500MHz were considered).

Mode nr.	1	2	3	4	5	6	7	8	9	10
Freq [MHz]	26.3	103.2	192.2	275.1	313.3	322.7	377.5	390.6	453.6	492.7
Rsh [kΩ]	1060	133	88	236	58	270	20	165	223	24
Qo	17900	29500	37000	28100	16700	22400	46300	46700	20800	35500
Rsh/Q [Ω]	59.4	4.5	2.4	8.4	3.5	12.1	0.4	3.5	10.7	0.7

TABLE 1

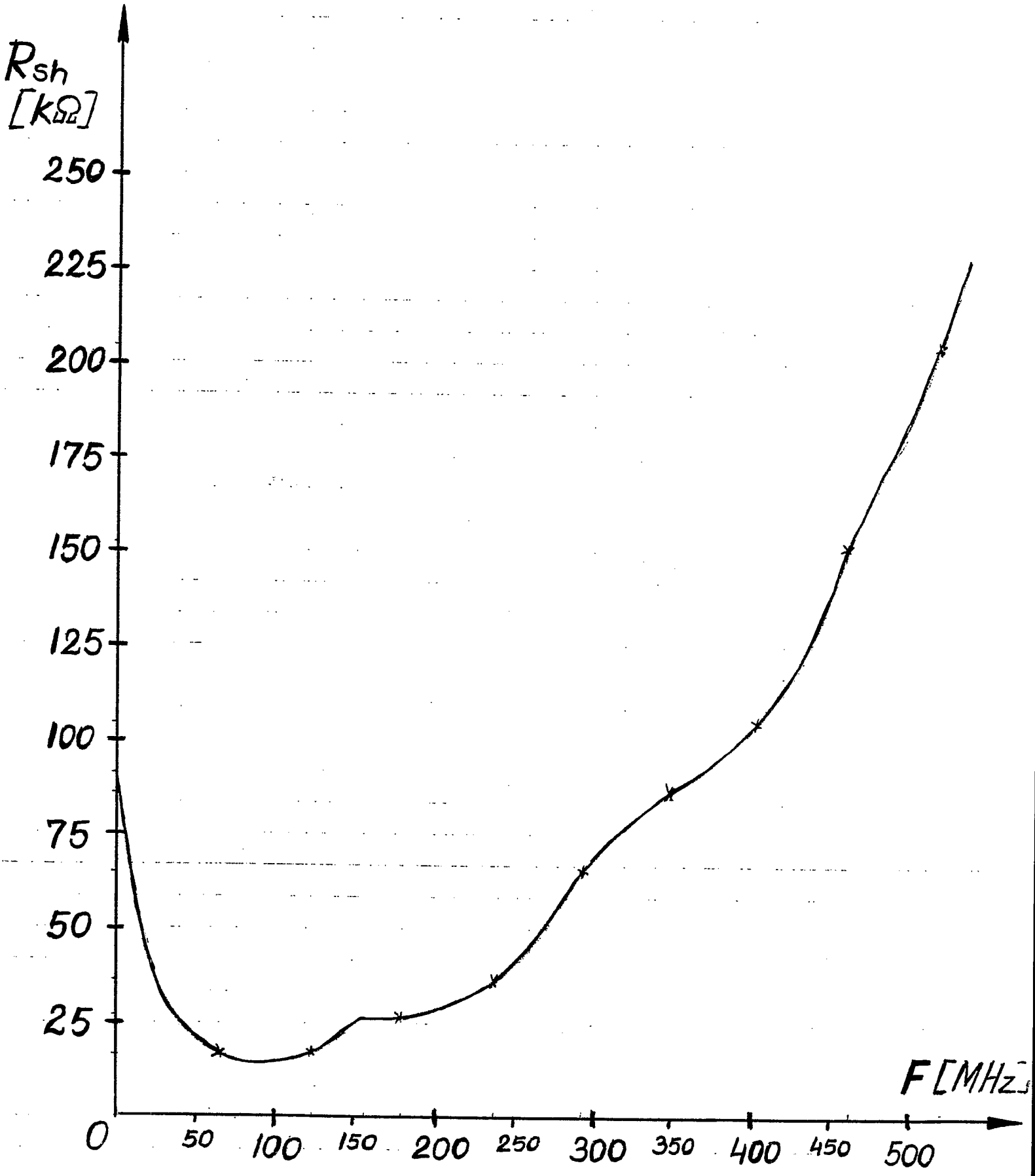
Rsh
[kΩ]
250
225
200
175
150
125
100
75
50
25
0
50
100
150
200
250
300
350
400
450
500
F [MHz]

FIG. 1

COUPLING LOOP

The best location for the HOM coupling loop is the shorted end of the coaxial cavity near the inner conductor. This is the place where the magnetic fields of almost all HOM are the highest(smallest loop size required). The basic dimensions and the location of the HOM coupling loop are shown in Fig.2. The total HOM damping system will consist of two dampers placed about 90° apart. This way the damping system will also effect most of the perpendicular modes. The total r.f. power losses in each of HOM coupling loop (for Ug=400kV) are 350W, so the water cooling is necessary. The r.f. voltage across the coupling loop at the fundamental frequency (for Ug=400kV) -10.4kV.

HOM FILTER

Each HOM damper has to be equipped with the fundamental frequency rejection system. Two different approaches have been considered:

1. Notch filter based on the coaxial structure tuned to the fundamental frequency.
2. High pass Chebyshev filter.

For the reasonable size of the notch filter the power dissipated in the filter at the fundamental frequency for Ug=400kV(Rdamp=40kΩ, Uloop=10.4kV) - Pdamp=1.35kW.
The power dissipated at the fundamental frequency in the five elements high-pass Chebyshev filter will be by factor of ten smaller (less than 50W for the filter constructed of 3" transmission line). The schematic diagram of the five element high-pass Chebyshev filter is shown in Fig.3, its mechanical structure at Fig. 4. and it performances in Fig.5.

HOM DAMPER PERFORMANCES

The schematic diagram of the HOM damper equipped with five elements high pass filter is shown in Fig.6. The results of the calculations of such a unit are given in Table 2, and the graphical illustration in Fig. 7. All monopole HOM shunt impedances have been damped well below the specified limit. The HOM loop voltage and the reactance for each HOM frequency have been calculated and the results are shown also in the Table 2.

TEST RESULTS

In order to confirm the results of the calculations the similar calculations have been performed on the HOM dampers installed in the POP 26.7 MHz cavity and then the measurements on the signal level have been done. The results of the calculations and test results are given in Table 3.

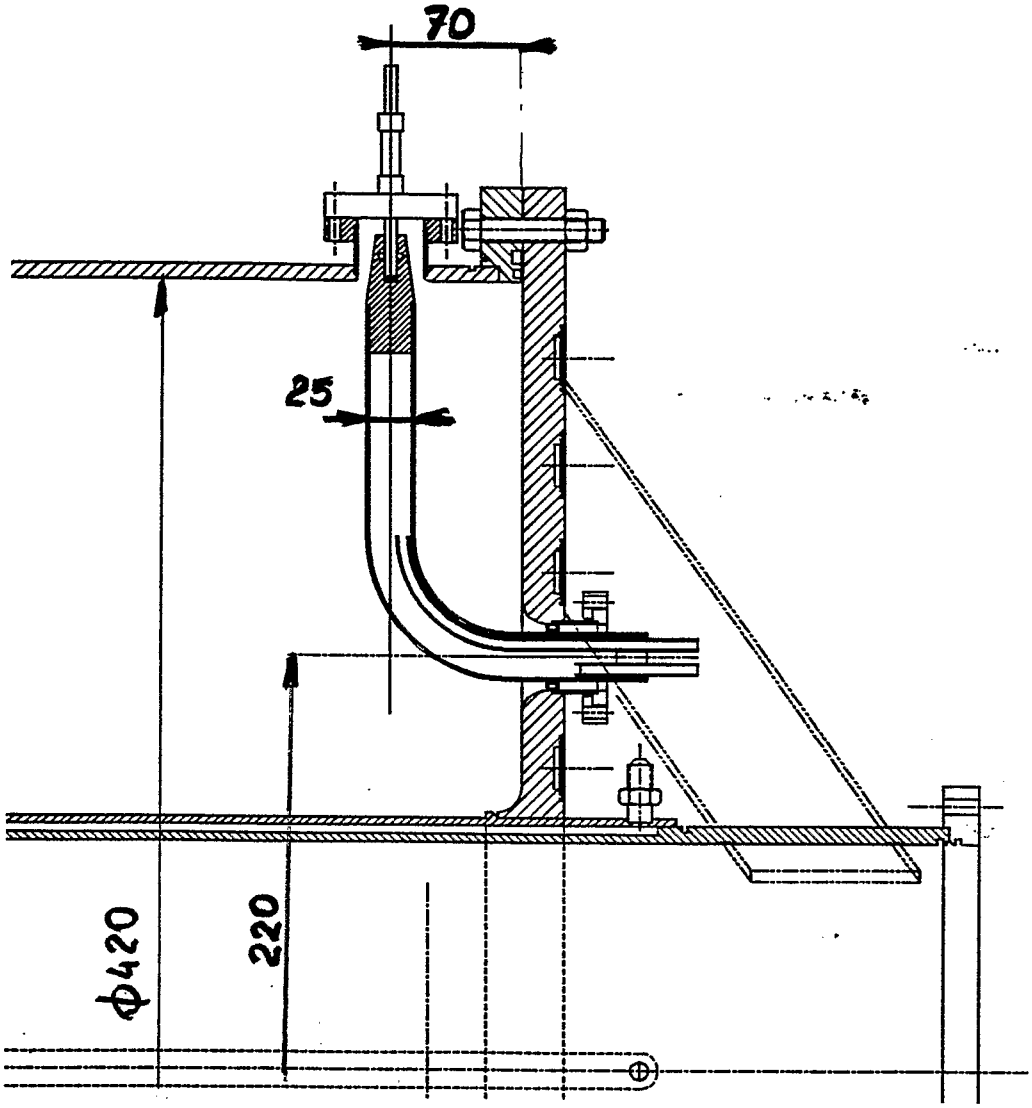

FIG. 2

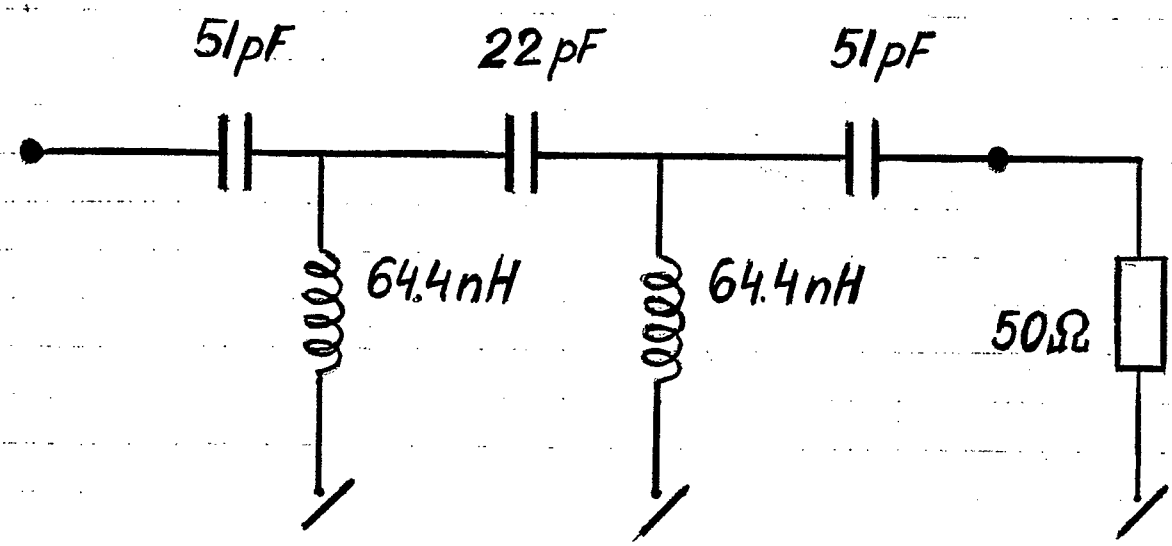

FIG. 3

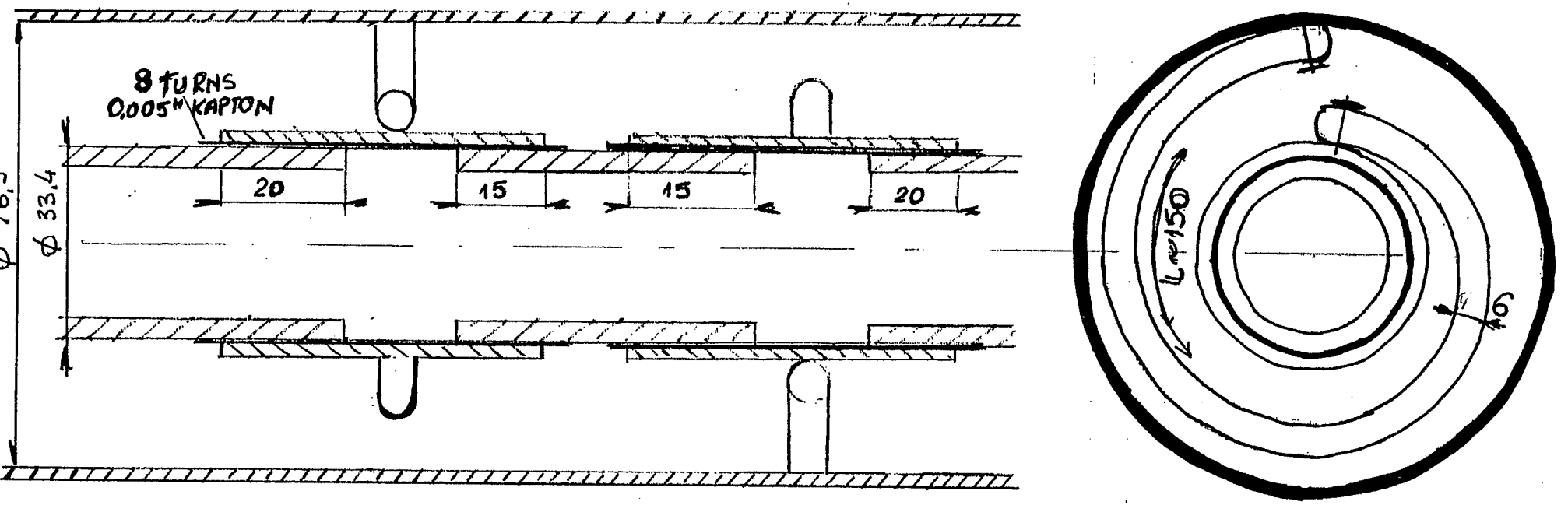

FIG. 4

MAFIA RESULTS(NO HOM INSTALLED)	2 Dampers Installed	Damping factor	Loop reactance	Loop voltage

Nr	F[MHz]	Rsh[kΩ]	Q[-]	R/Q[Ω]		Rsh'[kΩ]	Rsh/Rsh'	Xl[Ω]	Ul [kV]
1	26.3	1060	17900	59.4		1060	1	+j16.8	10.4
2	103.2	133	29500	4.5		4.7	28.3	+j92	123
3	192.2	88	37000	2.4		1.4	63	+j950	1250
4	275.1	236	28100	8.4		8.6	27.4	-j134	64
5	313.3	58	16700	3.5		52.5	1.1	-j95	5.9
6	322.7	270	22400	12.1		23	26.2	-j92	26.2
7	377.5	20	46300	0.4		4	11.7	-j70	50.1
8	390.6	165	46700	3.5		6.6	25	-j61	40.3
9	453.6	223	20800	10.7		112	2	-j42	5.9
10	492.7	24	35500	0.7		12.4	1.9	-j33	15

Table 2

POP CAVITY - MAFIA RESULTS TEST RESULTS

MODE NR	F[MHz]	Rsh[kΩ]	Q[-] *1000	Rsh/Q	Rsh' [kΩ]	Rsh/Rsh'		F[MHz]	Q[-] *1000	Q'[-] *1000	Q/Q'
1	26. 7	1110	16.4	67.7	76	14.6		26.88	17.3	1.1	15.7
2	99.1	72.1	25.5	2.8	0.8	90		98.8	19.8	0.19	102
3	157.9	5.8	30.8	0.19	0.03	193		157.7	22.3	0.11	203
4	215.7	4.4	38.2	0.12	0.07	63		216.3	29.0	0.46	63
5	286.4	98	27.6	3.6	9.0	10.9		287.4	8.0	1.5	5.3
6	343.4	180	19.2	9.4	32.0	5.6		342.2	8.7	2.1	4.2
7	406.0	112	40.5	2.8	4.7	23.8		402.2	2.3	1.1	2.1

TABLE 3.

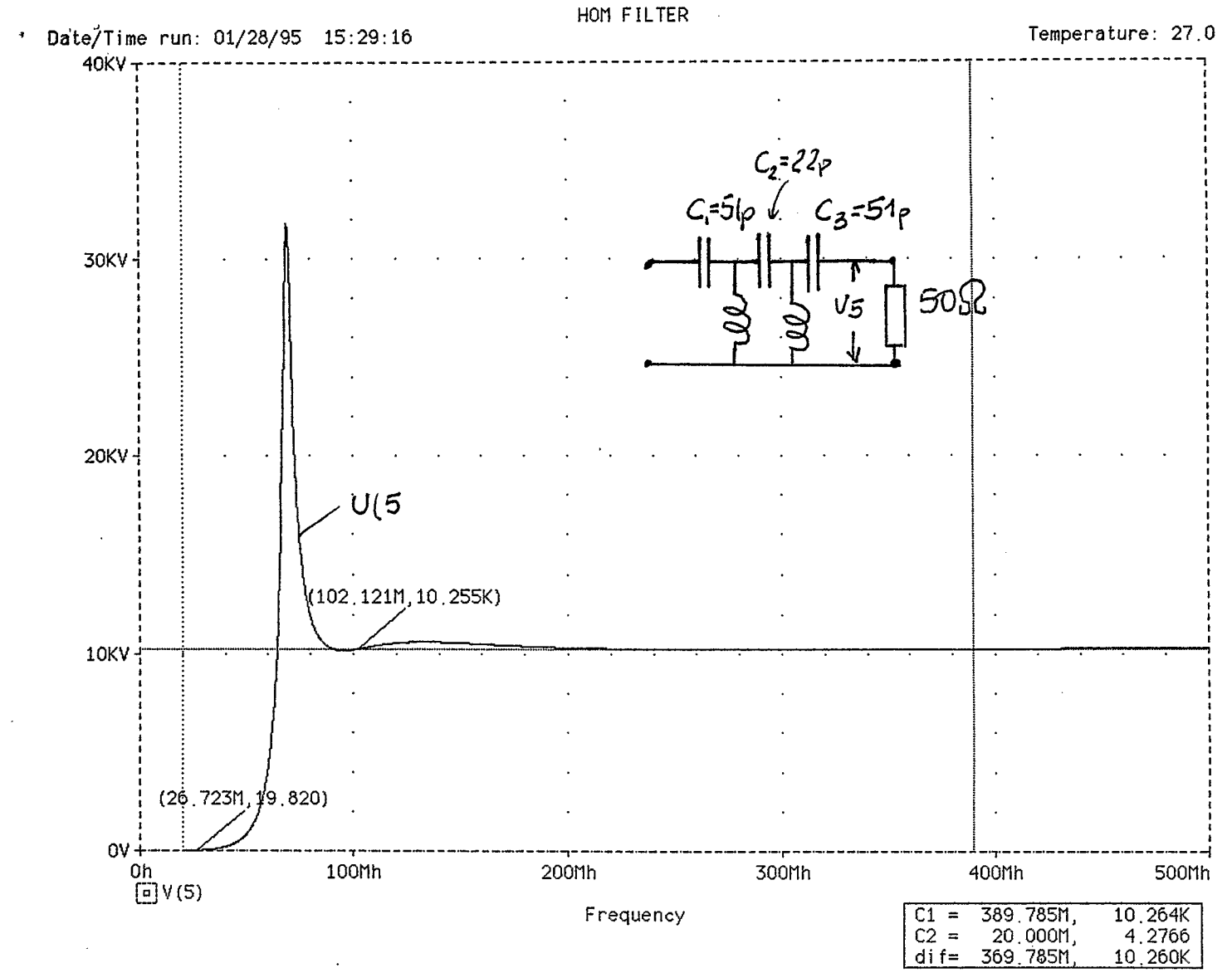
HOM FILTER
Date/Time run: 01/28/95 15:29:16
Temperature: 27.0
40KV
30KV
20KV
10KV
0V
0h
100Mh
200Mh
300Mh
400Mh
500Mh
V(5)
Frequency
C2=22p
C1=51p
C3=51p
V5
50Ω
U(5
(102.121M,10.255K)
(26.723M,19.820)
C1 = 389.785M, 10.264K
C2 = 20.000M, 4.2766
dif= 369.785M, 10.260K

FIG. 5

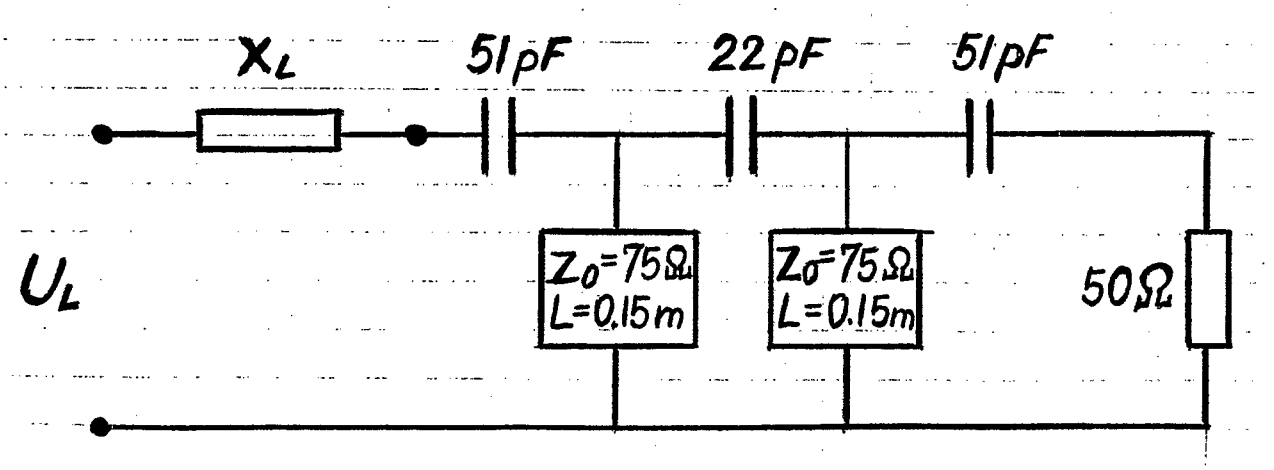
XL
51pF
22pF
51pF
UL
Zo=75Ω
L=0.15m
Zo=75Ω
L=0.15m
50Ω

FIG. 6

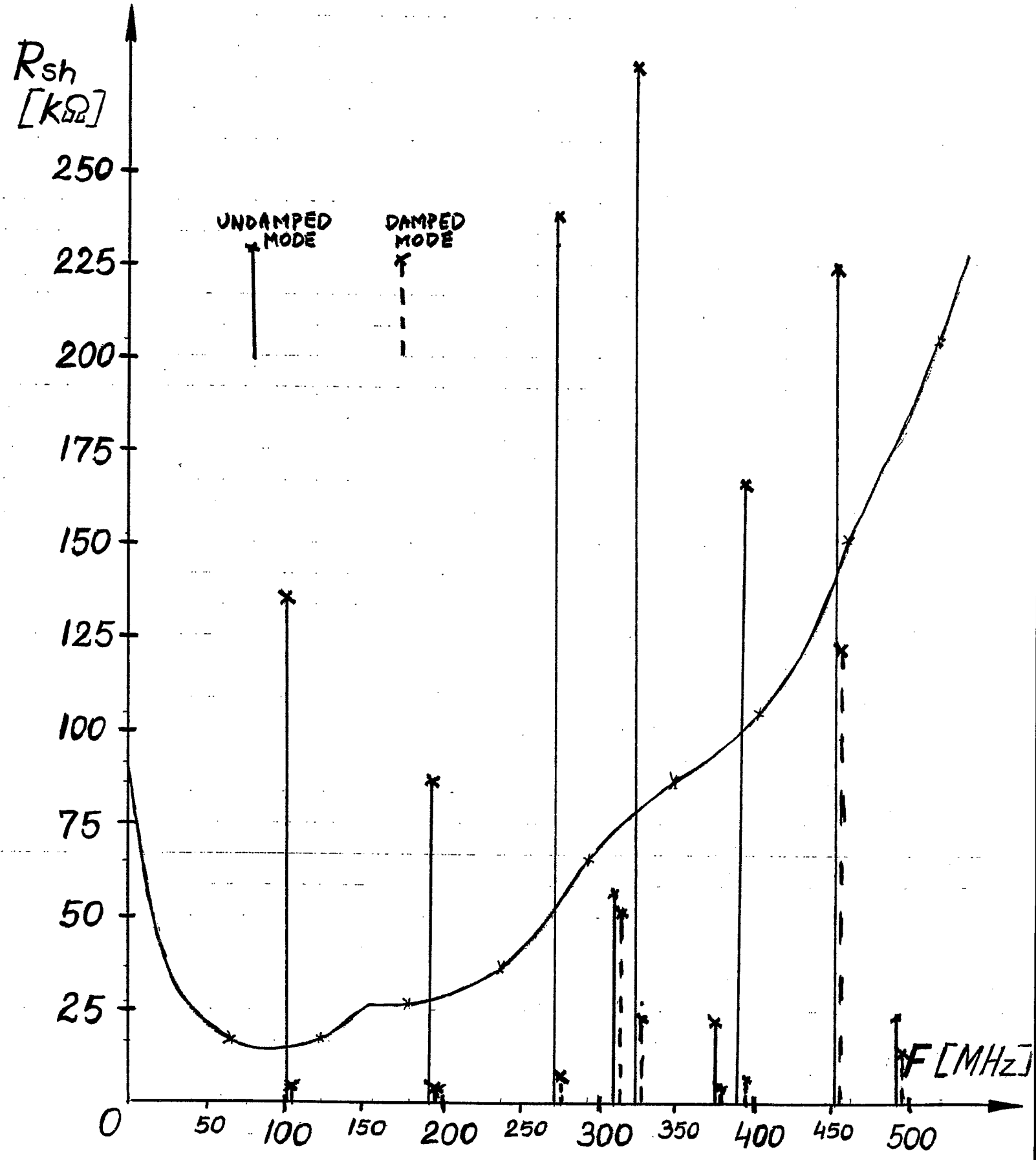
Rsh
[kΩ]
250
225
200
175
150
125
100
75
50
25
0
UNDAMPED MODE
DAMPED MODE
50
100
150
200
250
300
350
400
450
500
F [MHz]

FIG. 7