RHIC/RF-16

RHIC Project

BROOKHAVEN NATIONAL LABORATORY

RHIC/RF Technical Note No. 16

RHIC Rf Phase Noise with Phase Loop Feedback

X. Pei

November 1993

RHIC Rf Phase Noise with Phase Loop Feedback

Xiaomin Pei

Brookhaven National Laboratory

Upton, NY 11973

October 25, 1993

It has been shown that noise from the rf source causes growth of the longitudinal emittance of the bunched beam[1]. Particularly harmful is the phase noise, which directly displaces the beam along the phase axis of the phase space. Because of technical and financial constraints in lowering the rf source noise, feedback techniques are used to reduce the rf noise.

If the phase difference between the beam and an rf cavity is compared and used to drive a phase-shifter or VCO, the effective rf noise the beam sees can be made much smaller in certain frequencies. This is the principle of phase loop feedback and the following is a discussion of its effect in rf noise reduction.

Fig.1 is a block diagram of a beam phase loop. Here the phase comparator output is used to drive a phase-shifter. It is also common for a VCO to be the phase changing element. The results are equivalent because frequency modulation and phase modulation are only different by a differentiation operator. With proper choice of transfer functions, the conclusions are identical. In the actual realization, the phase loop may also be nested in a radial loop that provides automatic closed orbit error correction. The additional feedback should not change the phase loop performance with proper loop parameters.

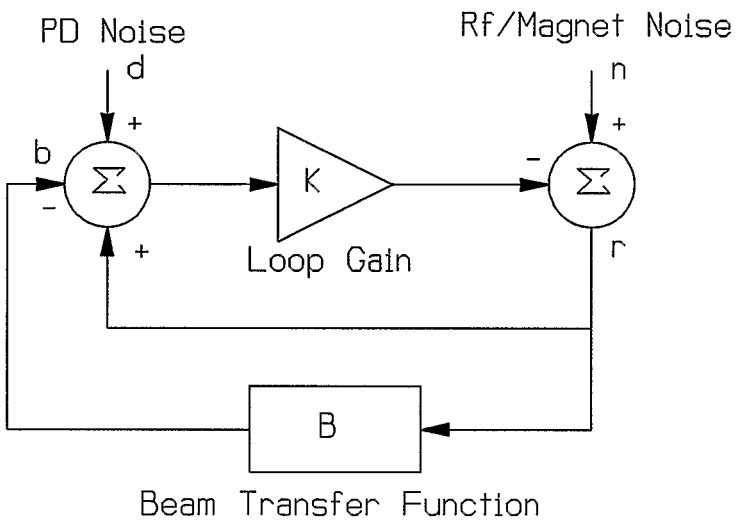

Fig.1 Block diagram of a beam phase feedback loop.

In Fig.1, B is the beam transfer function, n the rf phase noise from the rf generator, r the phase noise on the rf cavities which is also the phase noise the beam actually sees, b the beam phase with respect to the rf, and d the noise of the phase detector. The feedback loop has a frequency dependent gain of K, which is determined by both the rf paths of the ring, such as cavities and phase shifters, and a loop compensation amplifier designed to achieve the desired overall loop dynamics.

To carry out the algebra for Fig.1, we obtain the expression for the rf phase noise seen by the beam:

$$r=\frac{-Kd+n}{1-K(B-1)} \tag{1}$$

From the above we see that the rf noise seen by the beam consists of two components, that from the source noise n and that from the phase detector noise d.

To fully evaluate Eq.1, we need to determine the beam transfer function B first.

For a single particle seeing a vectored rf phase ϕ when circulating the ring, we have the following equations of motion:

$$\begin{aligned} \dot{p}&=\frac{QeV}{C}\sin\phi \\ \dot{\phi}&=h\omega_r-\omega \\ \frac{d\omega}{\omega}&=\eta\frac{dp}{p} \end{aligned} \tag{2}$$

where p is the particle momentum, Q the charge, V the vectored rf peak voltage of the ring, C the circumference of the ring, ω the particle angular revolution frequency, ω_r the angular rf frequency, and h the harmonic number. η is the frequency slipping factor.

The above three equations can be combined into a second order nonlinear equation in phase:

$$\ddot{\phi}+\omega_s^2\sin\phi=\dot{\omega}_r \tag{3}$$

where

$$\omega_s^2=\frac{2\pi h\eta QeV}{C^2m\gamma} \tag{4}$$

is the small phase angle synchrotron oscillation frequency squared.

Expand ϕ to the first order, we get the linearized second order equation for small phase excursions. The corresponding transfer function of beam in the frequency domain via Laplace Transform is:

$$\frac{\phi(s)}{\phi_r(s)} = \frac{s^2}{s^2+\omega_s^2} \tag{5}$$

For the phase noise caused beam emittance growth, we are only concerned with the noise spectrum at ω_s, $3\omega_s$, $5\omega_s$...[1].

For a single particle at small synchrotron oscillation phase angles, because of the pole at ω_s in Eq.4, we can see from Eq.1 that both the phase detector and the rf source noises have been completely suppressed at the synchrotron oscillation frequency ω_s.

In reality, our cavity rf voltage is sinusoidal. Because of the finite phase spread caused by the bunch emittance, there will be a spread in synchrotron oscillation frequency within the bunch. This modifies the beam transfer function. Instead of having a pole at ω_s, the beam transfer function is related to the beam dispersion integral and its approximate absolute value is[2,3]:

$$|B| \sim \frac{\omega_s}{S} \tag{6}$$

where S is the angular frequency spread in synchrotron oscillations within the bunch. We can see that Eq.5 yields the limit of Eq.6 when S approaches zero.

For a bucket that is 80% full, $|B|$ is around 3. According to Eq.1, if $K >> 1$then the phase detector noise is reduced by a factor of (B-1) and the rf source noise is reduced by K(B-1) at the synchrotron oscillation frequency ω_s.

For frequencies at $3\omega_s$, $5\omega_s$, etc., the beam transfer function B is of the order of unity according to Eq.4. The physical interpretation is that the beam does not follow the rf phase change at frequencies much above the synchrotron oscillation frequency due to its inertia. The beam thus sees a hundred percent of phase modulation present in the rf source.

If we set B equal to 1 in Eq.1, we have:

$$r = -Kd + n \tag{7}$$

Thus we see that the rf phase loop has no effect in suppressing high frequency source noises. Also, the phase detector noise is enhanced by a factor of K. This is to be expected since at higher frequencies, the loop is practically open because the beam transfer function is a direct feedthrough and the phase detector does not see any error signals other than the noise generated by itself.

In summary, the phase loop can suppress rf source noise quite effectively at the synchrotron oscillation frequency. The effectiveness of such suppression is determined by the beam synchrotron oscillation frequency spread and the total loop gain. The noise introduced by the phase detector at the synchrotron oscillation frequency depends on the bunch synchrotron oscillation frequency spread. At higher frequencies, the phase loop is not effective in suppressing rf source noise. Further, the phase detector noise can be increased by the phase loop gain.

In choosing the parameters for the low level rf system, the rf source noises at and above three times the synchrotron oscillation frequency need to be minimized since they cannot be suppressed by the phase loop. The phase detector should be designed carefully

to avoid noise contributions at and above the synchrotron oscillation frequency. The gain of the phase loop should roll off quickly above the synchrotron oscillation frequency to avoid enhancement of noises contributed by the phase detector.

REFERENCES

1. G. Dome, CERN 89-01, 2nd Advanced CERN Accelerator School, Berlin, 370, 1987.
2. F. Sacherer, IEEE Trans. Nucl. Sci. NS-20, 825, 1973.
3. E. Raka, AIP Conference Proceedings 184, 288, 1989.