RHIC-PG-41

RHIC RF SYSTEMS

H. Halama

Brookhaven National Laboratory

March 9, 1984

RHIC RF System

1 MV/turn

	Option 1	2	3
V gap (kV)	200	200	20
frequency (Mc)	54	27	54
length (m)	1.3	2.5	075
R MΩ	1.06	0.83	
Cavities/ring	5	5	50
Dissipation kW	19	24	0.5
Total R MΩ	< 5	< 4	< 0.5
Δf	—	0.4%	(Au β = .9968

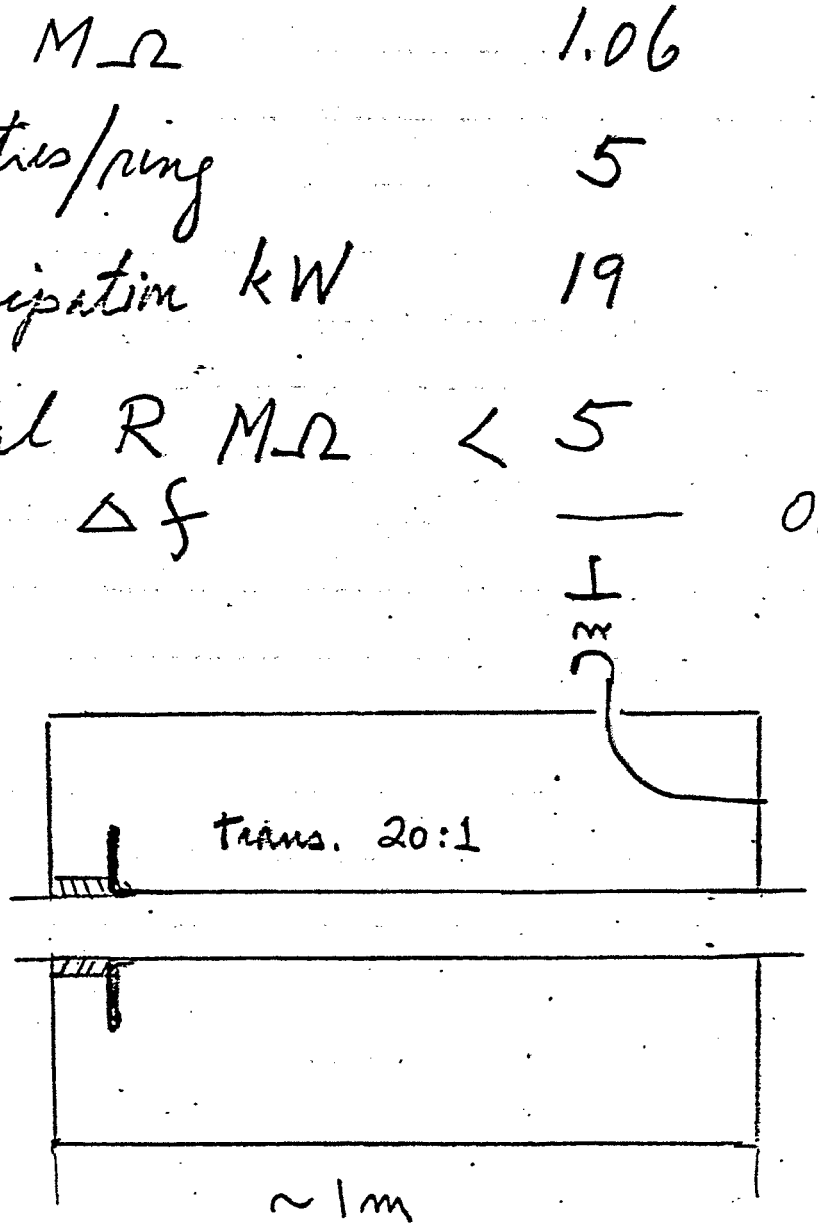

Option 3

Small 1.5 kW
Triode
Air core cavity
Lower Impedance

Needs more study

Power Losses

$$W = \frac{1}{2} R_s \left(\frac{V}{Z_0}\right)^2 \frac{1}{16\pi}\left(\frac{\lambda}{R_1} + \frac{\lambda}{R_3}\right)$$

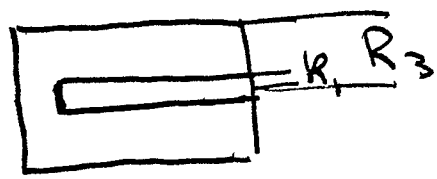

$$W \propto \sqrt{\lambda}$$

f(length)		W
	$\lambda/4$	1
	$\lambda/8$	1.6
	$\lambda/16$	3.3

$$f\left(\frac{R_3}{R_1}\right)$$

		W
min	$\frac{R_3}{R_1} = 9$	1
	$\frac{R_3}{R} = 3$	1.65

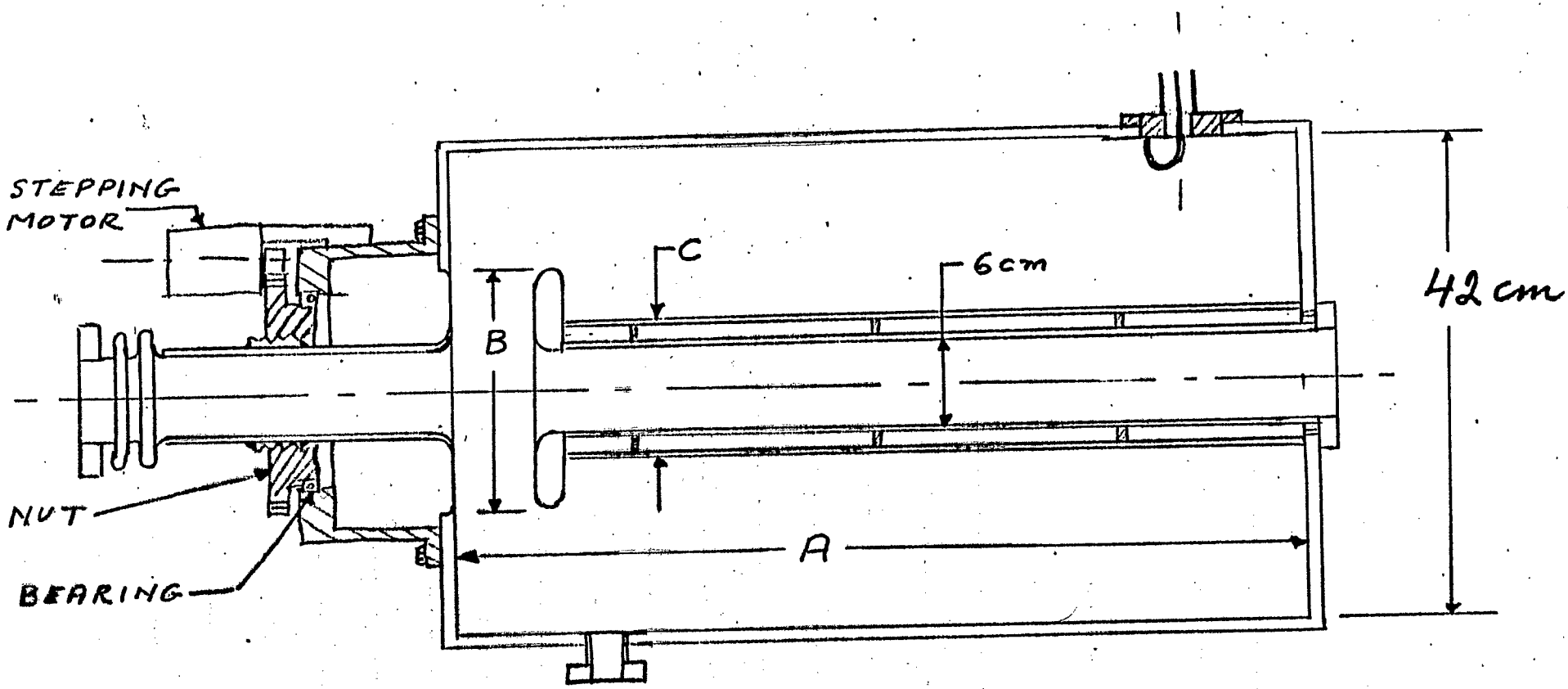

	DIM.	A	B	C
CAVITY	1	1.3 m	16cm	8 cm
	2	2.5 m	20cm	10 cm

SKETCH of HRIC RF CAVITY

21-31-84