B. DeVito , G. Macintyre, M.Rehak, J.Sondericker. 12/31/1996

Effect of Springs on Quadrupoles.

Springs have been inserted in the plane of the top plate of support posts in order to restrain lateral motion of the quadrupoles (Fig.1). These springs are inserted in each of the two support posts, thereby eliminating lateral play without restricting axial motion required to allow thermal expansion and contraction. The following is a description of a test performed to assess the effect of springs on quadrupoles.

1)Some parameters.

Some of the pertinent data are listed first.

The spring stiffness is shown in Fig.2 and varies between 9817 lbs/in to 7246 lbs/in., for the present discussion a spring rate of 10 000 lbs/in will be assumed.

The support post stiffness is 50 000 lbs/in when the boundary conditions are such that one end is fixed and the other guided (moves parallel to the ground). Fig.3 shows measurements and finite element analysis ANSYS of the support post stiffness for an arrangement of posts replicating the fixed-guided boundary conditions.

The bellows lateral stiffness is 150 lbs/in for each of the two interconnect bellows and will thus be neglected.

Results of a test (without spring) show (Fig.4) that when the quadrupoles is loaded laterally an horizontal force of approximately 200 lbs is required to overcome friction between the cold mass and the plate on top of the support posts.

2)The test.

The test consisted of applying an horizontal force on the quadrupole using a specially designed fixture consisting of railings. Readings of the relative motion of the cold mass with respect to the cryostat were performed using a potentiometer mounted in the top plate of the post. The force was applied in two opposite directions: compressing the spring and away from the spring against a stop.

Results indicated that the same deflections were registered regardless of the direction of the force (Fig.5). A force of up to 550 lbs was applied and a deflection of 10 to 14 mils was recorded for either force direction. The tests were repeated a second time yielding identical results. The value of the force divided by the deflection corresponds to the support spring rate of 50 000 lbs/in for fixed-guided conditions.

The fact that deflections are identical for either force direction indicates that 500 lbs are insufficient to overcome the sum of 200 lbs for friction and the restoring force exerted by the spring which must then amount to at least 300 lbs. Consequently the spring must have been compressed by 30 mils if the spring rate is taken as 10 000 lbs.in.

3) Correlation between manual gage and potentiometer readings.

A manual gage was mounted in addition to the potentiometer. It read cold mass deflections offset in height (half way up the cold mass) and in length (on the interconnect volume) from those of the potentiometer. These two offsets explain why manual gage reading were 40 mils when potentiometer readings were only 10 mils. These gage readings are consistent with those shown in Fig.4 where a deflection of 50 mils was registered for a force of 450 lbs applied with the same fixture.

NOTES:

1. MATERIAL: MOLD FROM ULTEM 2100, A GE PLASTICS PRODUCT, PER BNL SPEC RHIC-MAG-M-7558.

2. MARK IN ACCORDANCE WITH MIL-STD-130. RUBBER STAMP PART NO. AND REV LETTER, USING EPOXY BASE WHITE INK, IN .12 HIGH CHARACTERS. LOCATE APPROX AS SHOWN

REVISIONS

REV	ZONE	ECN NO.	DESCRIPTION	BY	DATE	CKR	APP
A			INITIAL RELEASE	BH	12-7-90	CG	DB
B		MG00046	AS PER ECN	AA	2-13-91	CA	
C		MG00312	AS PER ECN	RS	1/20/93	KM	EK
D		MG00408	AS PER ECN	SC	9/9/93		EK

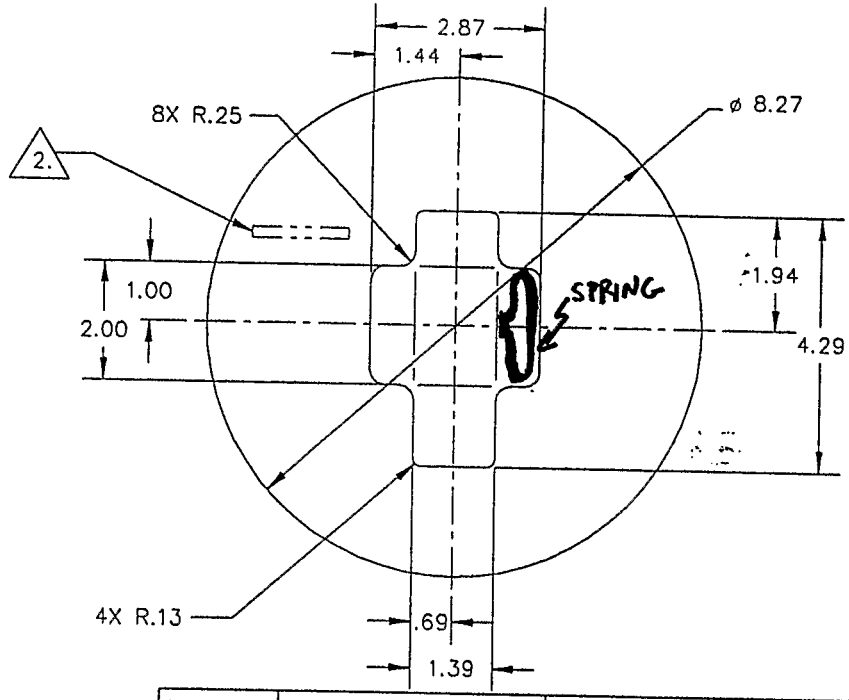

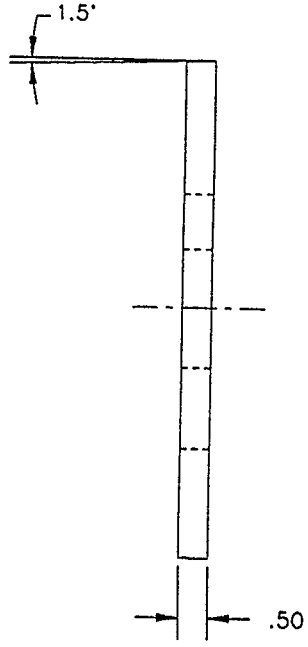

Fig. 1

OUTSTANDING ECN NUMBERS	INTERPRET IN GENERAL ACCORDANCE WITH ASME Y14.24M-1989	RHIC			BROOKHAVEN NATIONAL LABORATORY ASSOCIATED UNIVERSITIES, INC. UPTON, N.Y. 11973
	UNLESS OTHERWISE SPECIFIED	DRAWN BY	HAUG	12-7-90	TITLE: DISK, CLOSURE, SLIDING POST
	DIMENSIONS ARE IN INCHES DECIMAL TOLERANCES .X ± .06 .XX ± .02 .XXX ± .005 ANGULAR TOLERANCE ± 1°	DESIGN APPROVAL	C.M.G.	1-23-91	
		CHECKED BY	C.M.G.	1-23-91	
		ENGINEER APPROVAL	C.M.Gaggin	1-23-91	
		SUPERVISOR APPROVAL	D.P.Brown	1-24-91	SIZE B — DRAWING NUMBER: 12065062 — REV. D
	FINISH ✓ — BREAK SHARP EDGES MAX. .03 MIN. .01	Q.A. APPROVAL	V.Buzzanca	5/20/91	Q.A. CATAGORY: — SCALE: 1/2 — WEIGHT: — SHEET 1 OF 1

1206/5062d
plot: 1/2

Second
835 data plotted
Red = Metalurgy

R A Grandinetti
SPRING1.XLS
Spring #6

7/28/95
Herb Data

Ram Dia = 5 in = 19.6 in^2 =

Ram Press psi	press offset	Load Press	Ram Load	Deflection ins	Load lbs	Overall Spring Rate lbs/in	Incremental Spring Rate	
0	13	-13	0.0	0	0.0	0	0	0.004
20	13	7	137.4	0.014	137.4	9817.47	9817.47	0.01
25	13	12	235.6	0.024	235.6	9817.47	9817.47	0.02
29.5	13	16.5	324.0	0.034	324.0	9528.72	8835.72	0.03
33.5	13	20.5	402.5	0.044	402.5	9148.10	7853.98	0.04
37.5	13	24.5	481.1	0.054	481.1	8908.44	7853.97	0.05
44	13	31	608.7	0.084	608.7	7246.23	4254.24	0.08

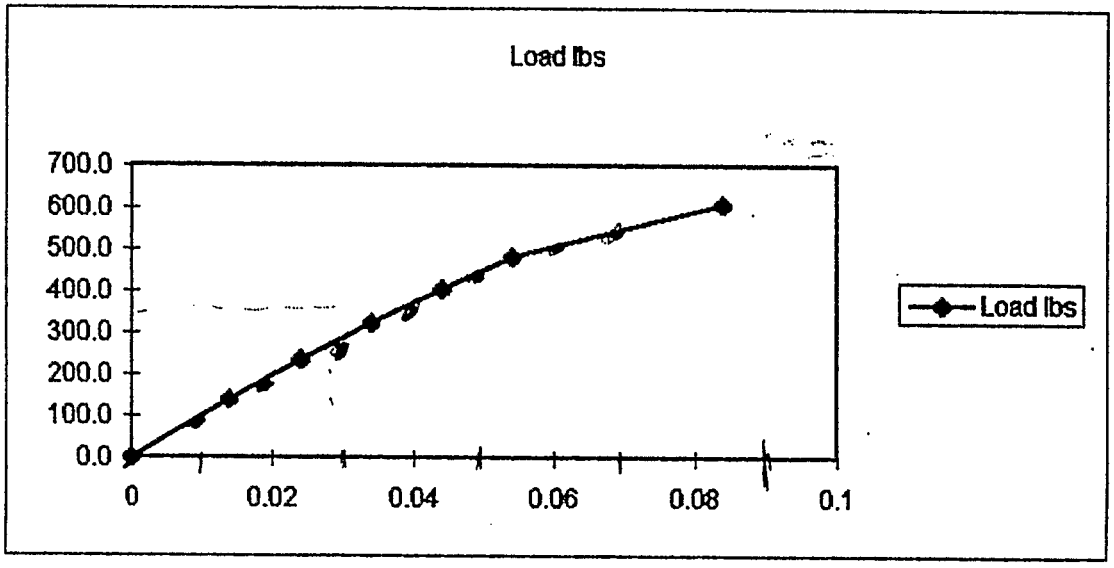

Fig. 2

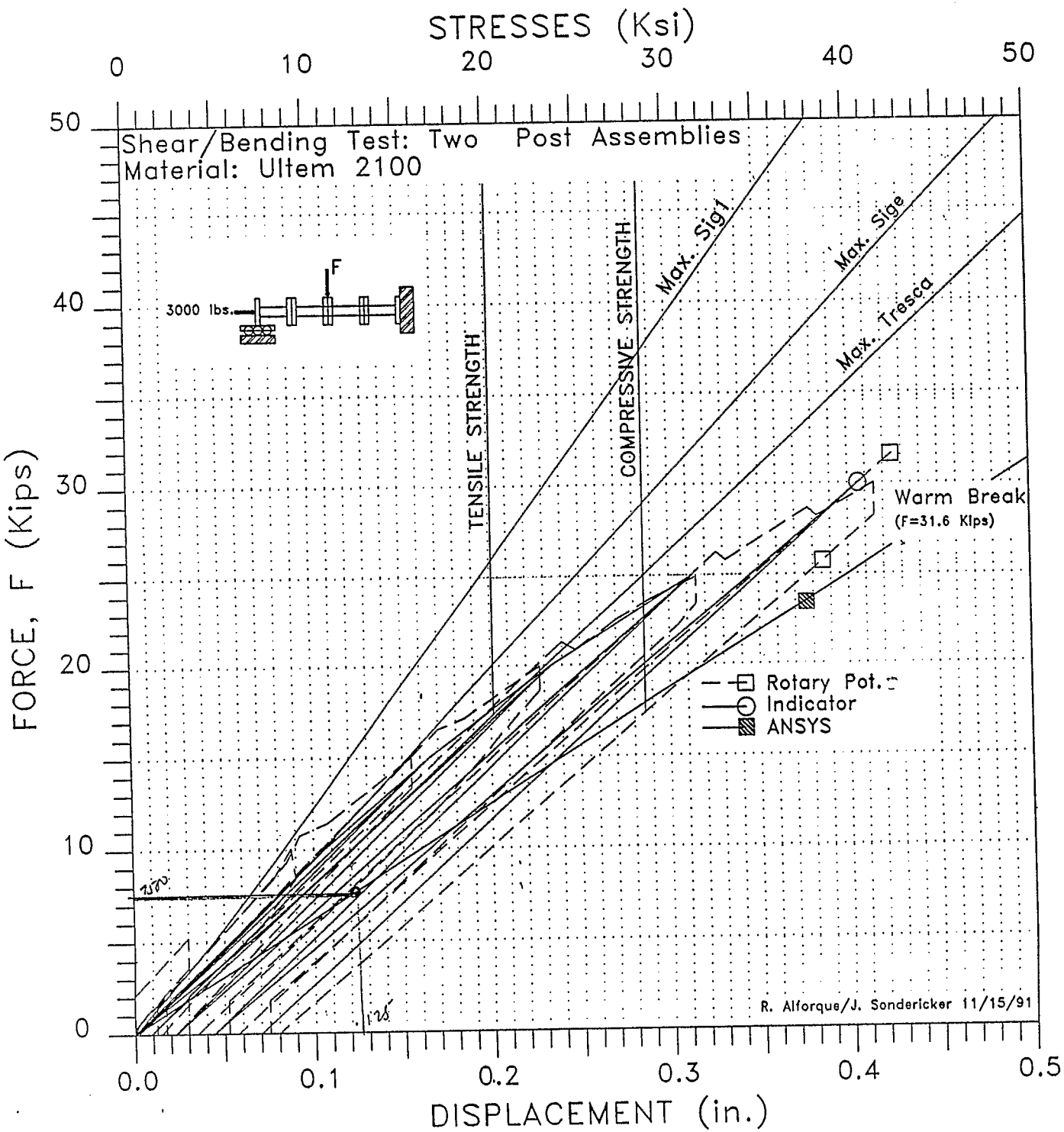
STRESSES (Ksi)
0
10
20
30
40
50
Shear/Bending Test: Two Post Assemblies
Material: Ultem 2100
F
3000 lbs.
TENSILE STRENGTH
COMPRESSIVE STRENGTH
Max. Sig1
Max. Sige
Max. Tresca
Warm Break
(F=31.6 Klps)
Rotary Pot.
Indicator
ANSYS
R. Alforque/J. Sondericker 11/15/91
FORCE, F (Kips)
0
10
20
30
40
50
0.0
0.1
0.2
0.3
0.4
0.5
DISPLACEMENT (in.)

Fig. 3

CQS003 END LOAD/DEFLECTION

Load/Delfection/Slips File:4FCQS003.SS

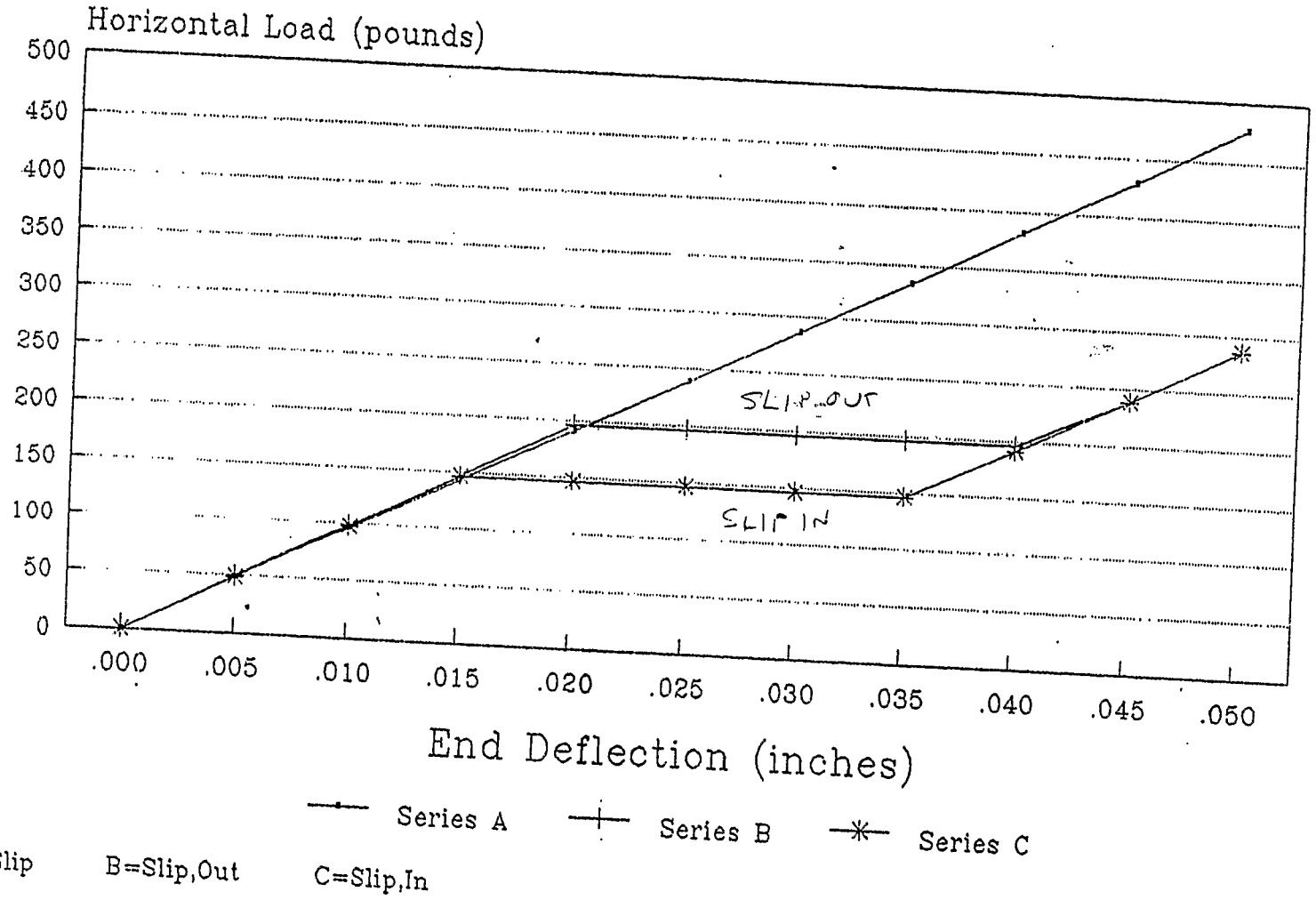

A=No Slip B=Slip,Out C=Slip,In

FIG. 4

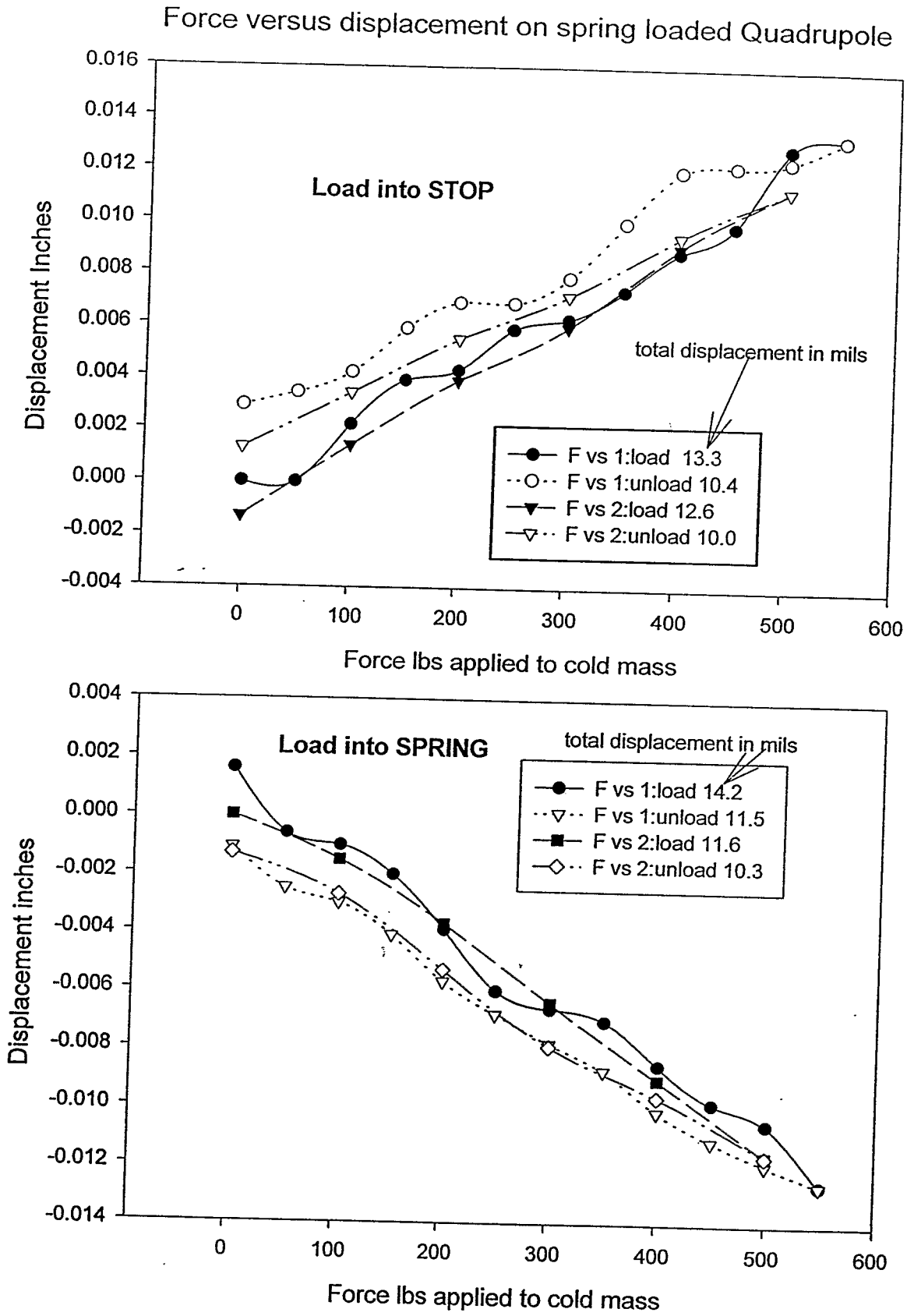
Force versus displacement on spring loaded Quadrupole
Load into STOP
total displacement in mils
F vs 1:load 13.3
F vs 1:unload 10.4
F vs 2:load 12.6
F vs 2:unload 10.0
Displacement Inches
Force lbs applied to cold mass
0.016
0.014
0.012
0.010
0.008
0.006
0.004
0.002
0.000
-0.002
-0.004
0
100
200
300
400
500
600
Load into SPRING
total displacement in mils
F vs 1:load 14.2
F vs 1:unload 11.5
F vs 2:load 11.6
F vs 2:unload 10.3
Displacement inches
Force lbs applied to cold mass
0.004
0.002
0.000
-0.002
-0.004
-0.006
-0.008
-0.010
-0.012
-0.014
0
100
200
300
400
500
600

Fig. 5