AD/RHIC-RD-6

# RF Cavities and Amplifiers

*(Mini-Workshop on RHIC RF Systems)*

*July 11-15, 1988*
*Collider Center*

J. G. Cottingham
BNL

# RHIC ACCELERATING SYSTEMS

| | | |
|---|---|---|
| Frequency | 26.74 | 160.4 MHz |
| Harmonic No. | 342 | 2052 |
| Accelerator Voltage/Ring | 0.3-0.4 | 11.0 MV |
| Frequency Change | -1% | -0.12% |
| Number of Cavities/ring | 2 | 11 |
| Voltage/cavity | 0.15-0.2 | 1.0 MV |
| Cavity Power | 20-25 | 75-90 KW |
| Amplifier Power Rating | 45 | 100 KW |
| "ON" time | C.W. | C.W. |
| Sin $\theta s$ | .04 | 0 |
| No. of Bunches | 57 | 57 |

E. Cathinchan

## RHIC ACCELERATING SYSTEM (continued)

| Frequency | 26.74 | 160.4 MHz |
|---|---|---|
| Shunt Z/cavity, Tuned | $800 \times 10^3$ | $6.7 \times 10^6$ |
| Shunt Z, Total Tuned | $1.6 \times 10^6$ | $73.3 \times 10^6$ |
| Shunt Z/cavity Detuned | $-j\ 8.9 \times 10^3$ | $-j\ 47 \times 10^3$ ohms |
| Shunt Z, Total Detuned | $-j\ 17.8 \times 10^3$ | $-j\ 520 \times 10^3$ ohm |
| Cavity Q, Unloaded | 9000 | 45000 |
| Cavity Q, Loaded | 4500 | 22500 |

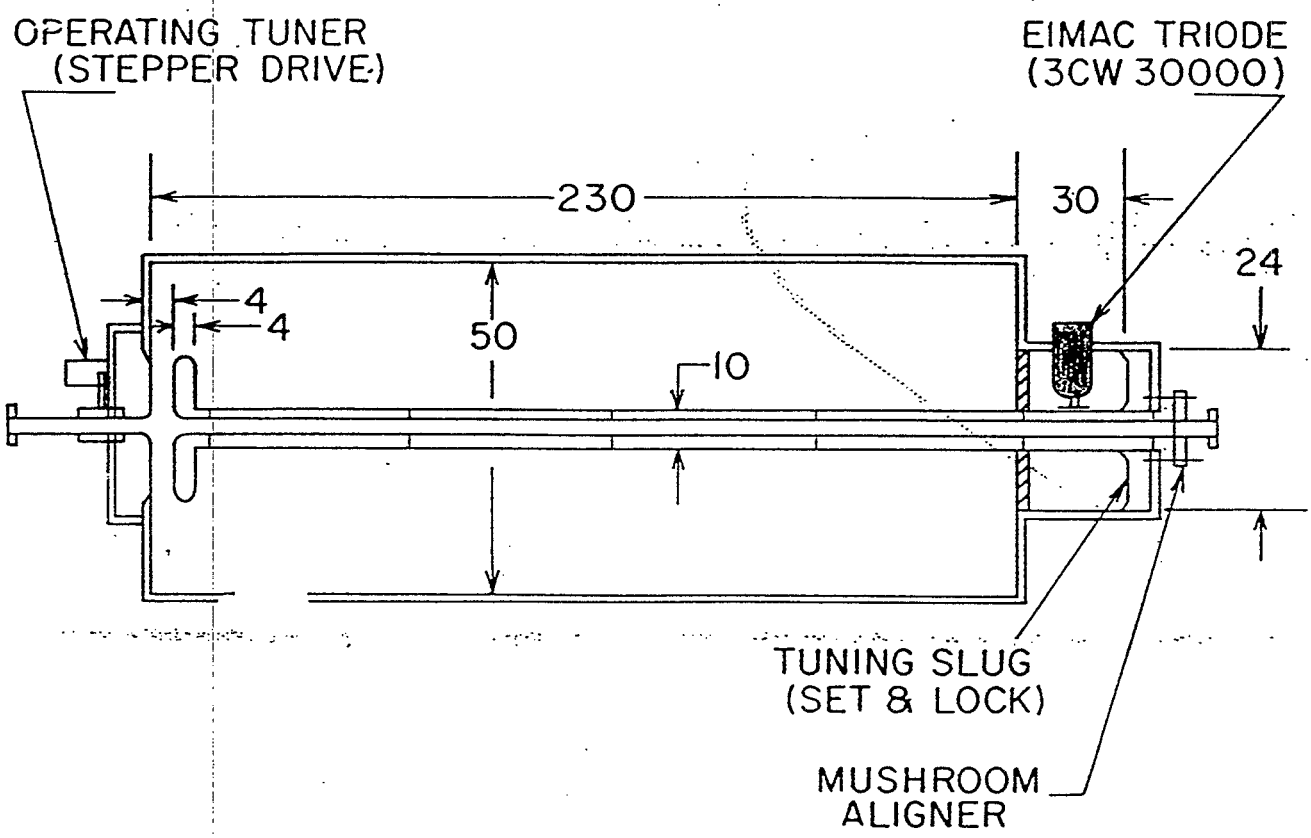
OPERATING TUNER
(STEPPER DRIVE)
EIMAC TRIODE
(3CW 30000)
230
30
24
4
4
50
10
TUNING SLUG
(SET & LOCK)
MUSHROOM
ALIGNER

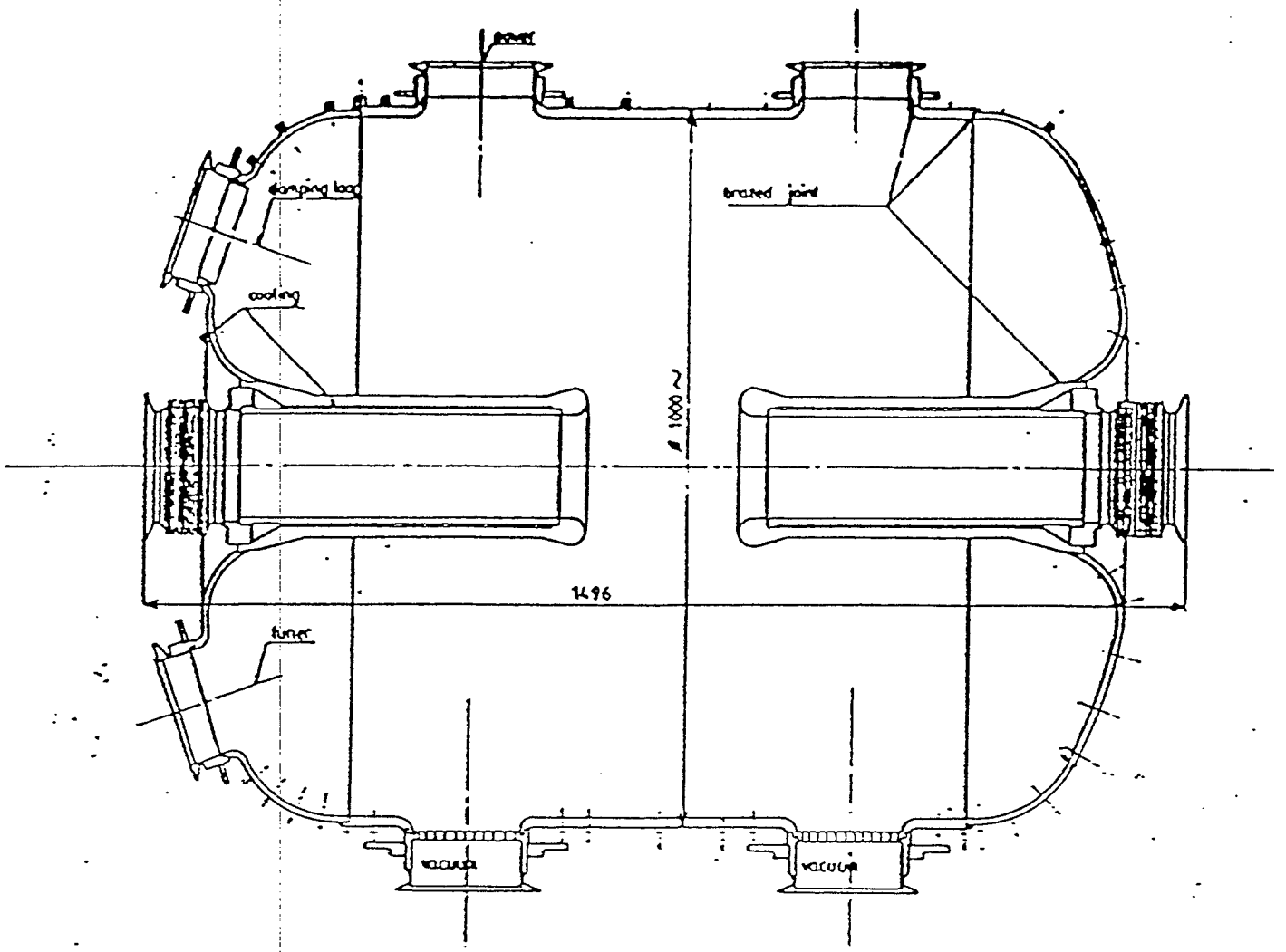


Cross-section of a 100 MHz cavity (SPS)

0 100 200 mm

Design study of a 100 MHz single-cell cavity

for application in the SPS p/pbar collider

G. Rogner

GRAPH PAPER GRAPHIC CONTROLS CORPORATION Buffalo, New York Printed in U.S.A. SQUARE 5 X 5 TO THE HALF INCH AS-0811-GO

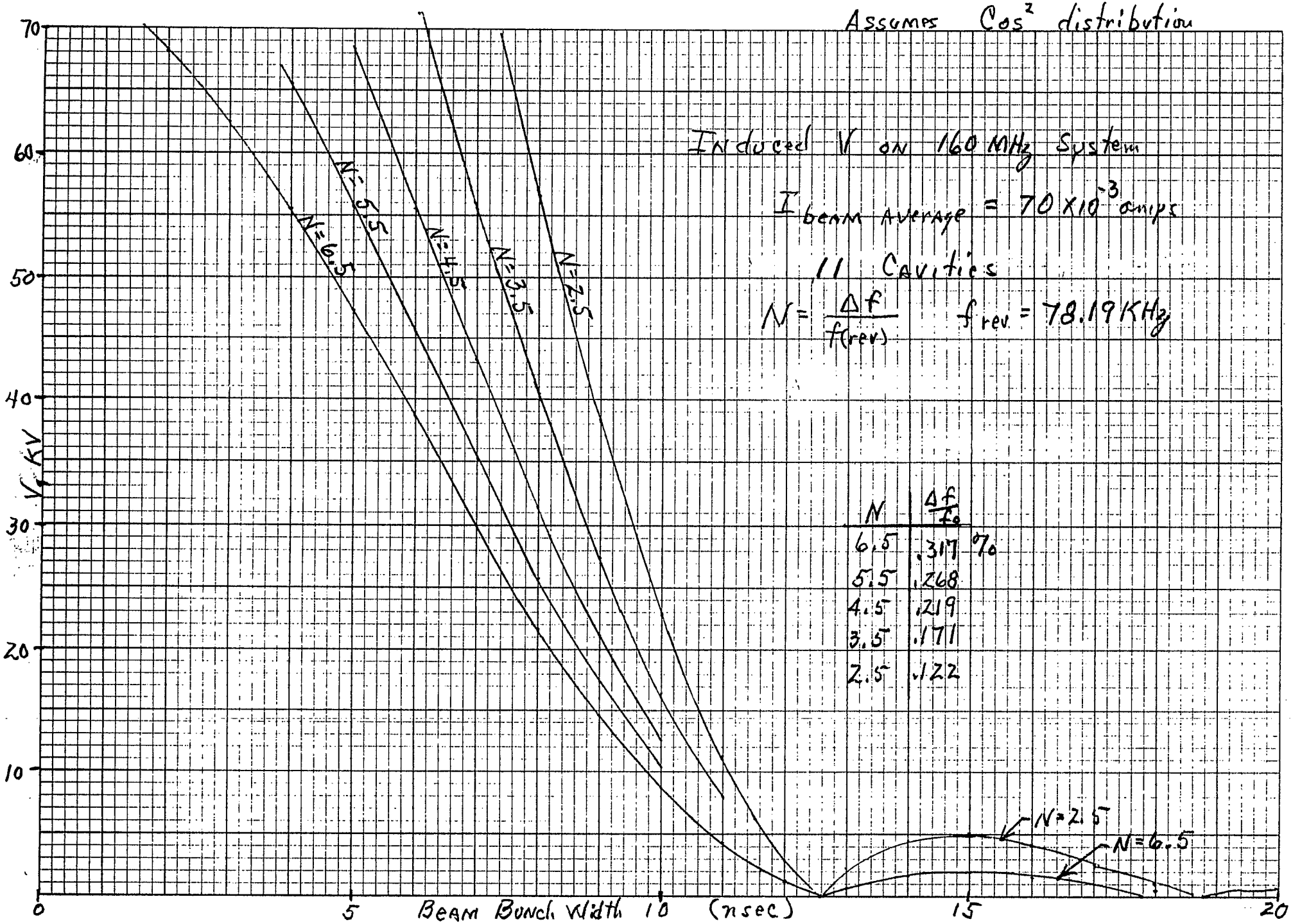


| N | $\frac{\Delta f}{f_0}$ |
|---|---|
| 6.5 | .317 % |
| 5.5 | .268 |
| 4.5 | .219 |
| 3.5 | .171 |
| 2.5 | .122 |

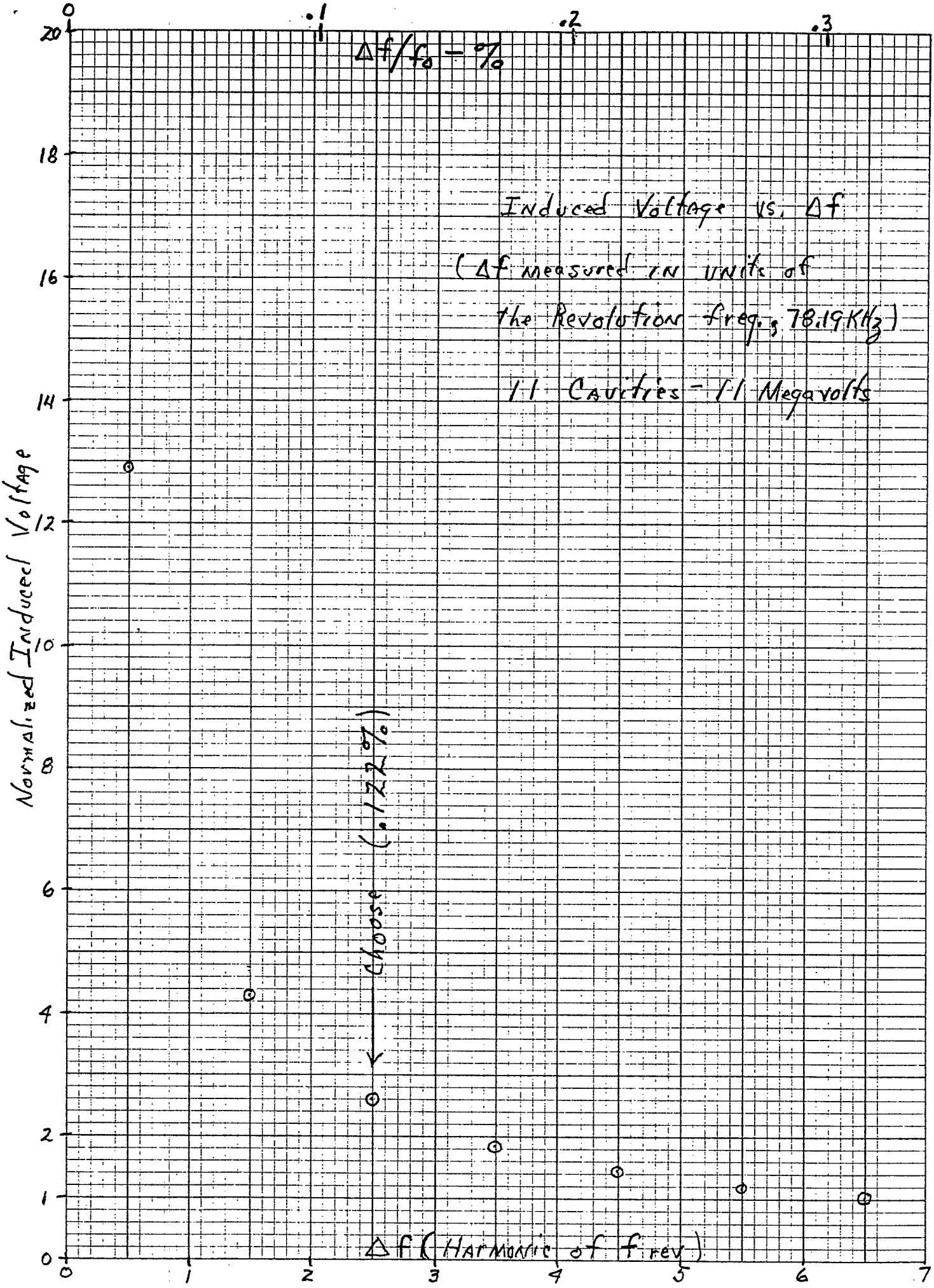


GRAPH PAPER GRAPHIC CONTROLS CORPORATION Buffalo, New York Printed in U.S.A. SQUARE 5 X 5 TO THE HALF INCH AS-0811-60
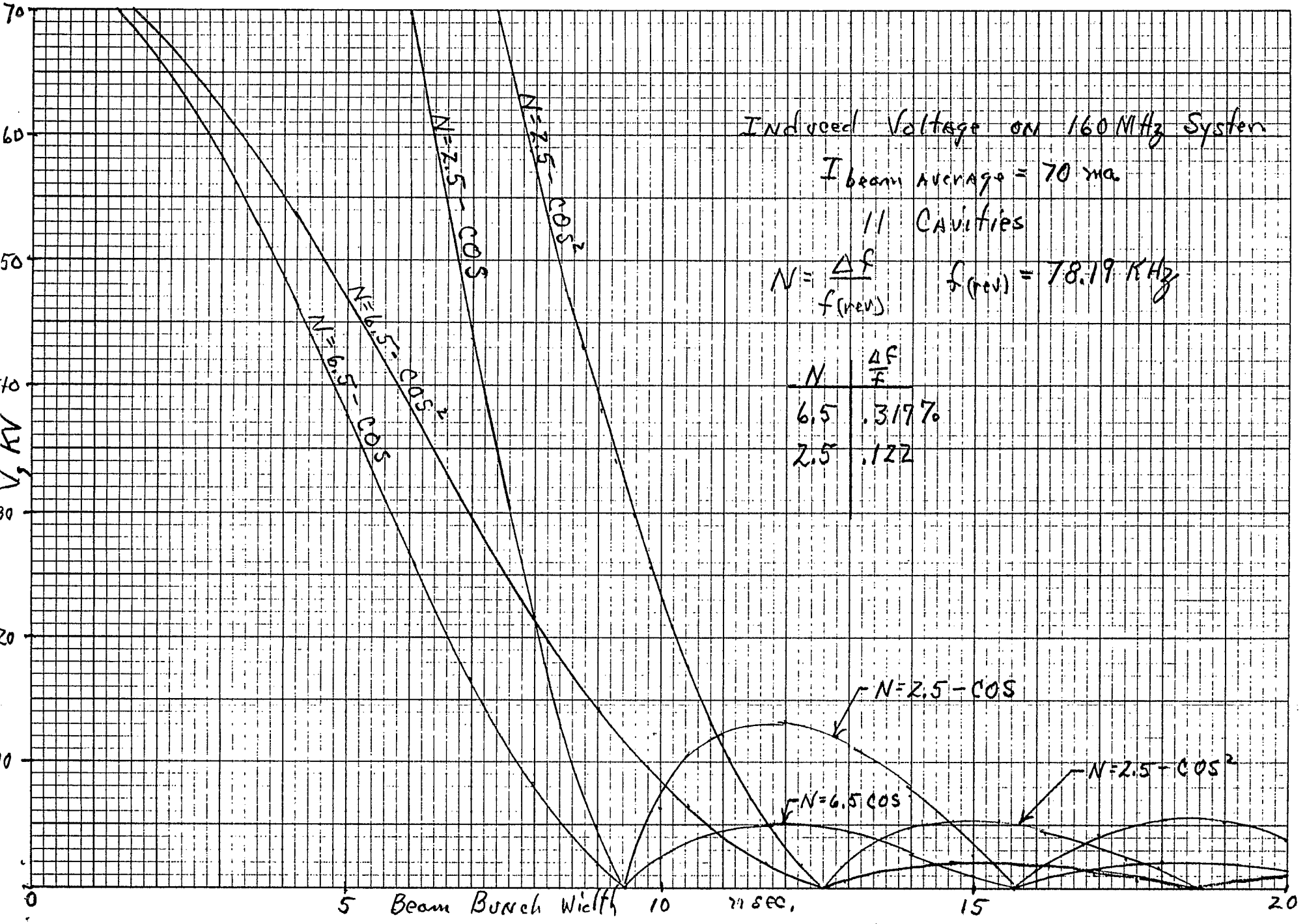
GRAPH PAPER GRAPHIC CONTROLS CORPORATION Buffalo New York Printed in U.S.A. SQUARE 5 X 5 TO THE HALF INCH AS-0811 GO