AD/RHIC/RD-114

RHIC PROJECT

Brookhaven National Laboratory

A Simple Model for Extrapolating Dose from Penetration Exits

A. J. Stevens

June 1997

A Simple Model for Extrapolating Dose from Penetration Exits

I. Introduction

Penetrations of various types exist in shielding used for radiation protection. In some cases the actual exit of the penetration may be inaccessible, but a person may have access to some region off to the side of the penetration. Since the exit is generally "hot", a general concern is how much dose from the exit can "shine" on a region where access is permitted.

This note describes a very simple model for estimating such shine. Two important underlying assumptions, which are not discussed further, are that (1) some means of estimating the dose at the exit of the penetration exists, and (2) that the source of the radiation at the entrance to the penetration is a reasonably diffuse radiation field dominated by low energy neutrons. An example to which the model described below would **not** apply would be a straight penetration pointed directly at a target of high energy proton interactions.

II. The Model

The origin of the model stems from calculations that show that the direction of neutrons emerging from a penetration to be more and more forward peaked as the penetration grows longer. Indeed, this author used such calculations[1] to estimate that a conservative estimate of the excess dose to a person standing next to a typical vent opening on the RHIC collider tunnel is 1/10 of the dose emerging from the vent. This estimate was based on old calculations at CERN[2], which are reproduced below as Fig. 1. What is shown in this figure is calculated neutrons per steradian for two different values of the so-called universal length d.

$$d = \frac{L}{\sqrt{A}}$$

where L is the physical length of the penetration and A the area.

More recently, calculations by this author using LCS[3] have shown, that for larger values of d than in Fig. 1, dose off to the side is so small that computation is very difficult. These results simply quantify to some extent the common sense realization that penetrations act like the barrel of a gun. With this as background, the model proceeds as follows.

Consider the "hole" shown in Fig. 2 with surface area A as an emitter of neutrons (N) into some solid angle Ω. Near the surface of the hole, this emission is described by

$$\frac{d^2N}{dAd\Omega} = g(A,\Omega)$$

Now make the simplifying assumption that this expression is independent of position on the surface, and let f(Ω) be a normalized distribution function such that

$$(1) \qquad \int_{\Delta\Omega_L} f(\Omega)d\Omega = 1 \qquad \text{Then}$$

$$\frac{d^2N}{dAd\Omega} = \frac{N_{Tot}}{A} \times f(\Omega)$$

Here, there is some limit on the solid angle being considered, $\Delta\Omega_L$, and N_{Tot} is the total number of neutrons crossing the surface A. Now $\Delta\Omega_L$ is nominally limited to 2π, the outgoing portion of the total solid angle, but it will become apparent below that the simplicity of the approximation necessitates avoiding polar angles close to 90° . Below we take a polar angle of 75° as the limit.

Now an element dA on the surface causes dose at some distant point R away given by

$$\frac{\frac{d^2N}{dAd\Omega} \times \Delta\Omega \times dA}{2\pi R^2 \sin(\theta)d\theta} = \frac{N_{Tot} \times dA}{A \times R^2} \times f(\Omega)$$

Integrating over A leaves N_{Tot} which is not known. However, by assumption, the dose on A is known which is:

$$D_A = \frac{N_{Tot}}{A \times \langle \cos(\theta) \rangle}$$

where cos(θ) is averaged over the (unknown to this point) polar angle distribution function. This equation shows why 75° was taken as an upper limit in order to avoid "edge effects" which are not taken into account by the model. Eliminating N_{Tot} gives the final expression for the dose at some point R away,

$$(2) \qquad Dose = \frac{D_A \times A \times \langle \cos(\theta) \rangle}{R^2} \times f(\Omega)$$

The only remaining task is to "invent" f(θ). As indicated above, we seek a function which becomes more peaked as the universal length d increases and is assumed isotropic at $d = 0$. The simplest such function imaginable by this author is:

$$(3) \qquad f(\theta) = e^{-\theta/\lambda} \times \cos(\theta) \quad where\ \lambda = \frac{C}{d}$$

where C is some constant, which was determined by roughly fitting the calculation shown in Fig. 1. Fig. 3 shows the fit for C = 1.1. In this case, the function was normalized to the histograms in Fig. 1 between 0 and 75°.

III. Comparison with MCNP Calculation

Quantitatively the model is defined by equations (1) through (3) of the preceding section. The implementation is via a small FORTRAN program where the input is d, A, R, and θ, and the output is the dose relative to D_A =1. Here we compare the model to an MCNP calculation by Preisig[4] which has been used in the past as an estimator for dose external to penetrations. The calculation, whose results are appended here as Fig. 4, was for two side-by-side pipes, each of radius 10 inches, going through a 4 ft. long wall. We have noted before, that these two pipes act as a single pipe of radius ~$\sqrt{2}$ × 10 inches, as regards *transmission* through the wall. This gives d = 1.915. Table 1 below compares the model with the results shown in Fig. 4. Each position is compared to the exit dose which is location 2 in Fig. 4. It is important to note that the area used in the model is the total area of the two holes.

Table 1 Model/MCNP Comparison

Location	Dose Relative to Location 2 (Model)	Dose Relative to Location 2 (MCNP)
3	.059	.053
4	.026	.027
5	.0022	.0044
6	.0037	.008
7	.0037	.008

The model underestimates the off zero degrees dose by about a factor of 2.[5] In view of the fact that model has essentially no information from MCNP,[6] the comparison is regarded as satisfactory, although the results should be multiplied by 2 for off-axis points. In principle, of course, better estimates would be made by using LCS for every geometry. However, this is often not a practical choice.

References/Footnotes

1. A.J. Stevens, "Radiation Field in the Vicinity of the Collider Center," AD/RHIC/RD-77, October, 1994.

2. H.G. Vogt, "Monte Carlo Calculations of the Neutron Transmission Through the Access Ways of the CERN Super Proton Synchrotron," CERN 75-14 (1975).

3. R.E. Prael and H. Lichtenstein, "User Guide to LCS: The LAHET Code System," Los Alamos National Laboratory Report LA-UR-89-3014, September, 1989.

4. Memorandum from A.J. Stevens and J.R. Preisig to S. Musolino dated 2/8/95. Subject: "Estimate of Fault Levels Exterior to the 4 o'clock Enclosure."

5. A part of the difference might be that MCNP takes into account re-scattering off the floor and pipes (see Fig. 4).

6. The only exception is that the MCNP results were used to estimate the universal length *d*. This estimate was based on the observation that the location 2 vs. location 1 results of Fig. 4 are described rather well by using the first leg attenuation formula of Goebel with an effective hole which is $\sqrt{2}$ times a single hole.

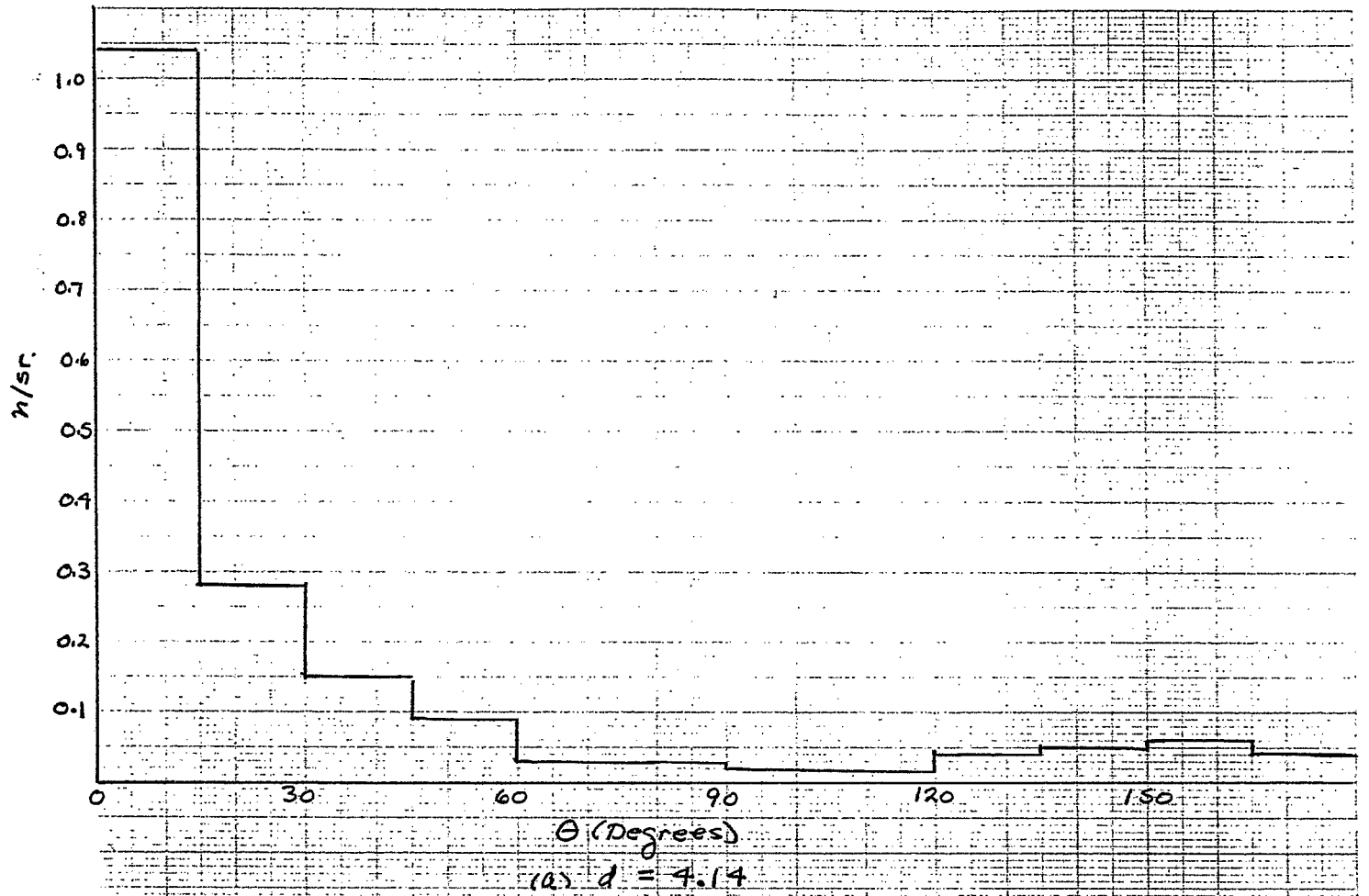

Fig. 1 Neutrons per Steradian vs. Polar Angle for Two Values of d. (From Ref. [2])

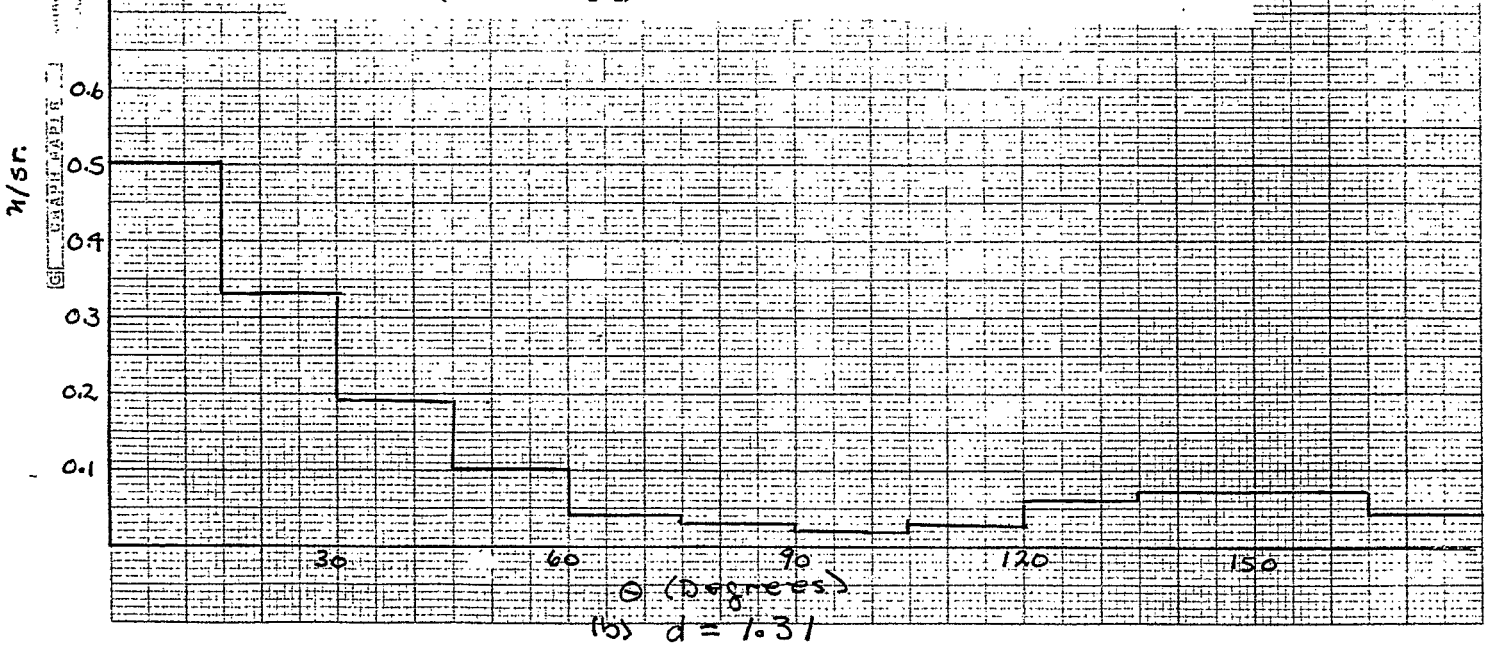

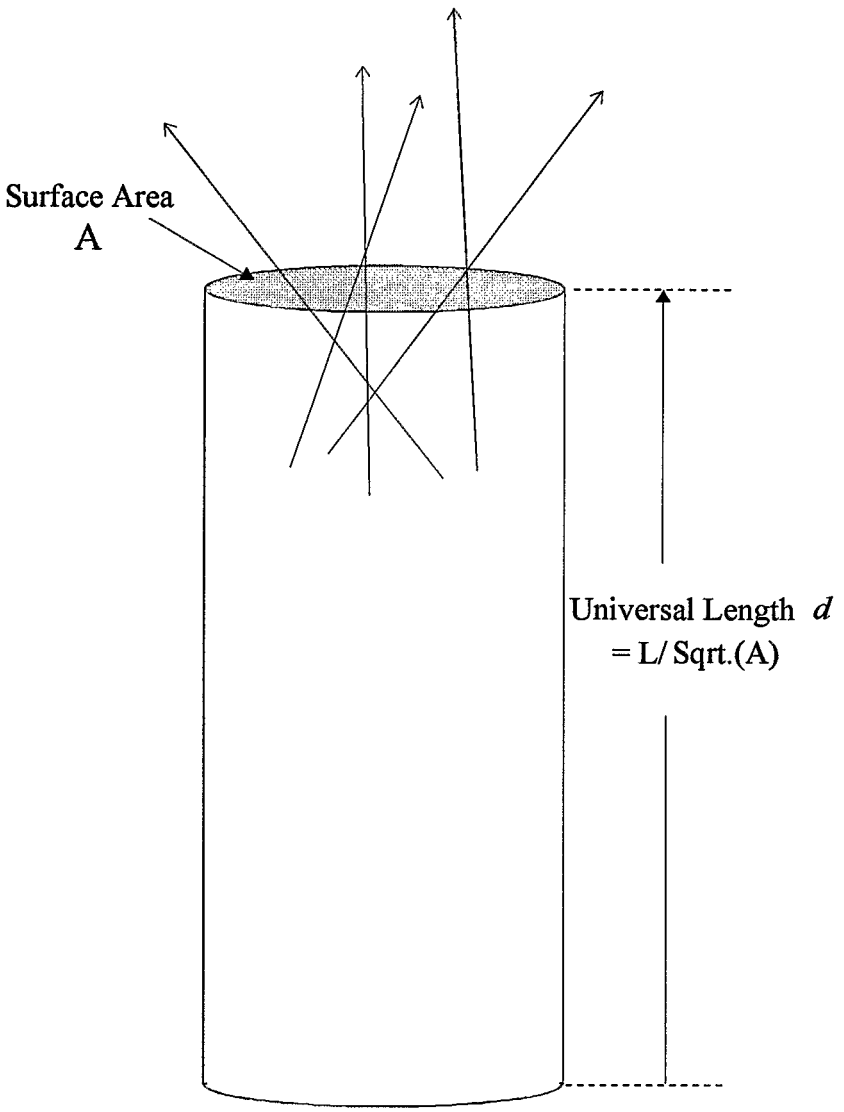

Fig. 2. Illustration of the Radiating "Hole"

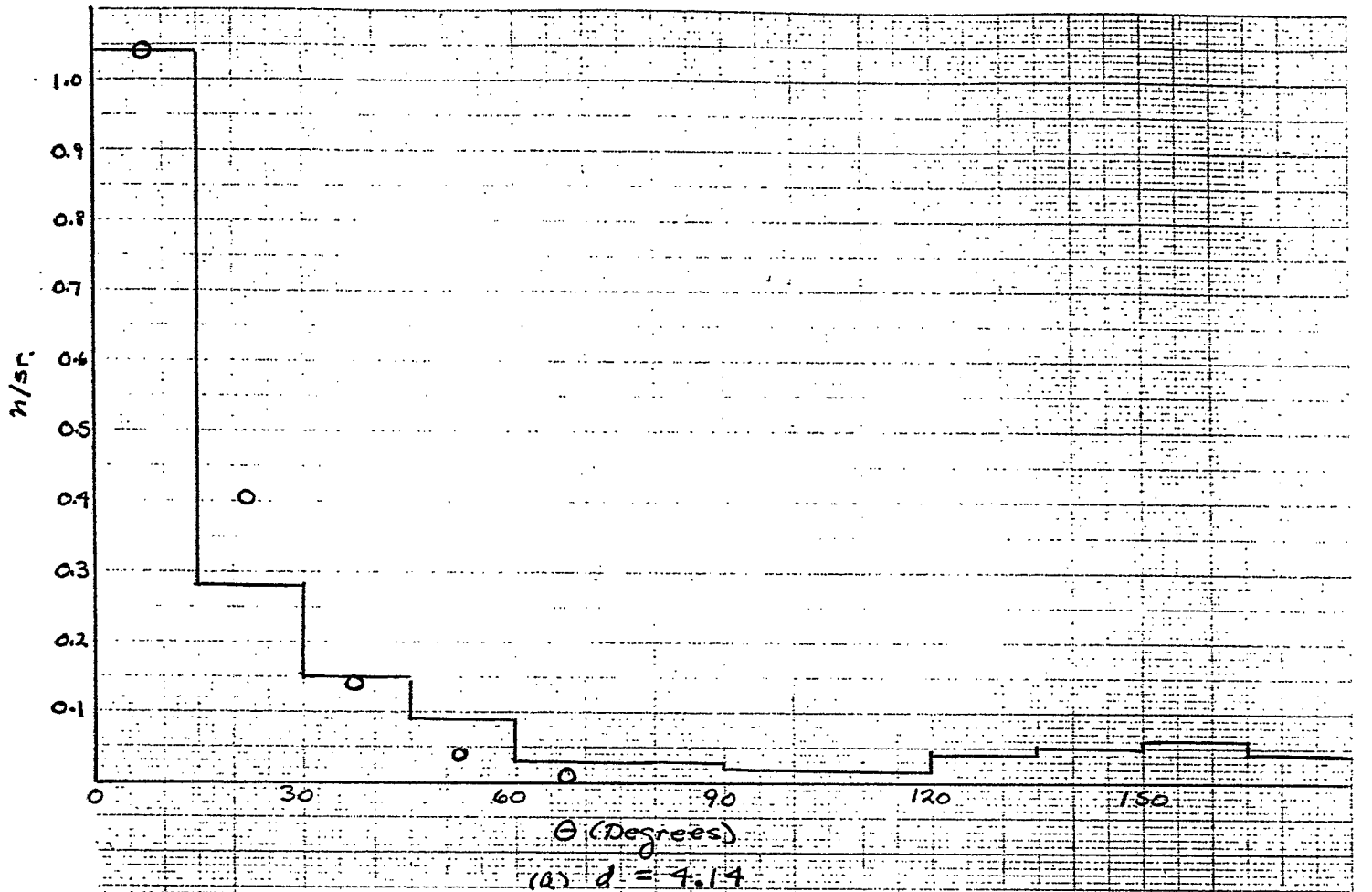

Fig. 3 Reproduction of Fig. 1 with Model "Fit" to 75°

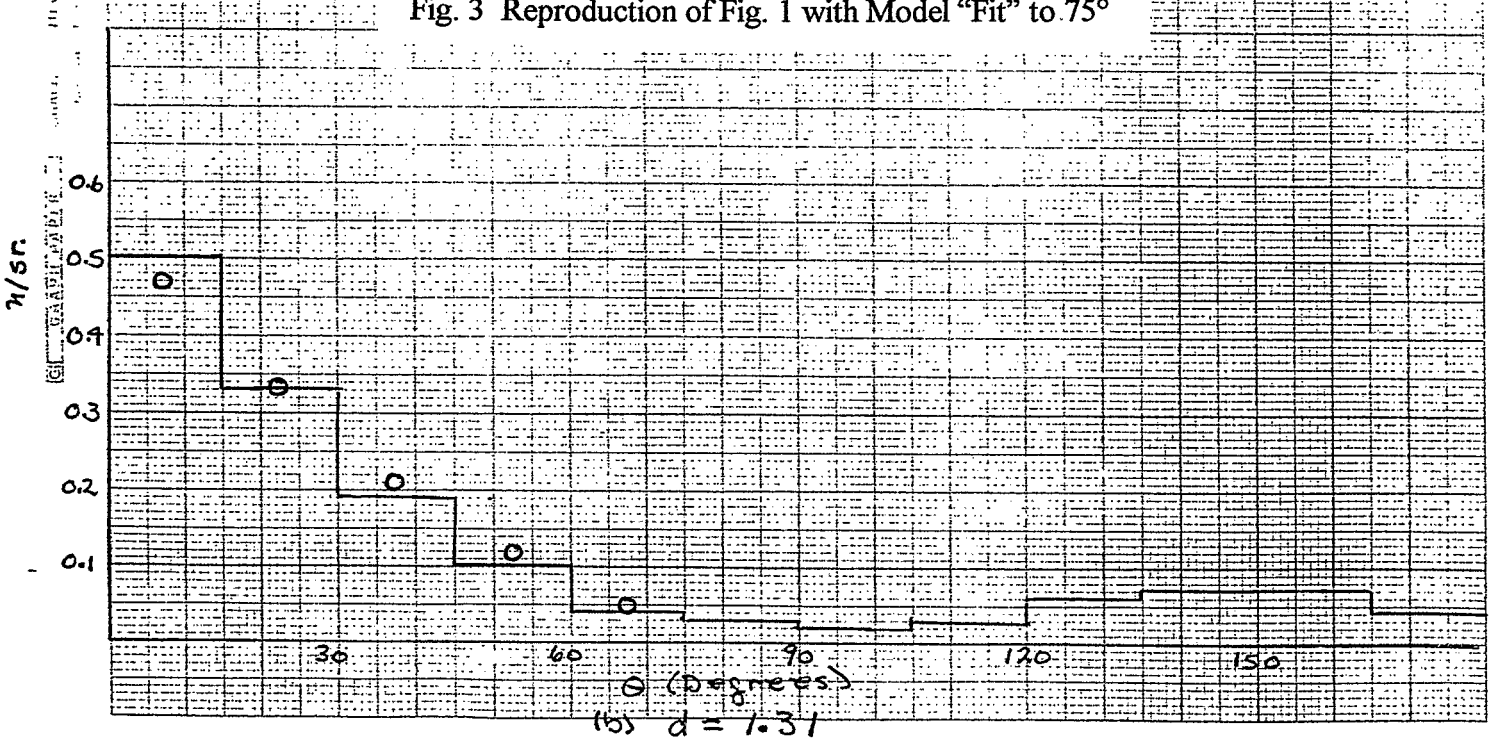

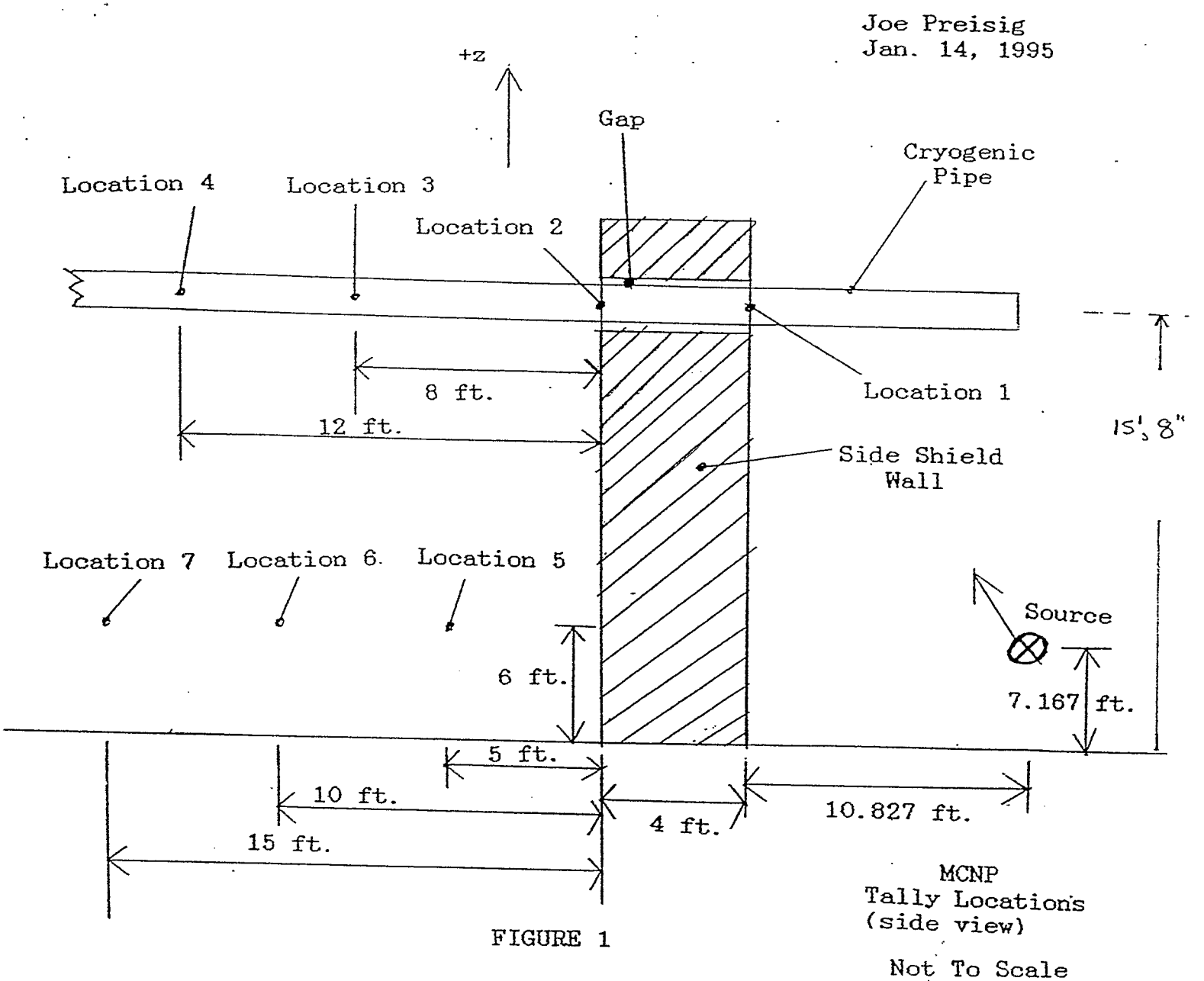

FIGURE 1

TABLE I --- Tallies @ x=0 (i.e. line between the 2 cryo. pipes)

Tally #	Tally [(rem-sec)/hr]/n (& relative error)	rem/n	Location
(Gap Level Tallies)			
5	9.65619×10^{-11} (.0085)	2.68227×10^{-14}	1
35	7.98971×10^{-12} (.0399)	2.21936×10^{-15}	2
55	4.23463×10^{-13} (.0341)	1.17628×10^{-16}	3
75	2.18604×10^{-13} (.0381)	6.07233×10^{-17}	4
(6 foot tallies)			
95	3.48397×10^{-14} (.0660)	9.67769×10^{-18}	5
105	6.37583×10^{-14} (.0396)	1.77106×10^{-17}	6
115	6.45554×10^{-14} (.0312)	1.7932×10^{-17}	7

Fig. 4 MCNP Results from Ref.[4].