AD/RHIC-RD-11

Acceleration of Pb Ions in the CERN SPS

Dr. Krsto Prelec
BNL

ACCELERATION OF Pb IONS AT CERN

FIRST PROPOSAL: R. STOCK, R. BOCK, SEPT. 1986

PRESENT SCHEDULE: SUBMIT PROPOSAL LATE 1988

DECISION: MID 1989

PROJECT LEADER	H. HASEROTH 10/88
SECRETARY (SCIENTIFIC)	U. TALLGREN
SOURCE	C. HILL, R. GELLER
RFQ, LINAC 9/88	M. WEISS, D. WARNER, et a
VACUUM	M. BROUET, A. PONCET
RF	G. NASSIBIAN, C. ZETTLER
BOOSTER SPECS	K. SCHINDL et al.
CONTROLS, INSTRUMENTATION	P. TÊTU, U. RAICH
PS PROBLEMS	R. CAPPI
COORDINATION, GEN. PROBLEMS	H. HASEROTH T.R. SHERWOOD

ABOUT 25-30 PEOPLE, SEVERAL OUTSIDE CONSULTANTS

SO FAR 7 MEETINGS AND 1 WORKSHOP

BNL

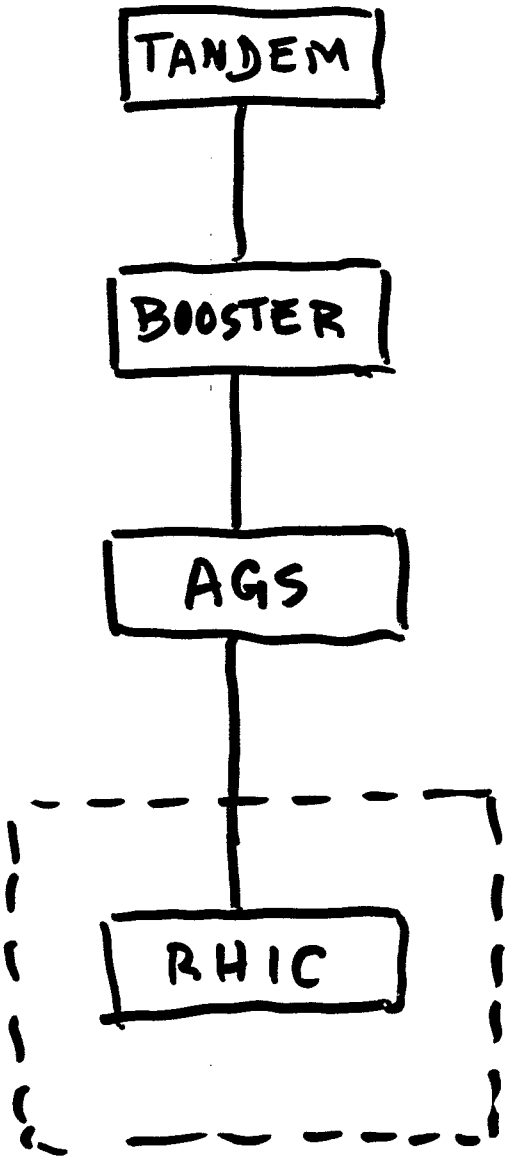

CERN, FIRST PROPOSAL (1986)

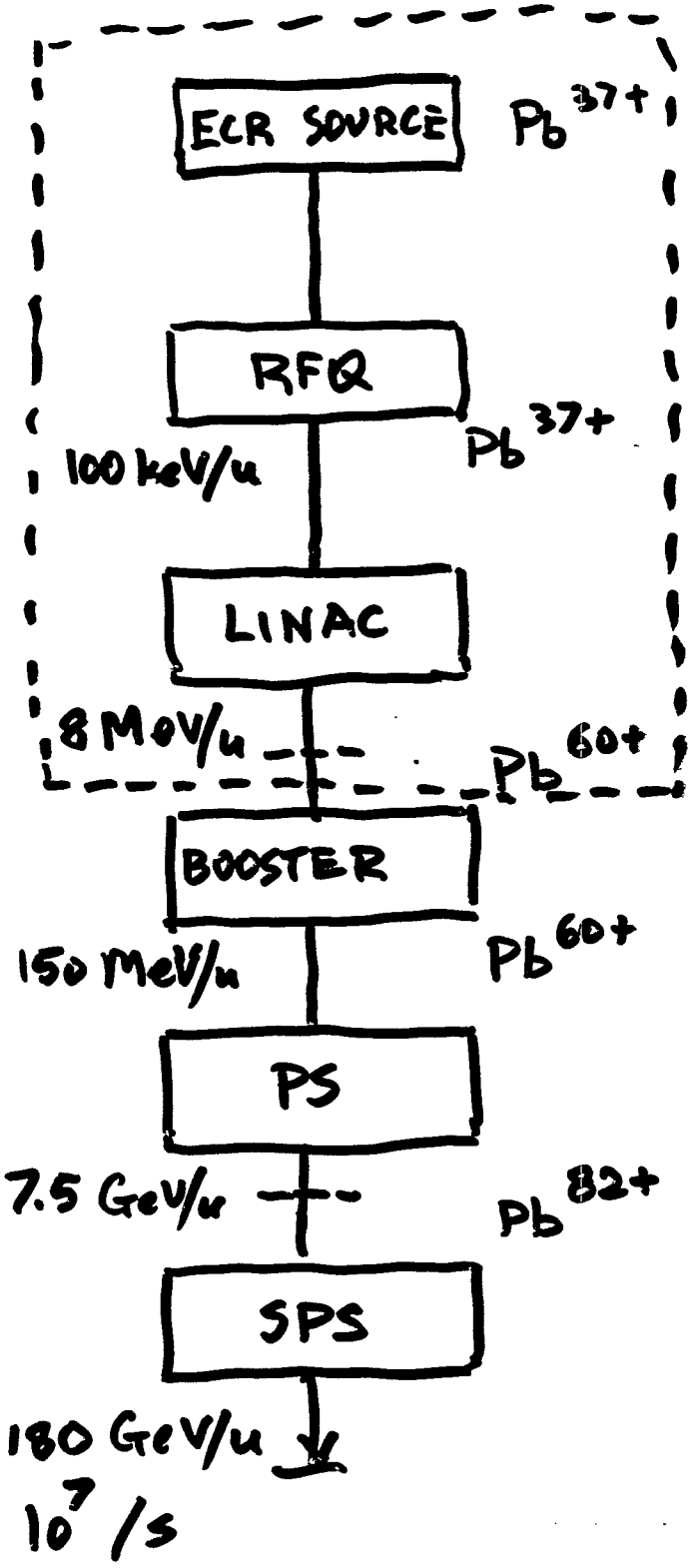

ION SOURCE

REQUIRED

HIGH CHARGE STATE
SUFFICIENT INTENSITY
RELIABLE OPERATION
AVAILABLE WITHIN 3 YEARS FROM OUTSIDE

GENERAL PROPERTIES OF HEAVY ION SOURCES

	SOURCE TYPE	CHARGE STATES	CURRENT	
	"HIGH CURRENT"	LOW	1 – 100 mA	1 YEAR
	PIG	MEDIUM	0.1 – 5 mA	1 YEAR
*	ECR	HIGH	0.01 – 0.5 mA	3 YEARS
	EBIS	VERY HIGH	0.1 – 1 μA	(for 1 Hz) >3 YEARS

SELECTED ION SOURCE : ECR

ASSUMED PARAMETERS :

1986 30 GHz, Pb^{37+}

1987 30 GHz, Pb^{35+}, 30-40 μA
(GELLER, private comm.)

1988 20 GHz, 6 kW,
Pb^{30+}, 30 μA
(GELLER, WORKSHOP 1988)

FINAL DESIGN PARAMETERS Pb^{25+}, 30 μA
(MAY 1988)

ECR ION SOURCES

(GELLER, 1988 CERN WORKSHOP)

EXISTING

10 GHz, 0.5 kW — O^{6+}, 100 μA

15 GHz, 2 kW — S^{12+}, Ar^{13+}, 30 μA

EXTRAPOLATION

20 GHz, 6 kW — Pb^{30+}, 30 μA

REQUIRED: 3 YEARS, 2M $

30 GHz, 3 kW — Pb^{30+}, 30 μA

(UNCERTAIN EXTRAPOLATION)

---

30 μA → 1 pμA → $6 \times 10^{12}\ s^{-1}$ of Pb^{30+}

INJECTION INTERVAL 400 μs

INJECTED # OF PARTICLES 2.4×10^{9}

REPORT ON DUBNA HEAVY ION SOURCES
(SHERWOOD, JUNE 1988)

LASER SOURCE

CO_2 LASER

Li^{3+}, 2×10^{11} part. from Linac
15 μs

C^{6+}, 10^{12} from source
2×10^{10} from Linac
3 μs

Mg^{12+}, 10^{9} from Linac, after stripping

A CRATER FORMS AFTER ≈ 1000 PULSES

EBIS SOURCES

- OPERATING SOURCE 10^{11} CHARGES / PULSE
  (FOR Pb^{30+}, ≈ 10^{9} PART. / PULSE)
- SOURCE FOR ATOMIC PHYSICS — FULLY STRIPPED Xe (LOW INTENSITY)
- TEST BENCH SOURCE, HOPE: FULLY STRIPPED U

RFQ AND NEW LINAC

LOW ENERGY END: Pb^{30+} INJECTED FROM THE ECR SOURCE

FINAL: Pb^{25+}

TRANSFER: 0.25 MeV/u

HIGH ENERGY END: Pb^{30+} BEAM STRIPPED AND INJECTED INTO PSB

TWO REQUIREMENTS TO BE SATISFIED SIMULTANEOUSLY

- OUTPUT ENERGY (FROM LINAC) AND CHARGE STATE AFTER STRIPPING SHOULD MATCH THE EXISTING TRANSFER LINE RIGIDITY WITHIN 10%

- OUTPUT ENERGY SHOULD BE MATCHED TO THE OPTIMUM CHARGE STATE IN FOIL STRIPPER

LENGTH!

CONSEQUENCE: FIRST PROPOSAL FOR INJECTION OF Pb^{60+} AT 8 MeV/u INTO PSB HAD TO BE CHANGED BECAUSE IT WOULD REQUIRE 40% HIGHER RIGIDITY

RFQ AND LINAC CONSIDERATION

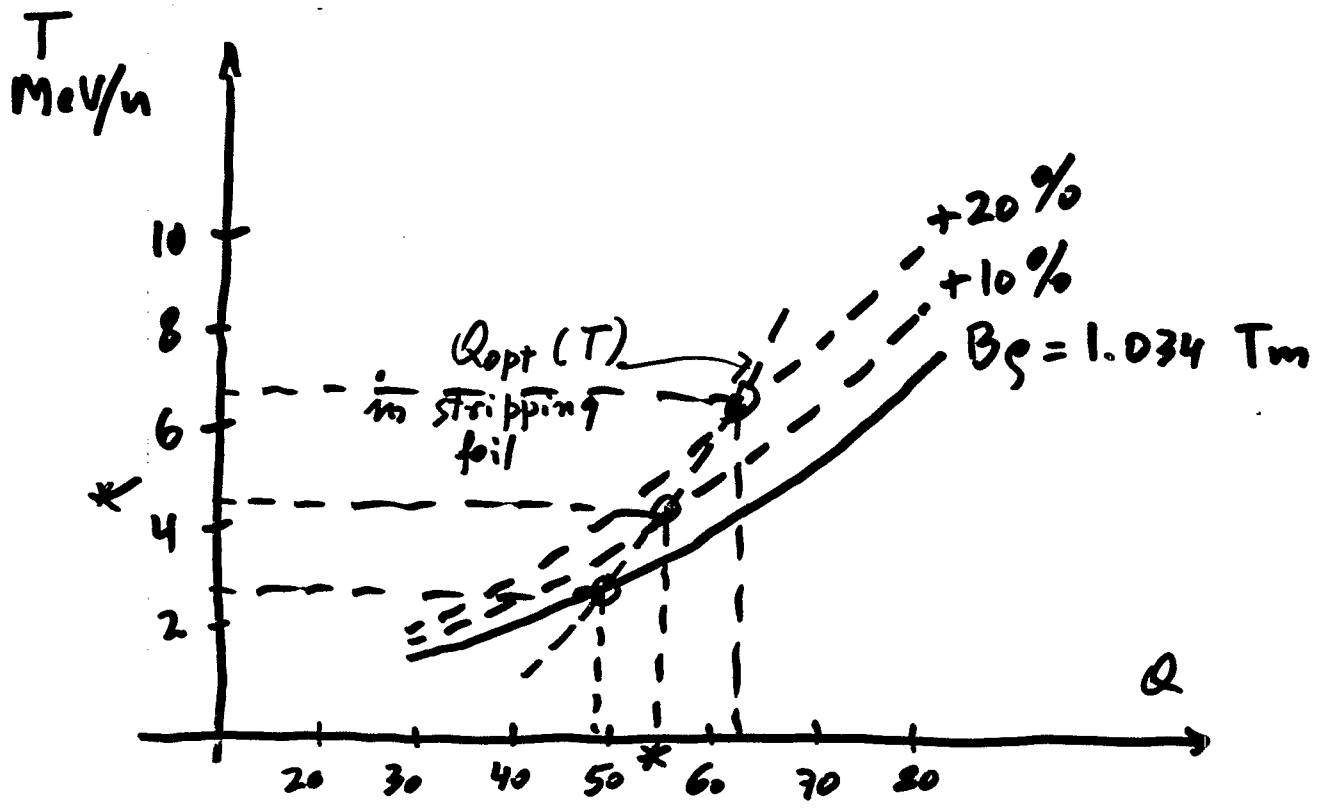

DESIRED: • AS HIGH A CHARGE STATE AS POSSIBLE TO INCREASE SPS INJECTION ENERGY AND REDUCE # OF HARMONIC JUMPS

SELECTED: • LINAC OUTPUT ENERGY 4.2 MeV/u
INJECTION LINE RIGIDITY 1.034 + 11%
CHARGE STATE 53+
(WHY NOT 54+ ?)

TO BE DECIDED: RFQ DESIGN (NOT A PROBLEM)
TYPE OF LINAC

TRANSMISSION IN THE PSB

PRESENT VACUUM 3×10^{-8} torr

IMPROVED VACUUM 10^{-9} torr
(400 - 700 kSFr)

MANY STUDIES ON TRANSMISSION LOSSES DUE TO CAPTURE / LOSS OF ELECTRONS

FRANZKE (GSI)
BARON (GANIL)
GOULD (LBL)

MOST RECENT RESULTS FOR Pb^{30+} (TRANSMISSION)

	GSI		LBL	
	SLOW	FAST	SLOW	FAST
10^{-9} torr	77%	83%	68%	76%

SELECTED : CAPTURE WITH $h = 17$
DEBUNCH, REBUNCH $h = 10$

INJECTION 4.2 MeV/u
EJECTION 96 MeV/u

TRANSMISSION IN THE PS

INJECTION ENERGY DETERMINED BY THE TRANSFER LINE RIGIDITY

$T = 96$ MeV/u

CAPTURE

$h = 20$

(TWO BOOSTER BUNCHES PER PS BUCKET)

Pb^{53+}

PRESENT VACUUM 5.3×10^{-9} torr

	GSI		LBL	
	SLOW	FAST	SLOW	FAST
PS	67 %		67 %	
PSB + PS	52%	56%	46%	51%

IMPROVED VACUUM 8×10^{-10} torr

	GSI		LBL	
	SLOW	FAST	SLOW	FAST
PS	94 %		94%	
PSB + PS	72%	78%	64%	71%

ACCELERATION IN SPS

INJECTION ENERGY LIMITED BY $(B\rho)_{min}$ IN SPS

AND BY $(B\rho)_{max}$ IN PS FOR 1.2 s CYCLE.

ALSO, γ_{tr} SHOULD BE AVOIDED ($\gamma_{tr} = 6.1$)

TENTATIVE PARAMETERS:

INJECTION ENERGY	4.16 GeV/u
ONE HARMONIC JUMP	
FREQUENCY SWING	0.5%

ESTIMATED SPS INTENSITY

SOURCE OUTPUT 30 μA OF Pb^{25+}

OF IONS LEAVING THE SOURCE, PER SPS PULSE

$$N = \frac{4 \times 30 \times 10^{-6} \times 400 \times 10^{-6}}{1.6 \times 10^{-19} \times 25} = \underline{1.2 \times 10^{10}} \text{ Pb IONS}$$

4 PS PULSES PER SPS PULSE

TRANSMISSION LOSSES

	RFQ	0.9
	LINAC	0.9
I.	STRIPPING	0.16
	PSB	0.35
	PS	0.7
	SPS	0.4
		1.27 %

SPS INTENSITY : $\underline{1.5 \times 10^{8}}$ / pulse

USER REQUEST : 5×10^{7} / pulse

cf. OXYGEN 1.6×10^{9} PEAK, 1.2×10^{8} AVERAGE

SULPHUR 5.6×10^{7} PEAK, 10^{7} AVERAGE