AD/RHIC/RD–109

RHIC PROJECT

Brookhaven National Laboratory

RHIC Injection Kicker Design Studies

H. Hahn, N. Tsoupas and J. E. Tuozzolo

January 1997

RHIC INJECTION KICKER DESIGN STUDIES

H. Hahn, N. Tsoupas and J. E. Tuozzolo

I. INTRODUCTION

Injecting beam from the AGS to RHIC is performed by single-bunch transfer. The RHIC injection kicker system provides a vertical deflection of 1.86 mrad for beams with a B ρ =100 Tm. The available free space for the four kickers limits their effective length to 1.12 m each. Neglecting any contribution from the electric field, the deflecting magnetic field is required to be 415 G inside the beam tube. This leads, with the horizontal aperture of 4.84 cm, to the current requirement of 1.6 kA. The magnetic field then becomes 2.13 kG in the back leg ferrite.

The kickers will be powered from a Blumlein pulser which is designed for 50/2 Ω, imposing a characteristic impedance of 25 Ω and the nominal voltage of ~40 kV in the kicker. The bunches are assumed to be <15 nsec long. The rise time requirement of <95 nsec in deflection or ~45 nsec in current suggested the adoption of a transmission line structure.

Using a CERN-type "plate-kicker" is the quasi-standard solution to achieve fast rise times.[1] Replacing its lumped capacitors by high-permitivity ceramic blocks promised to be simpler, more compact, and thus more economical. Following concepts contemplated at SLAC,[2,3] the original design for the RHIC injection kicker was generated by Forsyth, et al.[4] The kicker R&D program was started in FY 93 with the results from half-length models demonstrating the viability of this solution. However, it was evident that the specifications for the RHIC kicker are at the limit of what can be expected from this type of kicker and that small design changes would be required to provide an adequate safety margin of ~20%. A modified design of the kicker core and the development of special tooling and fabrication procedures then made the production of full-size kickers for operation in the "Sextant Test" in December 1996 possible. In Fig. 1 the geometry of the two kicker versions is shown.

In this report, computational studies directed at reducing the electric peak fields, without significant reduction of the capacitance and concomitant increase of the characteristic impedance, are presented. The computations always preceded changes to the configuration of test models and typically were initiated in response to engineering problems or to interpret unexpected test results. With the aid of an electrostatic computer program, a design with minimal field enhancements was

---

[1] D. Fiander, Proc. 1971 Particle Accelerator Conf., Chicago, Ill., in IEEE Trans. Nuclear Science, NS-18, p. 1022 (1971).

[2] F. Bulos & A. Odian, Report SLAC-PUB-3453, CN-279, (1984).

[3] R. Cassel (private communication).

[4] E. B. Forsyth, G. C. Pappas, J. E. Tuozzolo, & W. Zhang, Proc. 1995 Particle Accelerator Conf., Dallas, TX, p. 1921.

obtained. As a result, the production of the full-size kickers for the Sextant Test became simply a question of proper tooling, fabrication procedures, and quality control.

In the last section of this report, additional modifications in the kicker geometry to further simplify fabrication and increase the safety margin against voltage breakdown are mentioned. Depending on the experience with the Sextant Test, reduction of the kicker characteristic impedance by using larger dielectric blocks or materials with higher permitivity may have to be considered.

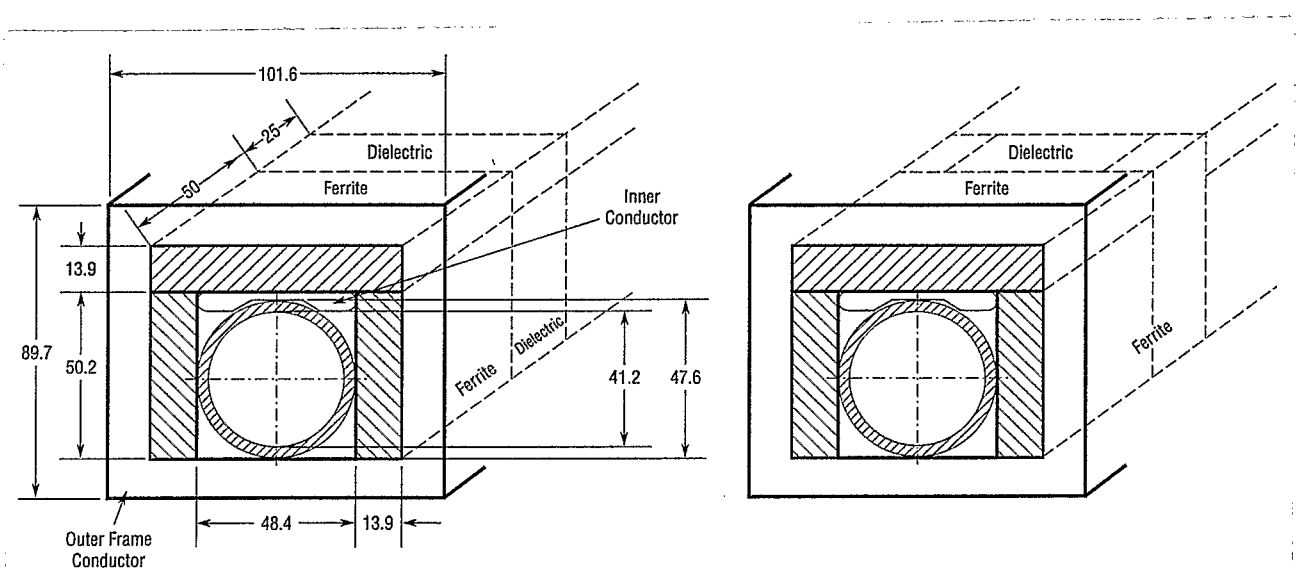

Fig. 1. Geometry of original (left) and present (right) RHIC injection kicker design.

II. KICKER CONFIGURATION

The original design for the half-lengths models is shown in Fig.1 on the left and the present one for the sextant test (internally known as Hybrid-1.85) is on the right. The main problem encountered in the original design was electric breakdown which fractured the dielectric blocks at voltages above ~40 kV. In addition, the original kicker exhibited sharp coupling impedance resonances in the GHz region, which in the present version were eliminated by omitting the dielectric blocks from the sides at the expense of a characteristic impedance increased from 25 to ~28 Ω.[5,6]

The kicker is configured as a "C" magnet with interspersed ferrite[7] and dielectric[8] blocks as shown in above Figures. The design objective of 40 kV across the 1.39 cm thick blocks results in a nominal field of 29 kV/cm. This is below published values, ~60 kV/cm for similar materials such as sintered titania-rutil,[9] or barium titanate. [10] However, the manufacturers of these materials provided no information (or warranty) as to their electric breakdown limits. Thus, prior to their assembly, all incoming blocks were tested in Fluorinert between parallel plates to 60 kV with millisec pulses. The test voltage for the dielectric and ferrite blocks is thus 50% above the nominal design requirement. There is reason to assume, that higher fields can be reached with nanosec pulses, especially in the ferrite where eddy currents play an important role. Nevertheless, the test results showed that it is important to adopt a design which minimizes the local field enhancements.

The nominal electrical field of 29 kV/cm is also significantly below the reported electric breakdown strengths of epoxy and RTV (~300 kV/cm).[11] Epoxy is used to form the magnet core consisting of the ferrite/ dielectric blocks with the busbar (i.e. the inner conductor), and RTV is used in the final assembly of the core into the frame. However, due to the large ratio of $\epsilon_{diel}/\epsilon_{epoxy}$ ~30, correspondingly larger fields can exist in an epoxy layer over the dielectric and must be avoided. Prior to its final assembly the kicker core is machine-ground with a diamond wheel to remove any epoxy from the surface and assure direct contact via an indium layer with the frame.

---

[5] H. Hahn and A. Ratti, BNL Report AD/RHIC/RD-105 (1996).

[6] H. Hahn. M. Morvillo and A. Ratti, BNL Report AD/RHIC/RD-95 (1995).

[7] CMD-5005 (Nickel-Zinc ferrite with high permeability and resistivity for use at frequencies up to ~100 MHz and a dielectric constant of ϵ ~10) by Ceramic Magnetics, Fairfield, NJ.

[8] MCT-100 (sintered mixture of Magnesium Titanate and Calcium Titanate with high dielectric constant ϵ ~100) by Trans-Tech, Adamstown, MD.

[9] Gmelins Handbuch - Titan, vol. 41, p. 250 (Verlag Chemie, Germany 1951).

[10] B. Ritscher, Valvo Berichte, vol. VIII-4, p. 110 (1962).

[11] F.B.A. Fruengel, "High Speed Pulse Technology," (Academic Press, 1980), vol. 1, p. 12.

Kapton has a singularly high breakdown strength (~2.8 MV/cm) [10] and a few 4-mil kapton layers can hold the entire voltage. However, an inserted Kapton layer will increase the characteristic impedance of the magnet by about 1 Ω per mil of the layer thickness. Tests were made with four 4-mil Kapton layers over the dielectric blocks, which in small samples yielded a breakdown limit of >60 kV, but this was not reproducible in the half-length models, presumably due to air between the Kapton layers. The excellent properties of Kapton are utilized in the kicker ends to protect RTV and epoxy interfaces.

III. ELECTROSTATIC COMPUTATIONS

Electrostatic computations using the OPERA-2d program were performed to establish the peak electric fields and their location in the core. The computations are two-dimensional and static, the knowledge of the material properties is limited, and thus their experimental verification is mandatory. Nevertheless, the results of these computations did serve as guide in the search for a solution which minimizes the peak fields while retaining a maximum of capacitance.

The design was optimized by focussing on the geometry of the dielectric block and the details of its contact with the bus bar, established by a 4 mil indium layer. The obvious ideal condition is a dielectric block between two infinite parallel plates, but finding the best approximation required numerous computations and their experimental verification by tests on almost a dozen half-length models. Tests were done with all-ferrite cores, as well as magnet cores with dielectric blocks ranging from 1.5 to the original 3 in. width while maintaining the same overall dimensions and bus bar geometry.

At sufficiently low frequencies where the wavelength is large compared to the cell dimensions, the kicker can be considered as a lossless transmission line with quasi-uniform, albeit anisotropic medium.[12] In this approximation, which is applicable in the frequency range, from 3 to ~30 MHz, required to transmit the fast-rise time pulse, the fields are essentially transverse and can be approximated by TEM modes in each cell section. The boundary conditions of the time-varying electric components of the TEM mode are identical to those of two-dimensional static electric fields. Thus the electrostatic field computations with the OPERA-2 program provide correct results for the pulsed electric fields at the center of the blocks, and a good approximation over a large fraction of the blocks. However, the fields at the ferrite-dielectric interface are 3-dimensional and have been addressed by separate computations.

Sharp metal edges cause a theoretical singularity, and accurate results require a mesh with large number of nodes, their number being limited to 44,000 by the program. The mesh was arranged so that at critical locations the node spacing was ~1 μm. With some care in the choice of the mesh, the relative strength of singularities can be estimated and used as criterion. Thus, in spite of these limitations, the computational results from the OPERA-2d program can be used to locate field enhancements and serve as guide in optimizing the kicker geometry.

---

[12] H. Hahn and E. B. Forsyth, EPAC 1994, London, vol. 3, p. 2250.

IV. COMPUTATIONAL RESULTS

Equipotential and electric flux lines were computed with the OPERA-2d program at cross sections through the center of the dielectric and ferrite blocks and are shown in Fig. 2 through Fig. 5. The field enhancement, at critical locations, i.e. peak field normalized to the nominal value of 29 kV/cm, is summarized in Table I. for the cross sections shown in these figures. It is to be noted that the presence of the ceramic beam tube has a minimal effect on the peak fields in the core. The reduction of the field enhancement in the present design is evident.

In addition, a select number of three-dimensional computations were performed in the ferrite-dielectric interface region, using the OPERA-3d program. Here, a 0.5 mm thick epoxy layer was inserted between the ferrite and dielectric blocks, each taken as 5 mm thick. The electric field components on a line in beam direction through the blocks at the location of the peak field is shown in Fig. 6. The results confirmed the assumption, that the disturbance due to the epoxy layer is highly localized and the fields are essentially two-dimensional in the blocks. The 3-dimensional peak field enhancement in the dielectric blocks of the present design were found to be 3.5 at the corner versus the 2.2 (or 1.98 in Table 1 from 2-d computations) at the center.

Table I. Electric Field Enhancements

Figure No.	Material, ϵ Top/Side	Field Enhancement: In Block Top/Side	Field Enhancement: In Epoxy Top/Side	C (pF/cm)
		ORIGINAL DESIGN ($Z_C = 25.8\ \Omega$)		
2	100/100	40.1/0.66	41.6/14.3	36.3
5	10/10	13.9/1.44	13.3/5.6	4.9
		PRESENT DESIGN ($Z_C = 28.6\ \Omega$)		
3	100/10	1.98/1.37	19.8/5.23	32
4	100/10	1.98/1.37	19.8/5.25	32 w/o beam tube
5	10/10	13.9/1.44	13.3/5.6	4.9

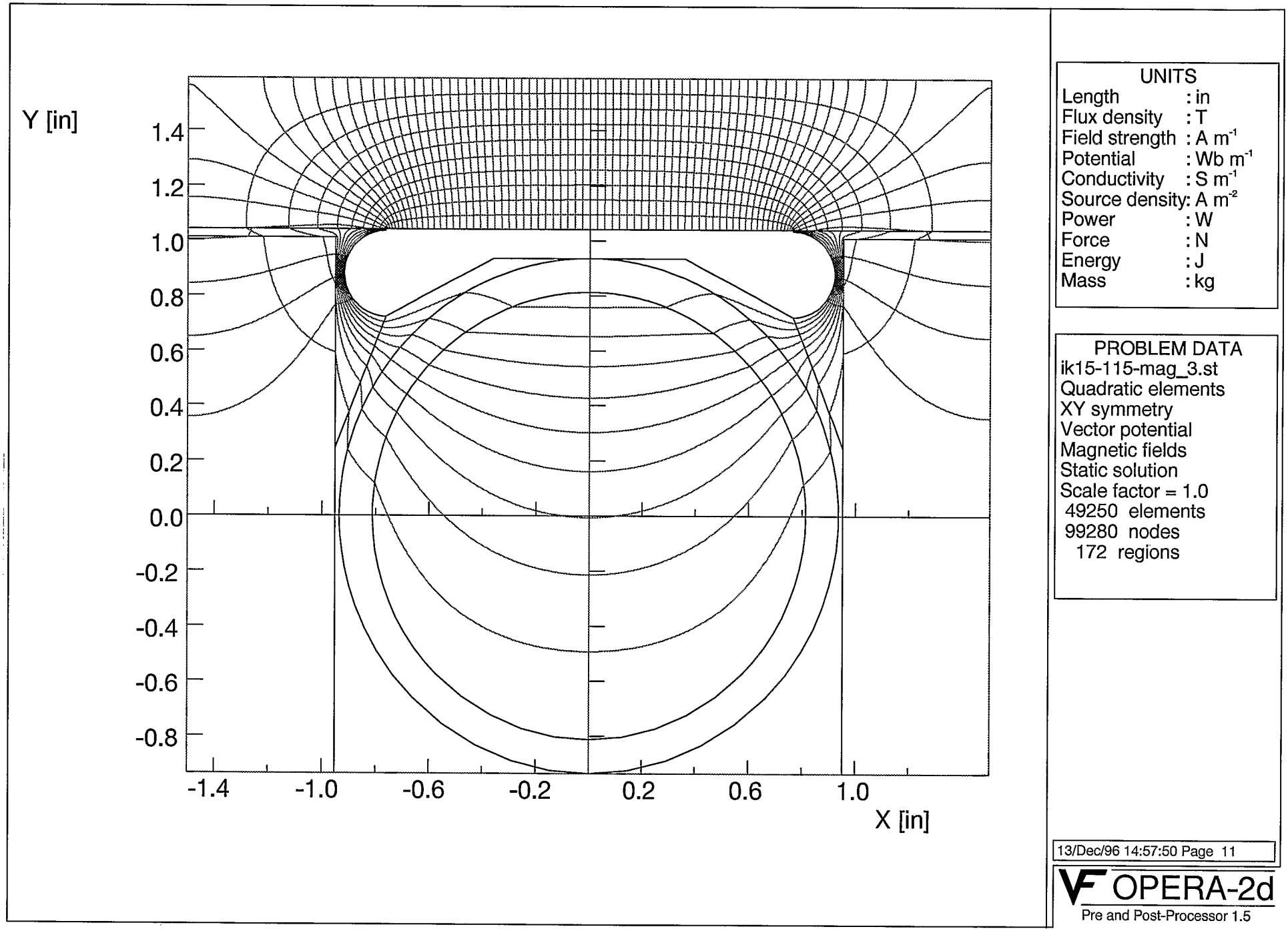

Fig. 2. Electric field in a cross section at the dielectric blocks of the original design.

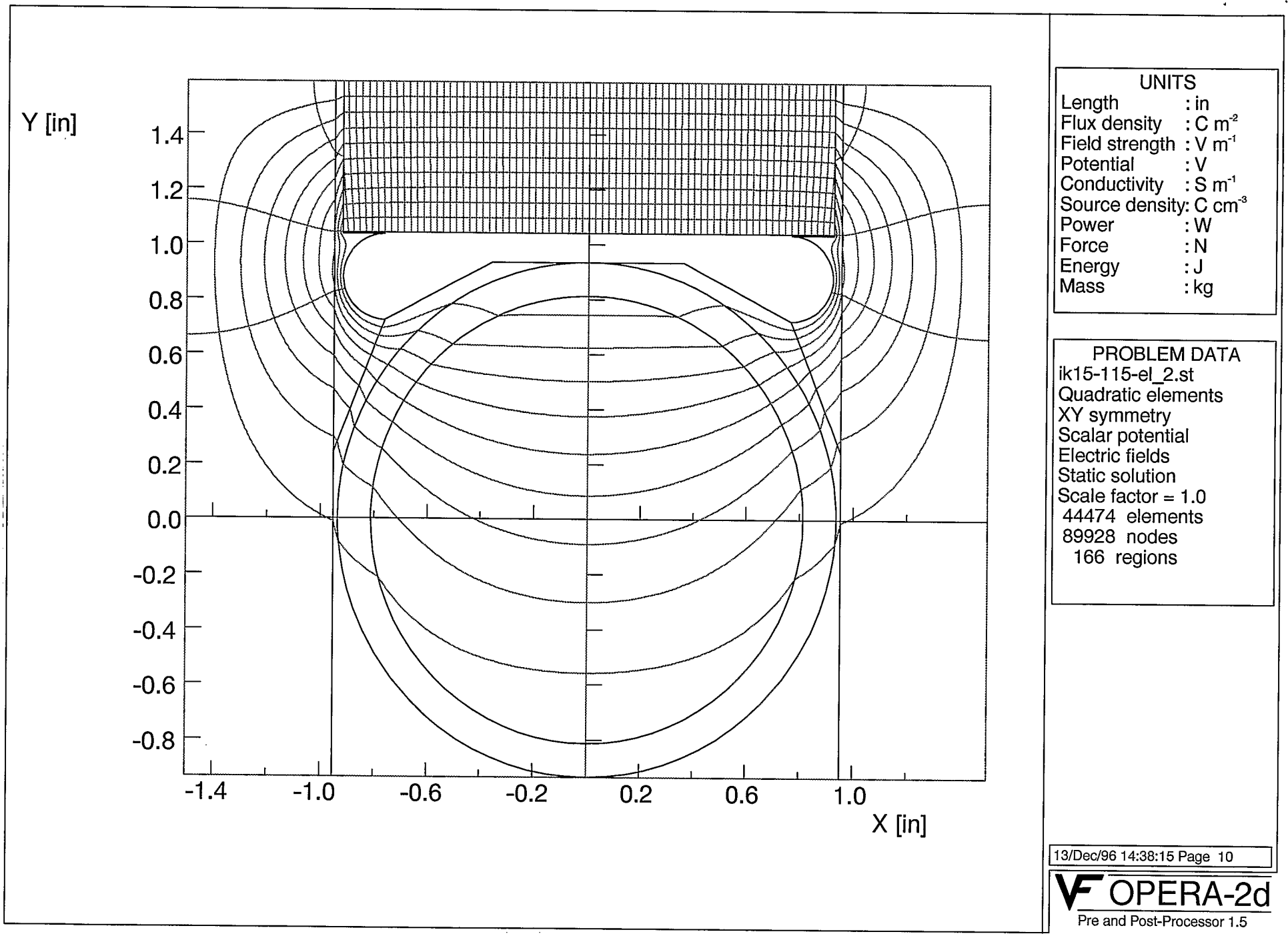

Fig. 3. Electric field in a cross section at the dielectric blocks of the present design.

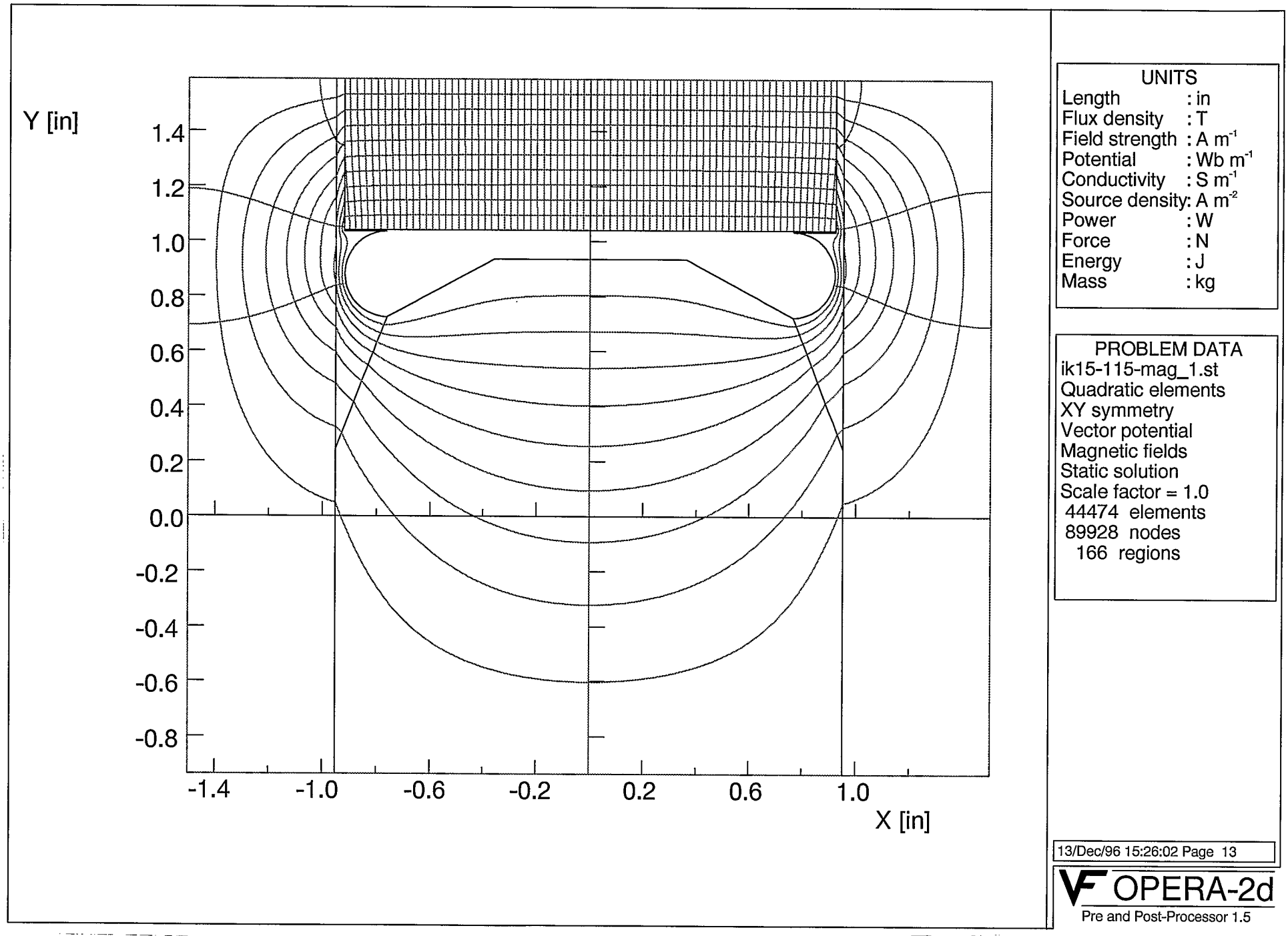

Fig. 4. Electric field in a cross section at the dielectric blocks of the present design, but with the ceramic beam tube removed.

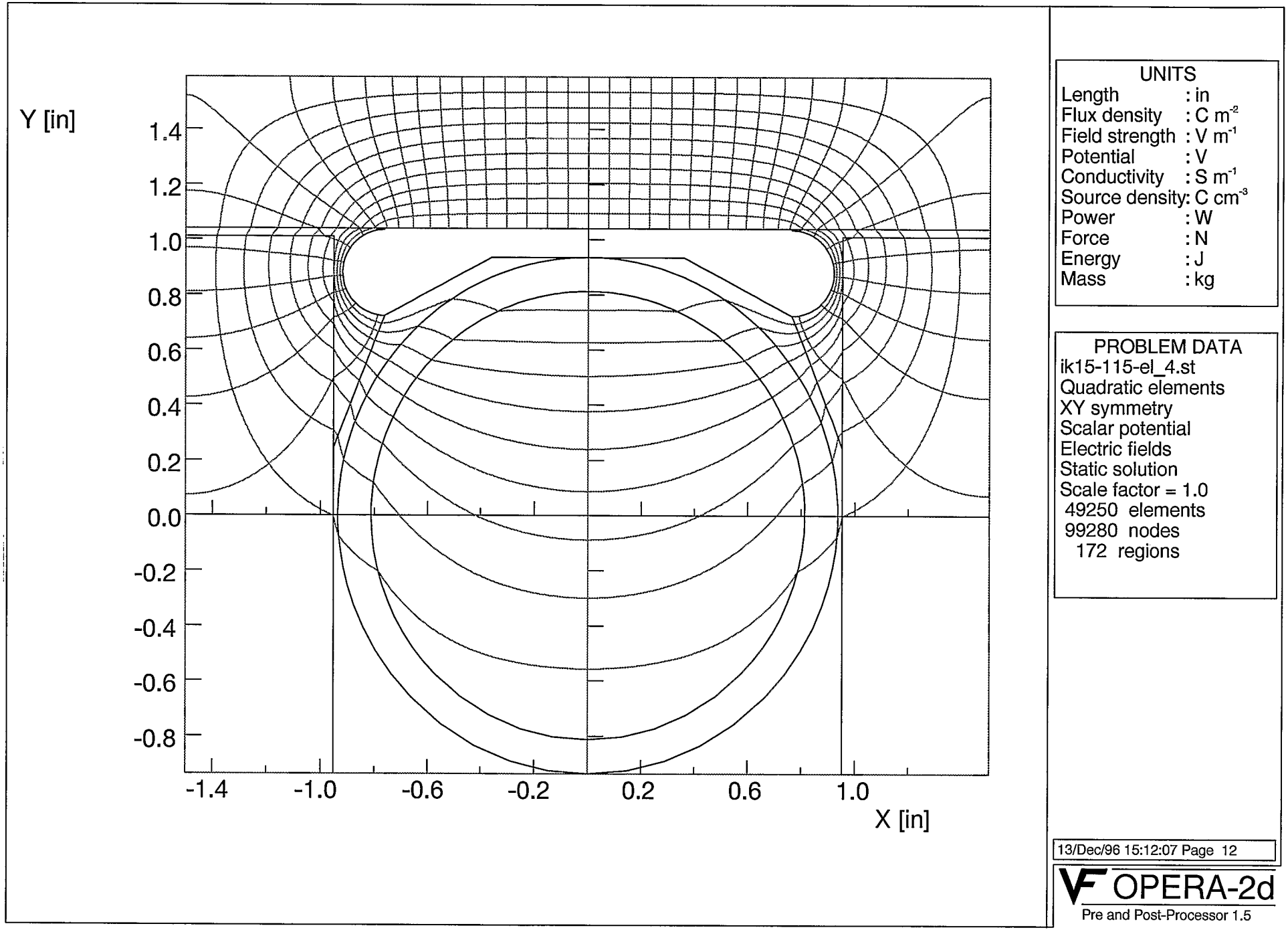

Fig. 5. Electric field in a cross section at the ferrite blocks.

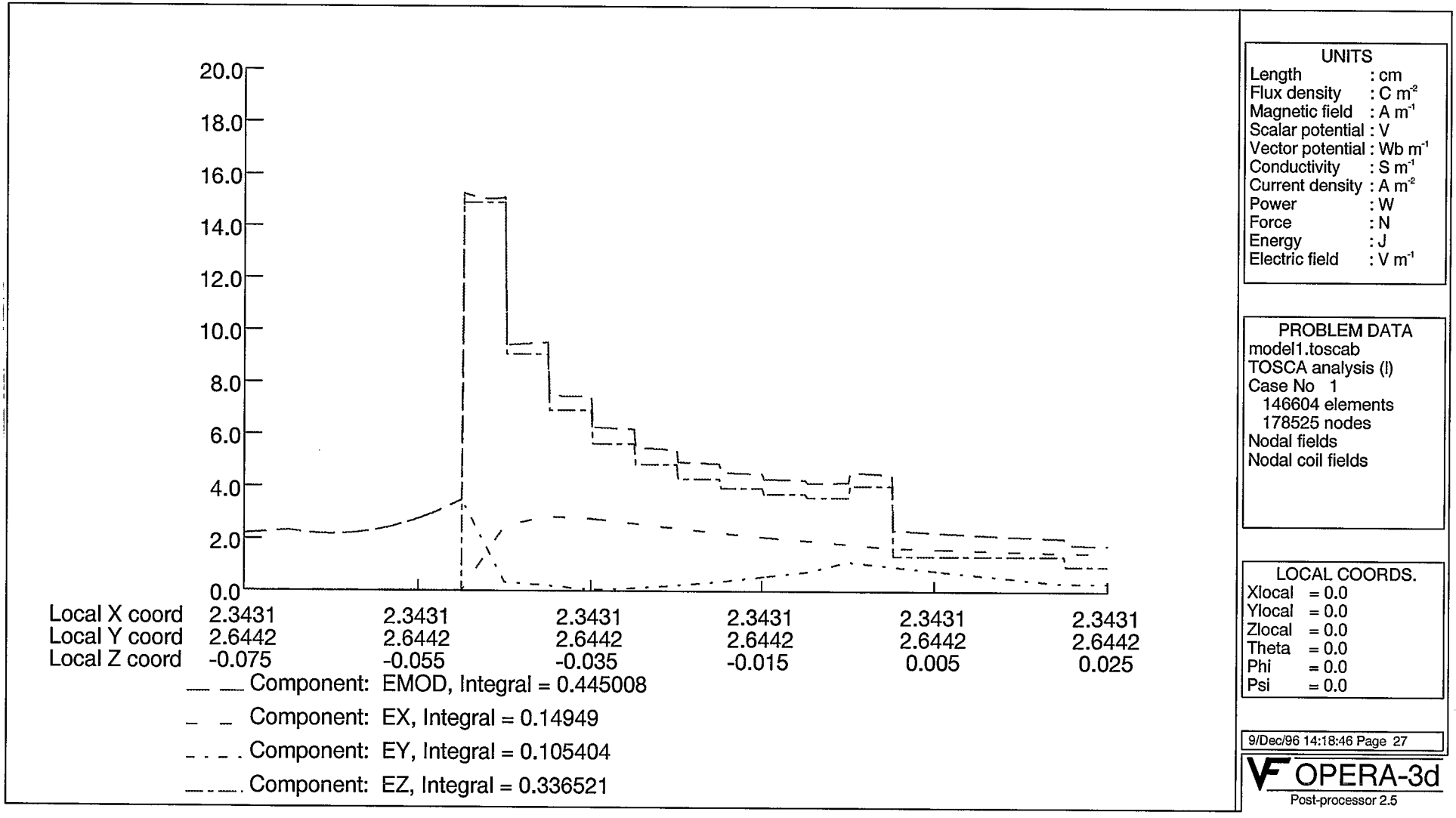

Fig. 6. Electric field components on a line in beam direction through the dielectric block (at left), the epoxy layer, and the ferrite block (at right).

V. SIMPLIFIED FABRICATION

A design modification of the ferrite section as shown in Fig. 7 would reduce the number of block types and simplify the fabrication without affecting the numerical results in Table 1. Bench measurements showed that the epoxy breaks at the side between the ferrite blocks are essential to maintain the traveling wave structure. The computed 2-dimensional electric field at the ferrite blocks, with 1.5 in. Indium under the bus bar, is shown in Fig. 8; the fields in the uniform part of the dielectric blocks, with full Indium coverage, remain unchanged from Fig. 3. The 3-dimensional electric peak field at the ferrite-epoxy-dielectric interface on a line in beam direction through the corner of the blocks is shown in Fig. 9. The field enhancement in the dielectric is 3.45 and thus essentially unchanged from the present design.

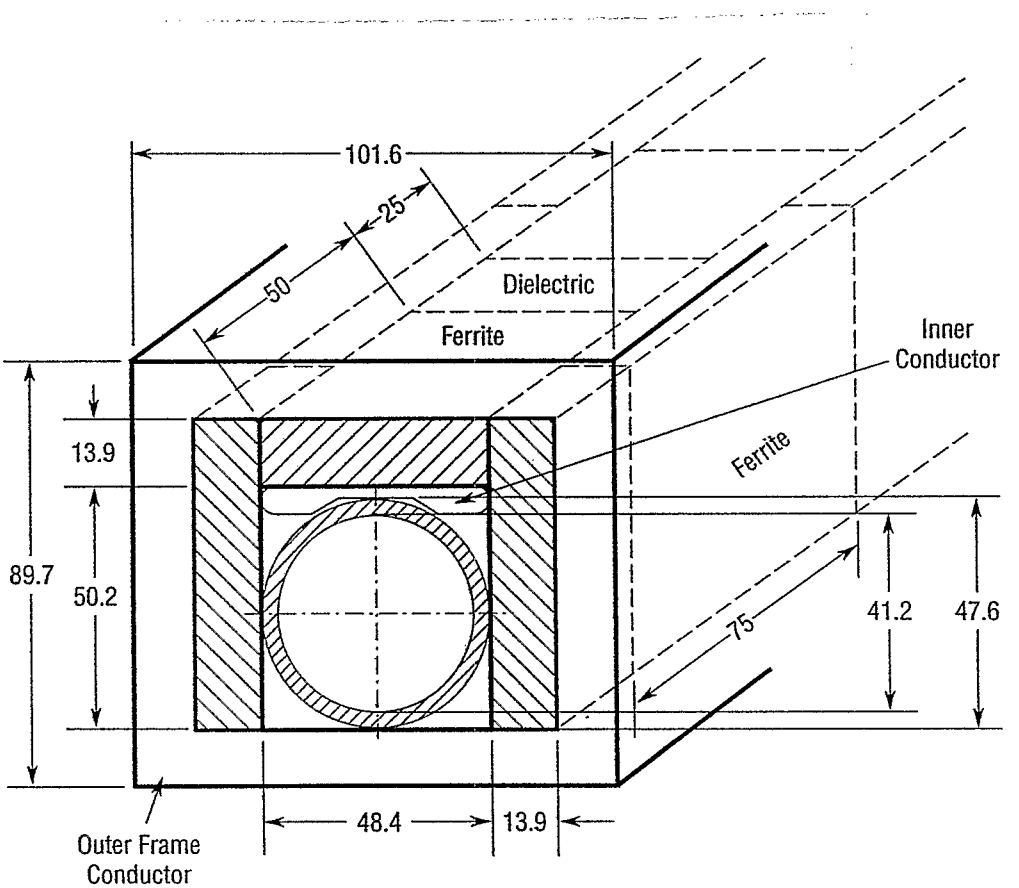

Fig. 7. Geometry of kicker with simplified side blocks.

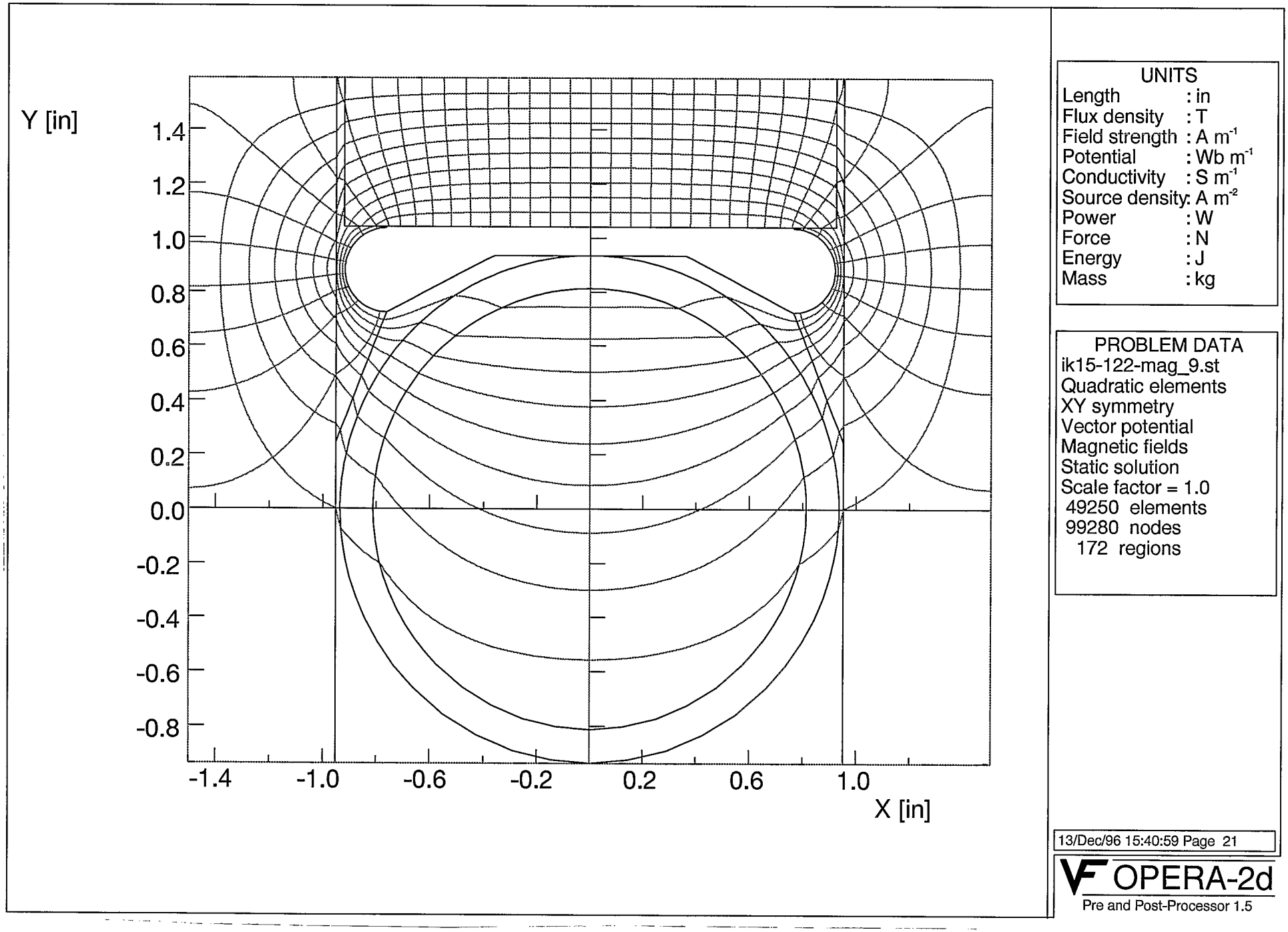

Fig. 8. Electric field in a cross section at the ferrite blocks of the simplified design.

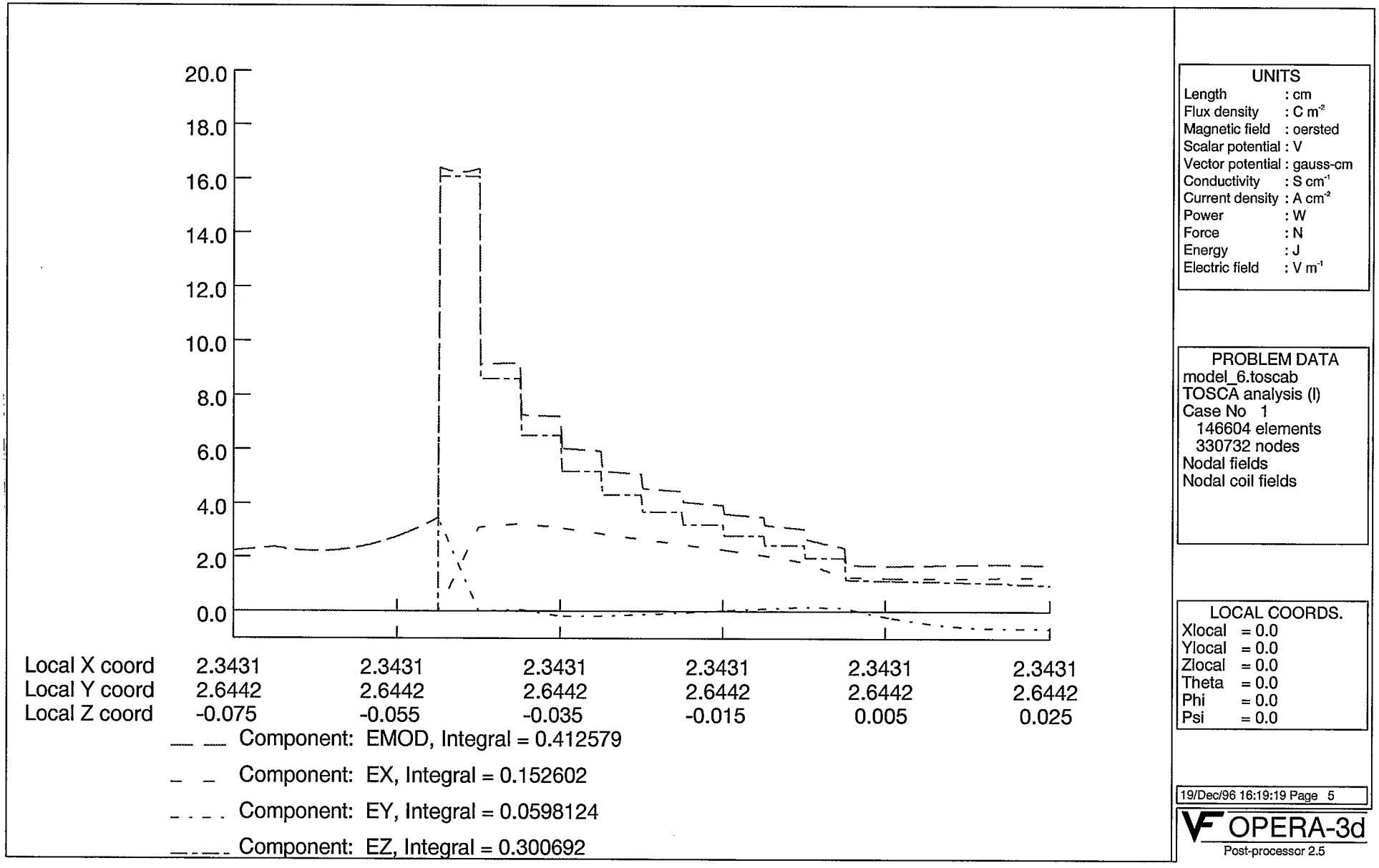

Fig. 9. Electric field enhancement in the simplified design, computed on a line in beam direction through the corners of the top blocks at the ferrite-dielectric interface.

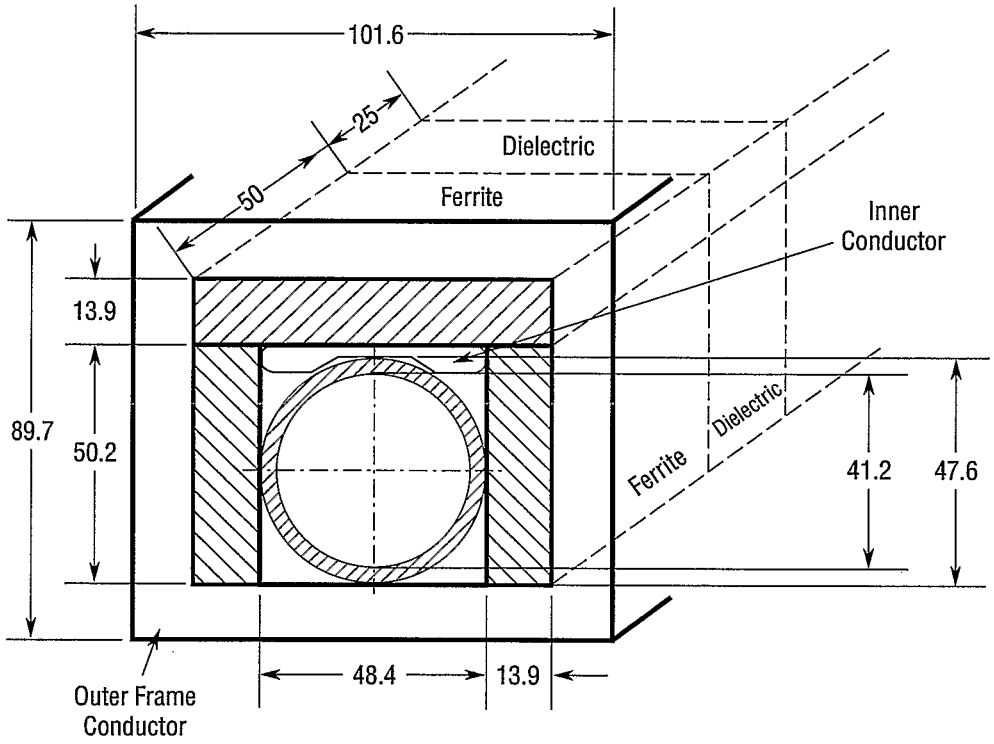
101.6
25
50
Dielectric
Ferrite
Inner
Conductor
13.9
89.7
50.2
Ferrite
Dielectric
41.2
47.6
48.4
13.9
Outer Frame
Conductor

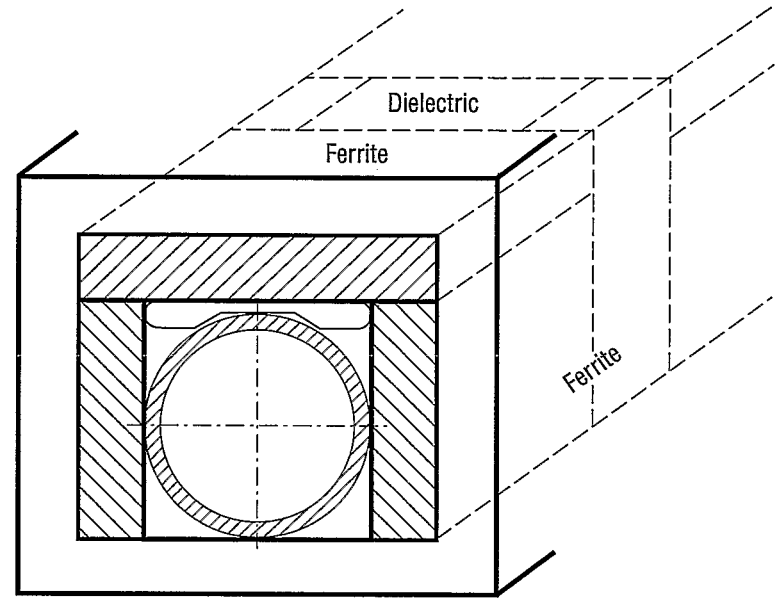
Dielectric
Ferrite
Ferrite

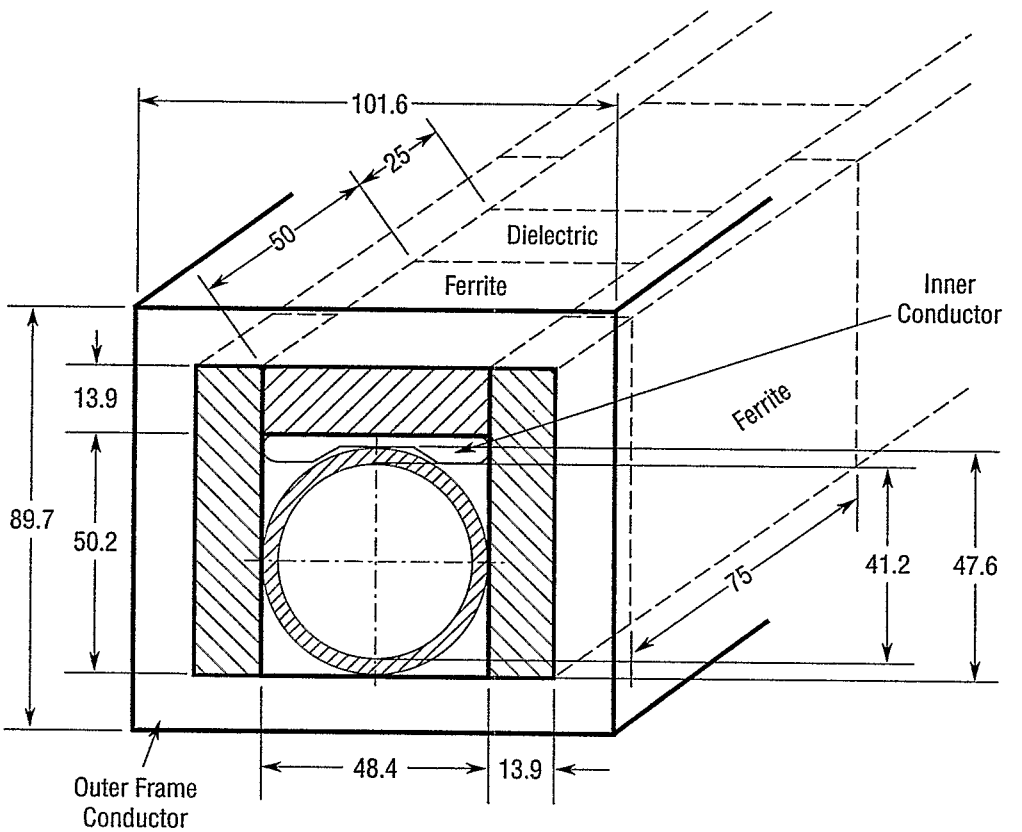
101.6
25
50
Dielectric
Ferrite
Inner
Conductor
Ferrite
13.9
89.7
50.2
75
41.2
47.6
48.4
13.9
Outer Frame
Conductor