AD/RHIC-RD-10

RHIC RF System

(Mini-Workshop on RHIC RF Systems)

July 11-15, 1988
Collider Center

M. Puglisi
BNL

ACKNOWLEDGEMENTS

THIS TALK HAS BENEFITED FROM SIGNIFICANT CONTRIBUTIONS BY M. BRENNAN, E. C. RAKA AND A. RATTI.

THE HIGH FREQUENCY SYSTEM (HFS)

BASIC DESIGN GOALS

The HFS should exhibit some basic properties

1) Full transparency to the beam

2) Modulability: From a total voltage less than 1MV to a total voltage of not less than 12MV

3) Insensitivity to the steady and dynamic beam loading

4) Easy response to feedback loops

5) Reliability and capability of quick recovery from faulty operation

6) Insensitivity to the multi-pacting

BASIC DESIGN CRITERIA

Without totally ruling out the trivial solution: "ID EST" a sintem with extremely low output impedance, it is important to realize that the above requirements do not necessarily depend upon the hardware. [for example: the modulability can be realized both via hardware as it is well known or via the low level system counter phasing the cavity as it is proposed to do.]

On the contrary, the hardware should be designed in such a way as to be a "tamed horse" in the hands of the low level system.

PARAMETERS

GOLD $n = 1.1\ 10^{9}$ $SC = 79$ $M = 197$

$l = 3833.845$ m

$f_r = \frac{c}{l} = 78.19564954$

$f = N f_r = N \frac{c}{l} = 4.457152024$; $T = 2.243585129$

$f_{rf1} = h_1 * f = 6 * f = 26.74291214$ MHz

$f_{rf2} = h_2 f_{rf1} = 6 * f_{rf1} = 160.4574729$ MHz

$q = n\ e\ SC = 139.04\ 10^{-8}$ COULOMB

$Q = N q = 7.92528\ 10^{-7}$ COULOMB

$I_{AVE} = Q * f_r = 0.0619722241$ AMP

Despite the very different shapes of the bunch, the corresponding spectra are not widely different.

This allows to design the hardware without a precise knowledge of the beam shape.

The important parameters are

q=charge per bunch

τ=time length of the bunch

For RHIC, the absolute limits are

$$q = 1.1 \times 10^9 \times e = 1.39^{-8}$$

1ns	τ	17ns
13.9	I_{peak}	27.8

BEAM HARMONICS

a) – ARC OF COSINE

$$I_b(t) = \frac{\pi}{2}\,\frac{q}{\tau}\,\cos \pi \frac{t}{\tau}$$

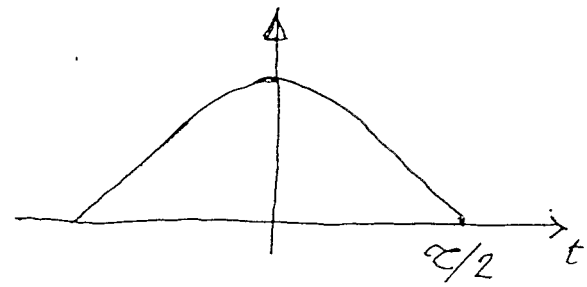

$$I_n = 2\,\frac{q}{\tau}\,\frac{\cos \pi n \frac{\tau}{T}}{\left(\frac{T}{\tau}\right)^2 - (2n)^2}$$

b) – SQUARED ARC OF COSINE

$$I_b(t) = 2\,\frac{q}{\tau}\,\cos^2 \pi \frac{t}{\tau}$$

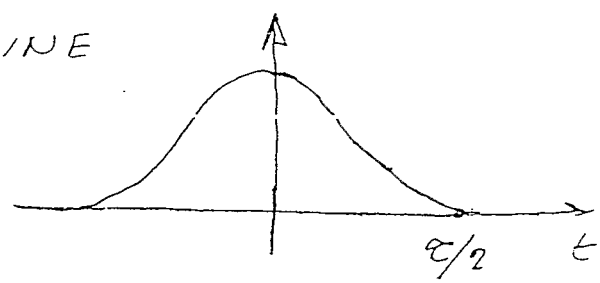

$$I_n = \frac{2q}{\pi \tau n}\,\frac{\sin \pi n \frac{\tau}{T}}{1 - \left(n \frac{\tau}{T}\right)^2}$$

I τ,33	F τ,33	I τ,34	F τ,34	τ
0.12160779	0.12237969	0.12145523	0.12227404	1
0.11432956	0.11731253	0.1137469	0.11690443	2
0.10290664	0.10924069	0.10169421	0.10837472	3
0.08831507	0.0986882	0.08638751	0.09727141	4
0.07176256	0.08632074	0.06916513	0.08433481	5
0.05455509	0.07288657	0.05145694	0.07038965	6
0.03795731	0.05915229	0.03462328	0.05627036	7
0.02306446	0.04584005	0.01981047	0.04274925	8
0.01070111	0.03357251	0.00784129	0.03047526	9
0.00135798	0.02283084	-0.00084702	0.01992926	10
-0.00482727	0.013929	-0.00621188	0.01139955	11
-0.00804602	0.00700609	-0.00856406	0.0049789	12
-0.00875731	0.00203596	-0.00848535	0.00058154	13
-0.00760023	-0.00114837	-0.00672	-0.0020236	14
-0.00529354	-0.00281947	-0.00405728	-0.00316864	15
-0.00253707	-0.00331417	-0.00122241	-0.00323782	16
0.00007225	-0.00299148	0.00120934	-0.00261997	17

I τ,35	F τ,35	I τ,36	F τ,36	τ
0.12129826	0.12216532	0.1211369	0.12205352	1
0.1131491	0.11648533	0.11253635	0.11605534	2
0.10045628	0.10748862	0.09919372	0.10658286	3
0.08443333	0.09582914	0.08245486	0.09436272	4
0.06655731	0.08232704	0.06394365	0.08030015	5
0.04838657	0.06788747	0.04535094	0.0653845	6
0.03137602	0.05341421	0.02822401	0.05059005	7
0.01671562	0.03972824	0.01378763	0.03678423	8
0.00521354	0.02750015	0.00282125	0.02465389	9
-0.00276216	0.01720341	-0.00439259	0.01465734	10
-0.00727901	0.00909227	-0.00804602	0.00700609	11
-0.0087778	0.00320508	-0.00871879	0.00167614	12
-0.00796635	-0.00060982	-0.00724504	-0.0015555	13
-0.00568841	-0.00265066	-0.00455881	-0.00305602	14
-0.00278952	-0.00330836	-0.00154441	-0.00327267	15
0	-0.00300987	0.00108517	-0.00266875	16
0.00214908	-0.00216594	0.00286566	-0.00166775	17

I τ,37	F τ,37	I τ,38	F τ,38	τ
0.12097115	0.12193866	0.12080104	0.12182074	1
0.11190884	0.11561456	0.11126678	0.1151631	2
0.09790741	0.10565791	0.09659826	0.10471427	3
0.08045444	0.09287346	0.07843443	0.09136272	4
0.06132866	0.07825683	0.05871677	0.07619976	5
0.04235677	0.06288514	0.03941052	0.06039371	6
0.02517511	0.04780382	0.02223651	0.04506122	7
0.01103298	0.03392387	0.00845691	0.03115324	8
0.00066585	0.02194222	-0.00125311	0.01936988	9
-0.00574595	0.01229365	-0.00683227	0.01011352	10
-0.00853293	0.00513806	-0.008762	0.00348346	11
-0.00842047	0.00038154	-0.00791747	-0.00069105	12
-0.00636613	-0.00227469	-0.0053734	-0.00278791	13
-0.00338147	-0.00326705	-0.00220261	-0.00331148	14
-0.00036916	-0.00309502	0.00069672	-0.00280759	15
0.00199891	-0.0022503	0.00271799	-0.00178709	16
0.00334687	-0.00115892	0.00359323	-0.00066763	17

Construction Technique

a) Efficient and fast feedback operations are possible only with tubes directly mounted on the cavity

b) Two "small" tubes per cavity are preferable than one with twice the power.This is due to the fact that the frequency is already high and the "small" tube should be alwais a tube with more than 20kV of plate dissipation and this implies large mechanical sizes.

c) Counter phasing seems a very good and economical technique for amplitude modulation of the total voltage. This implies an even number of cavityes.

d) Beam loading is well under control because each cavity works at nearly full voltage.

Having decided for an even number of cavities a series modulator can be used groupeing the cavityes two by two.

One series tube controls two cavityes:

1. The cost is heavily reduced

2. In case of faulty operation a unit of two counterphased cavityes is automatically eliminated.

3. With this system the counter phasing should be done with the beam "at 90 degrees" in case of total counterphasing.

$$V = 2 \times 500\,kV = 1.0\,MV$$

$$P = 2 \times 33\,kW = 66\,kW$$

$$R = \frac{(10^6)^2}{2 \times 66 \times 10^3} = 7.6\,M\Omega$$

$$R/Q = 123\,\Omega$$

$$E_{peak} = 2.2\,MV/m$$

$$T = 0.88$$

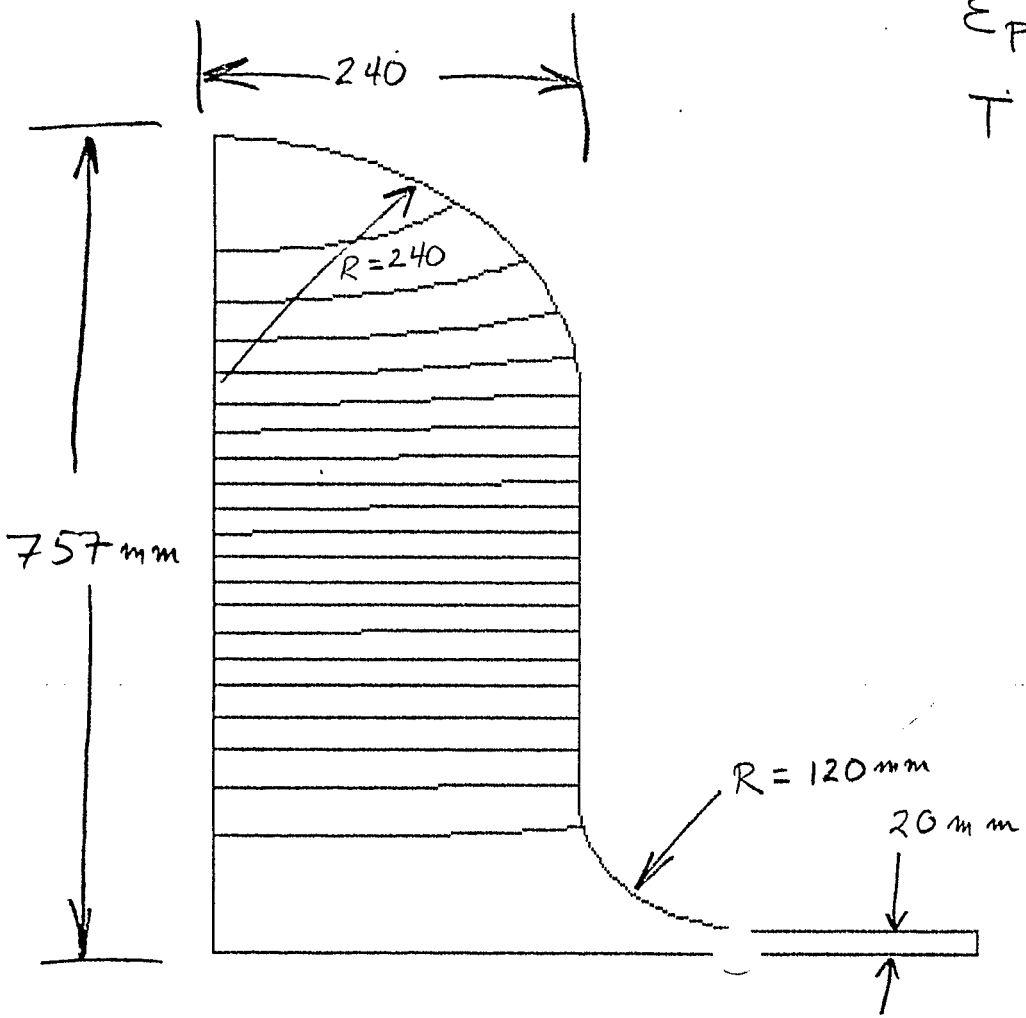

F = 163.2 MHz P_d = 72.94 kW R_s = 6.85 M R/Q = 123 E_{peak} = 6.4 MV/m

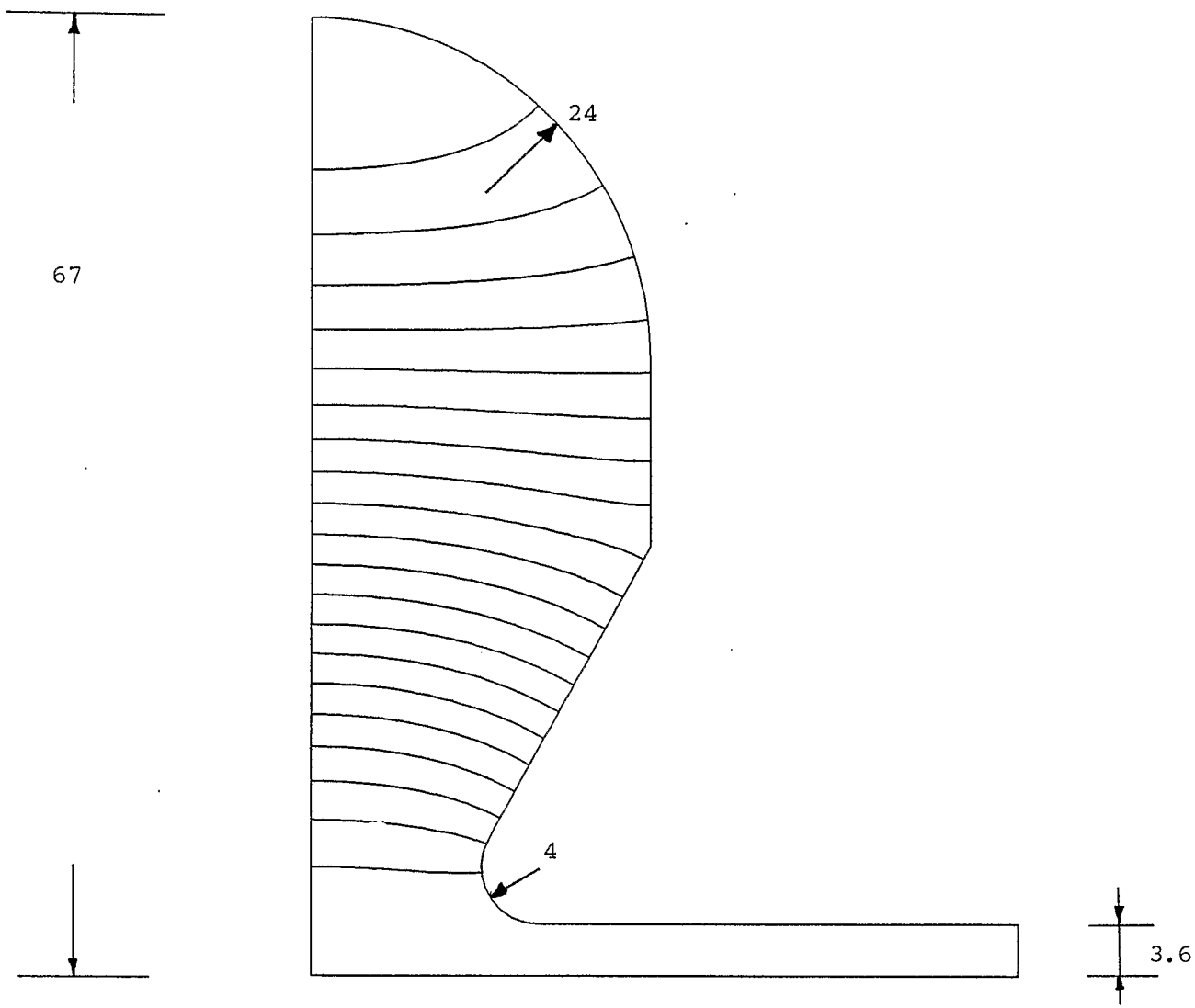

Comments on the cavity design.

The cavity is not at all a probelm; nevertheless some performances are important.

a.) The intrinsic shunt impedence should be as high as possible. In fact there are many techniques that permit to lower the gap shunt impedence. The contrary is impossible.

b.) The transient behavior as well as the sensitivity to the beam loading depend upon the ratio R/Q. An effort should be made in order to keep R/Q as small as possible.

c.) For stability reasons, the ratio between peak and accelerating field should not be too large
In any case, it is not save to push the peak field above 6-8 MV/m.

d.) A dome shaped cavity is to be preferred for reducing the multipactoring.

e.) A not extremely transit time factor would help in reducing the effect of the higher order modes.

Comment on the power amplifiers.

- After many runs of superfish, it became clear that a shunt impedence (theoretical-intrinsic) of 6MΩ is the most likely to occur.

- The imperfect matching, the ceramic windows and eventually the H O M suppressor easily reduce this impedence to 4MΩ. Assuming a voltage of 700kV per cavity (power and gradient limitations), we obtain a power of about 60 kW.

- This power demands for somewhat large tubes. Moreover at the frequency of 160 MHz many tubes are to be derated. Furthermore, besides the demand of power, there is the demand of current (fast compensation of the transient beam loading) Takeing into account the various requirements, a 80 - 100 kW plate dissipation tube is absolutely requested.

- The actual need of fast and slow feedback loops (and in general of some gymnastic with feed forward techniques) render mandatory to connect the driveing tube(s) directly to the cavity. In other words a cavity coupling system is needed instead of an amplifier connected to the cavity with coaxial cables.

- The mechanical sizes of the cavity are in the park of: 1.5 m (diameter), 0.5 m (thickness) and it is difficult to change drastically those sizes On the other hand a tube with 80-100kW of plate dissipation may be inscribed in a cylinder 40 cm long and 30 cm large. Those sizes do not combine well with the sizes of the cavity and difficulties are to be expected with the electro-mechanic construction.

- The situation considerably improves if two small tubes per cavity are used. With this option we have several important advanteges.

Each tube is small and a simple and compact mounting is feasible. The feedback distances are not big even for 160 MHz.

Push pull or push push operation is possible. If push push operation is chosen and neutralized triodes are used, then the gap input impedence can be lowered at no cost.

The cavity can be feed in a more simmetric way and the impedence of the H O M is reduced. The ceramic windows are easier to fabricate and allow a safer operation.

Once the anodes are mounted, then the grid circuit can be chenged without much effort.

PUSH PULL CAVITY COUPLING SYSTEM

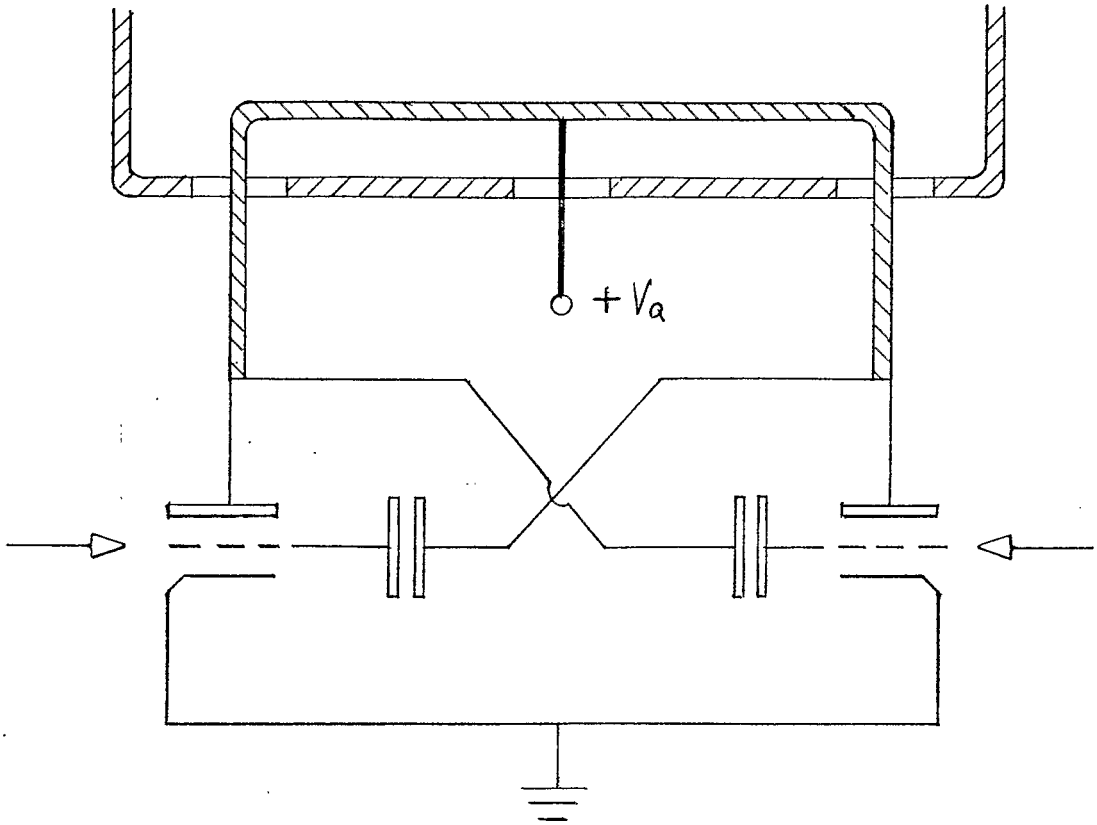

SINGLE ENDED CAVITY COUPLING SYSTEM

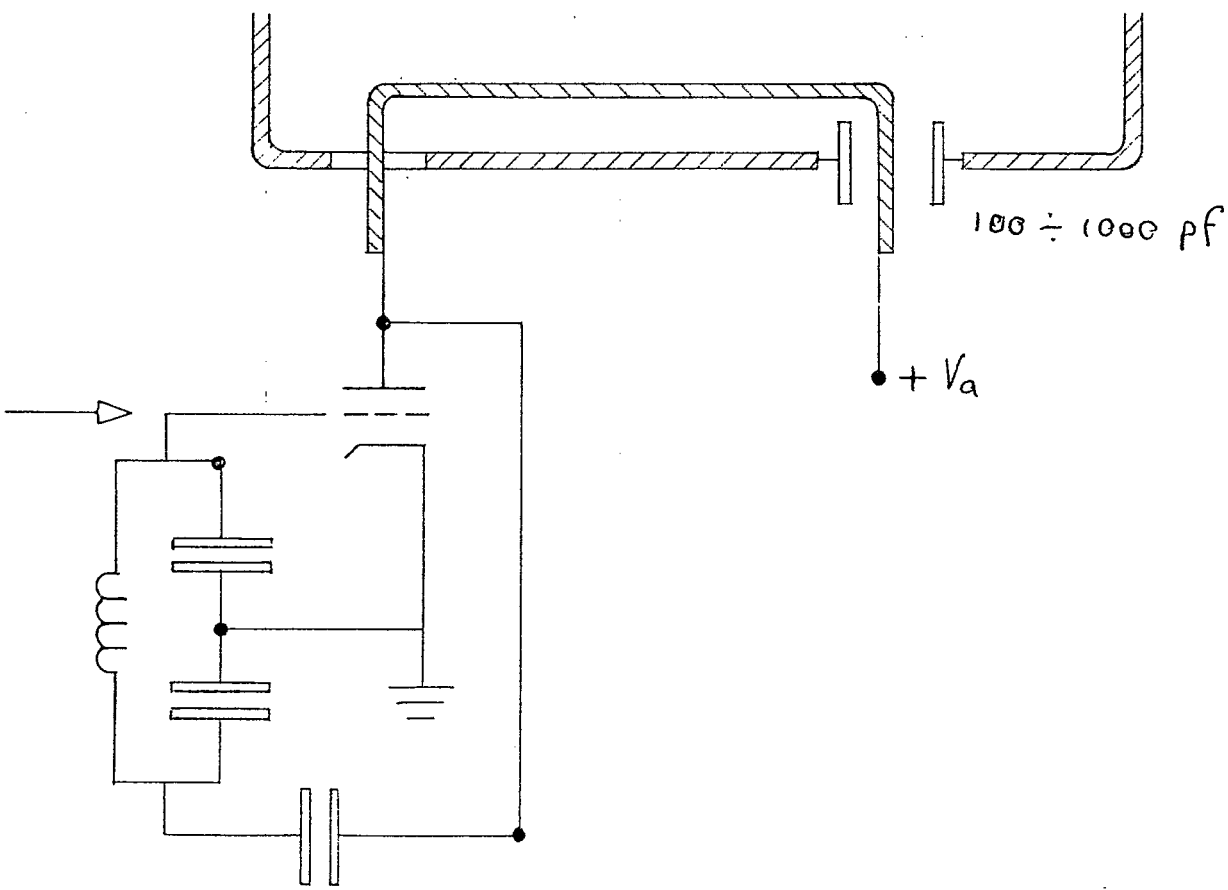

NEUTRALIZED PUSH PULL OUTPUT IMPEDENCE

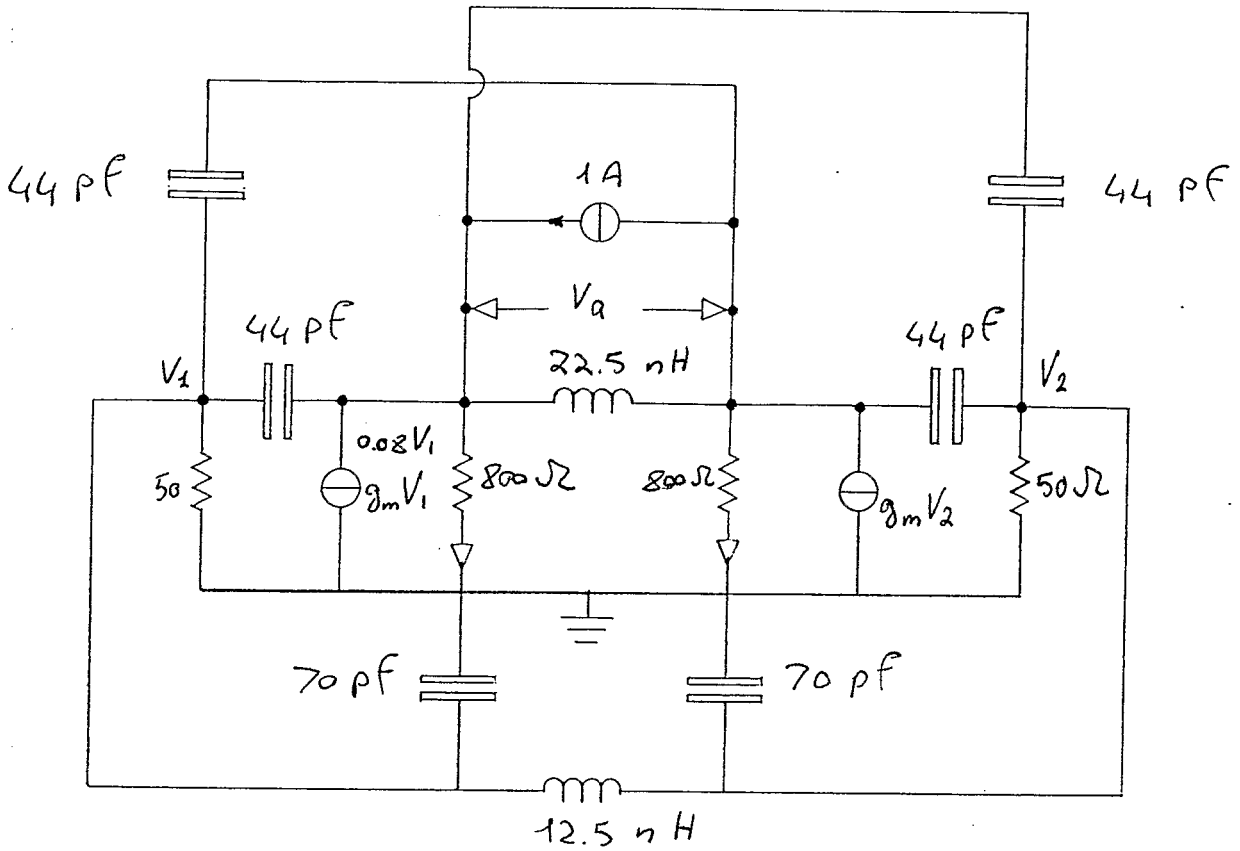

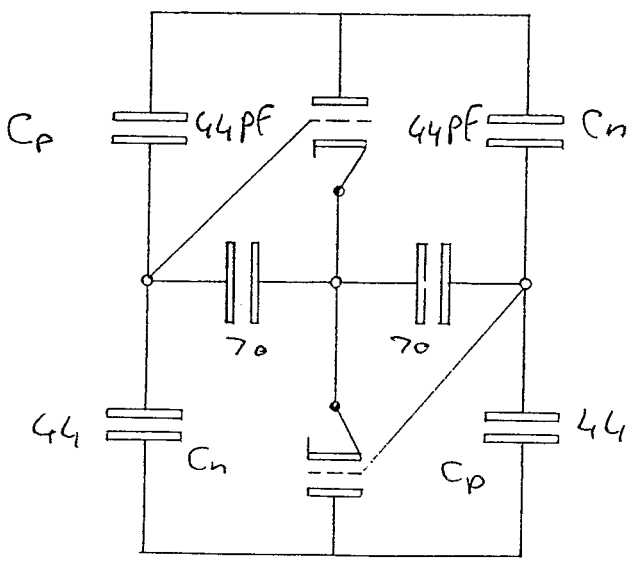

$$C_{aa} = 2\,\frac{C_p C_n}{C_p + C_n} = 44\,pf$$

$$C_{gg} = 2\,\frac{C_p C_n}{C_p + C_n} + \frac{1}{2}\,C_K = 79$$

$$C_{Tp} = C_{Tg} = 0$$

NEUTRALIZED SINGLE ENDED OUTPUT IMPEDENCE

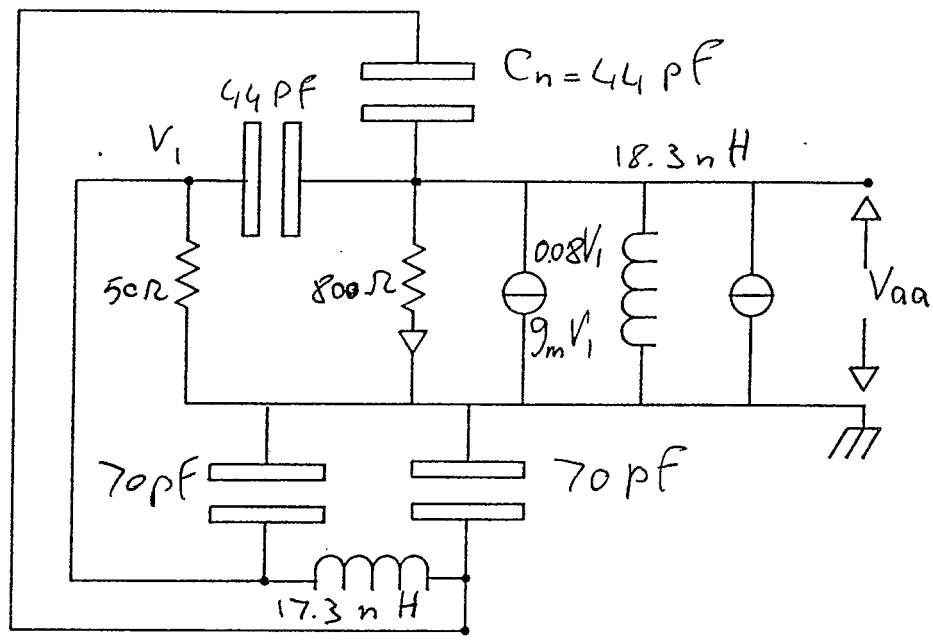

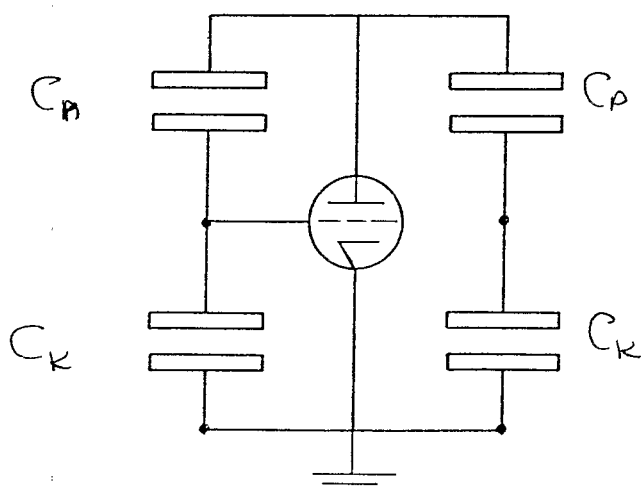

$$\frac{C_p}{C_k} = \frac{C_n}{C_k} \Rightarrow C_p = C_n$$

$$\begin{cases} C_a = 2\dfrac{C_p C_k}{C_p + C_k} = 54\ pf \\ C_g = \dfrac{1}{2}\left(C_p + C_k\right) = 57\ pf \end{cases}$$

NEUTRALIZED PUSH PULL OUTPUT IMPEDENCE

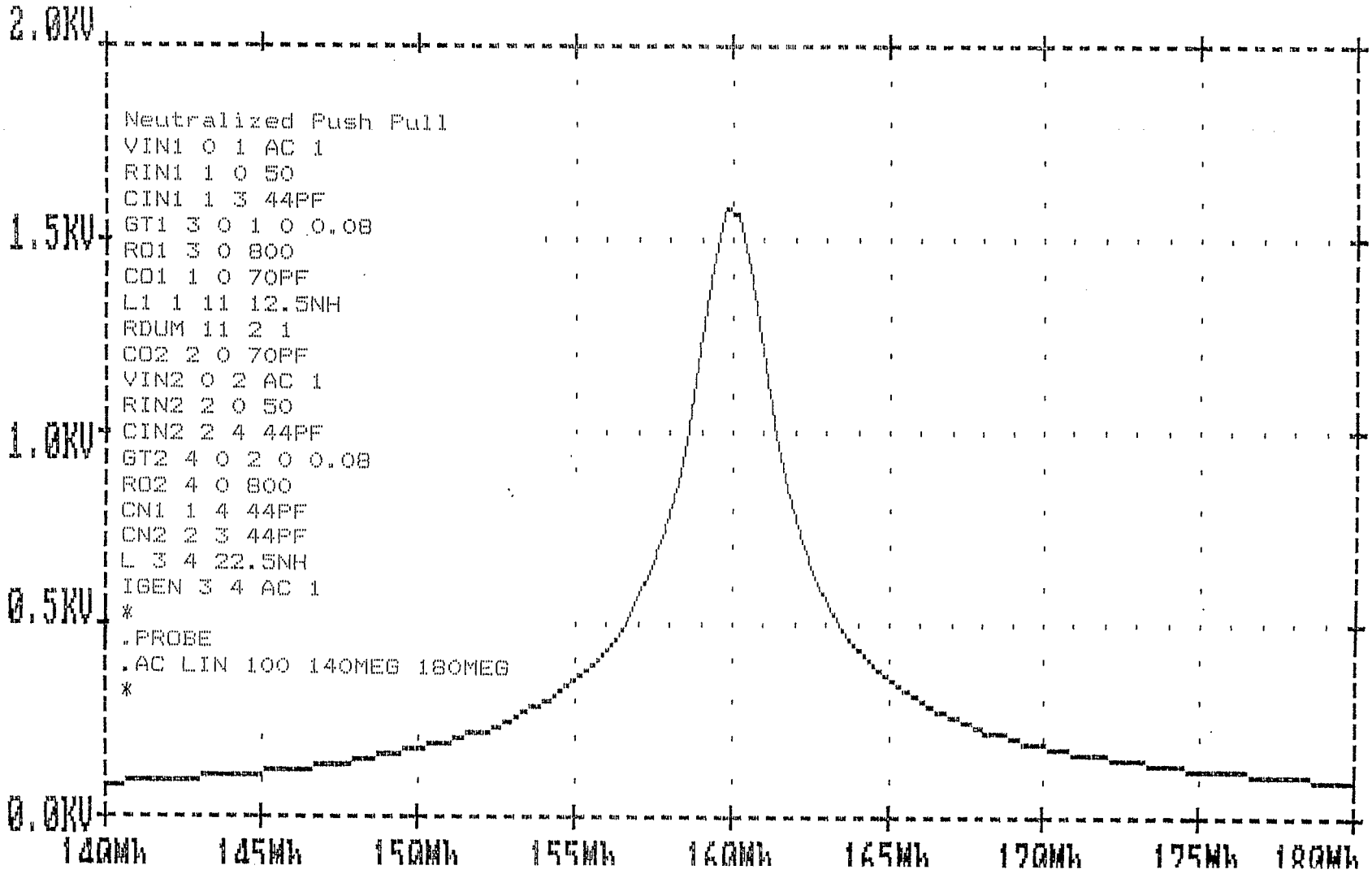

NEUTRALIZED SINGLE ENDED OUTPUT IMPEDENCE

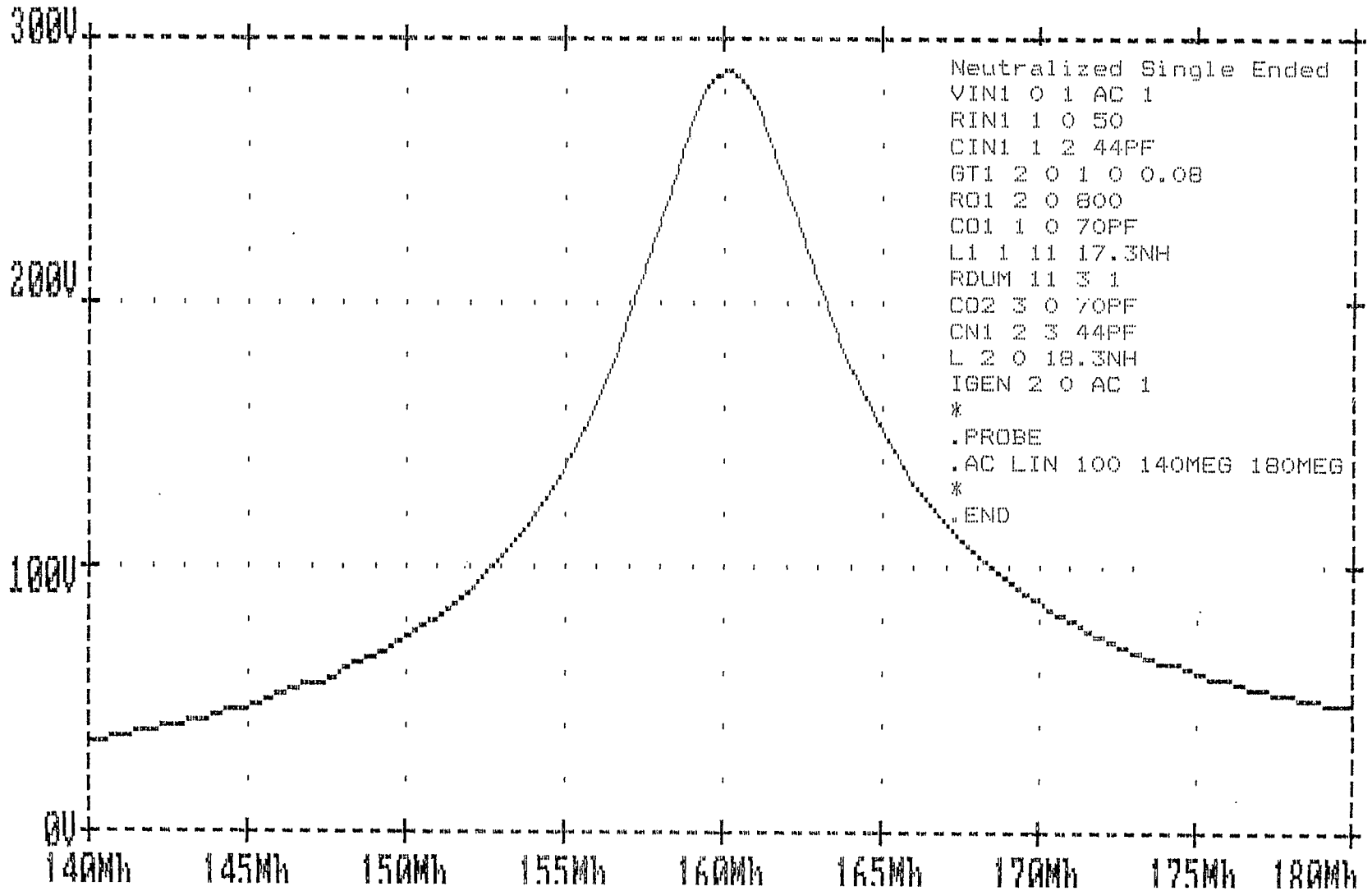

SINGLE ENDED CAVITY COUPLING SISTEM. TWO TUBES PER CAVITY. ONE SERIES MODULATOR FOR TWO CAVITIES—
LOW OUTPUT IMPEDANCE CONFIGURATION.

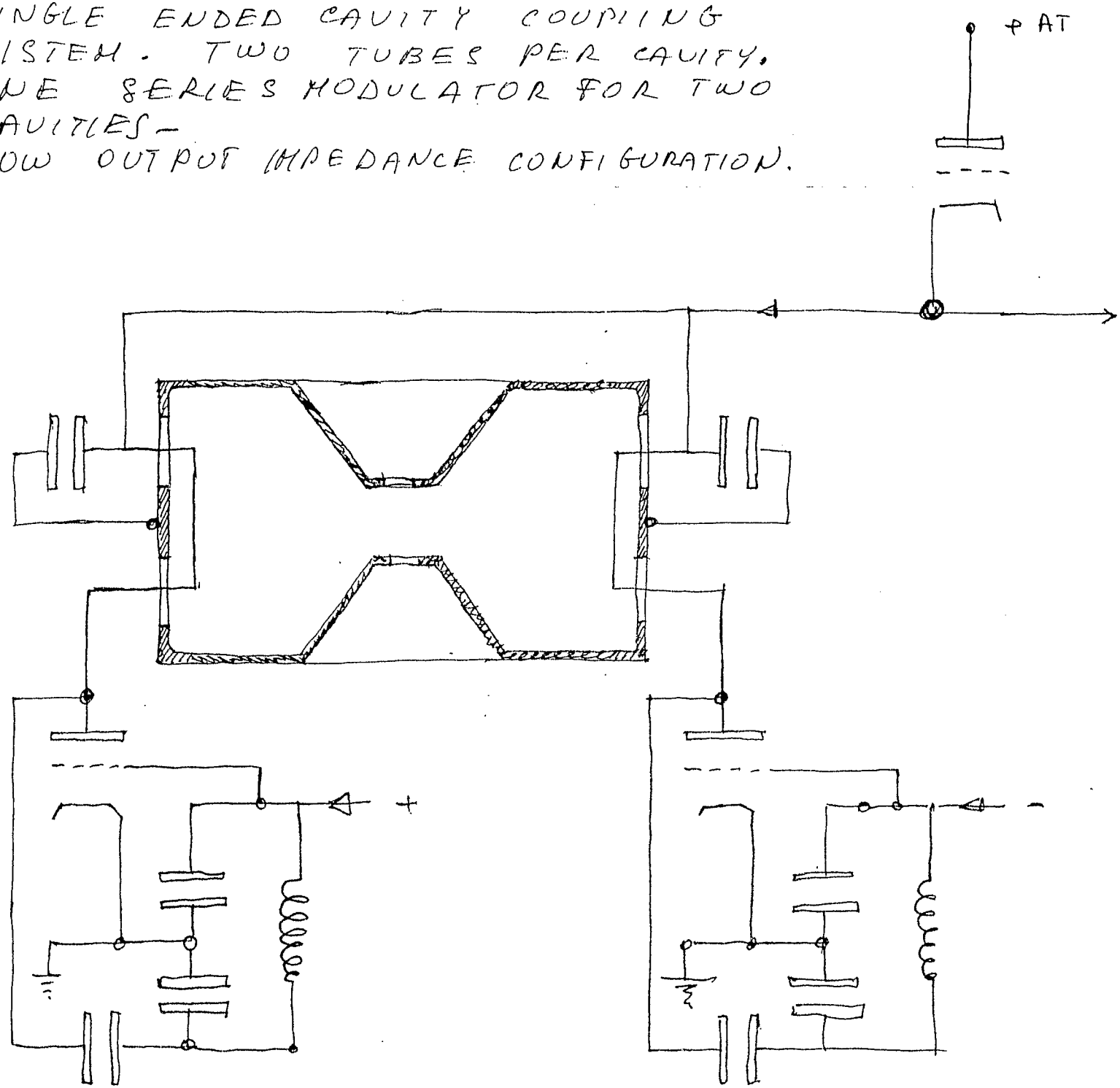

OUTLINE DRAWING

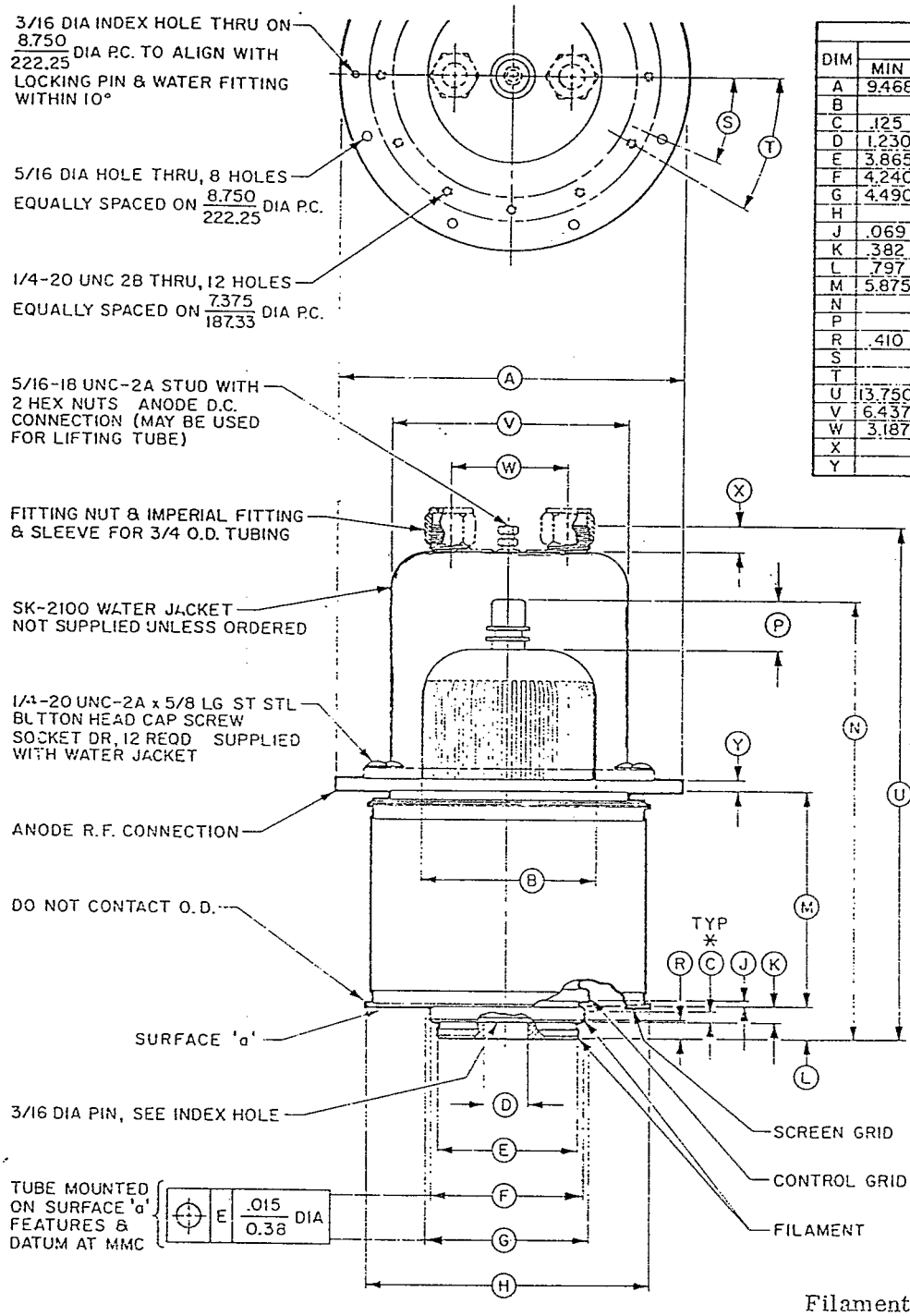

DIMENSIONAL DATA						
DIM	INCHES MIN	INCHES MAX	INCHES REF	MILLIMETERS MIN	MILLIMETERS MAX	MILLIMETERS REF
A	9.468	9.531		240.49	242.09	
B			5.000			127
C	.125			3.18		
D	1.230	1.270		31.24	32.26	
E	3.865	3.885		98.17	98.68	
F	4.240	4.260		107.7	108.2	
G	4.490	4.510		114.05	114.55	
H			7.750			196.85
J	.069	.149		1.75	3.79	
K	.382	.462		9.70	11.74	
L	.797	.922		20.24	23.42	
M	5.875	6.000		149.23	152.6	
N			11.500			292.1
P			1.375			34.93
R	.410	.475		10.41	12.07	
S			22 1/2°			—
T			30°			—
U	13.750	14.250		349.25	361.95	
V	6.437	6.562		163.7	166.88	
W	3.187	3.313		80.95	84.15	
X			.562			14.28
Y			.312			7.93

REF DIMENSIONS ARE FOR INFORMATION ONLY

(*) MINIMUM CONTACT SURFACE

Absolute Maximum Ratings

Plate Voltage	20 kVdc
Screen Voltage	2.5 kVdc
Plate Current	16 Adc
Plate Dissipation	100 kW
Screen Dissipation	1750 W
Grid Dissipation	500 W

ELECTRICAL

Filament	Thoriated Tungsten
Voltage	15.5 ± 0.75 V
Current, at 15.5 V	215 A
Direct Interelectrode Capacitances, Cathode grounded	
Input	370 pF
Output	60 pF
Feedback	1.0 pF
Grid grounded	
Input	175 pF
Output	60 pF
Feedback	0.35 pF
Maximum Frequency, for maximum CW ratings	108 MHz

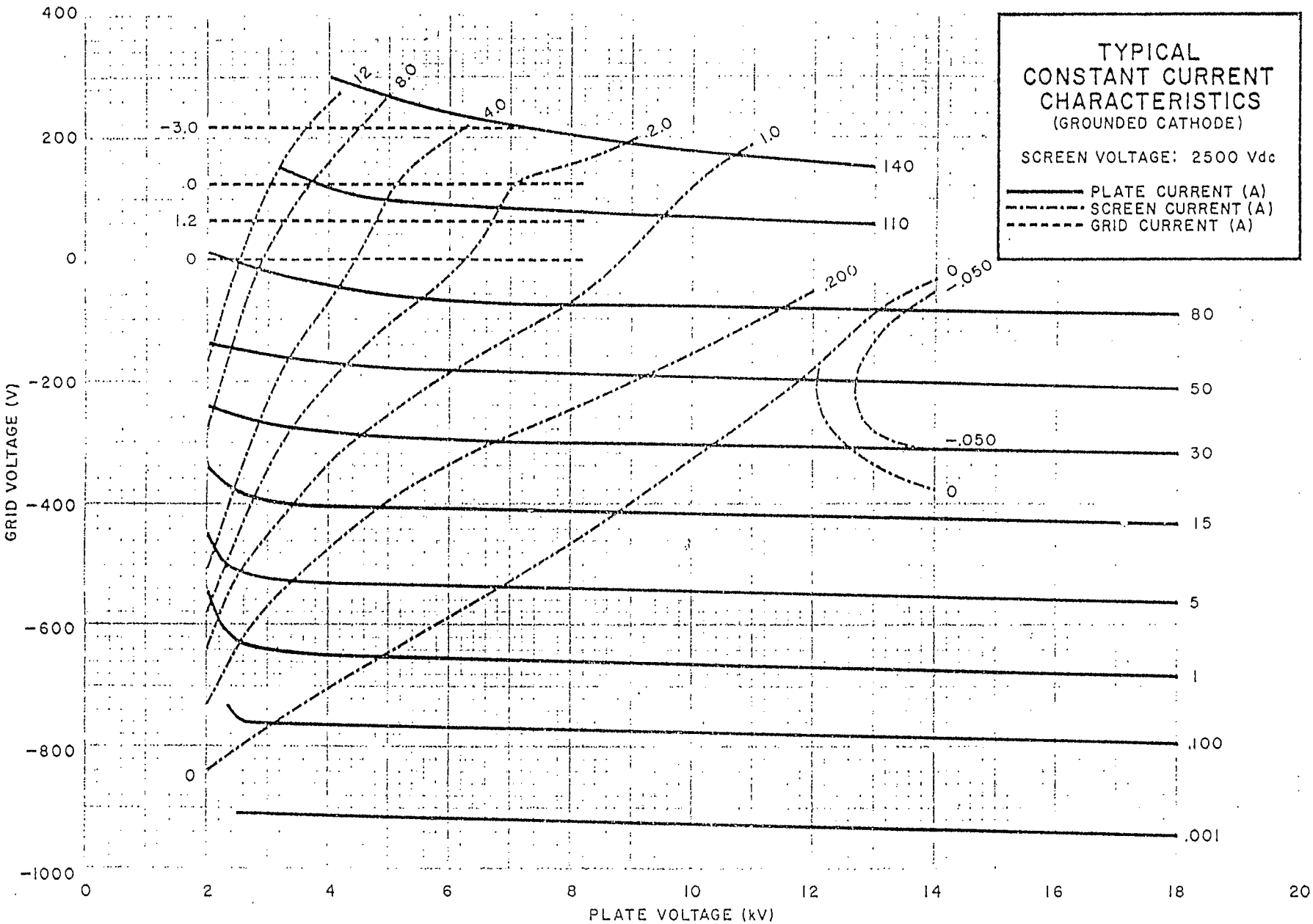

4173

4CX100,000E

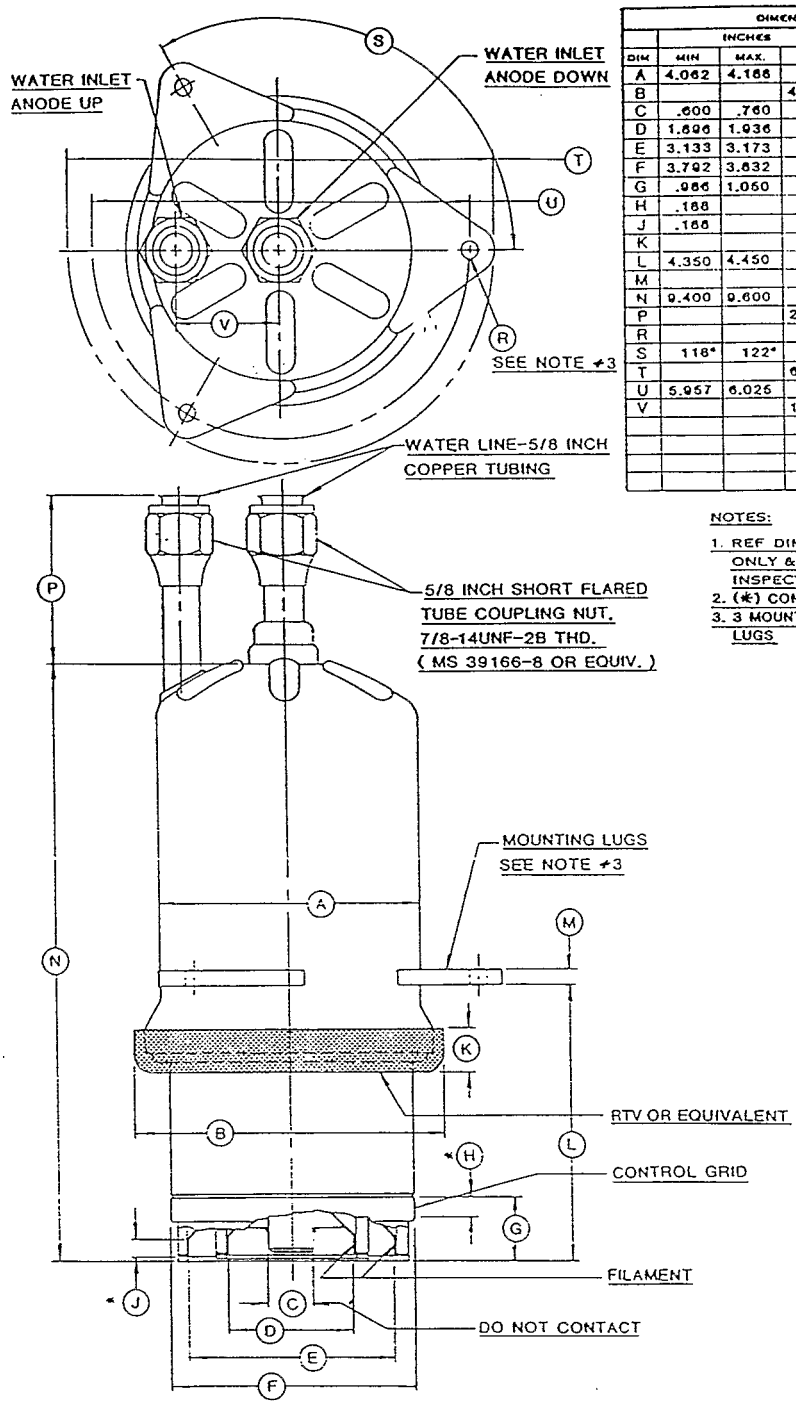

DIMENSIONAL DATA						
	INCHES			MILLIMETERS		
DIM	MIN	MAX.	REF.	MIN.	MAX.	REF.
A	4.062	4.188				
B			4.926			
C	.600	.760				
D	1.896	1.936				
E	3.133	3.173				
F	3.792	3.832				
G	.986	1.060				
H	.188					
J	.188					
K			.712			
L	4.350	4.450				
M			.250			
N	9.400	9.600				
P			2.625			
R			.265			
S	118°	122°				
T			6.750			
U	5.957	6.025				
V			1.625			

NOTES:

1. REF DIMENSIONS ARE FOR INFO ONLY & ARE NOT REQUIRED FOR INSPECTION PURPOSES.
2. (*) CONTACT SURFACE.
3. 3 MOUNTING HOLES IN MOUNTING LUGS

Filament: Thoriated Tungsten

Voltage	12.0 ± 0.5	V
Current @ 12.0 Volts	120	A

Direct Interelectrode Capacitance (grounded cathode)[2]

Cin	70.0	pF
Cout	2.3	pF
Cgp	43.0	pF

Amplification factor	55	
Frequency of Maximum Rating (CW)	90	MHz

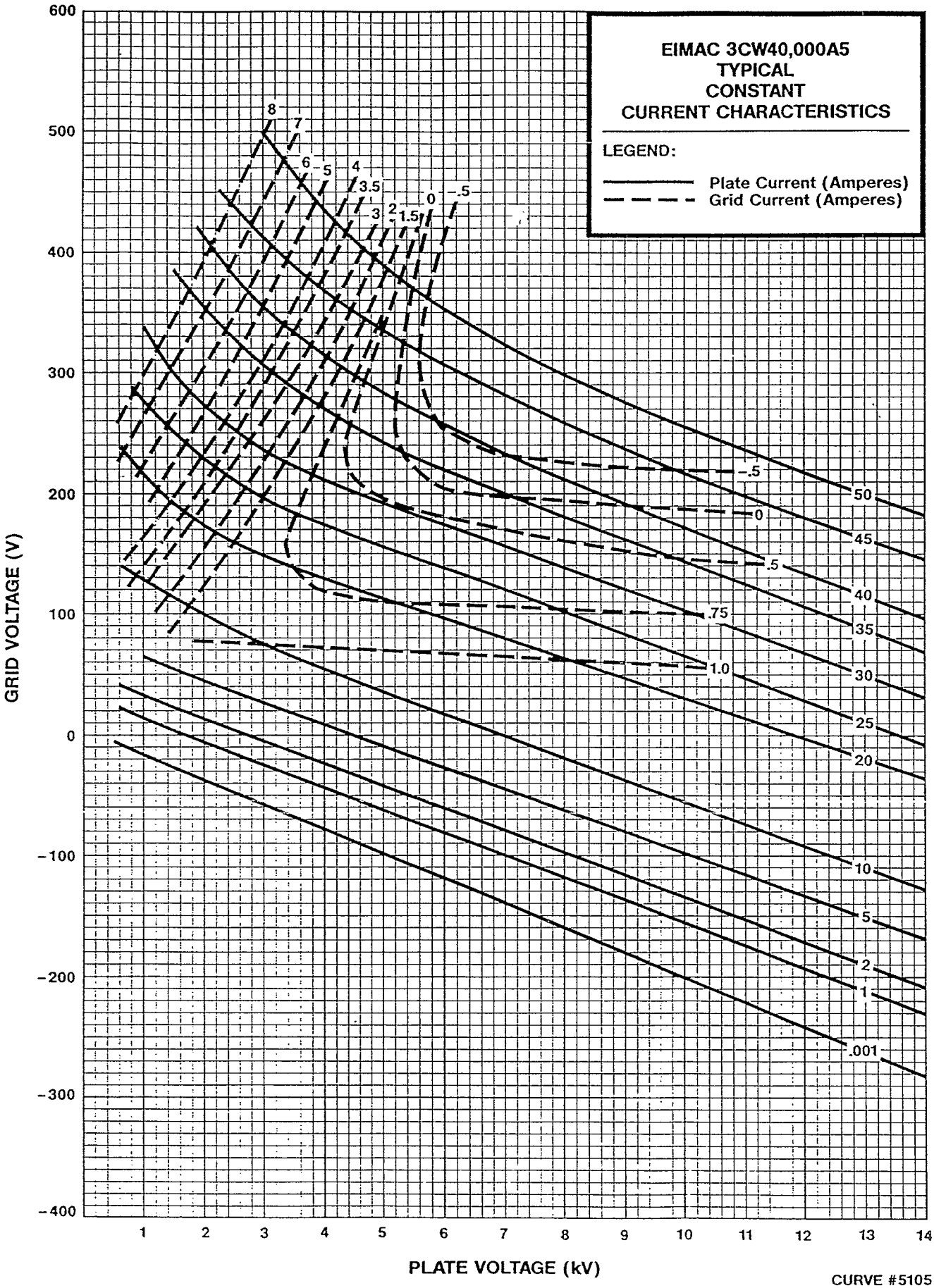
EIMAC 3CW40,000A5
TYPICAL
CONSTANT
CURRENT CHARACTERISTICS
LEGEND:
Plate Current (Amperes)
Grid Current (Amperes)
GRID VOLTAGE (V)
PLATE VOLTAGE (kV)
600
500
400
300
200
100
0
-100
-200
-300
-400
1
2
3
4
5
6
7
8
9
10
11
12
13
14
8
7
6
5
4
3.5
3
2
1.5
1
0
-.5
-.5
0
.5
.75
1.0
50
45
40
35
30
25
20
10
5
2
1
.001

CURVE #5105

THE CAVITY COUPLING SYSTEM.

a) THE CAVITY.

SUPER-FISH PARAMETER $f = 163\ MHz$

$R/Q = 123\ \Omega$ $\quad C_{eq} = 8.09\ pF$

$R = 6.8\ M\Omega$

FOR $V_{gap} = 700\ kV$ AND $R \cong 4\ 10^6$

WE OBTAIN: $W \cong 60\ kW$

b) THE AMPLIFIER.

WE ASSUME TWO EIMAC 3CW 40,000 A5.

WITH THE ALREADY SHOWN SPLIT GRID NEUTRALIZATION THE OUTPUT IMPEDANCE IS $\sim 300\ \Omega$. WITH A VOLTAGE RATIO OF 35 $(700\ kV / 2 \times 10.000)$ THE GAP EQ. IMPEDANCE BECOMES EQUAL TO $\sim$ $700\ K\Omega$. WITH AN EQUIVALENT Q EQUAL TO $\sim \frac{R_{eq}}{R/Q} \cong 5700$ AS SEEN FROM THE BEAM IN STEADY CONDITIONS.

EACH TUBE has 40 KW PLATE POWER DISSIPATION.. FULL RATING OF THE TUBE IS AT 80 MHz → FOR 160 MHz we should REDUCE THE INPUT AND 60 KW of POWER ARE EASILY OBTAINED FROM TWO TUBES..

c) – BEAM LOADING (STEADY)..

$$\Delta C = \frac{I_{RF}}{2\pi f V_{RF}}$$

ASSUMING $I_{RF} = \sim 0.12$ A

$V_{RF} = 200$ KV

$\Delta C \cong 6 \; 10^{-16}$ =

$$\frac{\Delta f}{f} = \frac{1}{2}\frac{\Delta C}{C} = \frac{I_{RF}/2\pi f V_{RF}}{C} = \frac{1}{2}\frac{R}{Q}\frac{I_{RF}}{V_{RF}} = 3.69 \; 10^{-5}$$

$\Delta f \cong 6$ KHz IN THE WORTS CONDITIONS –

$$Z = \frac{R}{1 + j\, Q_L\left(\frac{f}{f_0} - \frac{f_0}{f}\right)}$$

IS THE IMPEDANCE OF THE CAVITY LOADED BY THE AMPLIFIER

$$\xi = f/f_0 - f_0/f \cong -2\frac{\Delta f}{f_0} = 7.5\ 10^{-5}$$

$$\xi Q_L = -0.427 \qquad \varphi = +24^\circ$$

D) – THE BEAM INDUCED VOLTAGE.

THE FIRST COMPONENT OF THE BEAM CURREN HAS A FREQUENCY EQUAL TO 4.45 MHz – THE FUNDAMENTAL COMPONENT, I.E. THE ONE WITH THE RF. FREQUENCY CORRESPOND TO THE 36^{Th} HARMONIC

FOR THIS COMPONENT THE GAP EQ. IMPEDANCE IS EQUAL TO:

$$Z = \frac{k}{1 + j\,\xi Q_L} = \quad ; \ |Z| = 643\ k\Omega$$

AND THE CORRESPONDING VOLTAGE IS $V_i \cong 77.8$ kV

THE NEX HARMONIC HAS NEARLY THE SAME AMPLITUDE BUT THE

DISSONANCE INCREASES :

$$\xi\Big)_{37} = \frac{2 * 4.45\ 10^6}{160\ \ 10^6} = 5.56\ 10^{-2}$$

$$Q_L\,\xi = 317 \quad \rightarrow \quad |Z| \cong 2.20\ k\Omega$$

AND THE INDUCED VOLTAGE DUE TO THE 37^h HARMONIC IS EQUAL TO 269 Volt AT, PRATICALLY 90°.

THE OTHER HARMONICS GIVE ALSO NEGLIGIBLE CONTRIBUTION