High Energy Facilities
Advanced Projects
BROOKHAVEN NATIONAL LABORATORY
Associated Universities, Inc.
Upton, New York 11973

RHIC Technical Note No. 6

RF SYSTEM PRELIMINARY DESIGN

M. Puglisi

September 14, 1984

RF System Parameters

RF Frequency ν_o = 26.743 MHz

Harmonic Number h = 342

RF total Voltage V_t = 1.2 MV

RF phase angle $\phi = \sim 2.3°$

Number of bunches n_b = 57

RF cycles per bunch ξ = 6

Average stored current I_a = 65 mA

Beam revolution frequency ν = 78.195906 KHz.

For a preliminary design of the RF system we should estimate the number of cavities required per ring and the maximum value for the stored current.

A reasonable guess for the cavity number is ~ 6; consequently V_c = 200 kV per cavity is required. Later the case of 12 cavities will be examined.

Following the criterion that the beam-induced voltage should be always much lower than the amplifier-induced voltage we could set an upper limit to the stored current.

An average output impedance of about 100 Ω can be obtained with a Class A feedback linear amplifier. With a Class C operation the average output impedance can easily reach more than ~ 400 Ω. Because the typical dc plate voltage of a power amplifier is in the park of ~ 10 kV then it follows that the transforming ratio should be near 20 and the transferred output impedance becomes >160 kΩ per cavity.

For generating 200 kV on 160 kΩ the amplitude of the synchronous beam harmonic should be equal to 1.25 amp. that in turn demands an average current near to 0.625 A.

With a somewhat narrow safety margin we could assume for the average current Im a value of 0.5 amp which would accelerate ~ 7 10^{11} particles per bunch.

A value for n equal to 5 10^{11} particles per bunch seem then very reasonable and we obtain the following limits:

$n = 5\ 10^{11}$	Particles per bunch	
$q = 8\ 10^{-8}$	Charge per bunch	(Coulomb)
$Q \doteq 4.56\ 10^{-6}$	Total charge	(Coulomb)
$I_m = 0.356$	Average current	(Amp)
$I1 = 0.713$	Synchronous harmonic	(Amp)
$RF = 2.80\ 10^5$	Beam eq. Impedance	(Ohm)
$Ip \cong 24.$	Maximum beam peak current	*(Amp)

* The beam is assumed to have parabolic distribution as follows:

$$I_b(t) = Ip - bt^2 \qquad -\tau/2 < t < \tau/2$$

Where τ is the beam time duration. Setting the boundary conditions we obtain:

1.5 ns

$$\int_{-\tau/2}^{+\tau/2} (Ip - bt^2)dt = Ip\tau - b\frac{\tau^3}{12} = q$$

$$Ip - b\left(\frac{\tau}{2}\right)^2 = o$$

Solving for Ip we obtain: $Ip = \frac{3q}{2\tau}$; $b = \frac{4Ip}{\tau^2}$

For $q = 8\ 10^{-8}$; $\tau = 0.5\ 10^{-8}$ $\quad Ip = 24$ Amps.

$b = 16\ 10^{16}$ A/sec^2

The Beam Loading

The following scheme could be used for describing the phenomenon as it is seen by the final amplifier.

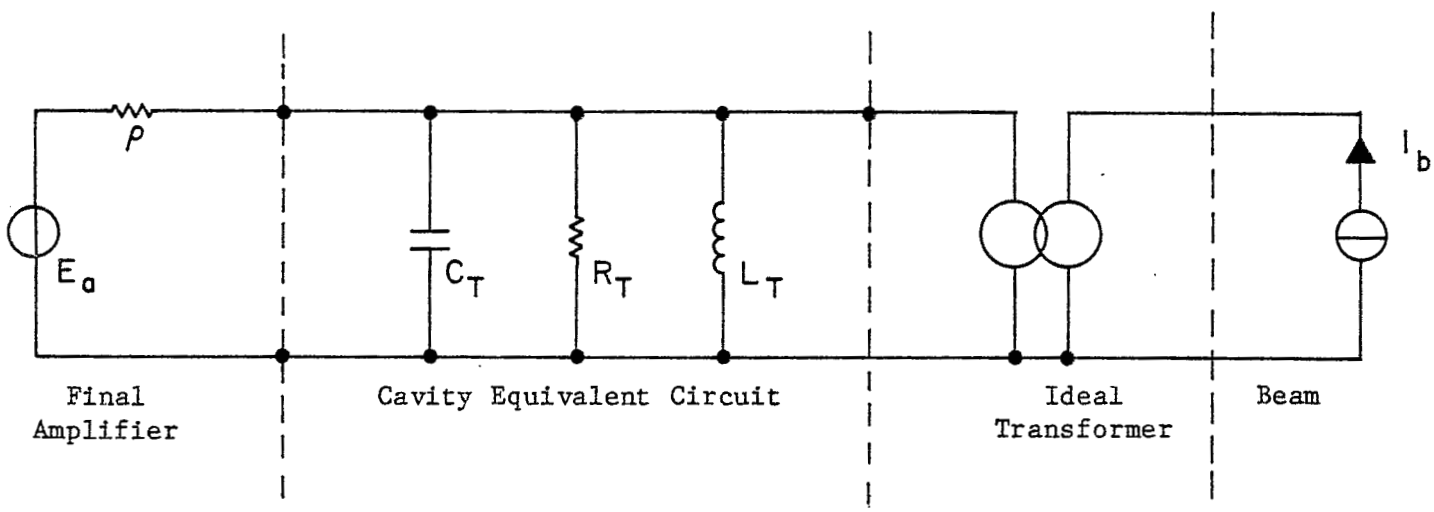

If V is the voltage across the cavity eq. circuit (that is V = Vcavity/N) then we can write:

$$\left\{G + j\left(\omega c_t + \frac{1}{\omega L_t}\right)\right\} V = \frac{Ea}{\rho} e^{j\alpha} + N\ I1\ e^{j\beta} \qquad (1)$$

$$G = \frac{1}{\rho} + \frac{1}{R_t};\ N = \text{Transforming ratio}$$

Where: α and β are phase angles and I1 is the beam current component that is synchronous with the RF voltage.

Equation (1) can be divided into two equations:

$$GV = \frac{Ea}{\rho}\cos\alpha + N\ I1\ \cos\beta$$
$$\left(\omega C_t - \frac{1}{\omega L_t}\right)V = \frac{Ea}{\rho}\sin\alpha + N\ I1\ \sin\beta$$

Now we want: $\underline{\alpha = 0}$ (that means that the final amplifier sees a real load) and $\underline{\beta = \pm 90°}$ because the stable phase is assumed nearly equal to zero. Consequently the system reduces to:

$$GV = \frac{Ea}{\rho}$$
$$\left(\omega C_t - \frac{1}{\omega L_t}\right) V = \pm N\ I1$$

Solving we obtain:

$$Ea = \left(1 + \frac{\rho}{R_t}\right) V$$
$$C_t = \frac{1}{\omega^2 L_t} \pm \frac{N\ I1}{\omega V} = Co \pm \Delta C$$

where, obviously, V is the voltage that appears at the terminals of the cavity equivalent circuit as is seen by the amplifier.

<u>Numerical Example</u>

The real cavity equivalent parameters are:

$$R = 0.8\ M\Omega,\ C = 50\ 10^{-12}\ F.,\ L = 6.949\ 10^{-7}\ H,\ V_c = 200\ kV.$$

Upon transformation (N = 20) we obtain:

$$R_t = 2000\Omega;\ C_t = 2\ 10^{-8}\ F;\ L_t = 1.737\ 10^{-9}$$
$$V = 200\ kV/20 = 10\ kV;\ I1_t = (2*0.356)*20 = 14.24\ A$$

(Where the subscript t indicates "Transformed Parameters). Assuming that the

amplifier output impedance is equal to 100Ω we obtain:

$$E_a = \left(1 + \frac{100}{2000}\right) 10.10^3 = 10.500\ 10^3$$

$$\Delta C = \frac{14.24}{1.696E8*10.10^3} = \pm\ 8.39\ 10^{-12}\ F.$$

It is easy, now, to calculate the total current I_t that the tube should supply:

If $$E_a = \left(1 + \frac{\rho}{R_t}\right)V$$ then:

$$I_t = \frac{E_a - V}{\rho} = \frac{1}{\rho}\frac{\rho}{R_t} V = \frac{V}{R_t} = \frac{10\ 10^3}{2\ 10^3} = 5A.$$

where I_t indicates the total current that should be provided by the tube. (We note that because $\beta = \pi/2$ then I_t do not depend upon I1).

The Cavity

In Fig. 1 is represented an axial section of a cavity that could work with a gap voltage of 200.kV.

From Super-Fish calculation we have νo = 26.75 MHz; Qo = 9030; R_s = 0.916 MΩ. and it follows that at 200. kV the power needed should be near to 22 kw.

The cavity eq. scheme is shown in Fig. 1a.

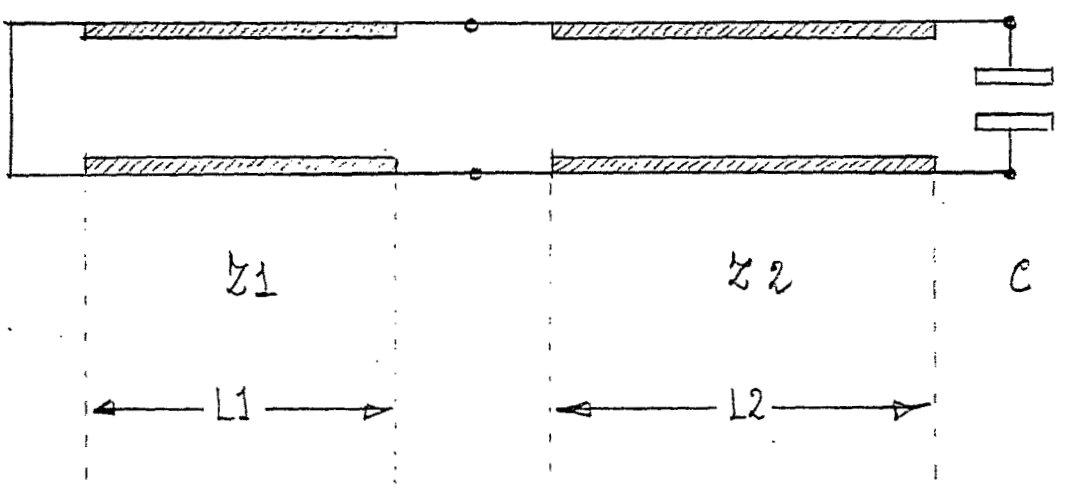

Fig. 1a. The cavity is schematized with a foreshortened coaxial line that contains a discontinuity in the characteristic impedance.

From the resonant frequency and the geometry of the coaxial line the value of the capacity C can be calculated as will be shown later on.

The cavity shape allows to have the driving tube directly connected to the low impedance side of the cavity* and we assume that the cavity with the tube can be schematized as shown in Fig. 2.

*The short stub can be in air so the tube can be easily connected to the cavity and adjusted for the wanted transforming ratio. Obviously the values for x and y are to be determined taking into account the total tube output capacity C_T.

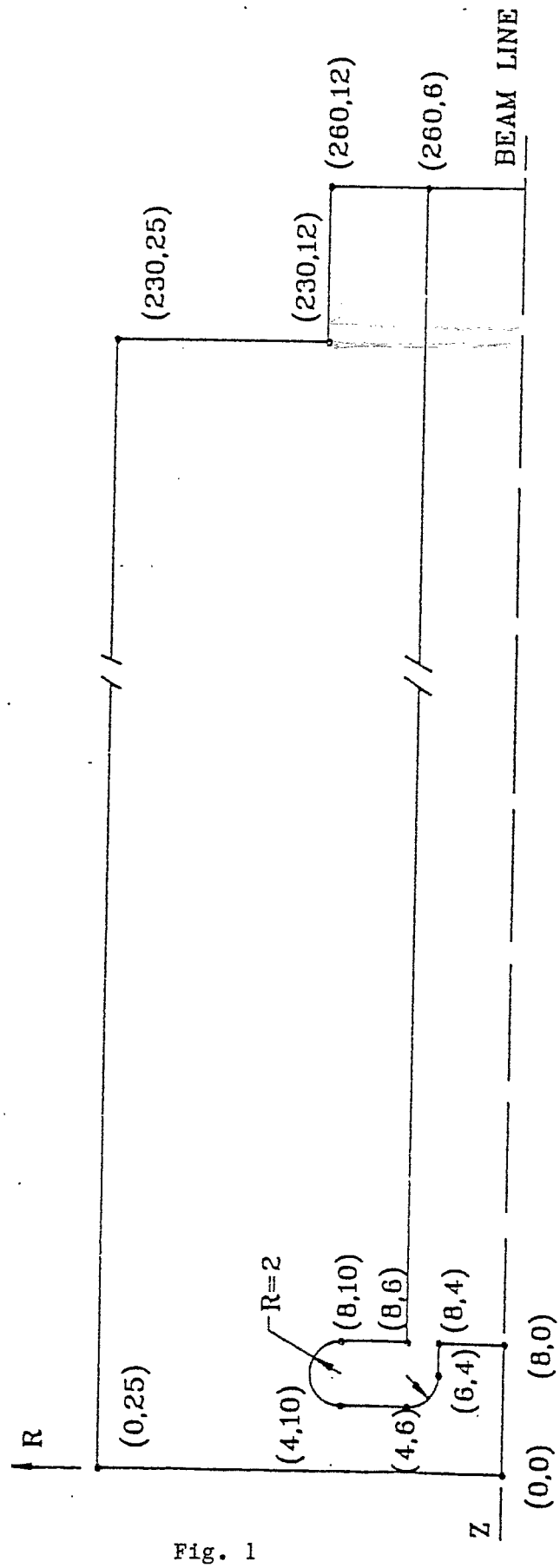
R
(0,25)
(4,10)
R=2
(8,10)
(8,6)
(4,6)
(6,4)
(8,4)
(8,0)
(0,0)
Z
(230,25)
(230,12)
(260,12)
(260,6)
BEAM LINE

Fig. 1

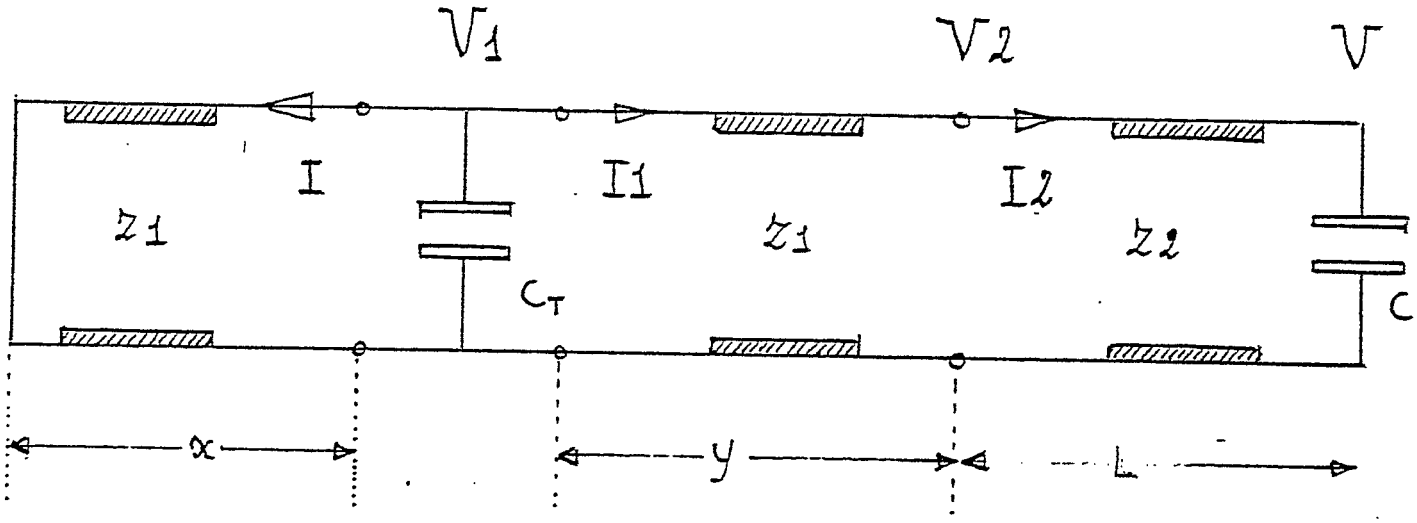

Fig. 2. C and C_T are the gap and the tube eq. capacities.
Z2 and L are the characteristic impedance and the electrical length of that portion of the cavity that is under vacuum.
Z1 and L1 = x + y define the portion of the cavity that is in air.

From the lines theory we have:

$$V2 = V\ (\cos \beta L - \omega c Z2\ \mathrm{SIN}\ \beta L) = AV$$

$$I2 = jV\ (\omega c \cos \beta L + \frac{1}{Z2}\ \mathrm{SIN}\ \beta L = jBV$$

where $\beta = \frac{2\pi}{\lambda} = \omega\sqrt{\varepsilon_o \mu_o}$ is the phase constant.

Transferring the voltage and the current at the junction with the tube we obtain:

$$V1 = V(A \cos \beta y - BZ1\ \mathrm{SIN}\ \beta y)$$

$$I1 = jV(B\cos \beta y + \frac{A}{Z1}\ \mathrm{SIN}\ \beta y)$$

From the first eq. because N = V/V1 is already known then we determine the value of y.

At this point all the quantitites are known and we should find the value of x for tuning the whole system.

For this purpose we set equal to zero the total admittance Y at the junction as follows:

If $\varepsilon = \frac{A}{BZ1}$ then we can write the R.H.S. component of the total admittance as:

$$Y(R) = I1/V1 = \frac{j}{Z1} \frac{1 + \varepsilon \text{ TAN } \beta y}{\varepsilon - \text{TAN } \beta y}$$

The L.H.S. of the total admittance is:

$$Y(L) = \omega C_T - \frac{1}{Z1 \text{ TAN } \beta x}$$

from the tuning condition:

$$Y = Y(R) + Y(L) = 0$$

we obtain:

$$\text{COT } \beta x = \omega C_T \ \beta x = \frac{1 + \varepsilon \text{ TAN } \beta y}{\varepsilon - \text{TAN } \beta y}$$

and the value of x is determined.

With the dimension indicated in Fig. 1 we find that the resonant frequency is equal to 26.75 MHz. (Super-Fish)

The output impedance of the coaxial structure is as follows:

$$Z = jZ2 \frac{\frac{Z1}{Z2} \text{TAN}(\beta L1) + \text{TAN}(\beta L2)}{1 - \frac{Z1}{Z2} \text{TAN}(\beta L1)*\text{TAN}(\beta L2)}$$

Because: $Z1 = 41.58\ \Omega$; $Z2 = 85.62$; and $\beta = 0.5604$ for $\nu o = 26.75$ MHz then $Z \cong j423\ \Omega$. Consequently the total gap capacitance (C_T) that tunes the cavity should be: $C_T = 1/\omega oZ) \cong 14$ PF.

It follows that:

$$A \cong 0.084;\ B = 0.0118$$

and the eq. $A \cos \beta y - BZ1 \text{ SIN } \beta y = 0.05$ (solved numerically) gives $y \cong 0.12$ m. Now $\varepsilon = 0.171$ and $C_T = \sim 70$ PF.

Consequently: $$\frac{1}{\text{TAN } (\beta x)} = 0.489 + \frac{1 + 0.0118}{0.171 - 0.069} = 10.40$$

Solving we obtain: $x = \sim 0.17$ m.

The Simplified Scheme

The above model is too complicated for a first design of the final amplifier and we consider the circuit given in Fig. 3.

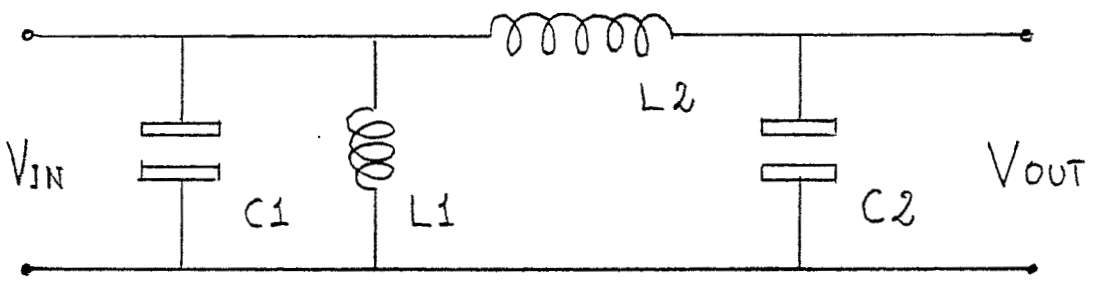

Fig. 3. Eq. circuit for the cavity loaded by the driving amplifier. C1 and C2 are given because they both depend upon the tube and the cavity.

Now the transforming ratio (no load) is as follows:

$$N = \frac{Vout}{Vin} = \frac{1}{1 - \omega^2 L2C2}$$

and we obtain:

$$L_2 = \frac{1 - 1/N}{\omega^2 C2}$$

The circuit should be tuned by the inductor L1. The input admittance can be written as follows:

$$Y(i) = \frac{1}{j\omega L1} + j\omega \frac{C_1 (1-\omega^2 L_2 C_2) + C_2}{1 - \omega^2 L_2 C_2}$$

setting Y(i) = 0 (that means "tuning"), solving for L1 and recalling the condition: $1 - \omega^2 L2C2 = \frac{1}{N}$ we obtain:

$$L1 = \frac{1}{\omega^2 C2} \frac{1/N}{1 + \frac{C1}{C2}\frac{1}{N}}$$

The calculations already shown are correct only for "no load conditions". It can be demonstrated that for quality factors of the cavity as low as ~ 100 the above formula are still valid for design purposes.

Simple checks made with the ECAP program shows both the validity of the previous calculation and the fact that the tube ignores the beam current if the beam is in quadrature with the gap voltage and an appropriate compensating capacity is added. The scheme prepared for ECAP calculations is shown in Fig. 4.

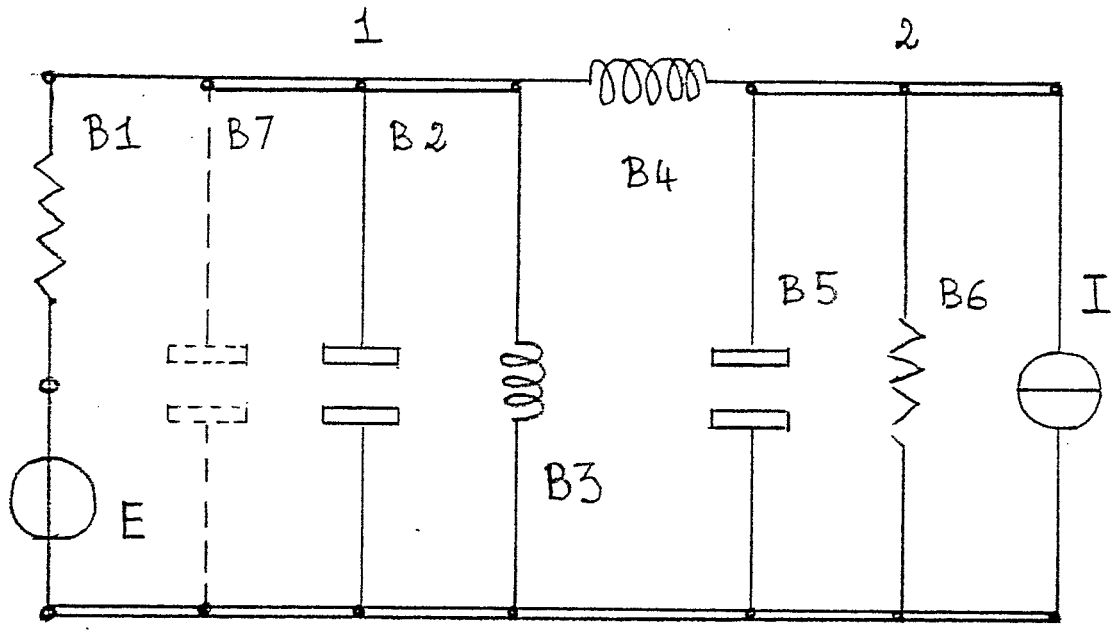

Fig. 4

```
ECAP.  AC ANALYSIS                                          09/11/84   09.07.24.        PAGE NO.   1

  1.          AC ANALYSIS
  2.   B1     N(0,1),R=100.E=11.912E3
  3.   B2     N(1,0),C=70.E-12
  4.   B3     N(1,0),L=3.2473E-8
  5.   B4     N(1,2),L=6.6018E-7
  6.   B5     N(2,0),C=50.E-12
  7.   B6     N(2,0),R=0.8E6
  8.          FREQUENCY=27E6
  9.          EXECUTE

 NO FATAL INPUT ERRORS DETECTED.  EXECUTION INITIATED.
```

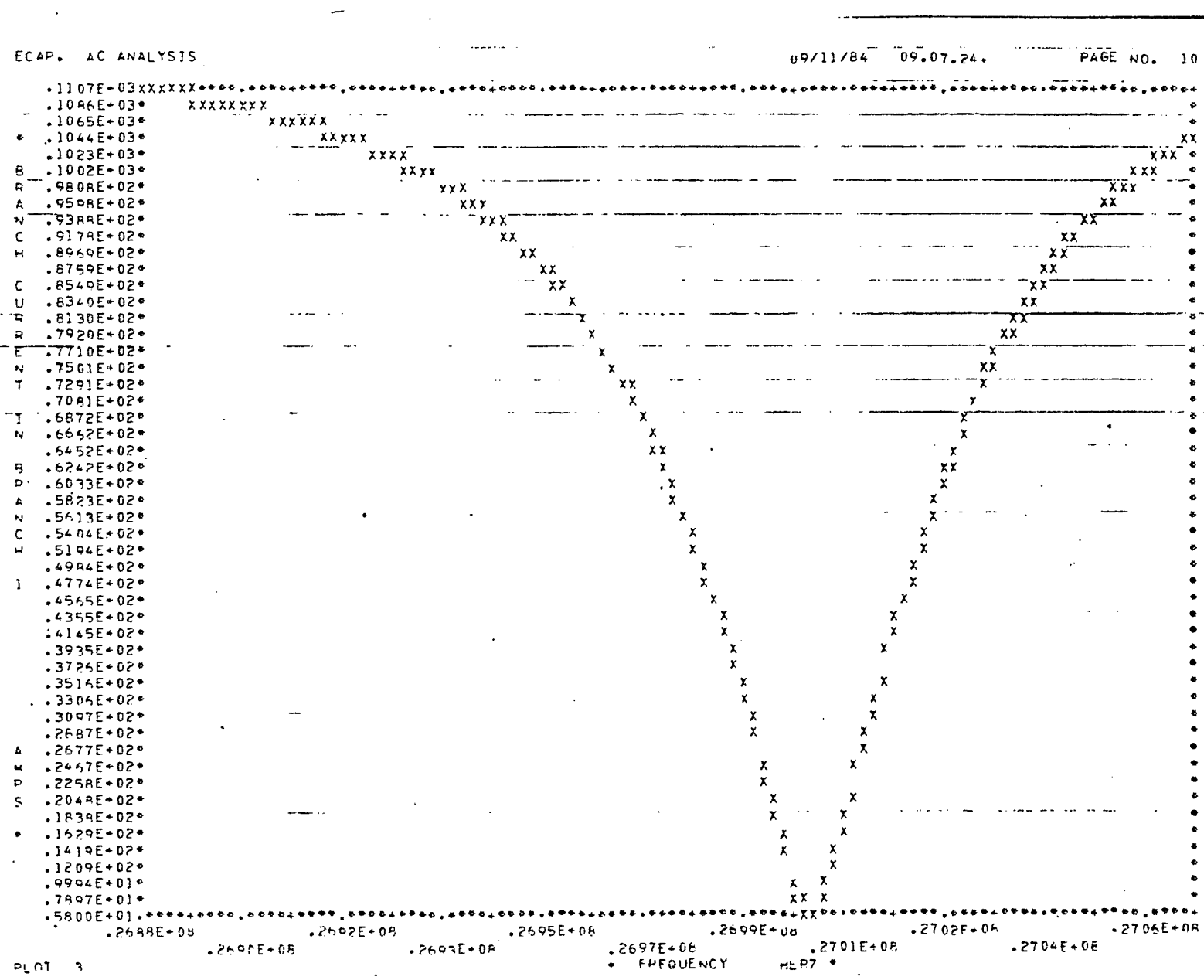

No Beam

```
ECAP.  AC ANALYSIS                                          09/09/84   19.02.21.        PAGE NO.   1

  1.          AC ANALYSIS
  2.   B1     N(0,1),R=100,E=11.912E3
  3.   B2     N(1,0),C=70.E-12
  4.   B3     N(1,0),L=3.2473E-6
  5.   B4     N(1,2),L=6.6018E-7
  6.   B5     N(2,0),C=50.E-12
  7.   B6     N(2,0),R=6.8E6,I=-0.7
  8.          FREQUENCY=27E6
  9.          EXECUTE

NO FATAL INPUT ERRORS DETECTED.  EXECUTION INITIATED.

ECAP.  AC ANALYSIS                                          09/09/84   19.02.21.        PAGE NO.  10
```

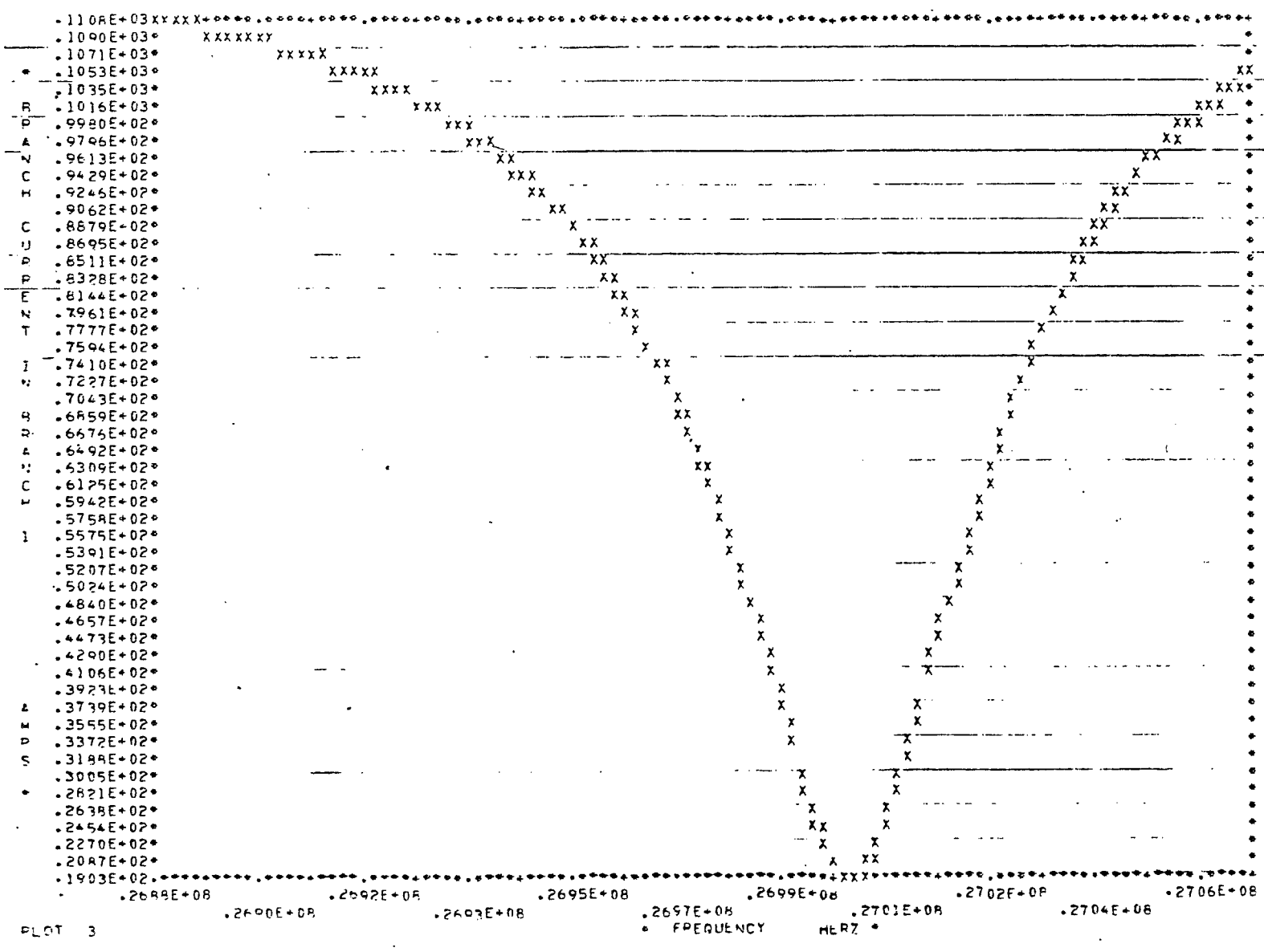

PLOT 3

Full Beam - No Compensation

```
ECAP.  AC ANALYSIS                                          09/11/84   10.57.21.        PAGE NO.   1

  1.          AC ANALYSIS
  2.   B1     N(0,1),R=100,E=11.912E3
  3.   B2     N(1,0),C=70.E-12
  4.   B3     N(1,0),L=3.2473E-6
  5.   B4     N(1,2),L=4.6018E-7
  6.   B5     N(2,0),C=50.E-12
  7.   B6     N(1,0),C=7.28E-12
  8.   B7     N(2,0),R=0.8E6,I=0.7/90
  9.          FREQUENCY=27E6
 10.          EXECUTE

NO FATAL INPUT ERRORS DETECTED.  EXECUTION INITIATED.
```

COMPENSATING CAPACITOR

```
ECAP.  AC ANALYSIS                                          09/11/84   10.57.21.        PAGE NO.  10
```

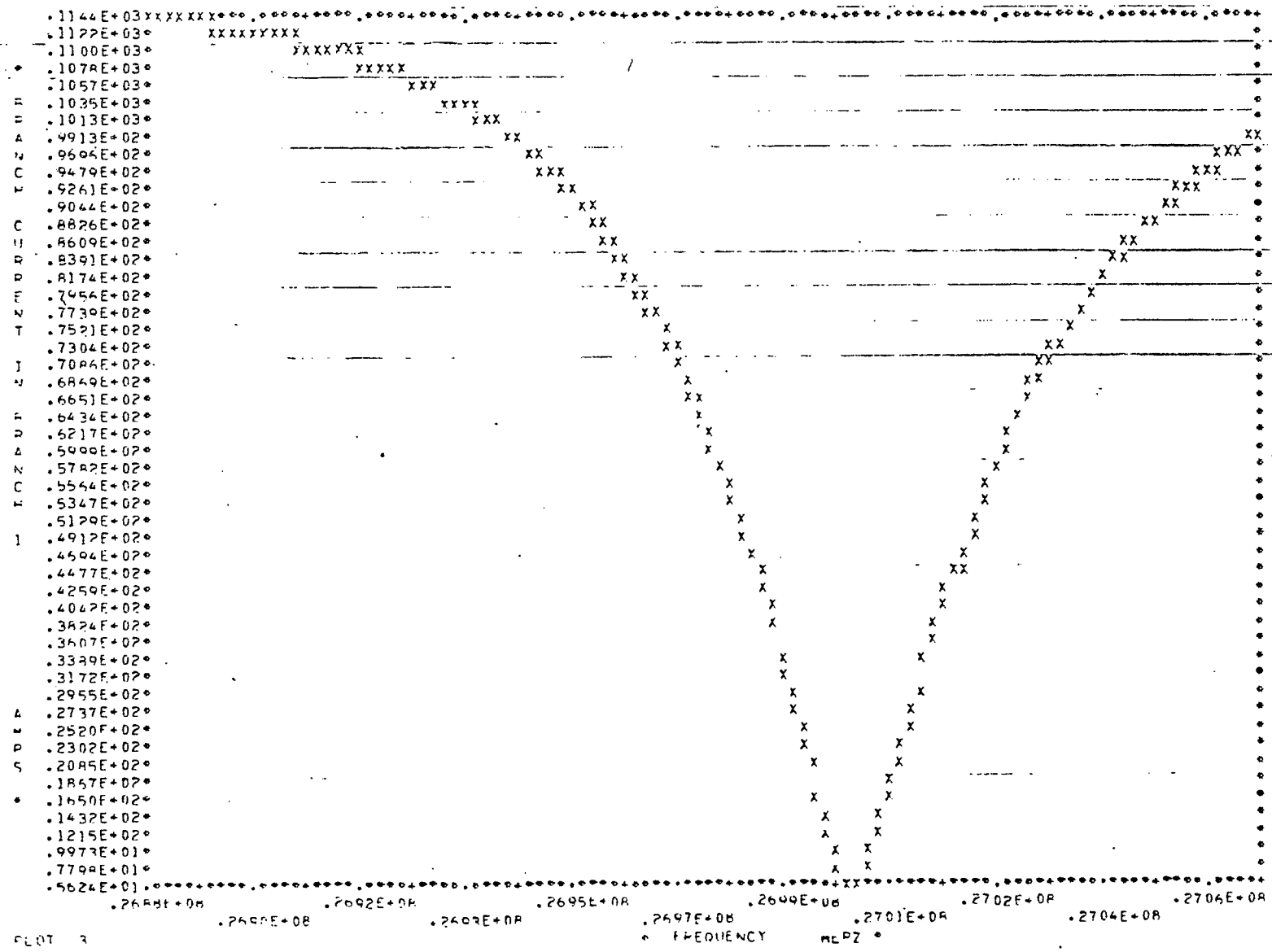

PLOT 3

Full Beam - Compensated Circuit

The Tube

Depending upon the shape of the accelerating cavity the power needed for 200 kV is always in the park of 20÷25 kW per cavity. The power delivered to the beam, even during the acceleration, is negligible. Consequently a tube capable of ~ 30 kW output power is surely enough.

A good candidate could be the Eimac triode 3CW30,000H3 ($1500 per tube) and the data sheets are included.

From the firm we had two recommended sets of operating conditions:

a) High Voltage Operation

DC and DE voltage	10 kV
DC grid bias	-450 V
Driving signal	630 V
Plate current (idle)	0.6 A
Plate current	3.16 A
Grid current	0.183 A
Driving power	120 W
Output power	21.5 kW
Load	1880 Ohms
Anode signal	~ 9000 Volts

b) Low Voltage Operation

DC anode voltage	5.5 kV
DC grid bias	-200 V
Driving signal	825 V
Plate current (idle)	2.5 A
Plate current	8 A
Grid current	1.1 A
Driving power	690 W
Output power	29 kW
Load	400 Ohms
Anode signal	4.8 kV

In both the operating conditions the dynamic anode impedance can be considered as equal to 330Ω.

From the two sets it is evident that the tube can be operated as a Class A-B amplifier (very low output impedance). Nevertheless, another recommended typical Class C operation is as follows:

DC Anode Voltage	10	kV
DC grid bias	-800	V
Driving signal	1160	V
DC anode current (idle)	0.0	Amp.
DC anode current	6	Amp.
DC grid current	0.315	Amp.
Driving power	365	Watts
Output power	42	KW
Load impedance	750	Ohms
Anode signal	8000	V

In this condition the output impedance of the tube is no longer definible. Any model should be analyzed with the state variable method and the tube should be treated as a highly non-linear device. However, it can be shown that even a Class C operation could be satisfactory if an appropriate tuning is provided for.

Modeling the Tube

We assume that, to a first approximation, the following equation holds:

$$Ip = \frac{1}{\rho}\left(V_p + \mu V_g\right)^{\alpha}; \; Ip > 0. \qquad (1)$$

Where V_p and V_g are respectively the anode and grid voltages with reference to the cathode and α is normally near to 3/2. Eq. (1) can be rewritten as follows:

$$\sqrt[\alpha]{\rho} * \sqrt[\alpha]{I_p} - \mu V_g = V_p \qquad (2)$$

Assuming $\alpha = 1.5$ the constants ρ and μ can be determined from two points wisely chosen on the tube data sheet.

Let $\sqrt[\alpha]{\rho} = x$ then we have:

$$\begin{aligned} x \sqrt[\alpha]{I1_p} - \mu V1g &= V1_p \\ x \sqrt[\alpha]{I2_p} - \mu V2g &= V2_p \end{aligned} \qquad (3)$$

where the subscript 1 and 2 refer to the points already chosen.

Solving with the Kramer rule we obtain:

$$x = \frac{\begin{vmatrix} V1p & -V1g \\ V2p & -V_2g \end{vmatrix}}{\begin{vmatrix} \sqrt[\alpha]{I1p} & -V1g \\ \sqrt[\alpha]{I2p} & -V2g \end{vmatrix}} = \frac{V_1p\ V2g - V_2p\ V_1g}{V2g\ \sqrt[\alpha]{I1p} - V1g\ \sqrt[\alpha]{I2g}} \qquad (4)$$

$$\mu = \frac{\begin{vmatrix} \sqrt[\alpha]{I1p} & V1p \\ \sqrt[\alpha]{I2p} & V2p \end{vmatrix}}{\begin{vmatrix} \sqrt[\alpha]{I1p} & -V1g \\ \sqrt[\alpha]{I2p} & -V2g \end{vmatrix}} = \frac{V1p\ \sqrt[\alpha]{I2p} - V2p\ \sqrt[\alpha]{I1p}}{V2g\ \sqrt[\alpha]{I1p} - V1\ \sqrt[\alpha]{I2p}} \qquad (5)$$

When x is known then $\rho = x^{\alpha}$. Obviously the model is not very accurate. Nevertheless it is always very useful because it allows to take into account both the variation of the internal resistance and the phenomenon of the cut-off that, in many cases, could be extremely important. (For the indicated tube a possible choice could be $\rho = 30\ 10^3$, $\mu = 20$ with the condition already seen $\alpha = 1.5$).

EIMAC
Division of Varian
SAN CARLOS
CALIFORNIA

3CW30,000H3

MEDIUM-MU

WATER-COOLED
POWER TRIODE

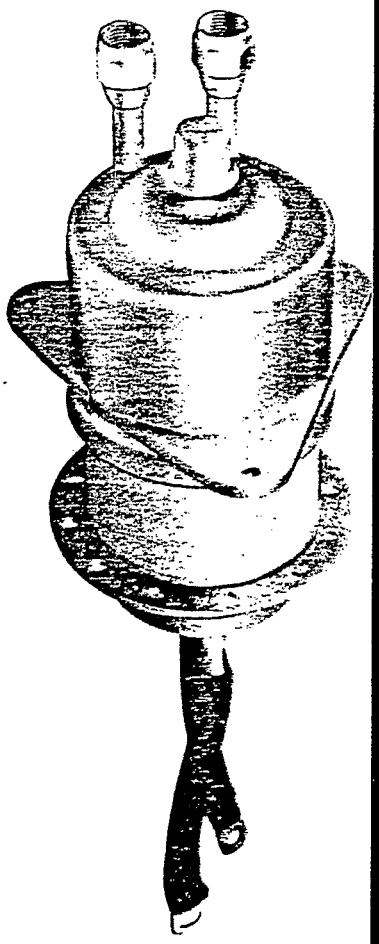

The Eimac 3CW30,000H3 is a water-cooled, ceramic-metal power triode designed primarily for use in industrial radio-frequency heating services. Its water-cooled anode is conservatively rated at 30 kilowatts of plate dissipation with low water flow and pressure drop.

Input of 60 kilowatts is permissable up to 90 megahertz. Plentiful reserve emission is available from its one kilowatt filament. The grid structure is rated at 500 watts making this tube an excellent choice for severe applications.

GENERAL CHARACTERISTICS

ELECTRICAL

Filament: Thoriated-Tungsten	*Min.*	*Nom.*	*Max.*	
Voltage		6.3		V
Current	152		172	A
Amplification Factor		20		
Interelectrode Capacitances, Grounded Cathode:				
Grid-Filament	48		58	pF
Plate-Filament	1.2		1.5	pF
Grid-Plate	30		38	pF
Frequency for Maximum Ratings			90	MHz

MECHANICAL

Base	See Outline
Operating Position	Vertical, base up or down
Cooling	Water and Forced Air
Maximum Operating Temperatures:	
Ceramic-to-Metal Seals	250°C
Maximum Dimensions:	
Height	See Outline
Diameter	See Outline
Net Weight	12 pounds

(Effective 11-1-68) © 1965, 1968 by Varian

Printed in U.S.A.

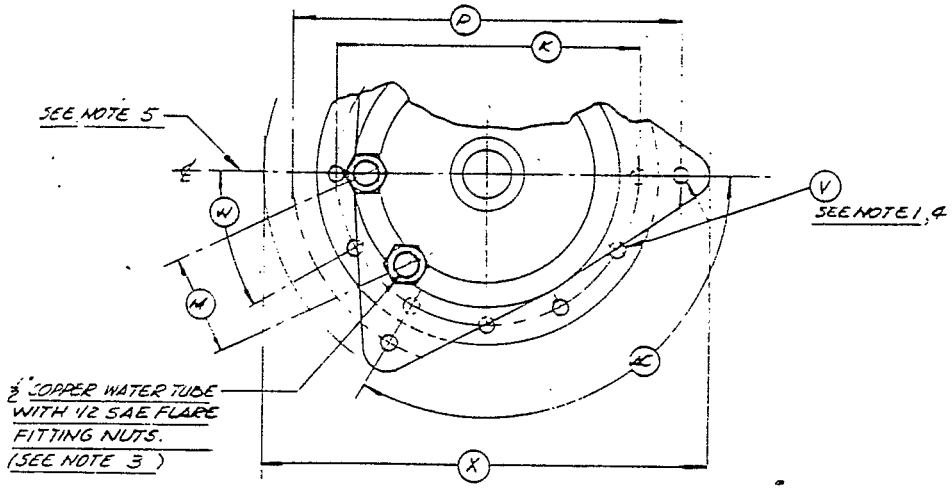

DIMENSIONS IN INCHES			
DIMENSIONAL DATA			
DIM.	MIN.	MAX.	REF.
A	6.050	6.250	
B	.860	.890	
C	.720	.760	
F	3.792	3.832	
H	.530	.700	
J			.125
K	4.025	4.045	
L	5.030	5.090	
M			1.500
N	.375		
P	5.990	6.010	
R	.200	.860	
S	3.300	3.500	
T	3.950	4.100	
U	8.250	8.750	
V			.250
W	29°	31°	
X			6.750
Y			.250
Z			2.000
AA	8.500	9.000	
AB			2.000
AC	118°	122°	
AD			.390

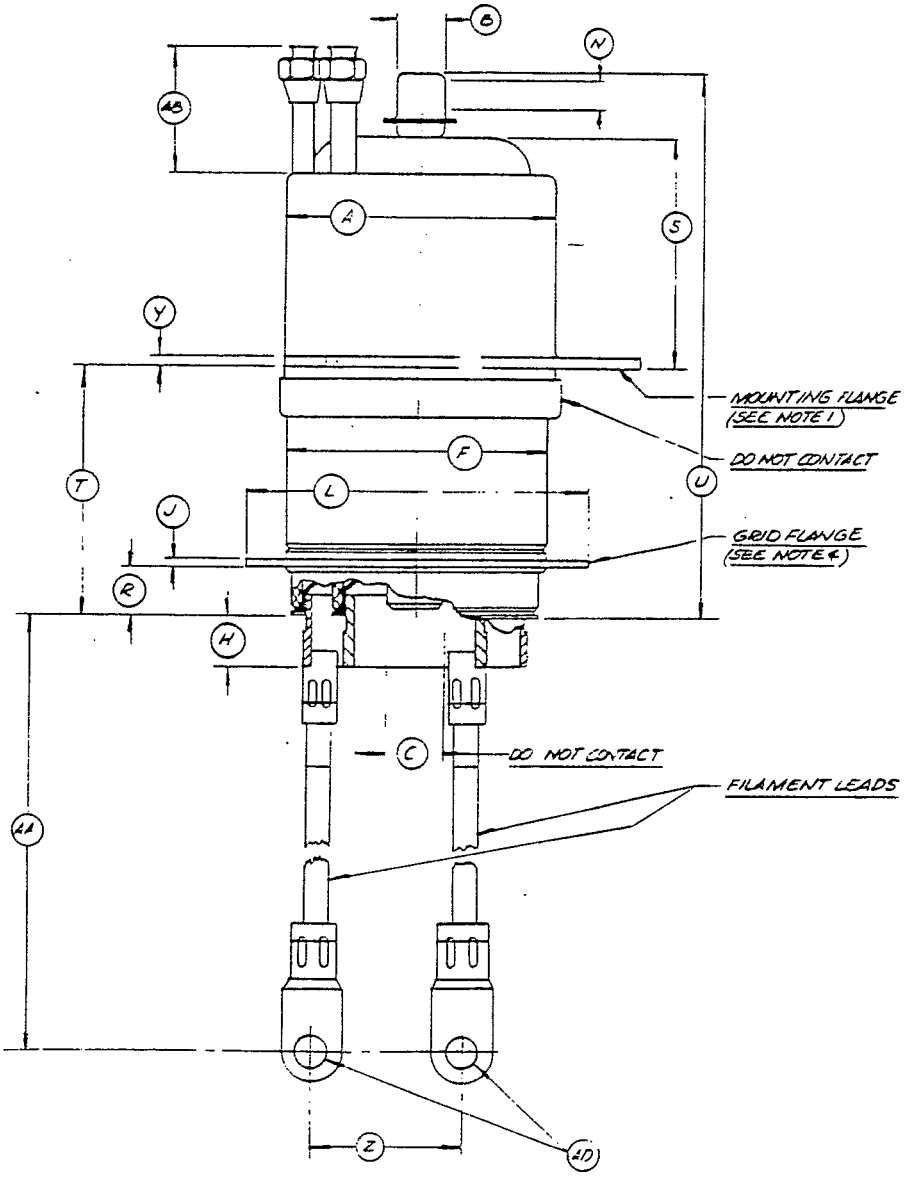

NOTES:

1. 3 MOUNTING HOLES IN MTG FLANGE.
2. REF. DIMS. ARE FOR INFO. ONLY AND ARE NOT REQ'D FOR INSP. PURPOSES.
3. EITHER FITTING CAN BE USED AS INLET OR OUTLET.
4. 12 HOLES IN GRID FLANGE
5. MTG. FLANGE, FIL. LEADS & WATER FITTINGS ARE TO BE ORIENTED AS SHOWN.

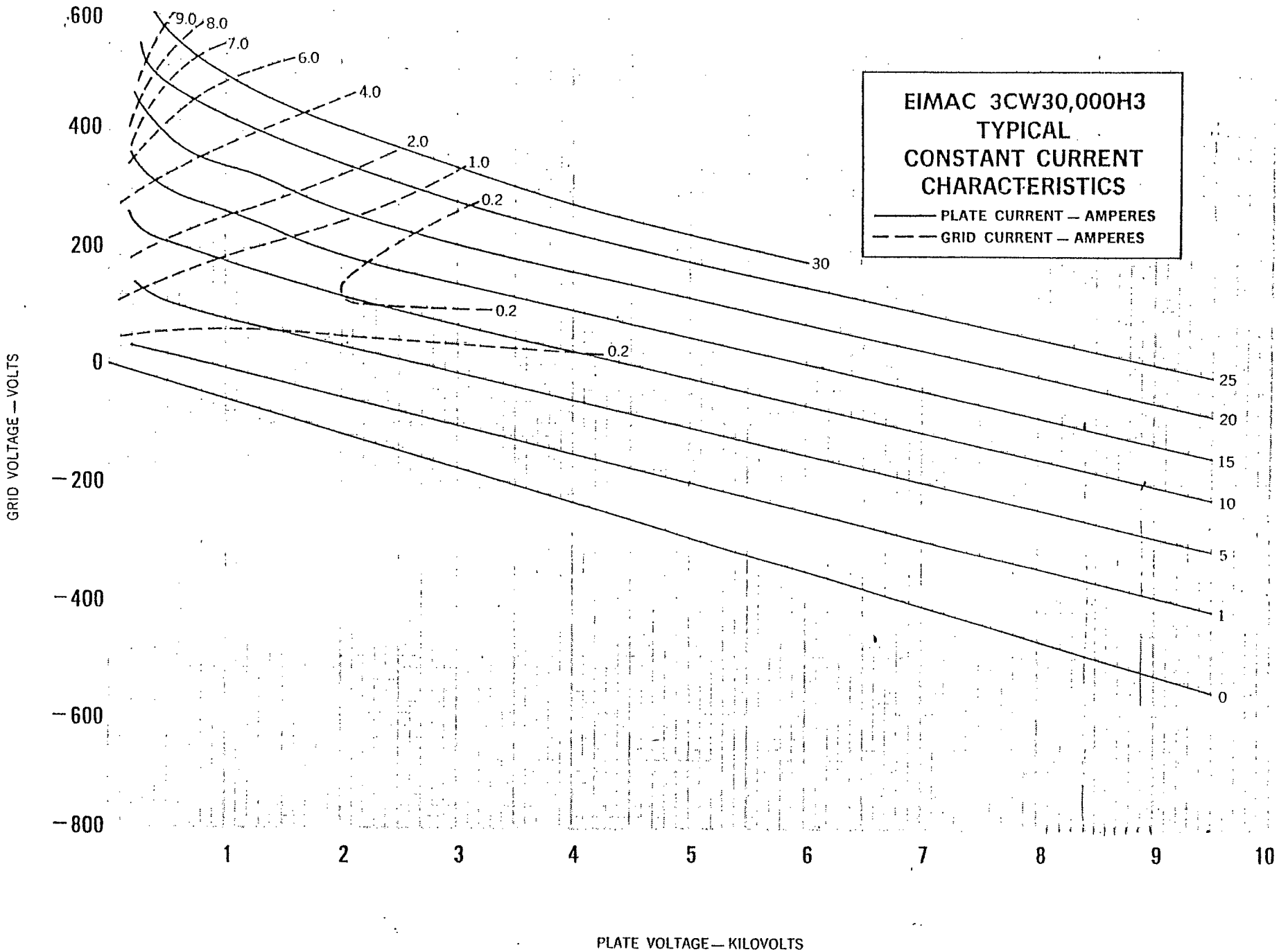
EIMAC 3CW30,000H3
TYPICAL
CONSTANT CURRENT
CHARACTERISTICS
PLATE CURRENT — AMPERES
GRID CURRENT — AMPERES
9.0
8.0
7.0
6.0
4.0
2.0
1.0
0.2
0.2
0.2
30
25
20
15
10
5
1
0
600
400
200
0
−200
−400
−600
−800
GRID VOLTAGE — VOLTS
1
2
3
4
5
6
7
8
9
10
PLATE VOLTAGE — KILOVOLTS

The Beam Loading Transient Analysis

The steady state sinusoidal linear analysis already made shows that if the beam is always in quadrature with the accelerating voltage then the beam current (transformed) do not affect the final tube provided the amplifier is properly tuned. Unfortunately the real situation is quite different because the beam passes throughout the cavity in a very short time.

Each beam occurs every 6 periods of the RF voltage, and the tube could be operated in Class C.

A simple model for simulating this situation is given in Fig. 4.

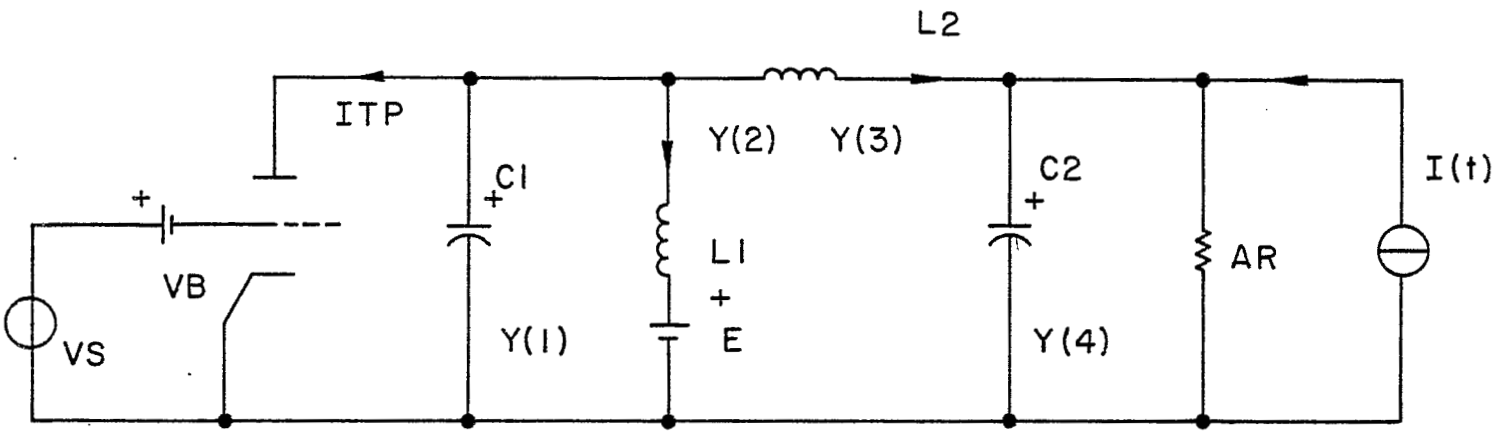

Fig. 4. Equivalent circuit for the transient non-linear analysis. The state variables are as follows: Y(1); Y(4) are voltages; Y(2); Y(3) are currents.

After some elementary algebra we obtain the following set of differential equations:

$$\dot{Y}(1) = (-Y(2) - Y(3) - ITP)/C1$$
$$\dot{Y}(2) = (Y(1) - E)/L1$$
$$\dot{Y}(3) = (Y(1) - Y(4))/L2$$
$$\dot{Y}(4) = (IT + Y(3) - Y(4)/AR)/C2$$

The beam current could have parabolic distribution and must be periodic with period equal to 6T. That is we have a bunch every 6 RF cycles. The first period is defined as follows:

$$I(t) = -Ip \quad 1. - \left(\frac{2t - T}{\tau}\right)^2 \qquad \frac{T-\tau}{2} < t < \frac{T+\tau}{2}$$

$$I(t) = 0.0 \qquad 0.0 < \frac{T-\tau}{2}$$

$$I(t) = 0.0 \qquad \frac{T+\tau}{2} < t < 6T$$

The model for the tube current is not critical. Obviously the cut-off and the dependency of the anode current upon the anode voltage are the most important factors.

From the data sheet already seen we could assume:

$$I_{pt} = 0.3\ 10^{-5}\ (V_{pk} + 20\ V_{gk})^{1.5}$$

where E = dc anode voltage = 11 kV; Vb = dc grid bias =-550;

V_s = Peak driving voltage = 700.V; V_{pk} = Y(1)

$V_{gk} = V_s$*SIN ωt + Vb

The system was integrated with the normal fourth order Runge-Kutta method and the results show that the tube does not see the beam peak current and that the gap voltage remains reasonably sinusoidal even if the cut-off occurs.

In Fig. 1 the beam current and the gap voltage are represented for two different values of the compensating capacity $\Delta C_T \cong 11$ pF and $\Delta C_E \cong 13$ pF. Obviously the slope changes (because the amplitudes change) but the waveform remains sinusoidal. In both cases the model was working on Class B condition.

We conclude that the standard linear analysis is applicable for the system "Power Amplifier - Acc. Cavity."

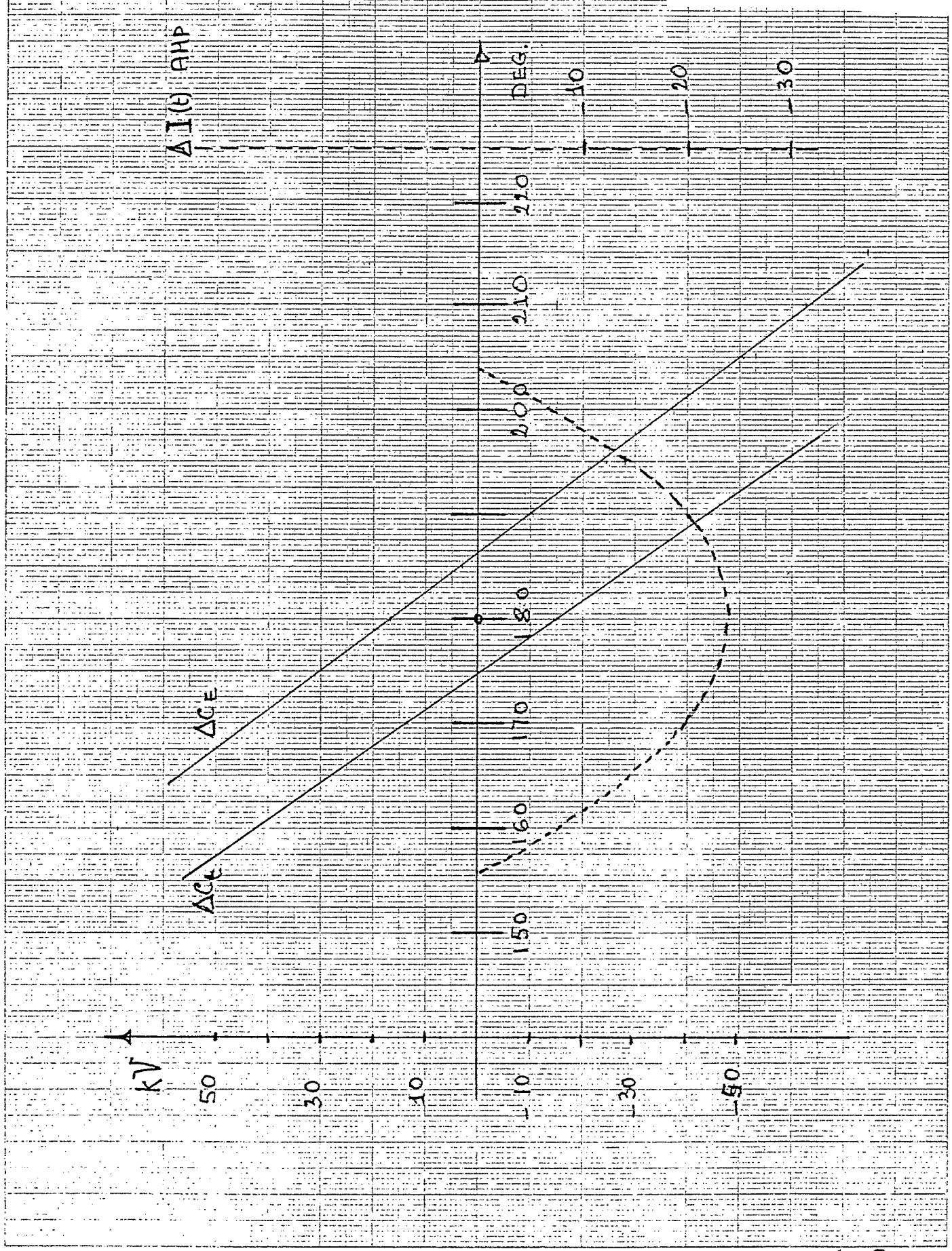
ΔI(t) AHP
DEG.
10
20
30
220
210
200
180
170
160
150
ΔCE
ΔCE
KV
50
30
10
-10
-30
-50

Fig. 1

The Power Amplifier

1. General Considerations

The final amplifier should exhibit a very low output impedance mainly because this impedance appears across the accelerating cap, at best, multiplied by the square of the voltage transforming ratio ($N \cong 20$).

The cathode follower amplifier could be used but at 27 MHz the stabilization becomes critical and, on the other hand, the achievable output impedance is really low only on a very narrow frequency range.

The grounded grid amplifier is always very stable but its output impedance is very high (~ 40 kΩ for Class A linear operation using the Eimac tube 3CW30,000H3). The grounded cathode amplifier offers a relatively low output impedance but must be neutralized in order to achieve the wanted stability.

The neutralizing techniques are well-known and for each one there are advantages and disadvantages.

Among the very many the one which could offer a high degree of feedback is the old and practically abandoned "split grid neuting circuit" that is shown in Fig. 1.*

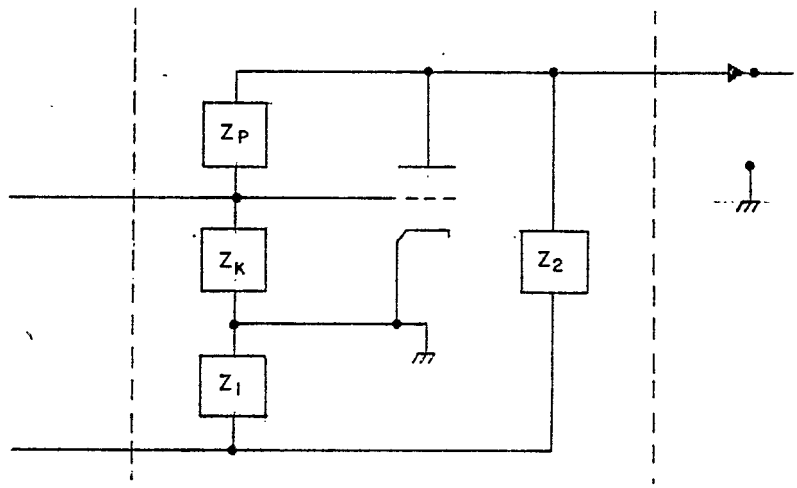

Fig. 1. Split grid neutralized amplifier.

*Fig. 1 is only a functional diagram where the input and output circuits (the so-called 'external circuits') are not shown. Normally the Z impedances are purely capacitive. When the grid current is not negligible then Zk and Zl becomes complex.

Where the impedances Z1 and Z2 take into account C_{pk} and C_{gp} that are the inherent capacitances of the tube.

It is well-known that over a theoretically infinite range of frequencies a perfect neutralization occurs if and only if:

$$\frac{Zp}{Z_k} = \frac{Z_2}{Z_1} \qquad (1)$$

If the neutralizing condition is fulfilled then the external grid and plate circuits are connected across the opposing vertices of a balanced bridge and, consequently, the circuits ignore each other. Nevertheless the tube is an active element and the impedances Zp; Z_k; C1; C2 creates a negative feedback pattern that strongly reduces the amplifier output impedance.

The simplest possible equivalent scheme for the amplifier is given in Fig. 2.

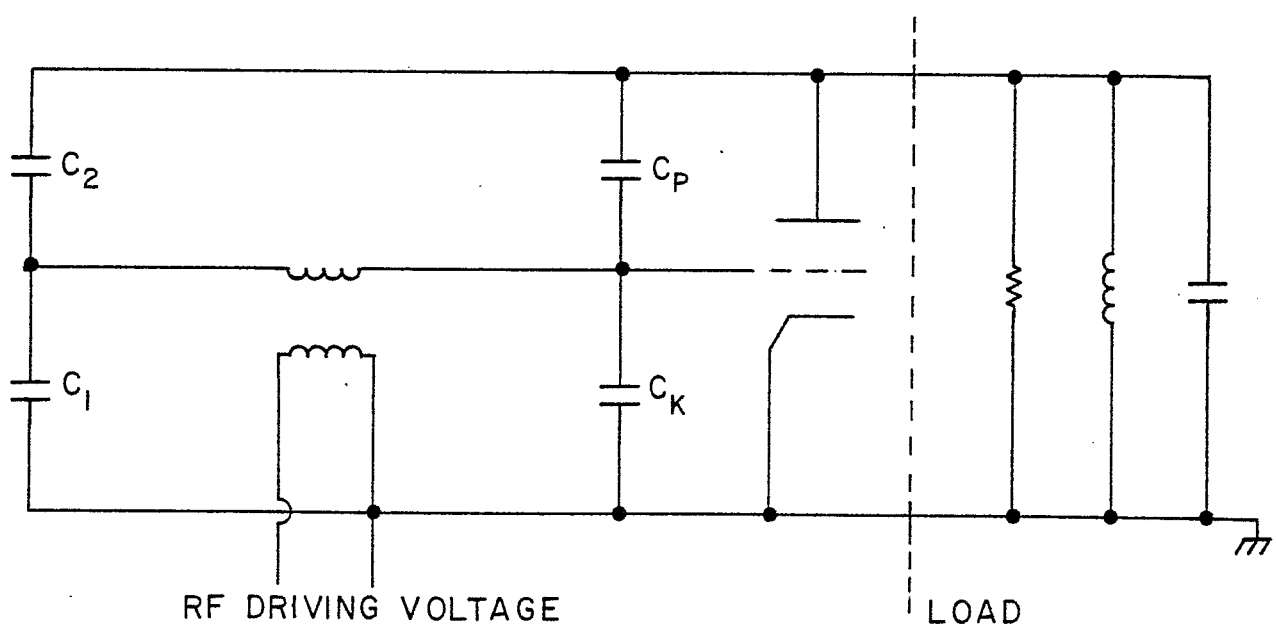

Fig. 2. The neutralized amplifier connected to the load and to the driver.

And on Fig. 3 is drawn the equivalent scheme for calculating the amplifier output impedance.

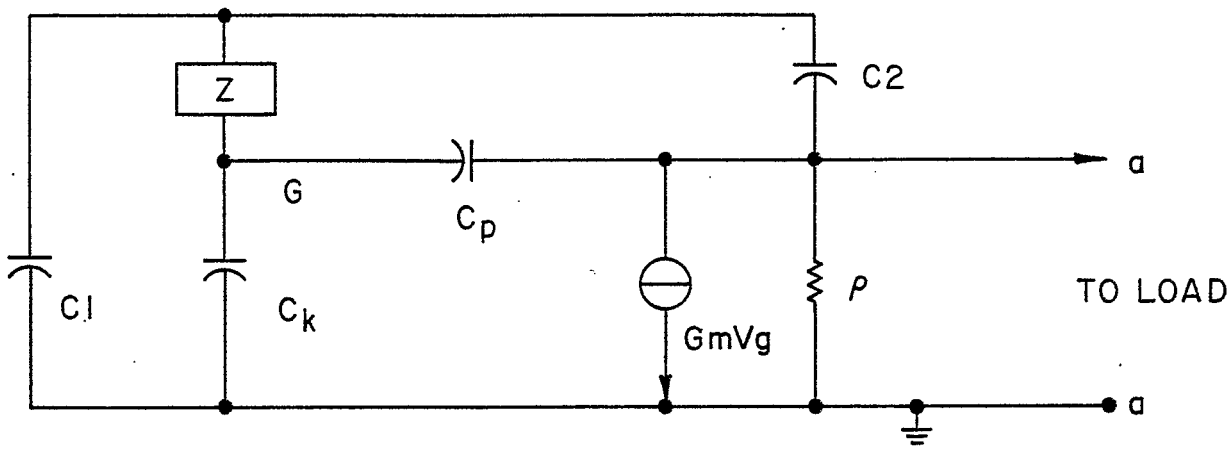

Fig. 3. Equivalent scheme for the neutralized amplifier. The impedance Z takes into account all the grid external circuitry.

In the worst case we could assume that $\rho = \infty$; moreover if we assume

$$C_k = C1; \; Cp = C2$$

the neutralizing condition is satisfied and the calculations are somewhat simpler. Under the previous hypothesis the admittance seen from the terminals aa is as follows:

$$Y(aa) = \frac{Gm + 2j\omega c_2}{1 + \frac{C1}{C2}}$$

that does not depend neither upon Z nor upon the load. This means that the output impedance depend upon the parallel combination of a resistor Req and a capacitor Ceq.

$$Req = \frac{1 + C1/C2}{Gm}$$

$$Ceq = \frac{2}{\frac{1}{C1} + \frac{1}{C2}} \qquad (2)$$

It should be observed the resistive component is effective only if the tube is "on". This is not the case for the capacitive component that is always present.

It can be shown that if the impedances Zp; Z_k; Z_2; Z_1 are purely capacitive and the neutralizing condition is fulfilled then:

$$C_{pt} = \frac{C1 + C_k}{1 + C_k/Cp}$$

$$C_{gt} = \frac{Cp + C_k}{1 + C_k/C1}$$

where C_{pt} and C_{gt} are the total capacities that appear respectively on the plate and on the grid circuits while C1 is arbitrary and determines the degree of feedback we like to introduce. (Increasing C1 the feedback is reduced and the normal trade-off is to make C1 nearly equal to twice the value of C_k).

2. The Linear Analysis

The triode Eimac 3CW 30,000H3 can be linearized using the following parameters:

Anode dynamic resistance	$\rho = 400\Omega$
Transconductance	$G\mu = 0.05$ Siemens
Grid to cathode capacity	$C_k = 60$ pf
Grid to anode capacity	$C_p = 40$ pf

and in Fig. 3 is given the amplifier eq. scheme prepared for the ECAP ac analysis. It should be noted that we assumed a load of about 700 Ω. That surely represents the worst case (cavity shunt impedance ~ 0.8 MΩ; anode ac voltage ~ 6000 V; N = 33.8).

FINAL AMPLIFIER EQ. MODEL
FOR AC. ECAP ANALYSIS

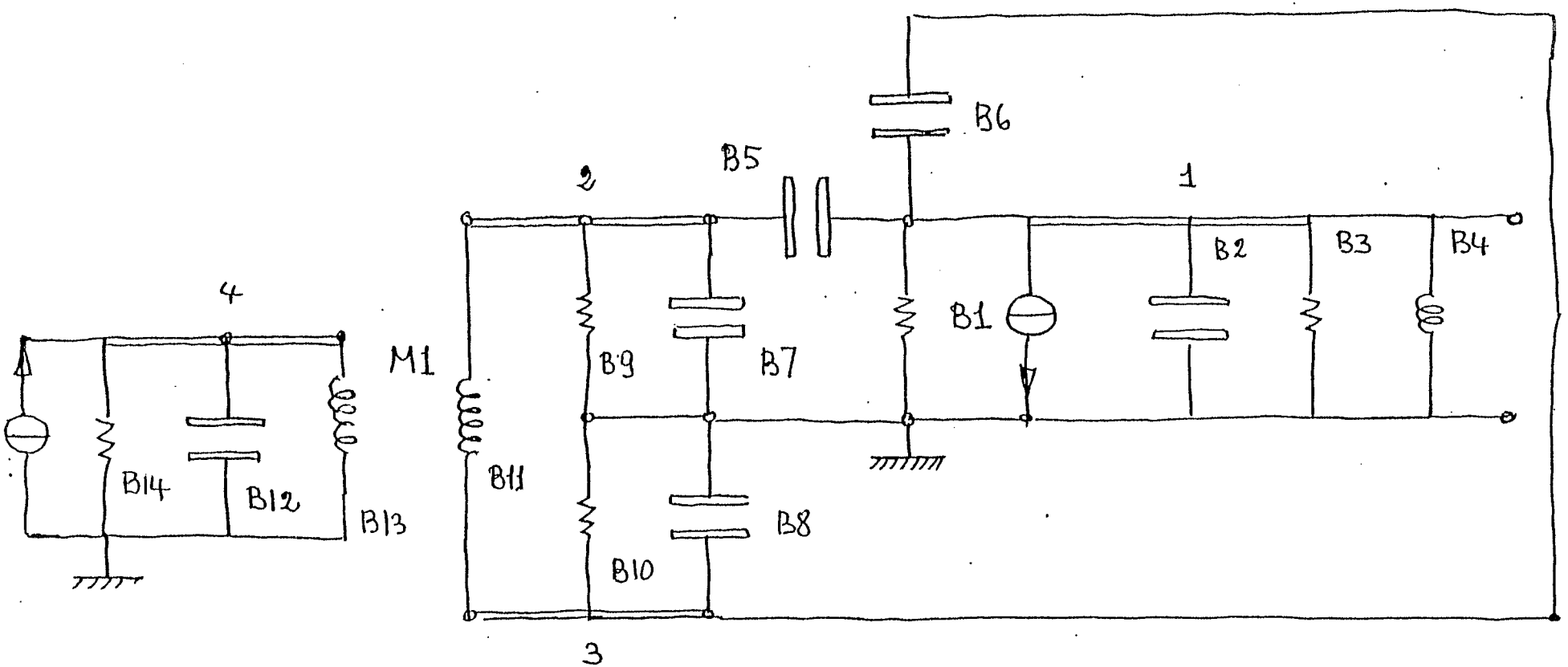

M1 B(13, 11), L = 0.1 E-7 B1 N(1, 0), R = 400.

T1 B(9, 1), GM = 0.05

B15 N(1,0), R = 1.E6, I = 1. IS USED ONLY FOR MEASURING THE OUTPUT IMPEDANCE.

The first three plots give information for the transfer functions. Namely the ratio NV1/NV4 = 0.65 should be interpreted as follows.

The input impedance is equal to ~ 8.6 kΩ and if we need 6 kV on the output we need a driving current near to ~ 1.07 amp. That means ~ 5. kW, while the amplifier is generating 6 kV on 700 Ω which means an output power Wo equal to ~ 25.7 kW.

The real voltage gain Go should be measured between the driving node (NV(2)) and the driven node (NV(1)) and we find Go = 12.29.

On the last plot we have the output impedance that, due to the feedback, is reduced to 54 Ω.

It should be observed that the situation we have simulated is really the worst case because we assumed that the grid circuit is loaded with 2000 Ω (see the listing for ECAP).

Normally much larger resistors are used and the input impedance can be easily raised by a factor of 3.

Moreover if an anode voltage of 10 kV is required then the anode load should be near to 2000 Ω.

Consequently we conclude that in any case the split-grid neutralized amplifier would be effective.

```
ECAP.  AC ANALYSIS                                          09/19/84   09.37.46.      PAGE NO.   1

  1.          AC ANALYSIS
  2.   B1     N(1,0),R=400.
  3.   B2     N(1,0),C=0.40E-10
  4.   B3     N(1,0),R=700.
  5.   B4     N(1,0),L=0.35768E-6
  6.   B5     N(1,2),C=40.E-12
  7.   B6     N(1,3),C=40.E-12
  8.   B7     N(2,0),C=0.1E-9
  9.   B8     N(3,0),C=0.1E-9
 10.   B9     N(2,0),R=0.1E4
 11.   B10    N(3,0),R=0.1E4
 12.   B11    N(2,3),L=0.49638E-6
 13.   B12    N(4,0),C=0.70E-10
 14.   B13    N(4,0),L=0.49638E-6
 15.   B14    N(4,0),R=1.E6,I=1.
 16.   M1     B(13,11),L=0.1E-7
 17.   T1     B(9,1),GM=0.05
 18.         FREQUENCY=27.E6
 19.         EXECUTE

NO FATAL INPUT ERRORS DETECTED.  EXECUTION INITIATED.
```

FINAL AMPLIFIER EQ. MODEL
FOR AC ECAP ANALYSIS

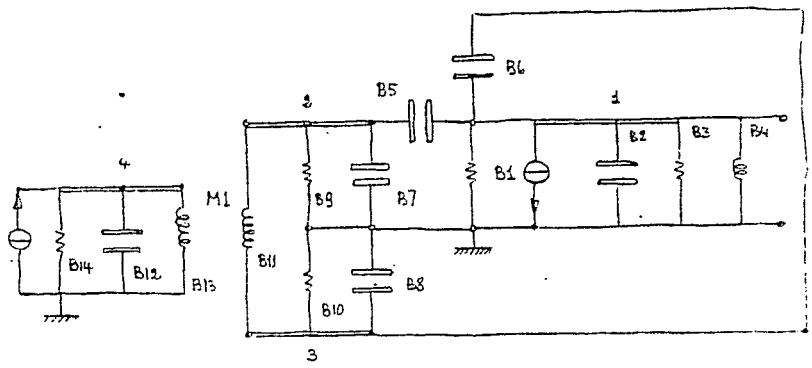

M1 B(13,11), L = 0.1 E-7 B1 N(1,0), R = 400.

T1 B(9,1), GM = 0.05

ECAP. AC ANALYSIS 09/19/84 09.37.46. PAGE NO. 4

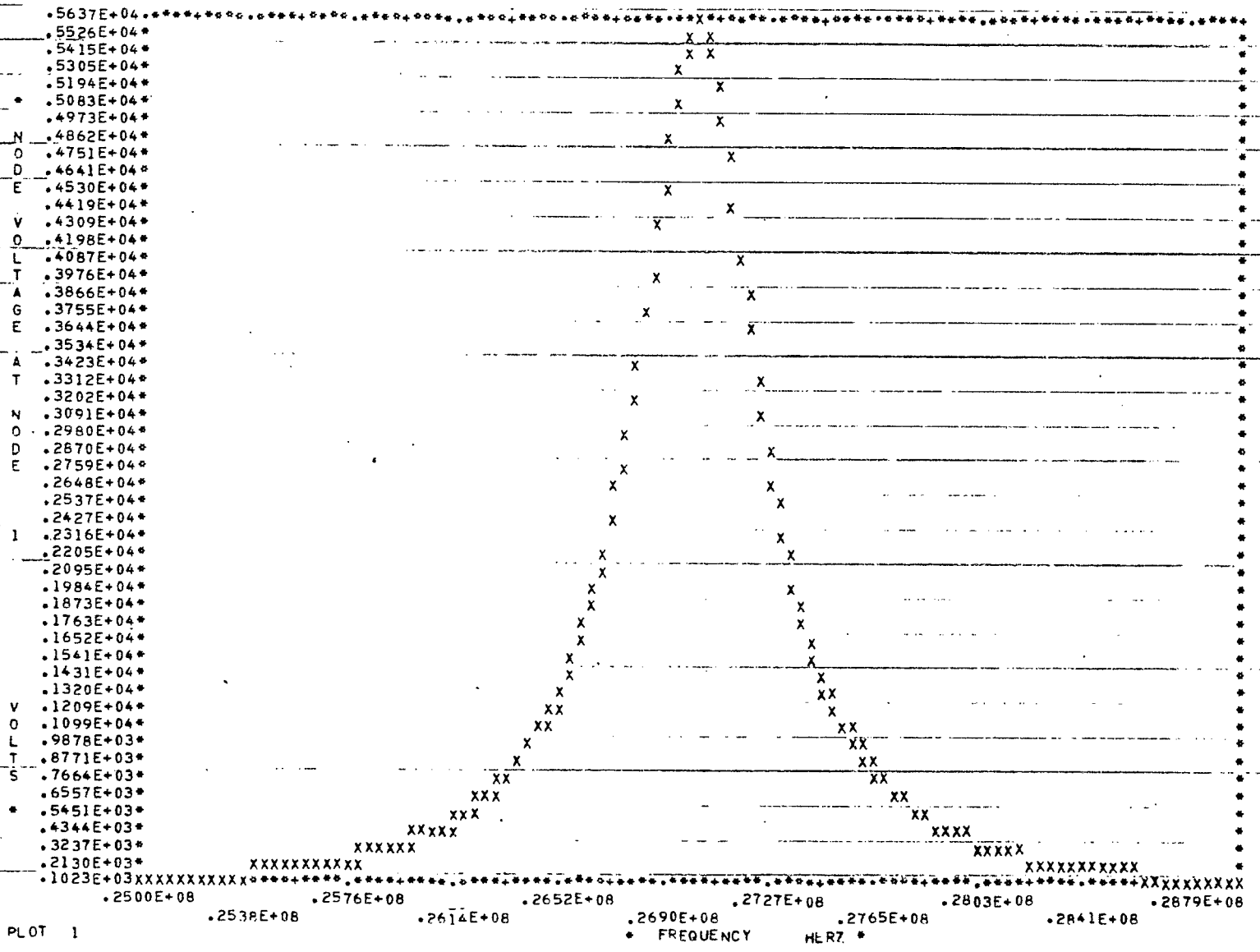

PLOT 1

ECAP. AC ANALYSIS 09/19/84 09.37.46. PAGE NO. 7

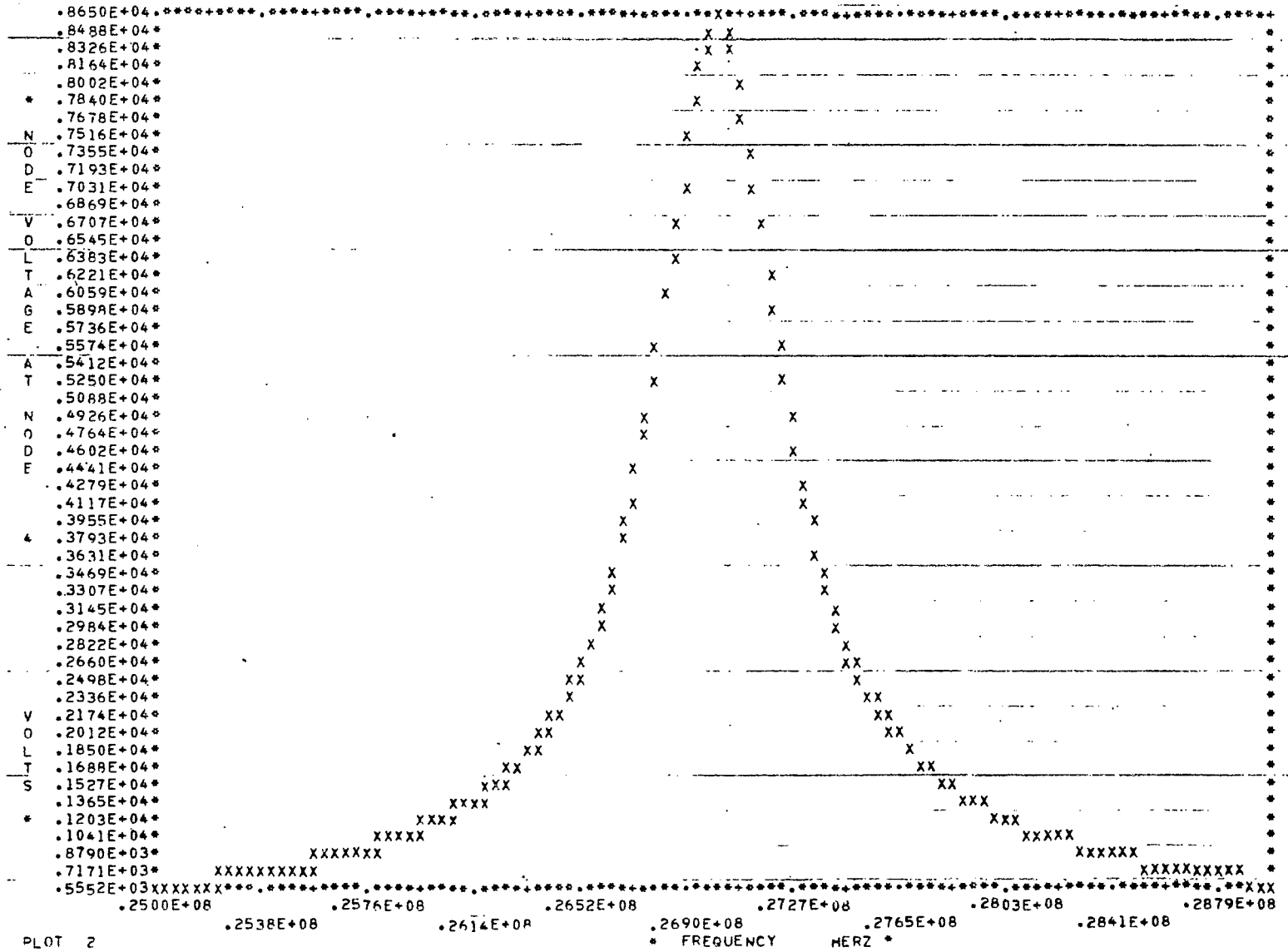

PLOT 2

ECAP. AC ANALYSIS 09/19/84 09.37.46. PAGE NO. 10

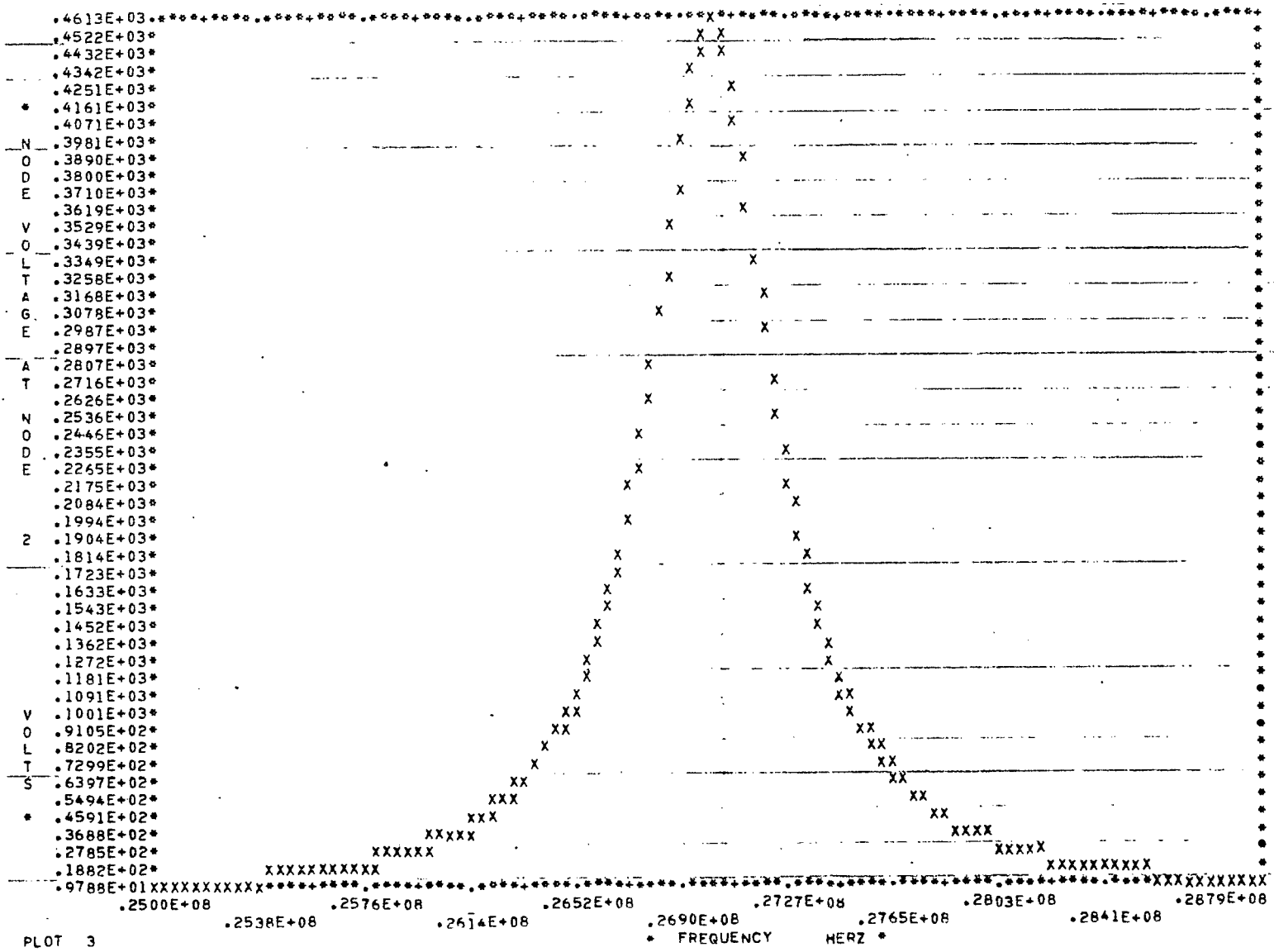

PLOT 3

```
 1.          AC ANALYSIS
 2.  B1      N(1,0),R=400.
 3.  B2      N(1,0),C=0.40E-10
 4.  B3      N(1,0),R=700.
 5.  B4      N(1,0),L=0.35768E-6
 6.  B5      N(1,2),C=40.E-12
 7.  B6      N(1,3),C=40.E-12
 8.  B7      N(2,0),C=0.1E-9
 9.  B8      N(3,0),C=0.1E-9
10.  B9      N(2,0),R=0.1E4
11.  B10     N(3,0),R=0.1E4
12.  B11     N(2,3),L=0.49638E-6
13.  B12     N(4,0),C=0.70E-10
14.  B13     N(4,0),L=0.49638E-6
15.  B14     N(4,0),R=1.E6
16.  B15     N(1,0),R=1.E6,I=1.
17.  M1      B(13,11),L=0.1E-7
18.  T1      B(9,1),GM=0.05
19.          FREQUENCY=27.E6
20.          EXECUTE

NO FATAL INPUT ERRORS DETECTED.  EXECUTION INITIATED.
```

FINAL AMPLIFIER EQ. MODEL
FOR AC. ECAP ANALYSIS

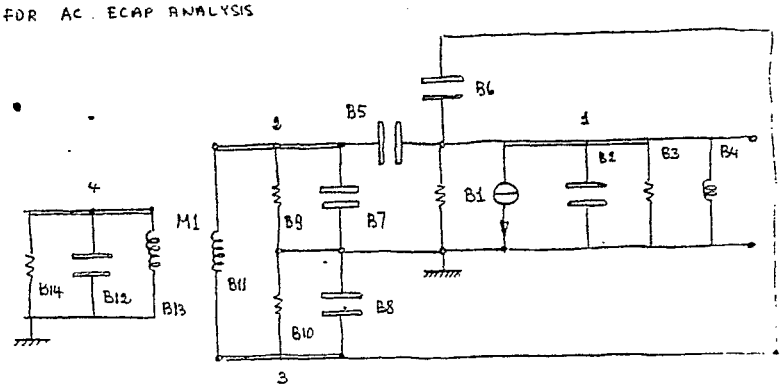

M1 B(13,11), L = 0.1 E-7 B1 N(1,0), R = 400.

T1 B(9,1), GM = 0.05

B15 N(1,0), R = 1.E6, I = 1. IS USED ONLY FOR MEASURING THE OUTPUT IMPEDANCE.

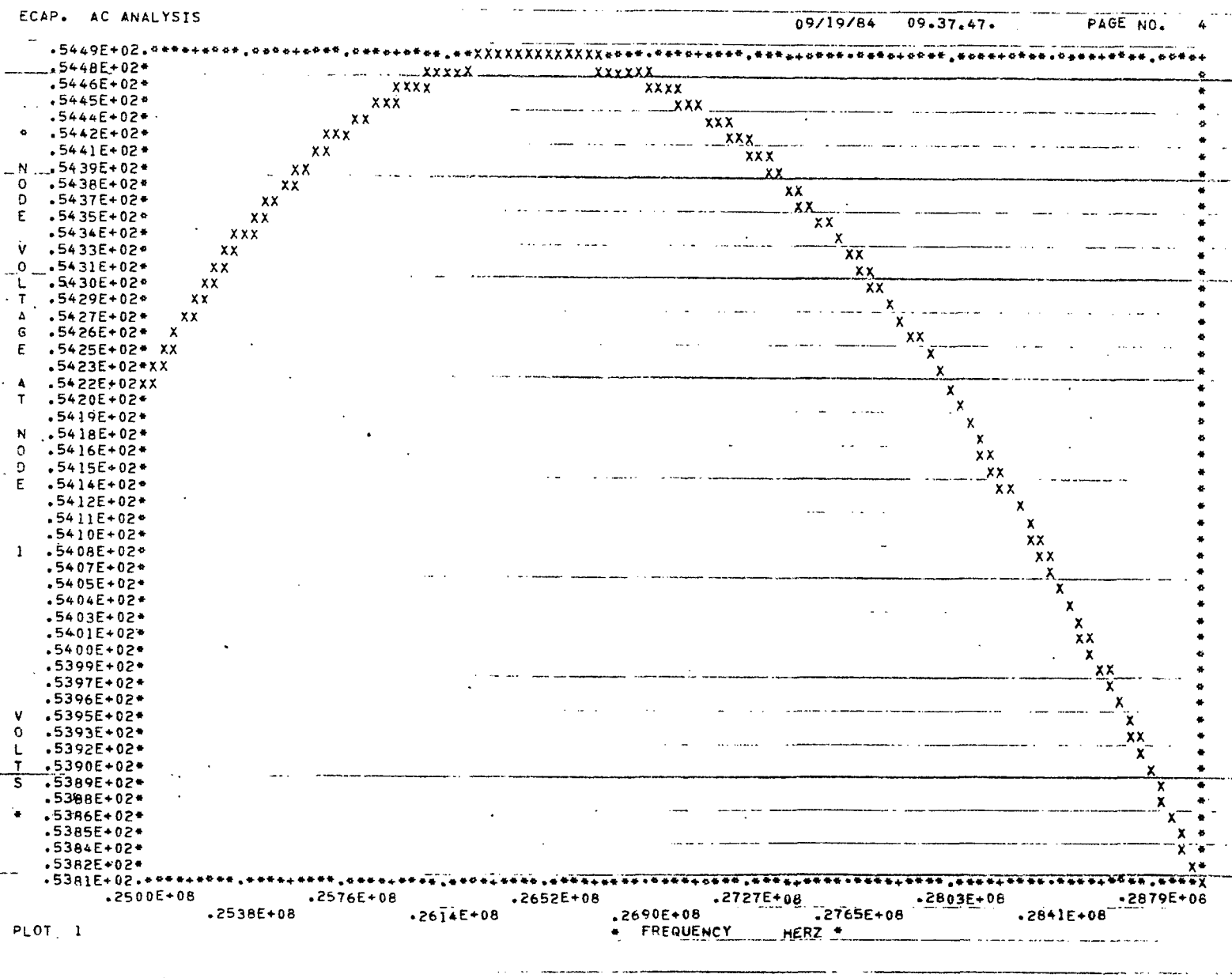
ECAP. AC ANALYSIS
09/19/84 09.37.47.
PAGE NO. 4
NODE VOLTAGE
.5449E+02
.5448E+02
.5446E+02
.5445E+02
.5444E+02
.5442E+02
.5441E+02
.5439E+02
.5438E+02
.5437E+02
.5435E+02
.5434E+02
.5433E+02
.5431E+02
.5430E+02
.5429E+02
.5427E+02
.5426E+02
.5425E+02
.5423E+02
.5422E+02
.5420E+02
.5419E+02
.5418E+02
.5416E+02
.5415E+02
.5414E+02
.5412E+02
.5411E+02
.5410E+02
.5408E+02
.5407E+02
.5405E+02
.5404E+02
.5403E+02
.5401E+02
.5400E+02
.5399E+02
.5397E+02
.5396E+02
.5395E+02
.5393E+02
.5392E+02
.5390E+02
.5389E+02
.5388E+02
.5386E+02
.5385E+02
.5384E+02
.5382E+02
.5381E+02
.2500E+08
.2538E+08
.2576E+08
.2614E+08
.2652E+08
.2690E+08
.2727E+08
.2765E+08
.2803E+08
.2841E+08
.2879E+08
FREQUENCY HERZ
PLOT 1