AD/RHIC–78

R H I C P R O J E C T

Brookhaven National Laboratory
Associated Universities, Inc.
Upton, NY 11973

Tensile Tests for Quality Control of Injection Molded Composite Posts

Lawrence J. Wolf

August 1990

TENSILE TESTS FOR QUALITY CONTROL OF INJECTION MOLDED COMPOSITE POSTS

Lawrence J. Wolf

8/8/90

Conclusions

1. Tensile tests of injection molded composite (IMC) post sections, using data from room temperature and helium temperature coupon tests is a workable means of quality control.

2. Ultem 2100 posts must be molded from pellets which have been preheated for 6 hours at 275°F. Those with this pretreatment can pass the quality test.

3. The as-cast Noryl posts, tested so far, have not met the quality standard. This is probably due to the flaws in the castings, since they fail at stresses well below the those of the coupon tests.

4. Knit lines cause flaws which weaken Ultem and Noryl castings. Molds for high performance structural parts like magnet posts apparently need to be free of knit lines, even if this means that holes must be drilled, at greater expense, rather than cored.

5. The reduction of the wall thickness with a carefully machined stress relief profile had the effect of strengthening Noryl castings to the point where they would pass the quality test.

6. A more sophisticated profile between the cylindrical shell and the flanges of the posts sections has the potential of further strengthening the IMC posts.

Background

All castings have flaws, though of different size and location. A process is needed to distinguish those with flaws which are serious enough to cause failure, from those having no flaws of consequence. The tensile test of a post section is a simple means of eliminating those with flaws that could seriously reduce the strength of the post. It is similar to the hydrotesting of a pressure vessel, which is required by the ASME Code, before putting a pressure vessel into service. A tensile force is easy to apply. It exposes the entire cylindrical shell to a uniform stress. And by using the philosophy of fracture mechanics, the tensile force can be contrived to take into consideration the decreased fracture toughness of the material at liquid helium temperature.

The tensile test of an IMC post section can be conducted in a fixture such as

shown in Figure 1. The post is inverted and placed in the fixture on the platen of the testing machine. The compression force, F, supplied by the testing machine causes a direct central tension force of the same level on the cylindrical shell. While the cylindrical shell of an IMC post supporting the cold mass of a magnet will rarely experience a direct central tensile force in the operation or construction of RHIC, this test is intended for all post sections which will be used in the production magnets. Good post sections will not fail under the specified test load. Those with serious flaws will be destroyed.

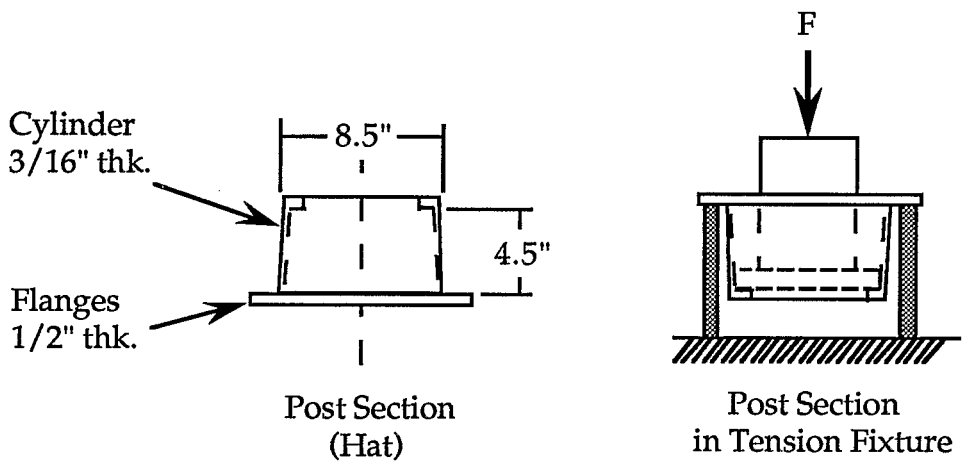

Figure 1
The quality control testing fixture.

Not shown in Figure 1, are the fixture flanges and the back-up rings. Both flanges of the IMC post section under test must be sandwiched between metal flanges. They must be carefully bolted, otherwise the flanges will rotate elastically and cause the relatively brittle post flange to crack due to the discontinuity stresses at the flange and cylinder junction.[1] The bolts on the inner flange were torqued to 30 foot-pounds, and those on the outer flange to 40. For production testing, some quick-acting flange clamping mechanism will need to be designed.

The level of load to be applied to the fixture, and thus to the post section to be tested, is determined from tensile tests on eight coupons cut from a good casting selected from the injection molded pieces. For production runs, three casting should be selected; one early, another at the middle, and a third at the end of the run. Serial numbers will be important.

Coupon Tests

The materials cast so far are Ultem® 2100 and SE1-GFN3 Noryl®. Ultem is a

[1] Timonshenko and Woinowski-Kreiger, *Theory of Plates and Shells*, McGraw Hill, N.Y.,N.Y., 1959, pp466-490

polyetherimide resin. The 2100 grade is reinforced with glass fibers about 3mm in length to make up 10% of its weight. Noryl is an alloyed resin. The SE1-GFN3 grade has glass fibers making up 30% of its weight. Both Ultem and Noryl are thermoplastic rather than thermosetting plastic materials. Developed by General Electric Company, they are marketed in sacks of pellets for injection molding.

To arrive at a quality control procedure, eight coupons were cut from the .188 inch thick cylindrical wall of a Noryl and an Ultem post section. They were milled flat, giving them a thickness of about .170 inches. Four specimens notched with a square edged slit saw, as shown in Figure 2, were prepared in in order to simulate a flaw. Four unnotched specimens, having the same stress width of .250 inches, were prepared as samples of the good material. Two each of the notched and the unnotched specimens were tested at room temperature and at liquid helium temperature. These resulting eight tensile tests constitute an inexpensive, albeit crude, application of fracture mechanics principles.

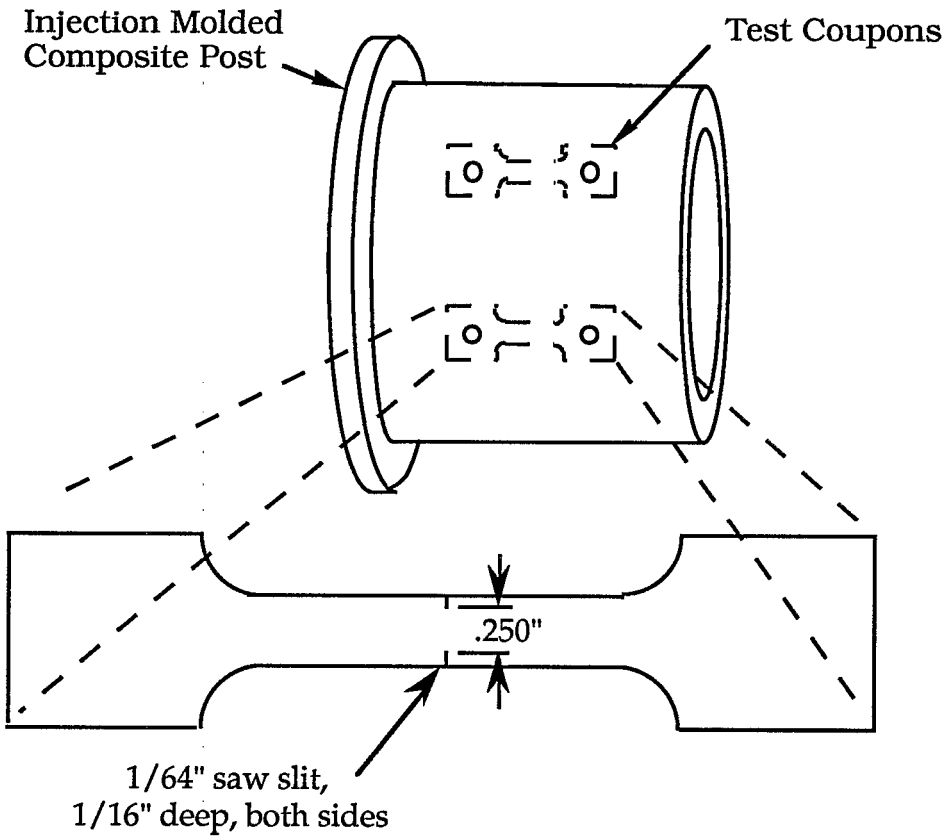

Figure 2
Test coupons cut from IMC post sections.

The results of the tensile tests on coupons, at room temperature and at liquid helium temperature, are given in Table 1. There were two batches of Ultem

castings. The earlier castings, U1 to U8, were made with material that had been baked for 4 hours at 250°F. These first eight were decidedly inferior because, as we learned later, Ultem pellets must be baked for six hours at 275°F to drive off moisture. Castings U9 through U24, had the proper pretreatment. The slight increase in time and temperature in the latter case produced a substantial increase in coupon test results. The proper pretreatment will need to be written in the specifications for future castings of Ultem.

Table 1
Ultimate Stresses From Test Coupons
(Psi.)

	σ_{UR} Unnotched, Room Temp.	σ_{NR} Notched, Room Temp.	σ_{UH} Unnotched, Helium Temp.	σ_{NH} Notched, Helium Temp.
Ultem 2100				
Ser#U1 to U8	12 400	8 000	15 600	5 200
Ser#U9 to U24	15 400	12 000	19 500	10 500
SE1-GFN3 Noryl				
Ser#N1 to N18	15 600	11 800	22 700	17 500

The coupon tests verified that both Ultem and Noryl, when unflawed, are stronger at liquid helium temperature than at room temperature. Both materials, expectedly, are weaker when notched due to the introduction of the high stress concentration. It is significant that both Ultem and Noryl have substantial strength at liquid helium temperature in spite of the sharp-edged notch. The stress values were fairly repeatable for the two specimens at each condition. The difference between the two materials is that Noryl is stronger at liquid helium temperature, whether or not it is notched. Ultem, on the other hand, is stronger at liquid helium temperatures when unnotched, but weaker when notched. Ultem can be expected to be less forgiving of flaws at cryogenic temperatures.

Quality Control Tensile Tests on Posts

The data from the coupon tests given in Table 1 can be used to determine the required quality control test force, F, in the following way:

$$F=\sigma_T x A;$$

where A is the post cross sectional area of 5 square inches, and σ_T is computed from:

$$\sigma_T = \sigma_C \left(\frac{\sigma_{UR}}{\sigma_{UH}} \right) \left(\frac{\sigma_{NR}}{\sigma_{NH}} \right)$$

The calculated stress, σ_C, from stress analysis, is multiplied by the ratio of the room-temperature ultimate strength over the helium-temperature ultimate stress, σ_{UR}/σ_{UH}. This factor has the effect of reducing the test load due to the fact that the material is stronger at low temperature.

The result is further multiplied by the ratio of the room temperature notch strength over the cold notch strength, σ_{NR}/σ_{NH}. This has the tendency of increasing the test load due to the fact that the material is normally more notch sensitive when cold. If less than one, as is the case here with Noryl, this ratio should be replaced with one.

The resulting test stress, σ_T, is then calculated using the above formula. σ_T could be either greater than or less than σ_C.

σ_C=7 000 psi., approximately, is the calculated maximum value of stress that the center post will experience under the worst case loading condition consisting of 3 000 pounds of cold mass weight and 12 500 pounds of hydrostatic end thrust.

The quality control force, F, obtained by multiplying the test stress, σ_T, by the cross sectional area of the post cylindrical shell (5 square inches) is given in Table 2 with the results of some quality control tests conducted upon selected test pieces.

Clearly, the first batch of Ultem posts, U1 through U8, could not pass the quality control test. Individuals form the second batch, U9 though U24, which were cast using pellets having the proper preheating, could pass the quality control test. None of the Noryl posts tested thus far would have been able to pass the quality control test except N16 and N17 which, counterintuitively, were machined thinner on a lathe as described in the last section of this paper. The tests of N16 and N17 are plotted in Figure 5.

Table 2
Tensile Tests
of IMC Post Sections

	Quality Control Force (Pounds)	Actual Failure Force (Pounds)
Ultem 2100		
Ser#U6	42 800	11 390
Ser#U7	42 800	12 800
Ser#U9*	31 600	36 900*
Ser#U10*	31 600	18 800**
Ser#U21	31 600	36 560
Ser#U24	31 600	36 150
SE1-GFN3 Noryl		
Ser#N1	24 000	13 150
Ser#N2	24 000	12 550
Ser#N3	24 000	13 460
Ser#N4	24 000	14 810
Ser#N16*	24 000	29 400*
Ser#N17*	24 000	28 700*
Ser#N19	24 000	15 190

* With machined stress relief profile as shown in Figure 4.
** Crack propagated from flaw in cylindrical shell.

Flaws

Even though the castings may have appeared perfect from the outside, flaws were found in all of the castings which were deliberately sectioned or broken during test. The overwhelming majority of the flaws were found in the 1/2-inch-thick flanges, which are the thick parts of the castings. Only rarely did the flaws occur in the thinner cylindrical shell.

The internal flaws took the form of voids, which look like "worm holes," or porosity which in some cases looked like foam comprising 30% of the flanges interior cross section. None of these flaws extended to the surface.

The voids are probably vacuum bubbles due to the shrinking of the material when cooling. The porosity is unlikely to be due to shrinkage, since in the last batch of Ultem porosity was found primarily beneath blisters, 1 to 2 cm in diameter, on the flange face at the knit lines. This suggests that entrained gas swells the flange about 1 mm as the still warm casting is stripped from the mold.

External flaws took the form of the above mentioned blisters, dimples, and cracks. Dimples of about .5 mm deep were found on both sides of almost all Noryl flanges. The dimples, most frequently occuring on a solid flange, may or may not cover a porous interior. Dimples were rare in Ultem. A couple of the Ultem pieces did contain cracks in the walls of the cylinder.

Knit Lines

Most of the flaws, including flange porosity and cracks, occurred at the *knit lines* of the casting. Knit lines form where masses of the injected material come back together after the flow has been separated as sketched in Figure 3. The flow is separated by hole cores or by having several different gates in the mold. The mold produced eight knit lines running down the cylindrical shell of each casting. Four were due to hole cores , and four were caused by flow coming together from different injection points. Due to the orientation of the glass fibers, the knit lines are clearly visible on the surface of the castings.

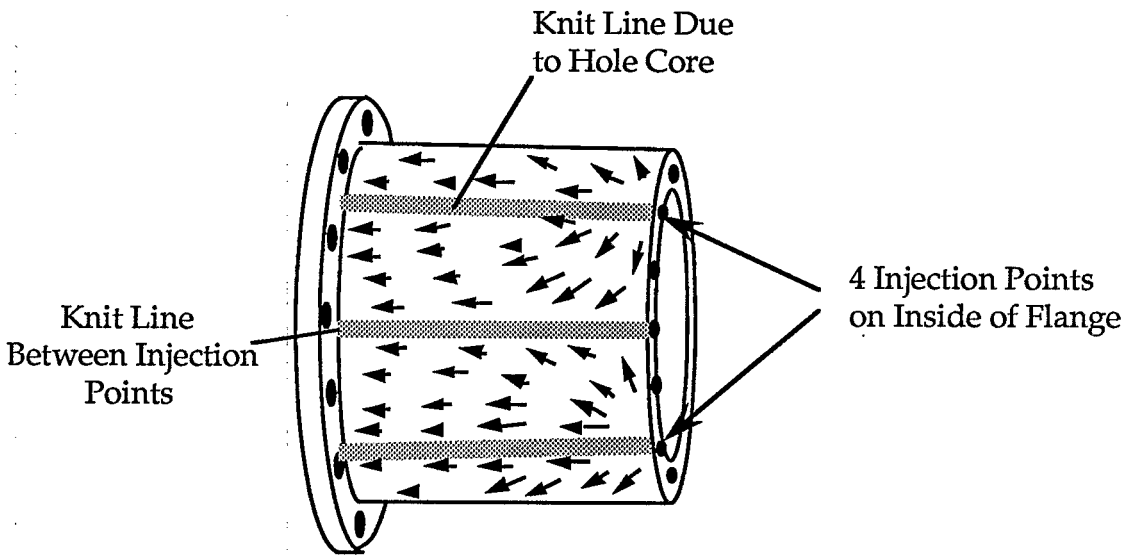

Figure 3
Knit lines produced by the mold flow.

After almost every tensile test, inspection revealed that the crack initiated at or near a knit line, at a point between the cylindrical shell and a flange. Since the typical internal flaw in the flange is also at a knit line, it was concluded that the knit lines are a significant weakening mechanism. The decision was made to change the mold to remove the hole cores and to replace the four injection gates with a single diaphragm gate feeding along the inner edge of the flange. In the new castings the holes will have to be drilled, but the post sections will be free of knit lines. Castings from the revised mold have not yet been received for testing.

Stress Relief Profile Studies

Since the tensile tests revealed that the castings were not delivering all the strength that the coupon tests indicate the material has to give, and that the weakness occurs at the corner radii; it was concluded that something might be gained from a more favorable shell profile near the flange. While the most obvious explanation for the weakness is the stress concentration due to the 1/8th inch corner radius, that is inadequate to account for the amount of weakening that exists. Other plausible explanations are that the flaws cause the flange to unevenly transmit stress through to the cylinder, or that the elastic rotation of the flange under load causes discontinuity stresses which propagate into the cylindrical shell. [2]

Two posts each of Ultem and of Noryl were machined as shown in Figure 5. The new profile has a large radius transitional hub which blends into the as-cast 1/8th-inch corner radius. In the new profile one-third of the material in the cylinder wall was machined away, reducing it from 3/16-inch in thickness to 1/8th of an inch. The hub extends back 3/4 inch from the flange.

The results of the stress relief profile were dramatic as shown in the graphs of Figures 5 and 6. In these figures, force is plotted against deflection for two of the newly profiled posts and for two of the original posts. Figure 5 depicts the results for Noryl and Figure 6 is for Ultem.

The removal of the material to form the stress relief profile actually strengthened the posts. The effect was most prominent in the case of Noryl where the profiled posts had approximately twice the load capacity as the original posts and three times the stress carrying capacity. In the case of Ultem, the effect was not as pronounced. One of the machined castings of Ultem, U10, was weakened by a flaw in the cylindrical shell and should be discounted. The other had only a slightly higher load capacity than its unmachined counterparts. But, because its wall thickness is two-thirds that of the unmachined pieces, there was a 50% gain in stress carrying capacity.

It is an unexpected happening, when the removal of material, produces a stronger structure. Although counterintuitive, this does occasionally occur and is indicative of a need for some flexibility to better distribute the stress field. The fact that the force-deflection curves for the as-cast pieces, as typified by the N2 and N4 plots in Figure 5, are more wavy than those for the machined pieces, suggests that the posts were trying to adjust plastically to some nonuniformity, probably due to flaws. There is clearly something more at play than the reduction of a the stress concentration factor at the corner. Before experimenting further with profiles, the first thing to do is to improve the quality of the castings by removing the knit lines.

---

[2] Timoshenko, Op.Cit.

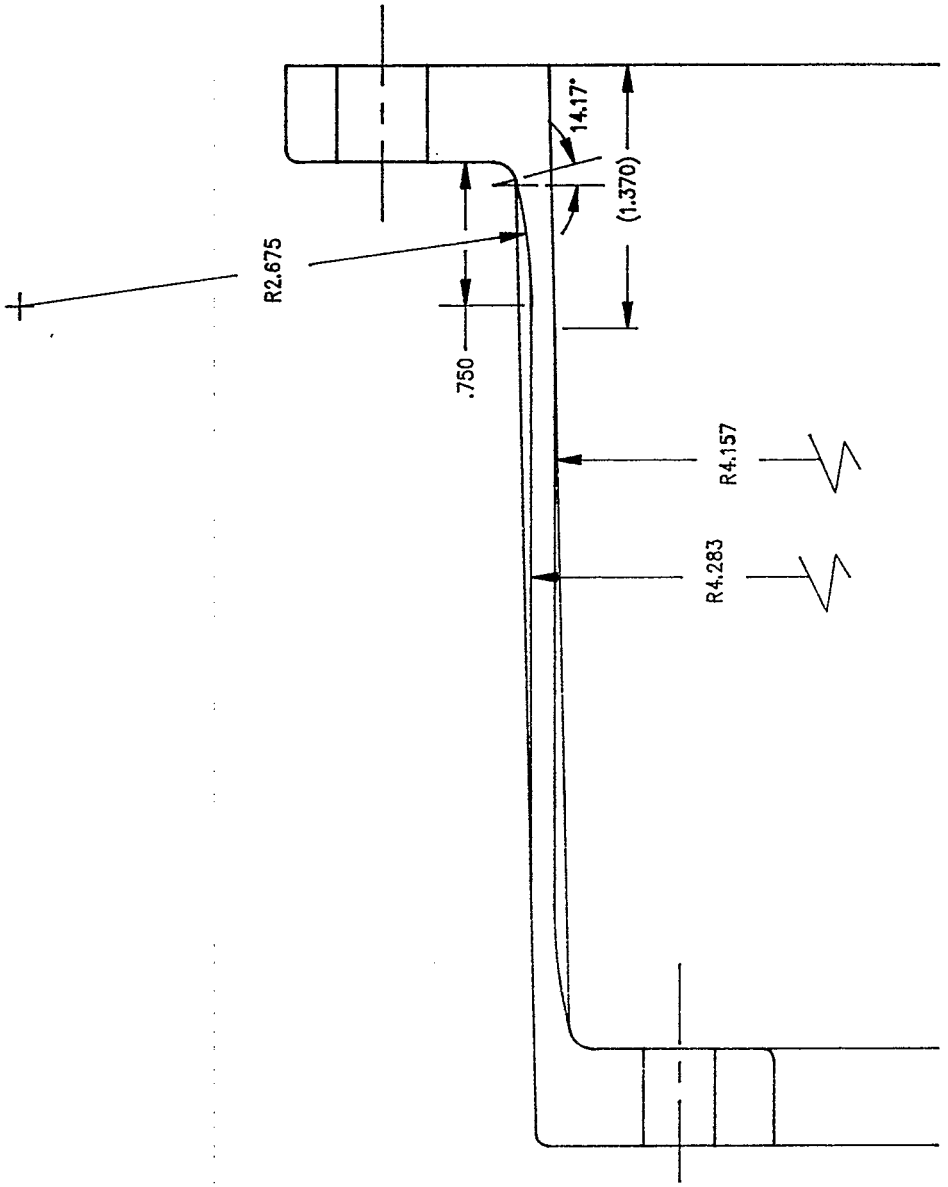

Figure 4
Dimensions of machined stress relief profile on castings N16, N17, U9 and U10.

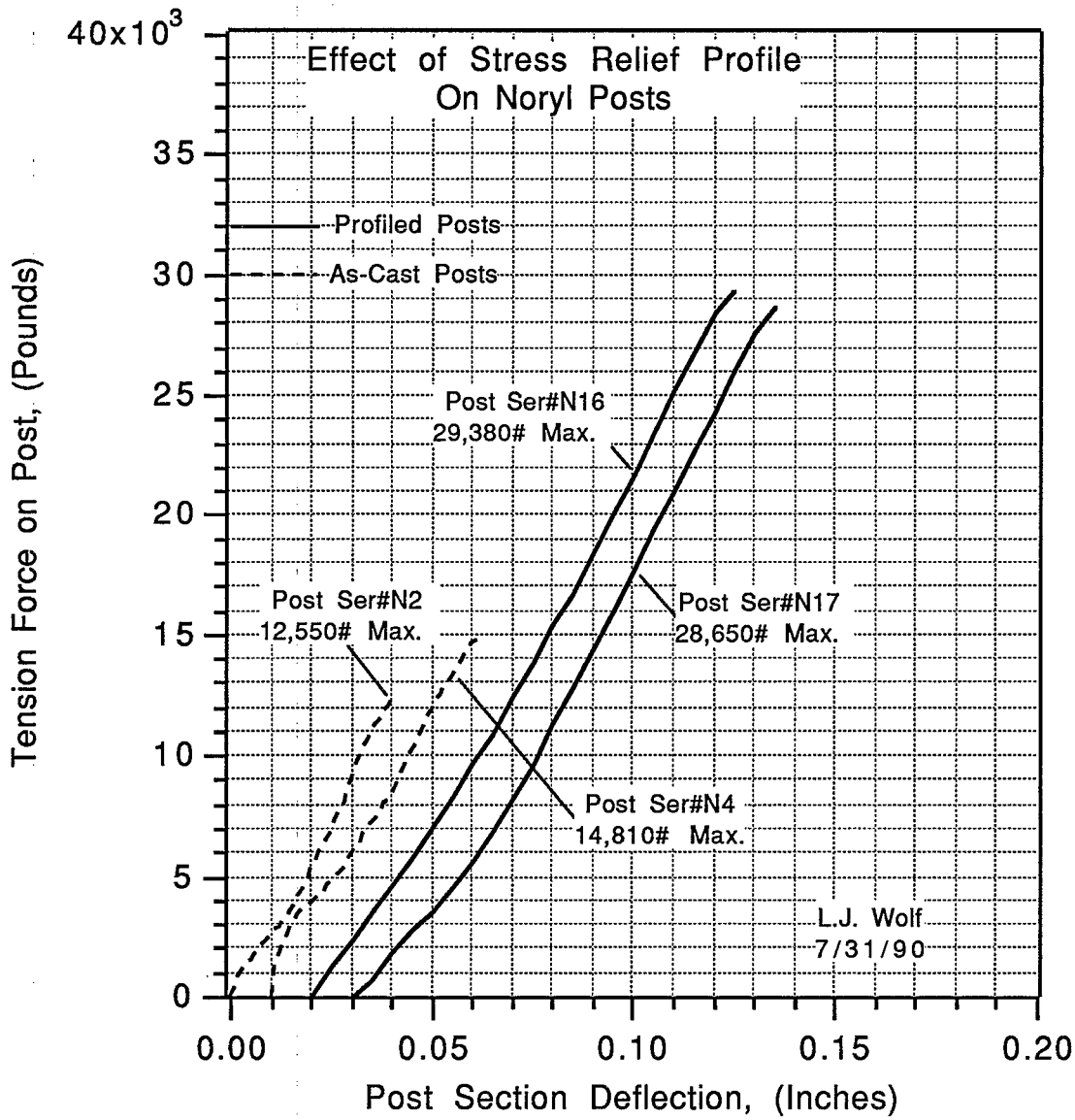
Effect of Stress Relief Profile
On Noryl Posts
Profiled Posts
As-Cast Posts
Post Ser#N16
29,380# Max.
Post Ser#N2
12,550# Max.
Post Ser#N17
28,650# Max.
Post Ser#N4
14,810# Max.
L.J. Wolf
7/31/90
40x10^3
35
30
25
20
15
10
5
0
0.00
0.05
0.10
0.15
0.20
Tension Force on Post, (Pounds)
Post Section Deflection, (Inches)

Figure 5

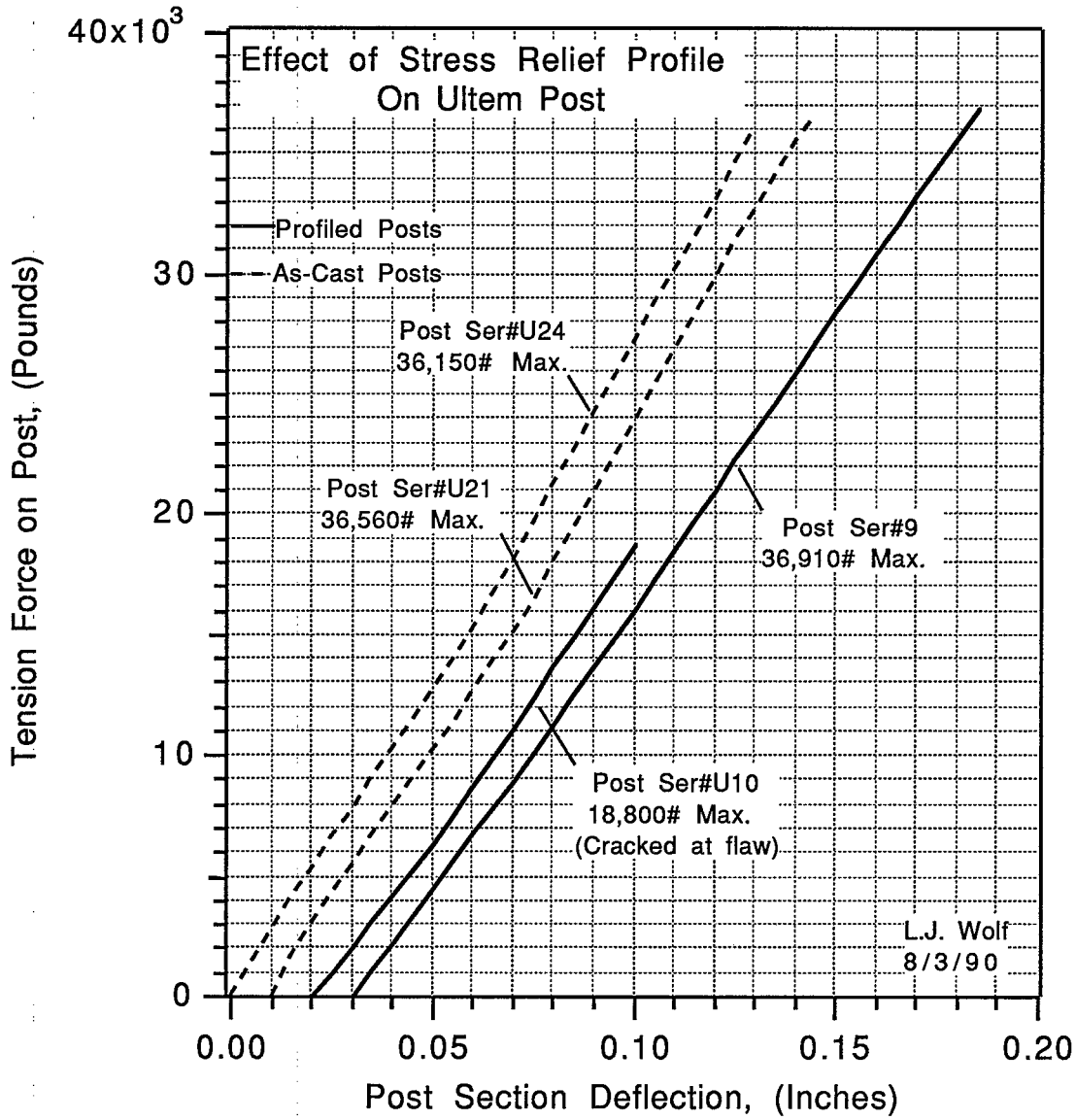
Effect of Stress Relief Profile
On Ultem Post
Profiled Posts
As-Cast Posts
Post Ser#U24
36,150# Max.
Post Ser#U21
36,560# Max.
Post Ser#9
36,910# Max.
Post Ser#U10
18,800# Max.
(Cracked at flaw)
L.J. Wolf
8/3/90
40x10^3
30
20
10
0
0.00
0.05
0.10
0.15
0.20
Tension Force on Post, (Pounds)
Post Section Deflection, (Inches)

Figure 6