REVISIONS							
REV	ZONE	ECN NO.	DESCRIPTION	BY	DATE	CKR	APP

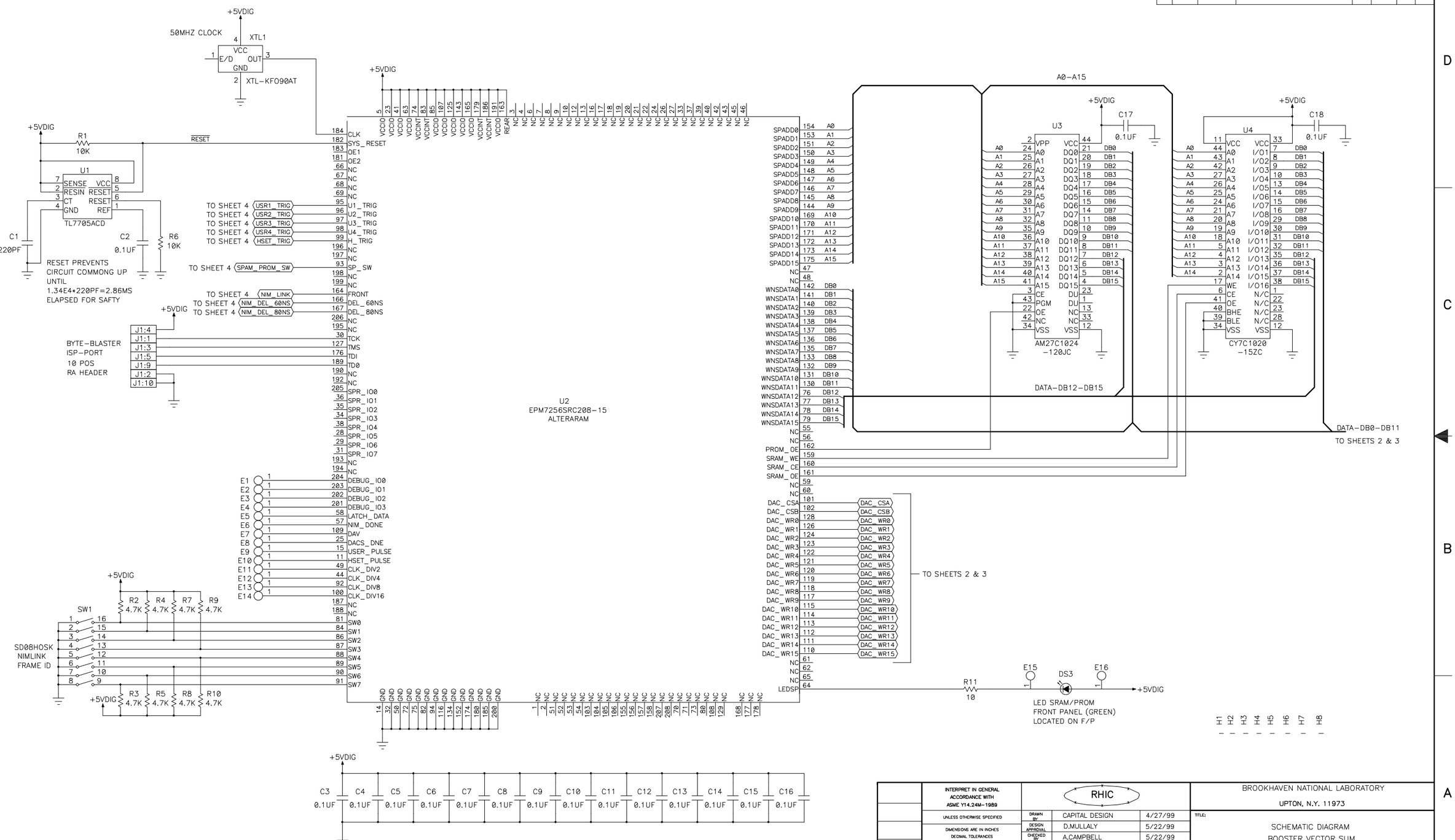

D36-E1497	NEXT ASSEMBLY	OUTSTANDING ECN	

INTERPRET IN GENERAL ACCORDANCE WITH ASME Y14.24M-1989

UNLESS OTHERWISE SPECIFIED

DIMENSIONS ARE IN INCHES
DECIMAL TOLERANCES
.X ± .030
.XX ± .015
.XXX ± .005
ANGULAR TOLERANCE ± 1°

NA FINISH — BREAK SHARP EDGES MAX. .03 MIN. .01

RHIC

DRAWN BY	CAPITAL DESIGN	4/27/99
DESIGN APPROVAL	D.MULLALY	5/22/99
CHECKED BY	A.CAMPBELL	5/22/99
ENGINEER APPROVAL	A.CAMPBELL	5/22/99
SUPERVISOR APPROVAL	M.BRENNAN	5/22/99
Q.A. APPROVAL		
C.E.T. APPROVAL		

BROOKHAVEN NATIONAL LABORATORY
UPTON, N.Y. 11973

TITLE: SCHEMATIC DIAGRAM BOOSTER VECTOR SUM

SIZE D — DRAWING NUMBER: D36-E1495 — REV. A

QA CATEGORY A-3 — SCALE: — WEIGHT — SHEET 1 OF 4

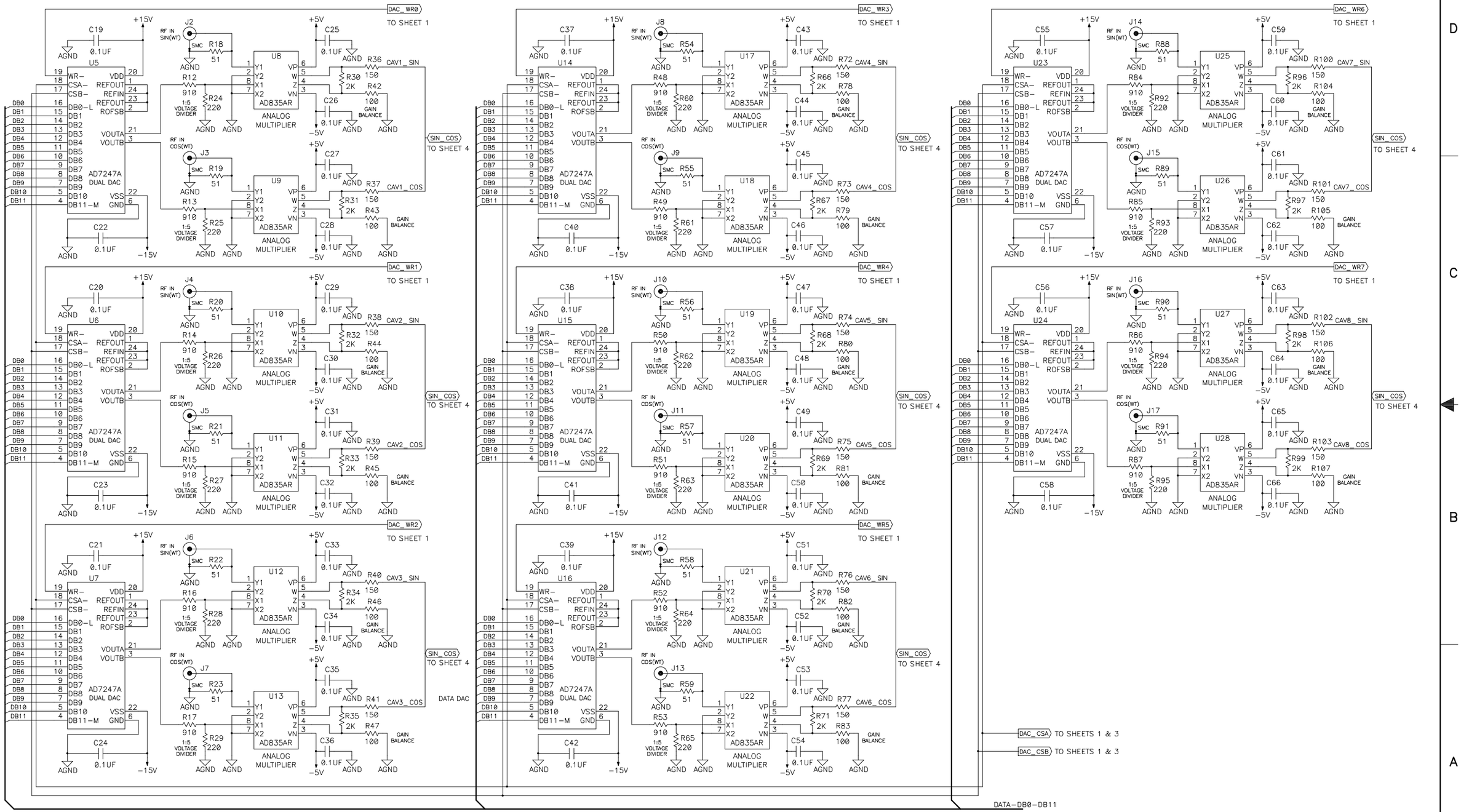
DAC_WR0
DAC_WR1
DAC_WR2
DAC_WR3
DAC_WR4
DAC_WR5
DAC_WR6
DAC_WR7
TO SHEET 1
SIN_COS
TO SHEET 4
DATA DAC
DAC_CSA TO SHEETS 1 & 3
DAC_CSB TO SHEETS 1 & 3
DATA-DB0-DB11
AD7247A DUAL DAC
AD835AR ANALOG MULTIPLIER
RF IN SIN(WT)
RF IN COS(WT)
1:5 VOLTAGE DIVIDER
GAIN BALANCE
CAV1_SIN
CAV1_COS
CAV2_SIN
CAV2_COS
CAV3_SIN
CAV3_COS
CAV4_SIN
CAV4_COS
CAV5_SIN
CAV5_COS
CAV6_SIN
CAV6_COS
CAV7_SIN
CAV7_COS
CAV8_SIN
CAV8_COS
+15V
-15V
+5V
-5V
AGND
0.1UF

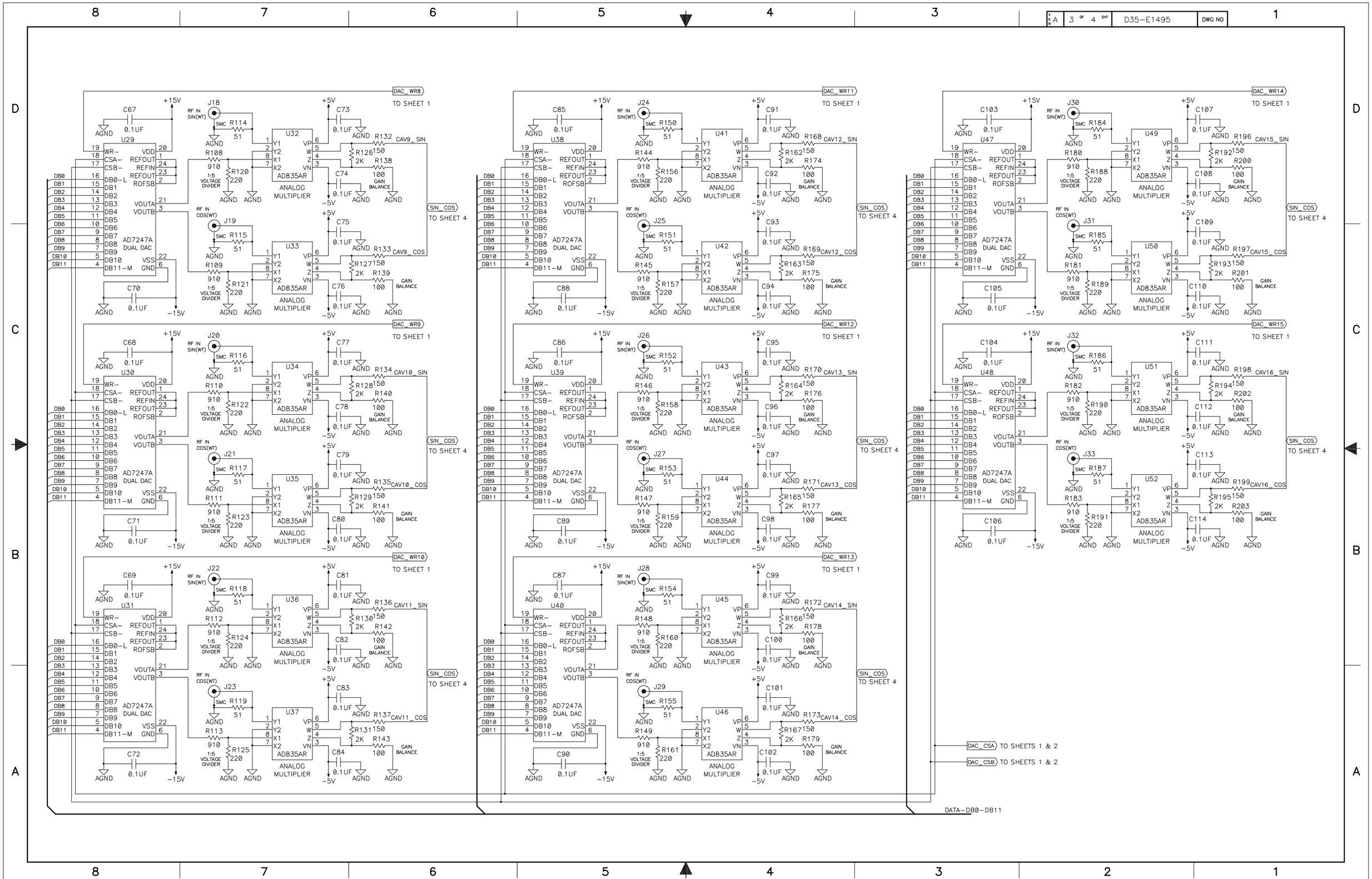

A
3 OF 4 SHT
D35-E1495
DWG NO
DAC_WR8
TO SHEET 1
DAC_WR9
TO SHEET 1
DAC_WR10
TO SHEET 1
DAC_WR11
TO SHEET 1
DAC_WR12
TO SHEET 1
DAC_WR13
TO SHEET 1
DAC_WR14
TO SHEET 1
DAC_WR15
TO SHEET 1
SIN_COS
TO SHEET 4
DAC_CSA
TO SHEETS 1 & 2
DAC_CSB
TO SHEETS 1 & 2
DATA-DB0-DB11
AD7247A
DUAL DAC
AD835AR
ANALOG
MULTIPLIER
1:5
VOLTAGE
DIVIDER
GAIN
BALANCE
RF IN
SIN(WT)
RF IN
COS(WT)
CAV9_SIN
CAV9_COS
CAV10_SIN
CAV10_COS
CAV11_SIN
CAV11_COS
CAV12_SIN
CAV12_COS
CAV13_SIN
CAV13_COS
CAV14_SIN
CAV14_COS
CAV15_SIN
CAV15_COS
CAV16_SIN
CAV16_COS
+15V
-15V
+5V
-5V
AGND

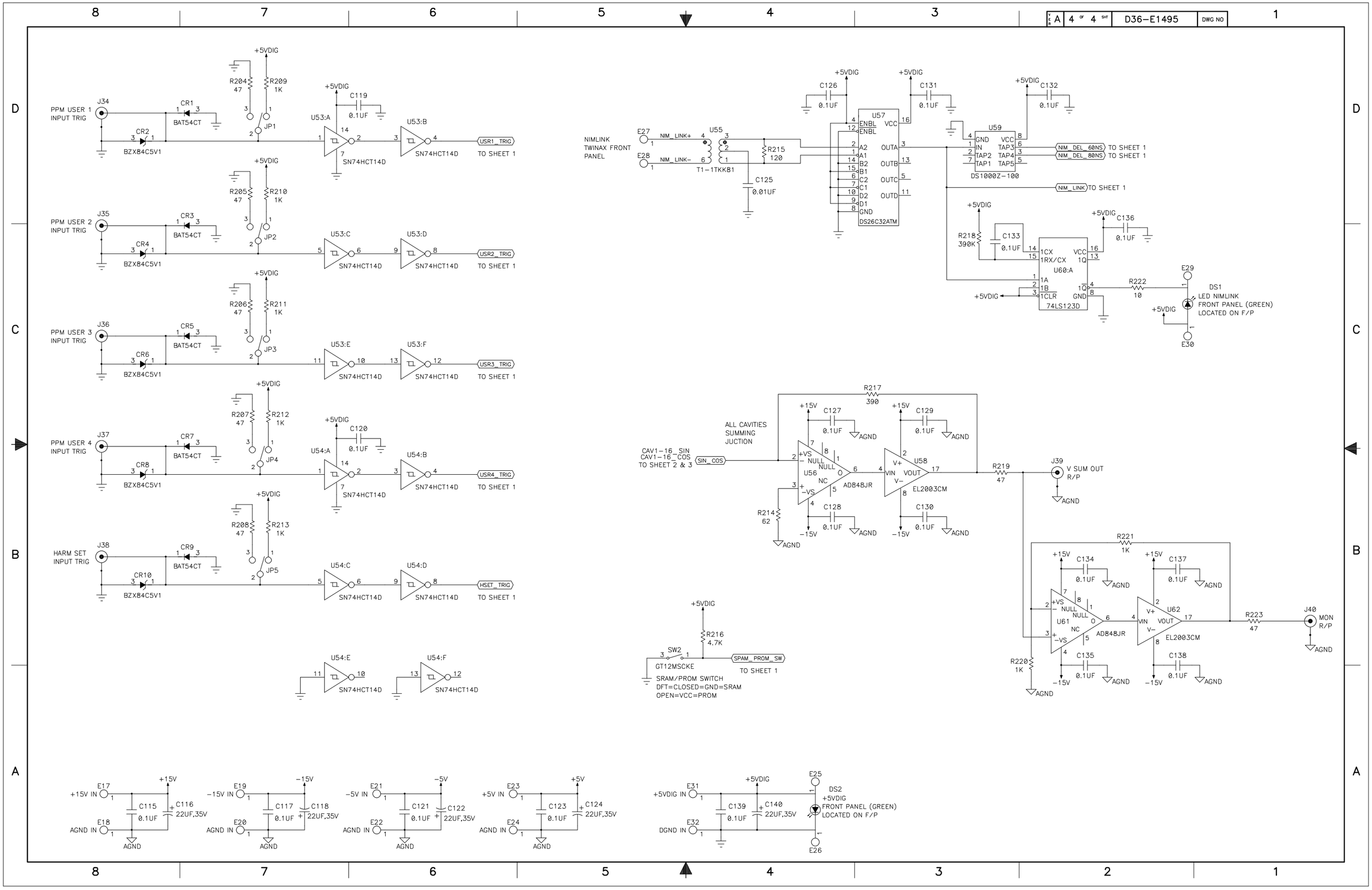
PPM USER 1 INPUT TRIG
J34
CR1
BAT54CT
CR2
BZX84C5V1
R204 47
R209 1K
JP1
+5VDIG
C119 0.1UF
U53:A
U53:B
SN74HCT14D
USR1_TRIG
TO SHEET 1
PPM USER 2 INPUT TRIG
J35
CR3
CR4
R205 47
R210 1K
JP2
U53:C
U53:D
USR2_TRIG
PPM USER 3 INPUT TRIG
J36
CR5
CR6
R206 47
R211 1K
JP3
U53:E
U53:F
USR3_TRIG
PPM USER 4 INPUT TRIG
J37
CR7
CR8
R207 47
R212 1K
JP4
C120 0.1UF
U54:A
U54:B
USR4_TRIG
HARM SET INPUT TRIG
J38
CR9
CR10
R208 47
R213 1K
JP5
U54:C
U54:D
HSET_TRIG
U54:E
U54:F
NIMLINK TWINAX FRONT PANEL
E27
E28
NIM_LINK+
NIM_LINK−
U55
T1−1TKK81
R215 120
C125 0.01UF
C126 0.1UF
C131 0.1UF
C132 0.1UF
U57
DS26C32ATM
U59
DS1000Z−100
NIM_DEL_60NS
NIM_DEL_80NS
NIM_LINK
R218 390K
C133 0.1UF
C136 0.1UF
U60:A
74LS123D
R222 10
E29
E30
DS1
LED NIMLINK FRONT PANEL (GREEN) LOCATED ON F/P
ALL CAVITIES SUMMING JUCTION
CAV1−16_SIN
CAV1−16_COS
TO SHEET 2 & 3
SIN_COS
R217 390
+15V
−15V
C127 0.1UF
C128 0.1UF
C129 0.1UF
C130 0.1UF
U56
AD848JR
U58
EL2003CM
R214 62
AGND
R219 47
J39
V SUM OUT R/P
R221 1K
C134 0.1UF
C135 0.1UF
C137 0.1UF
C138 0.1UF
U61
U62
R220 1K
R223 47
J40
MON R/P
R216 4.7K
SW2
GT12MSCKE
SPAM_PROM_SW
SRAM/PROM SWITCH
DFT=CLOSED=GND=SRAM
OPEN=VCC=PROM
E17
E18
+15V IN
AGND IN
C115 0.1UF
C116 22UF,35V
E19
E20
−15V IN
C117 0.1UF
C118 22UF,35V
E21
E22
−5V IN
C121 0.1UF
C122 22UF,35V
E23
E24
+5V IN
C123 0.1UF
C124 22UF,35V
E31
E32
+5VDIG IN
DGND IN
C139 0.1UF
C140 22UF,35V
E25
E26
DS2
+5VDIG
FRONT PANEL (GREEN) LOCATED ON F/P