REVISIONS							
REV	ZONE	ECN NO.	DESCRIPTION	BY	DATE	CKR	APP

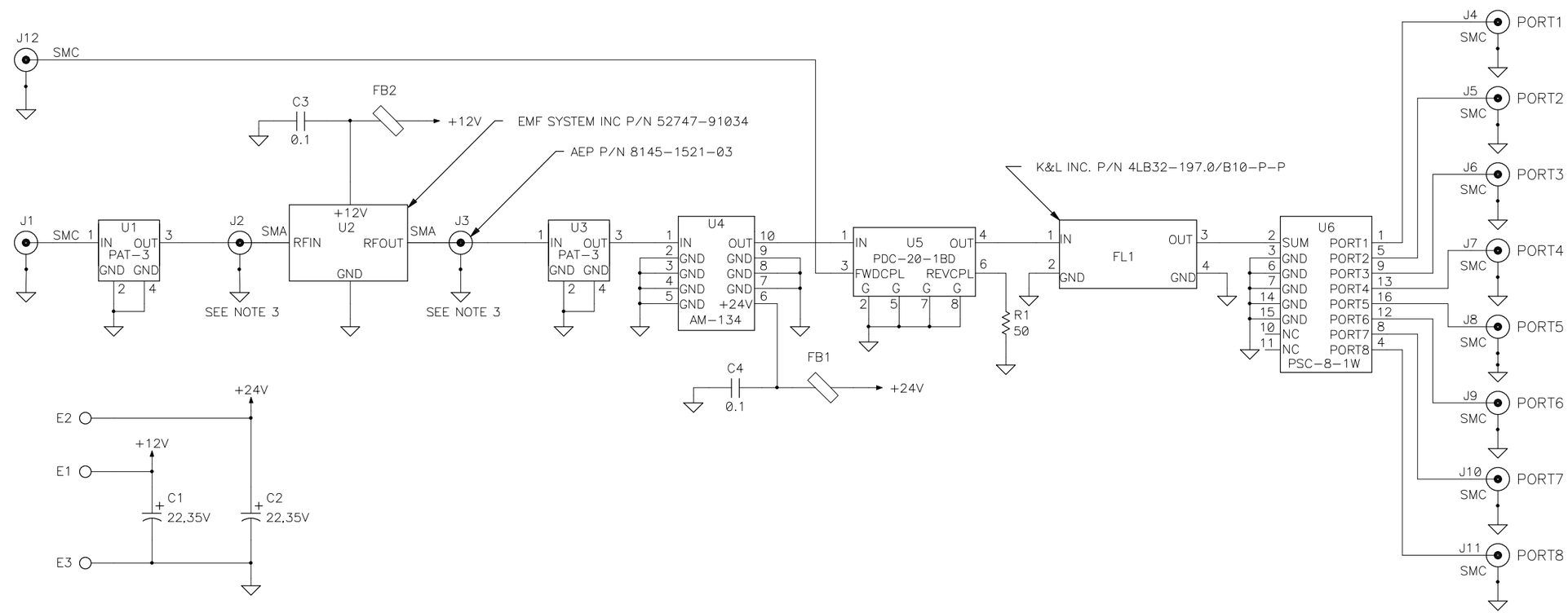

NOTES: UNLESS OTHERWISE SPECIFIED

1. ALL RESISTORS VALUE ARE IN OHMS, 1/8W, +/- 5%.
2. ALL CAPACITORS VALUE ARE IN MICRO FARADS, +/- 10%.
3. U2 MOUNTS TO THE P.C. BD WITH HARDWARE AND IS ELECTRICALLY CONNECTED TO P.C. BD FROM SMA ON COMPONENT TO RGT ANG CABLE TERMINATORS (J2 AND J3) ON THE BD. U2 RECIVES IT'S POWER (+12V AND GND) FROM TWO E-POINTS ON THE BD.

PJ 99-12

NEXT ASSEMBLY

OUTSTANDING ECN

INTERPRET IN GENERAL ACCORDANCE WITH ASME Y14.24M-1989

UNLESS OTHERWISE SPECIFIED

DIMENSIONS ARE IN INCHES
DECIMAL TOLERANCES
.X ± .030
.XX ± .015
.XXX ± .005
ANGULAR TOLERANCE ± 1°

NA FINISH

BREAK SHARP EDGES
MAX. .03 MIN. .01

RHIC

DRAWN BY	M.JACOBELLIS	2-22-99
DESIGN APPROVAL	D.MULLALY	2-22-99
CHECKED BY	JAMES ROSE	2-22-99
ENGINEER APPROVAL	JAMES ROSE	2-22-99
SUPERVISOR APPROVAL		
Q.A. APPROVAL		
C.E.E. APPROVAL		

BROOKHAVEN NATIONAL LABORATORY
UPTON, N.Y. 11973

TITLE:
SCHEMATIC DIAGRAM
STEP RECOVERY DIODE DISTRIBUTION

SIZE C
DRAWING NUMBER: RD75018113
REV. A
Q.A. CATEGORY: A-3
SCALE: ——
WEIGHT ——
SHEET 1 OF 1