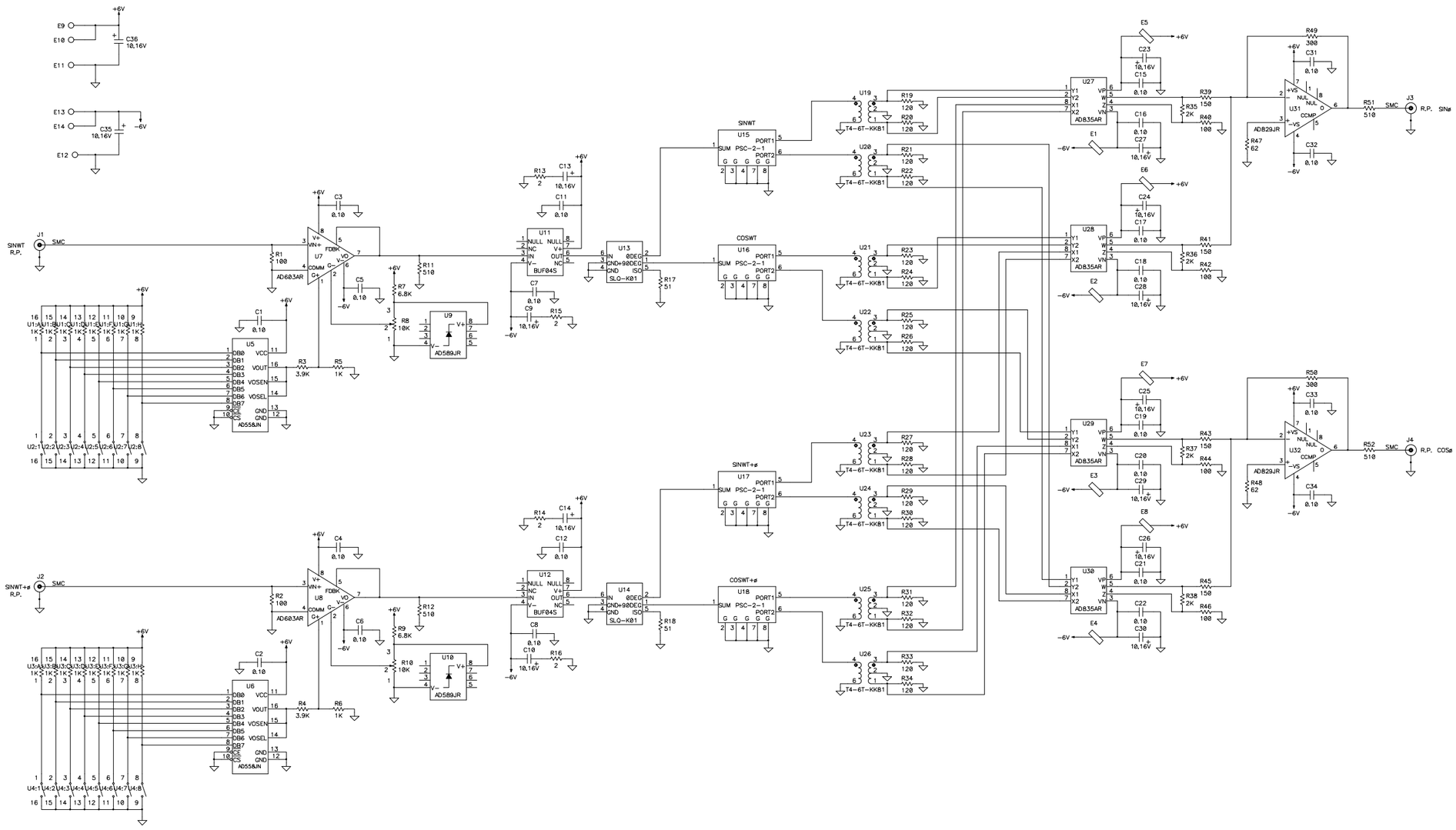

NOTES: UNLESS OTHERWISE SPECIFIED

1. ALL RESISTORS VALUE ARE IN OHMS, 1/8W, +/- 5%.
2. ALL CAPACITORS VALUE ARE IN MICRO FARADS, +/- 10%.

-3	-2	-1	REF.DESIGNATOR	ITEM NO.	DESCRIPTION	MATL.DWG NO.,BN4, NO.
QTY REQD						

OUTSTANDING ECN NUMBERS	INTERPRET IN GENERAL ACCORDANCE WITH ASME Y14.2-M-1989	RHIC	BROOKHAVEN NATIONAL LABORATORY ASSOCIATED UNIVERSITIES, INC UPTON, N.Y. 11973	
	UNLESS OTHERWISE SPECIFIED	DRAWN BY: M. JACOBELLIS 1-30-98	TITLE	
	DIMENSIONS ARE IN INCHES DECIMAL TOLERANCES .X ±.1 .XX ±.03 .XXX ±.005 ANGULAR TOLERANCE ±1°	DESIGN APPROVAL: D.MULLALY 2-23-98	SCHEMATIC DIAGRAM RHIC RF BEAM CONTROL SYSTEM PHASE DETECTOR	
		CHECKED BY: T.HAYES 2-23-98		
		ENGINEER APPROVAL: T.HAYES 2-23-98	SIZE E	DRAWING NUMBER: RD75018036 REV. A
	Q.A. NEXT ASSEMBLY	SUPERVISOR APPROVAL		
		Q.A. APPROVAL	SCALE ----- WEIGHT ----- SHEET 1 OF 1	

DWG NO. RD75018036 SHT 1 OF 1 A