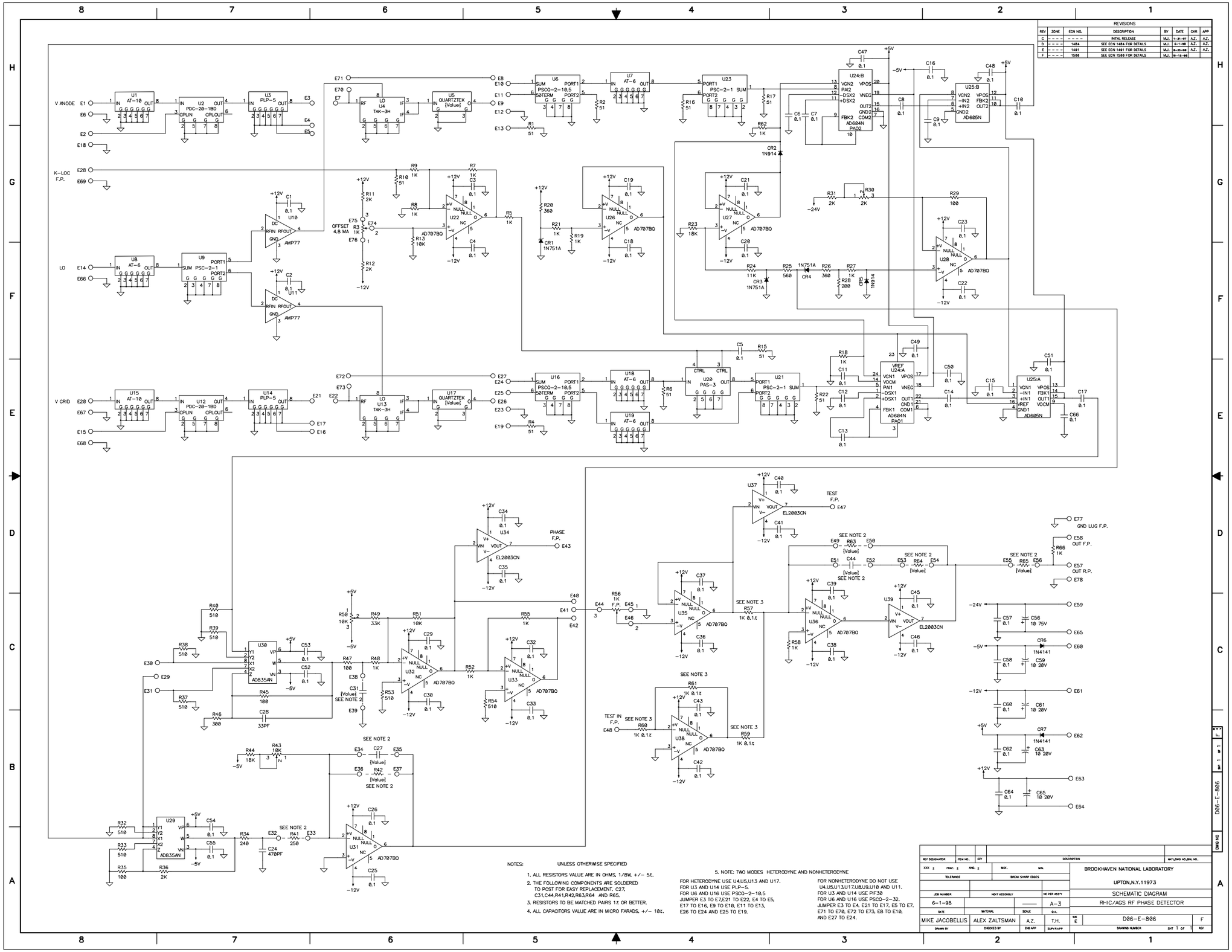

REVISIONS							
REV	ZONE	ECN NO.	DESCRIPTION	BY	DATE	CKR	APP
C	- - - -	- - - -	INITIAL RELEASE	M.J.	1-31-97	A.Z.	A.Z.
D	- - - -	1484	SEE ECN 1484 FOR DETAILS	M.J.	6-1-98	A.Z.	A.Z.
E	- - - -	1491	SEE ECN 1491 FOR DETAILS	M.J.	8-25-98	A.Z.	A.Z.
F	- - - -	1500	SEE ECN 1500 FOR DETAILS	M.J.	10-13-98		

NOTES: UNLESS OTHERWISE SPECIFIED

1. ALL RESISTORS VALUE ARE IN OHMS, 1/8W, +/- 5%.
2. THE FOLLOWING COMPONENTS ARE SOLDERED TO POST FOR EASY REPLACEMENT. C27, C31,C44,R41,R42,R63,R64 AND R65.
3. RESISTORS TO BE MATCHED PAIRS 1% OR BETTER.
4. ALL CAPACITORS VALUE ARE IN MICRO FARADS, +/- 10%.
5. NOTE: TWO MODES HETERODYNE AND NONHETERODYNE

FOR HETERODYNE USE U4,U5,U13 AND U17.
FOR U3 AND U14 USE PLP-5.
FOR U6 AND U16 USE PSCO-2-10.5
JUMPER E3 TO E7,E21 TO E22, E4 TO E5, E17 TO E16, E9 TO E10, E11 TO E13, E26 TO E24 AND E25 TO E19.

FOR NONHETERODYNE DO NOT USE U4,U5,U13,U17,U8,U9,U10 AND U11.
FOR U3 AND U14 USE PIF30
FOR U6 AND U16 USE PSCO-2-32.
JUMPER E3 TO E4, E21 TO E17, E5 TO E7, E71 TO E70, E72 TO E73, E8 TO E10, AND E27 TO E24.

REF DESIGNATOR	ITEM NO.	QTY	DESCRIPTION	MATL/DWG NO./BHL NO.
XXX ± FRAC. ± ANG. ±	MAX. MIN.		BROOKHAVEN NATIONAL LABORATORY	
TOLERANCE	BREAK SHARP EDGES		UPTON,N.Y.11973	
JOB NUMBER	NEXT ASSEMBLY	NO PER ASS'Y	SCHEMATIC DIAGRAM	
6-1-98		A-3	RHIC/AGS RF PHASE DETECTOR	
DATE	MATERIAL	SCALE	Q.A.	
MIKE JACOBELLIS	ALEX ZALTSMAN	A.Z.	T.H.	SIZE E D06-E-806 F
DRAWN BY	CHECKED BY	ENG APP	SUPV'R APP	DRAWING NUMBER SHT 1 OF 1 REV

DWG NO D06-E-806 SHT 1 OF 1 F