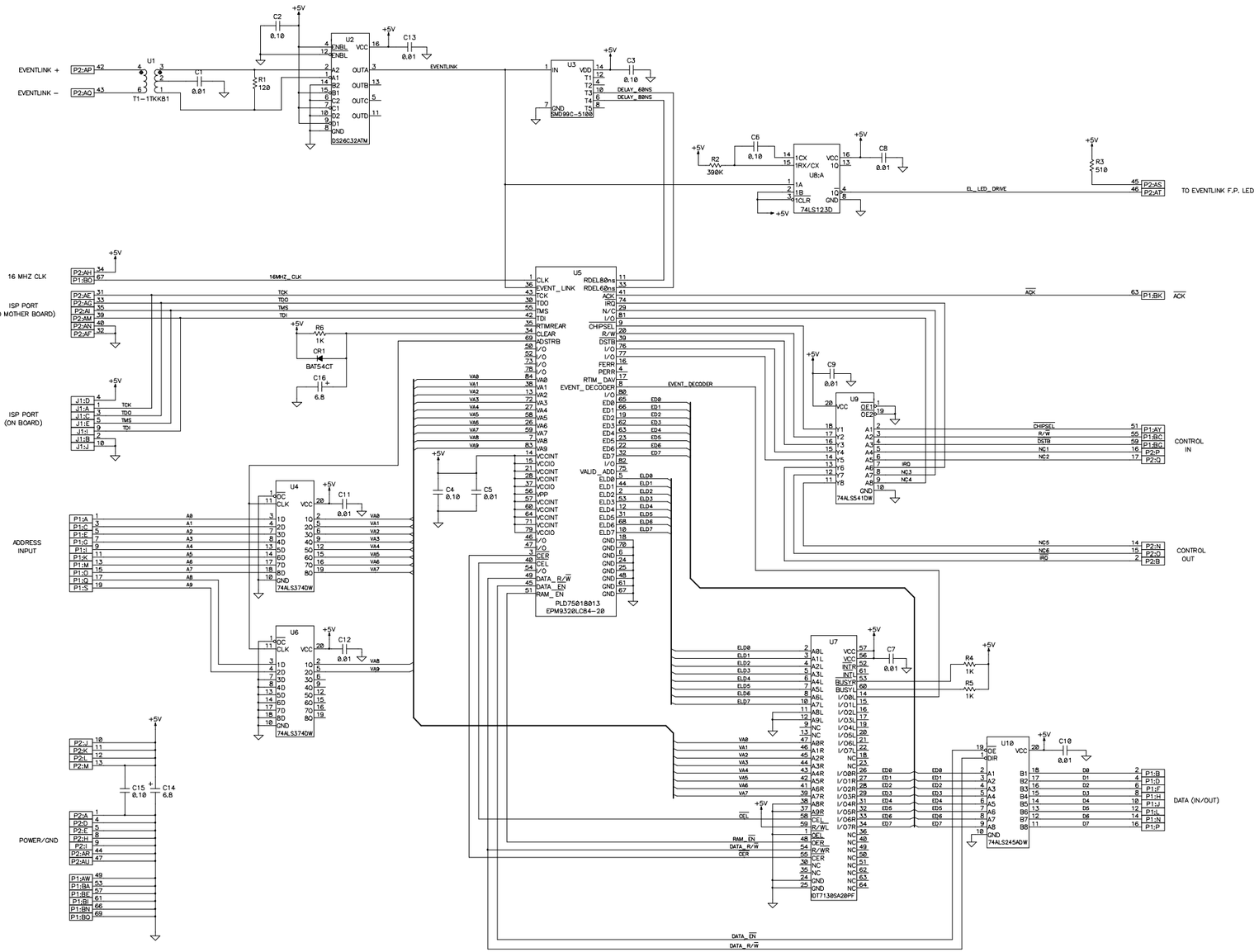

NOTES: UNLESS OTHERWISE SPECIFIED

1. ALL RESISTORS VALUES ARE IN OHMS, 1/8W, +/– 5% .
2. ALL CAPACITORS VALUES ARE IN MICRFARADS, +/–.10%.

REVISIONS							
REV	ZONE	ECN NO.	DESCRIPTION	BY	DATE	CKR	APP

QTY REQD	REF.DESIGNATOR	ITEM NO.	DESCRIPTION	MATL.DWG NO.,BINL NO.

OUTSTANDING ECN NUMBERS

INTERPRET IN GENERAL ACCORDANCE WITH ASME Y14.24M-1989

UNLESS OTHERWISE SPECIFIED: DIMENSIONS ARE IN INCHES; DECIMAL TOLERANCES .X ±.06, .XX ±.02, .XXX ±.005; ANGULAR TOLERANCE ±1°

Q.A. A–3

NEXT ASSEMBLY 75018008

RHIC

DRAWN BY	M.JACOBELLIS	11-14-97
DESIGN APPROVAL	DAN MULLALY	12-5-97
CHECKED BY	KURT VETTER	12-5-97
ENGINEER APPROVAL	KURT VETTER	12-5-97
SUPERVISOR APPROVAL	TOM HAYES	12-8-97
Q.A. APPROVAL	D PASSARELLO	12-10-97

BROOKHAVEN NATIONAL LABORATORY
ASSOCIATED UNIVERSITIES, INC.
UPTON, N.Y. 11973

TITLE: SCHEMATIC DIAGRAM
EVENTLINK TO VSB INTERFACE

SIZE E | DRAWING NUMBER 75018006 | REV A

SCALE: | WEIGHT | SHEET 1 OF 1

DWG NO 75018006 | SH 1 OF 1 | A