| REV | ZONE | DESCRIPTION | BY | DATE | CKR | APP |
|---|---|---|---|---|---|---|
| B | | SEE ECN NO. 1876 | TT | 4/12/95 | RC | RC |
| C | | SEE ECN NO. 1258 | TT | 11/28/96 | | |

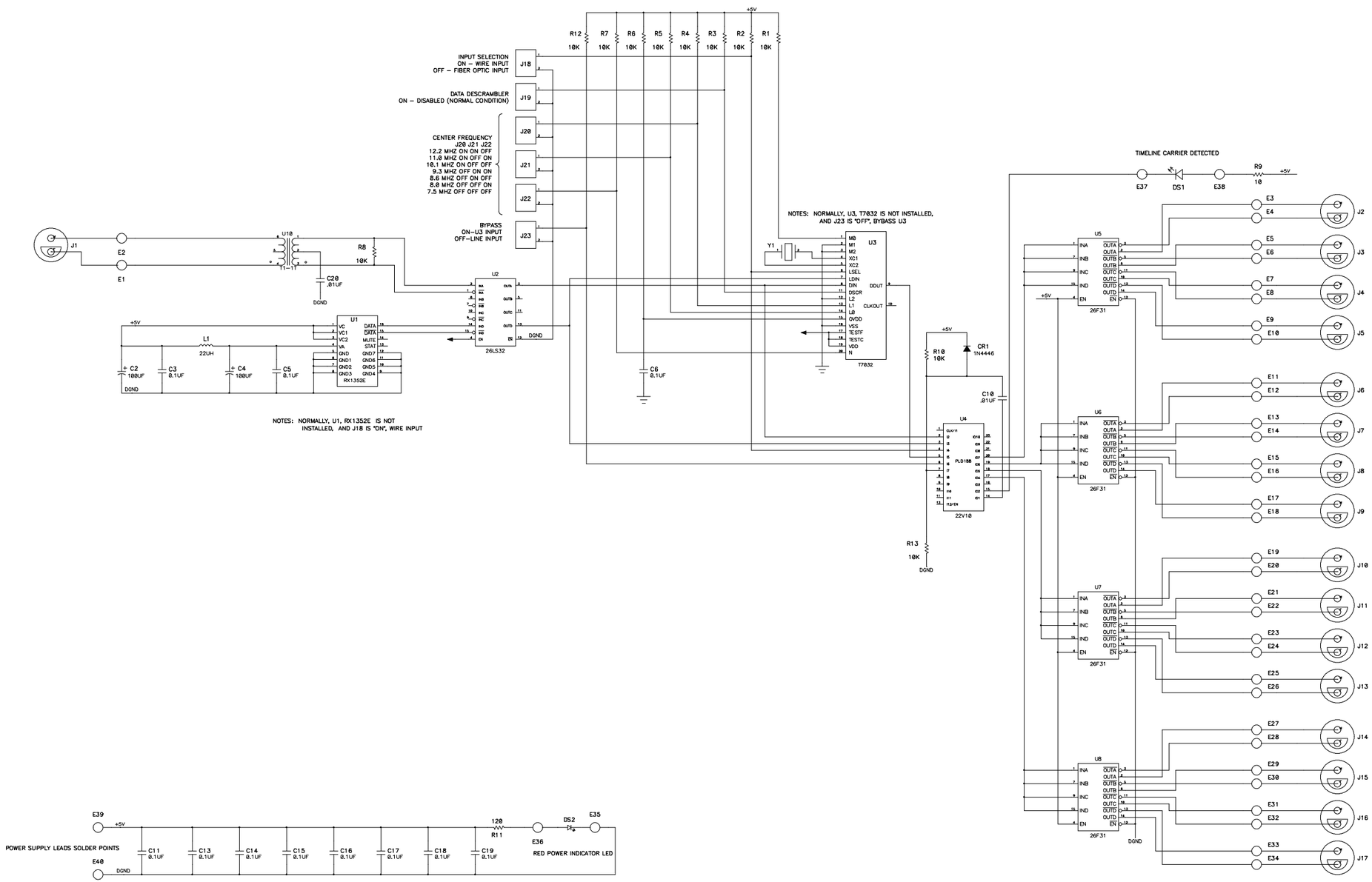





NOTES: UNLESS OTHERWISE SPECIFIED
1.ALL RESISTOR VALUES ARE IN OHMS,1/4W,.+/–2%.

| REF DESIGNATOR | ITEM NO | QTY | DESCRIPTION | WITL/DWG NO.,REV. NO. |
|---|---|---|---|---|

| | | | |
|---|---|---|---|
| XXX ± FRAC ± ANG ± | MAX MIN | | BROOKHAVEN NATIONAL LABORATORY |
| TOLERANCE | BREAK SHARP EDGES | | ASSOCIATED UNIVERSITIES,INC. UPTON,N.Y.11973 |
| | D09–E2441–5 | | |
| JOB NUMBER | NEXT ASSEMBLY | NO PER ASS'Y | SCHEMATIC DIAGRAM |
| 10–13–94 | —— | A–3 | FANOUT ASSEMBLY |
| DATE | MATERIAL | SCALE | D.L. |
| T.TANZA | C.CONKLING | CRC | BRO |
| DRAWN BY | CHECKED BY | ENG APP | SUPVR.APP |
| D09–E2436 –5 | C | | |
| DRAWING NUMBER | REV | | |