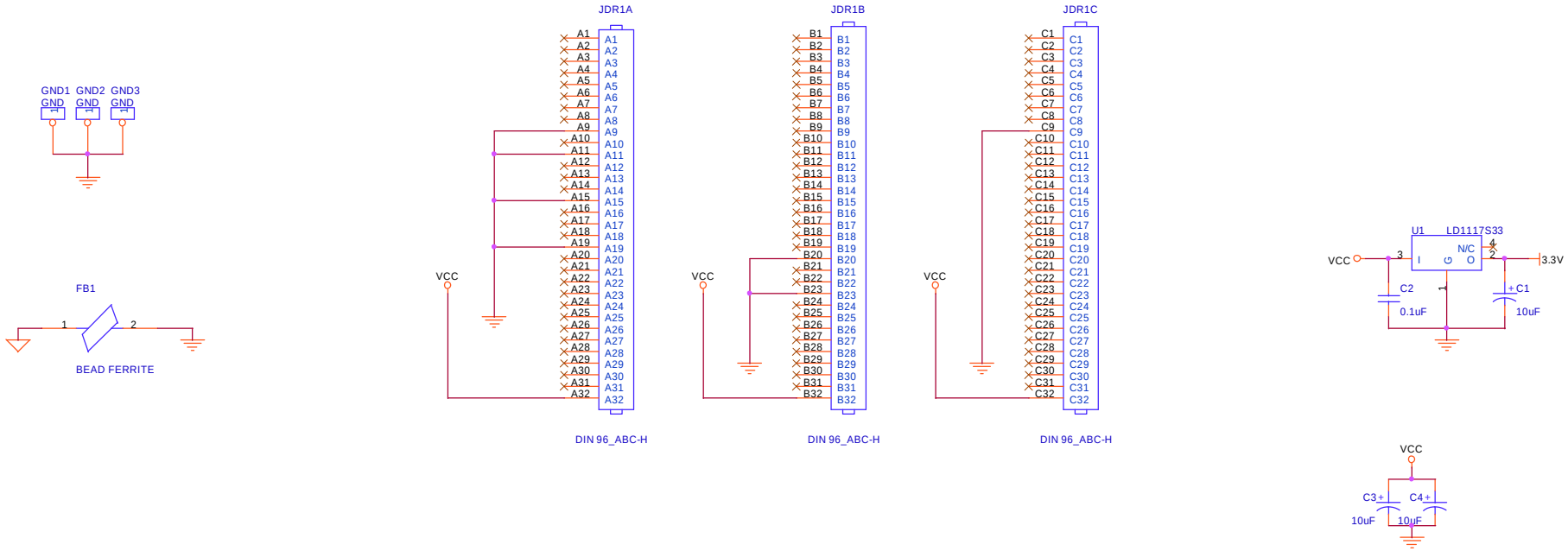

APOGEE LABS INC.

210 SOUTH THIRD STREET, NORTH WALES PA 19044 [PHONE:1-215-699-2060]

Title	BNL-PSI		
Size B	Document Number SHPC-029	Date Tuesday, April 17, 2001	Rev B
Engineer Kevin Krasinski		Sheet 1 of 11	
		Page Name VME A BUS	

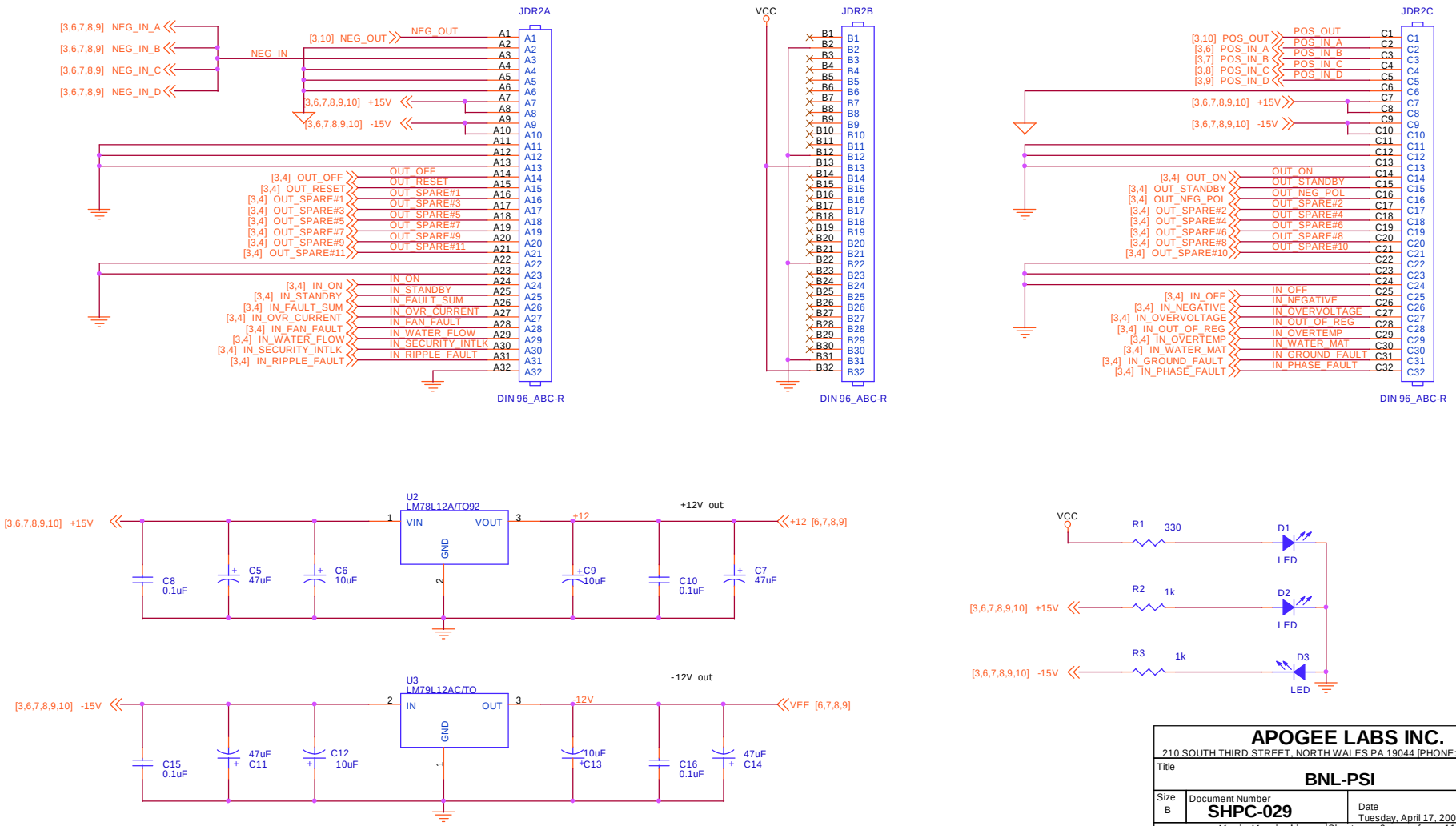

APOGEE LABS INC.

210 SOUTH THIRD STREET, NORTH WALES PA 19044 [PHONE:1-215-699-2060]

Title	BNL-PSI		
Size B	Document Number SHPC-029	Date Tuesday, April 17, 2001	Rev B
Engineer Kevin Krasinski		Sheet 2 of 11	
		Page Name VME B BUS	

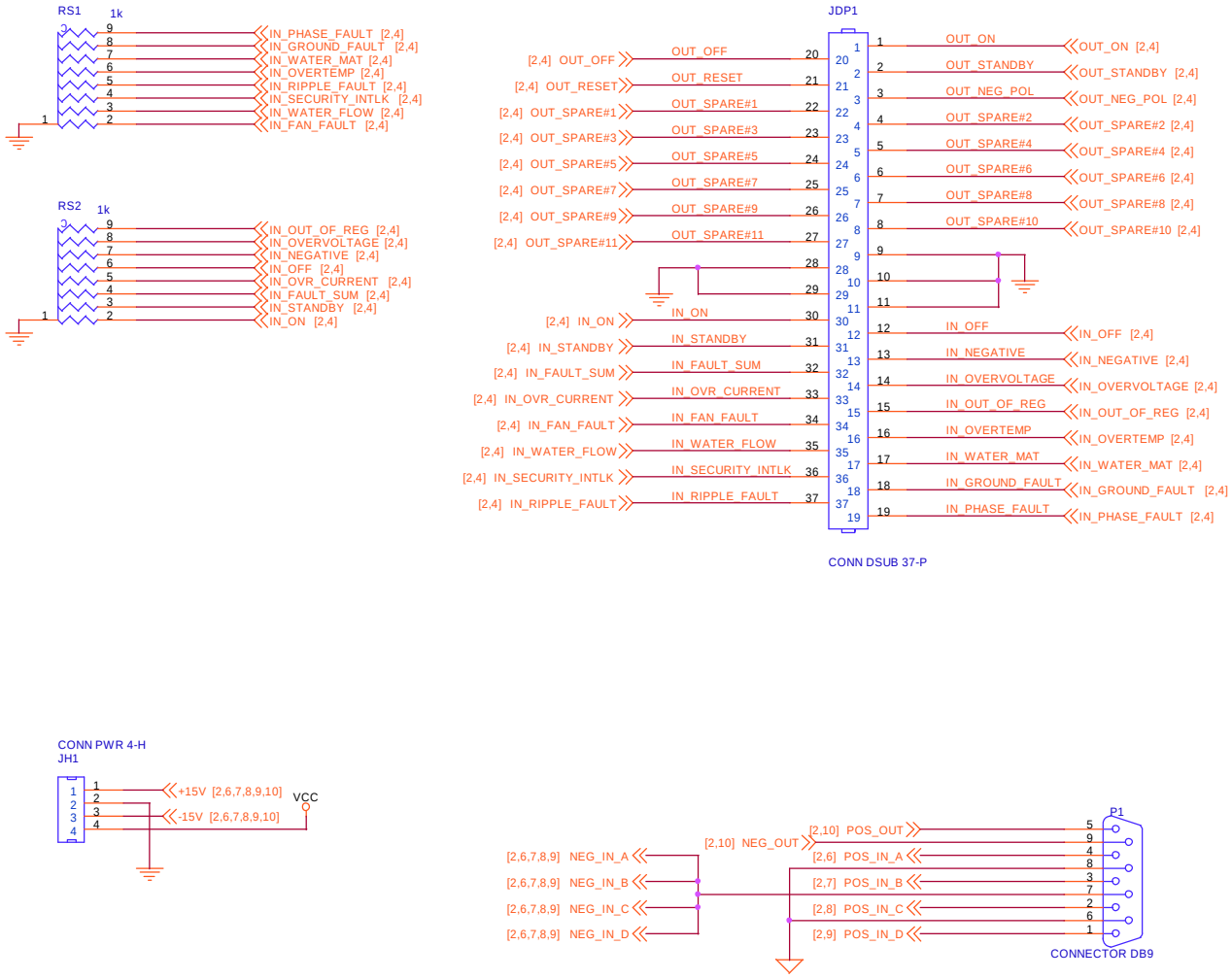

APOGEE LABS INC.
210 SOUTH THIRD STREET, NORTH WALES PA 19044 [PHONE:1-215-699-2060]

Title	**BNL-PSI**		
Size B	Document Number **SHPC-029**	Date Tuesday, April 17, 2001	Rev B
Engineer Kevin Krasinski		Sheet 3 of 11	
		Page Name PSI 1U CONNECTORS	

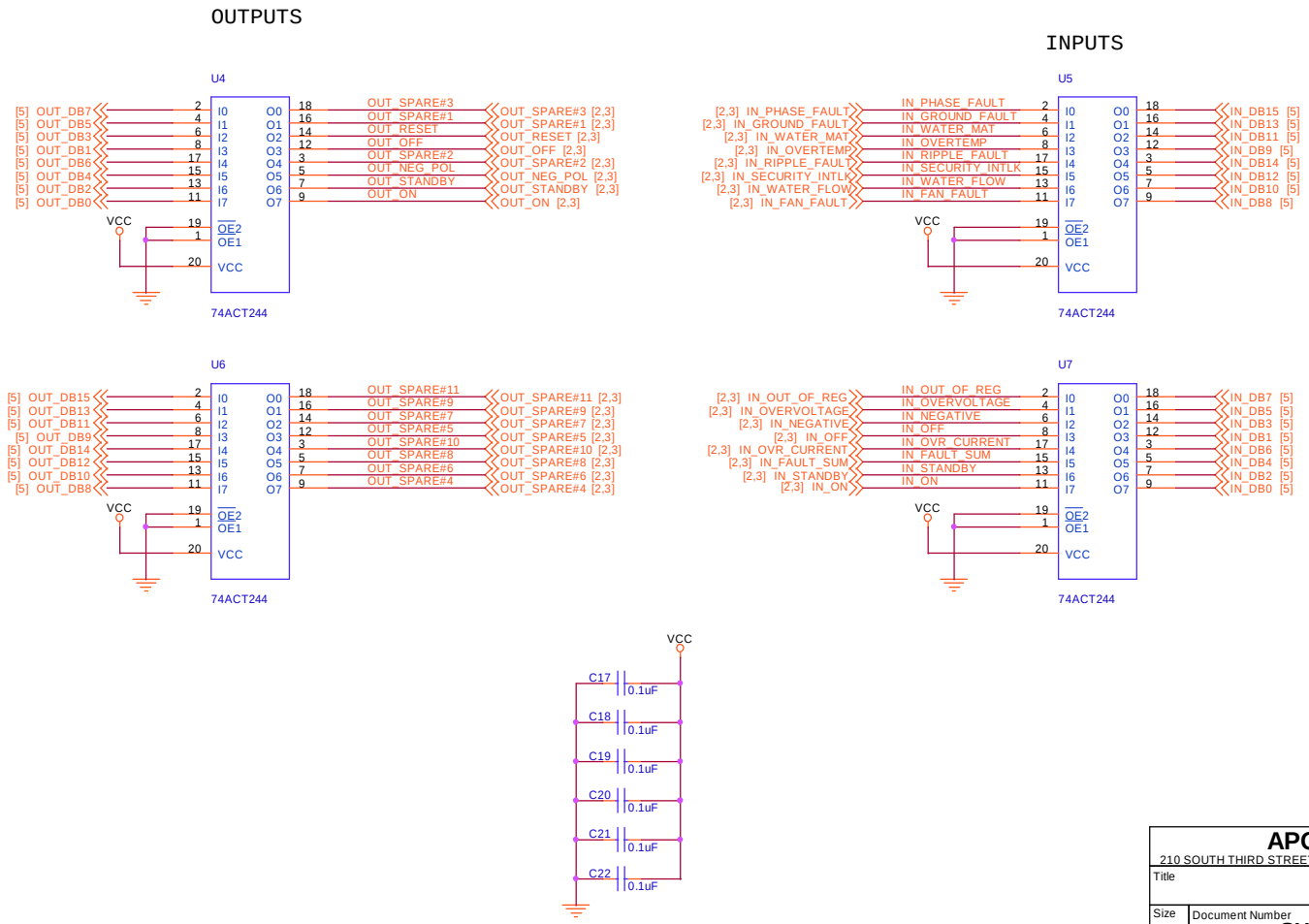

APOGEE LABS INC.
210 SOUTH THIRD STREET, NORTH WALES PA 19044 [PHONE:1-215-699-2060]

Title	BNL-PSI		
Size B	Document Number SHPC-029	Date Tuesday, April 17, 2001	Rev B
Engineer Kevin Krasinski		Sheet 4 of 11	
		Page Name BUS DRIVERS	

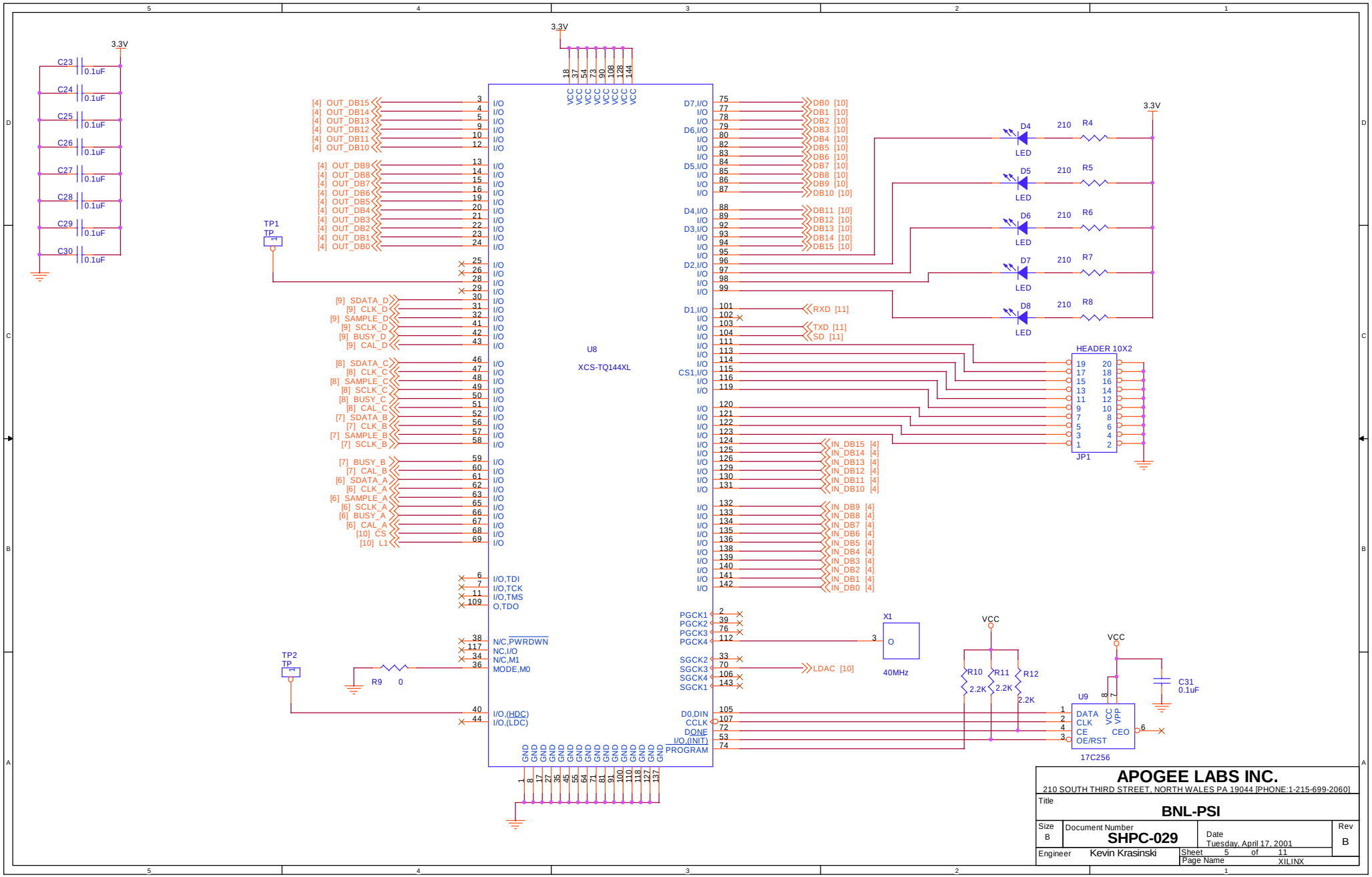

APOGEE LABS INC.
210 SOUTH THIRD STREET, NORTH WALES PA 19044 [PHONE:1-215-699-2060]

Title	BNL-PSI		
Size B	Document Number SHPC-029	Date Tuesday, April 17, 2001	Rev B
Engineer Kevin Krasinski		Sheet 5 of 11	
		Page Name XILINX	

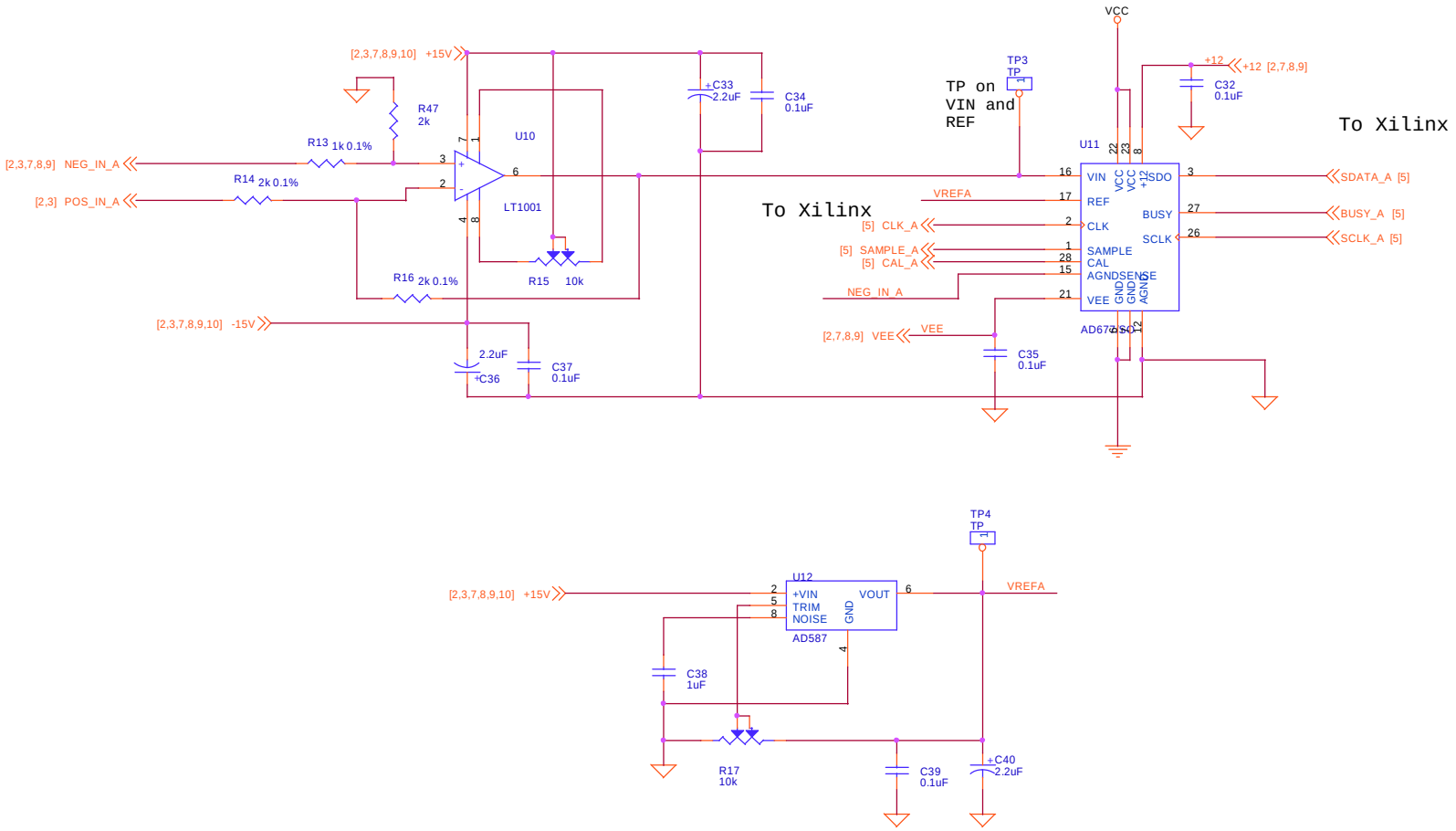

APOGEE LABS INC.

210 SOUTH THIRD STREET, NORTH WALES PA 19044 [PHONE:1-215-699-2060]

Title	BNL-PSI		
Size B	Document Number SHPC-029	Date Tuesday, April 17, 2001	Rev B
Engineer Kevin Krasinski		Sheet 6 of 11	
		Page Name ADC CH1	

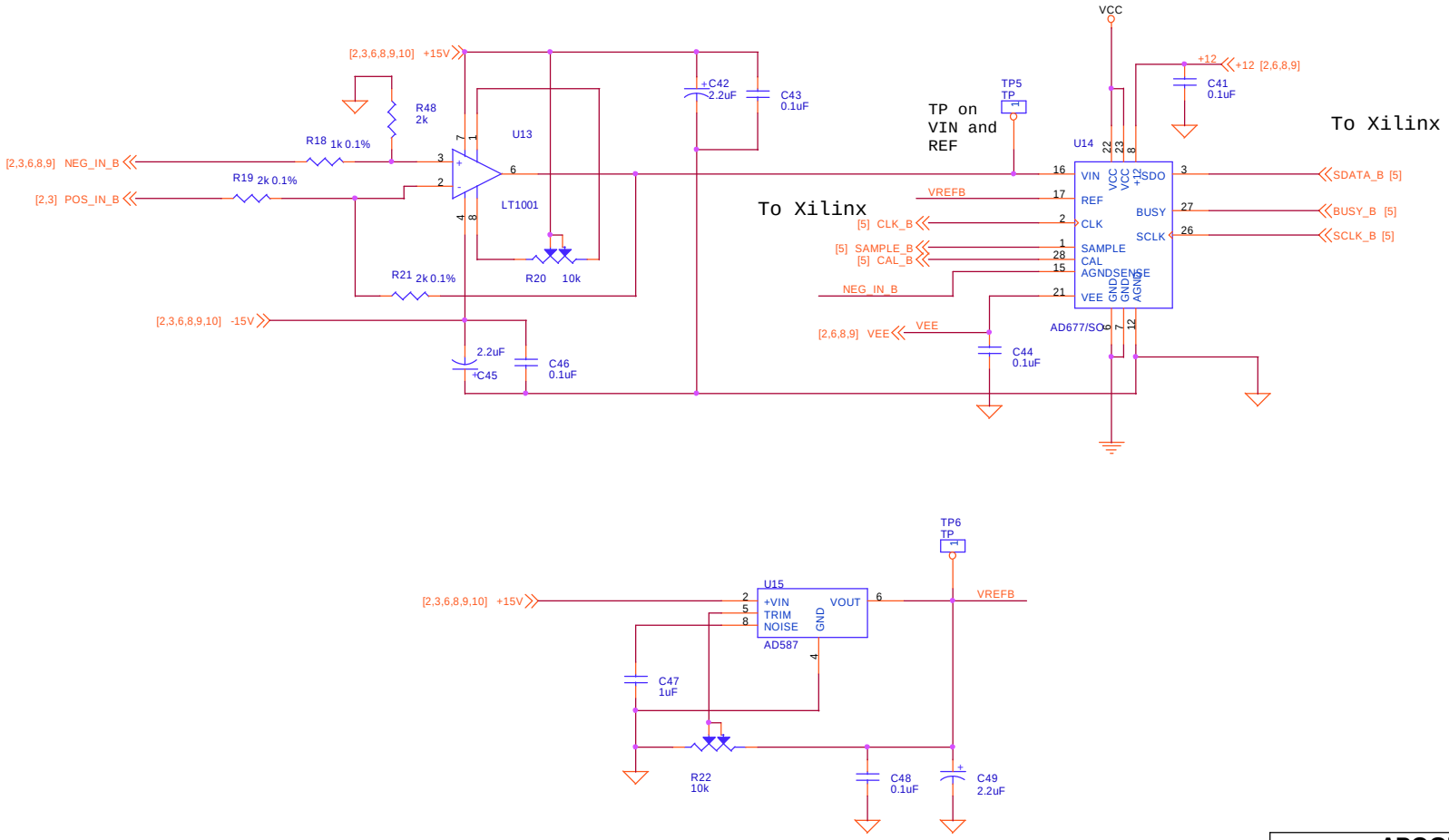

APOGEE LABS INC.

210 SOUTH THIRD STREET, NORTH WALES PA 19044 [PHONE:1-215-699-2060]

Title	BNL-PSI		
Size B	Document Number SHPC-029	Date Tuesday, April 17, 2001	Rev B
Engineer Kevin Krasinski		Sheet 7 of 11	
		Page Name ADC CH2	

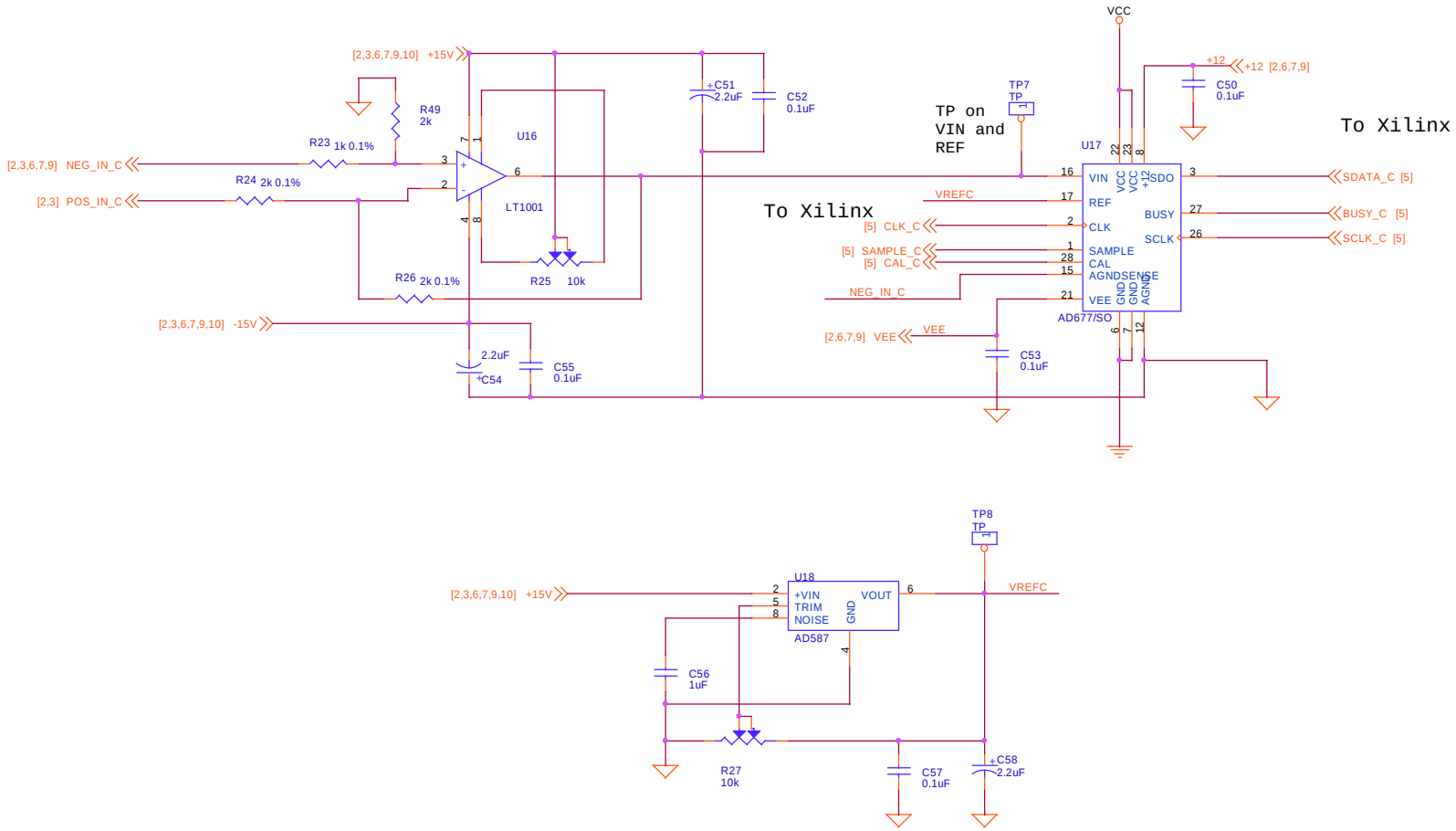

APOGEE LABS INC.

210 SOUTH THIRD STREET, NORTH WALES PA 19044 [PHONE:1-215-699-2060]

Title	BNL-PSI		
Size B	Document Number SHPC-029	Date Tuesday, April 17, 2001	Rev B
Engineer Kevin Krasinski		Sheet 8 of 11	
		Page Name ADC CH3	

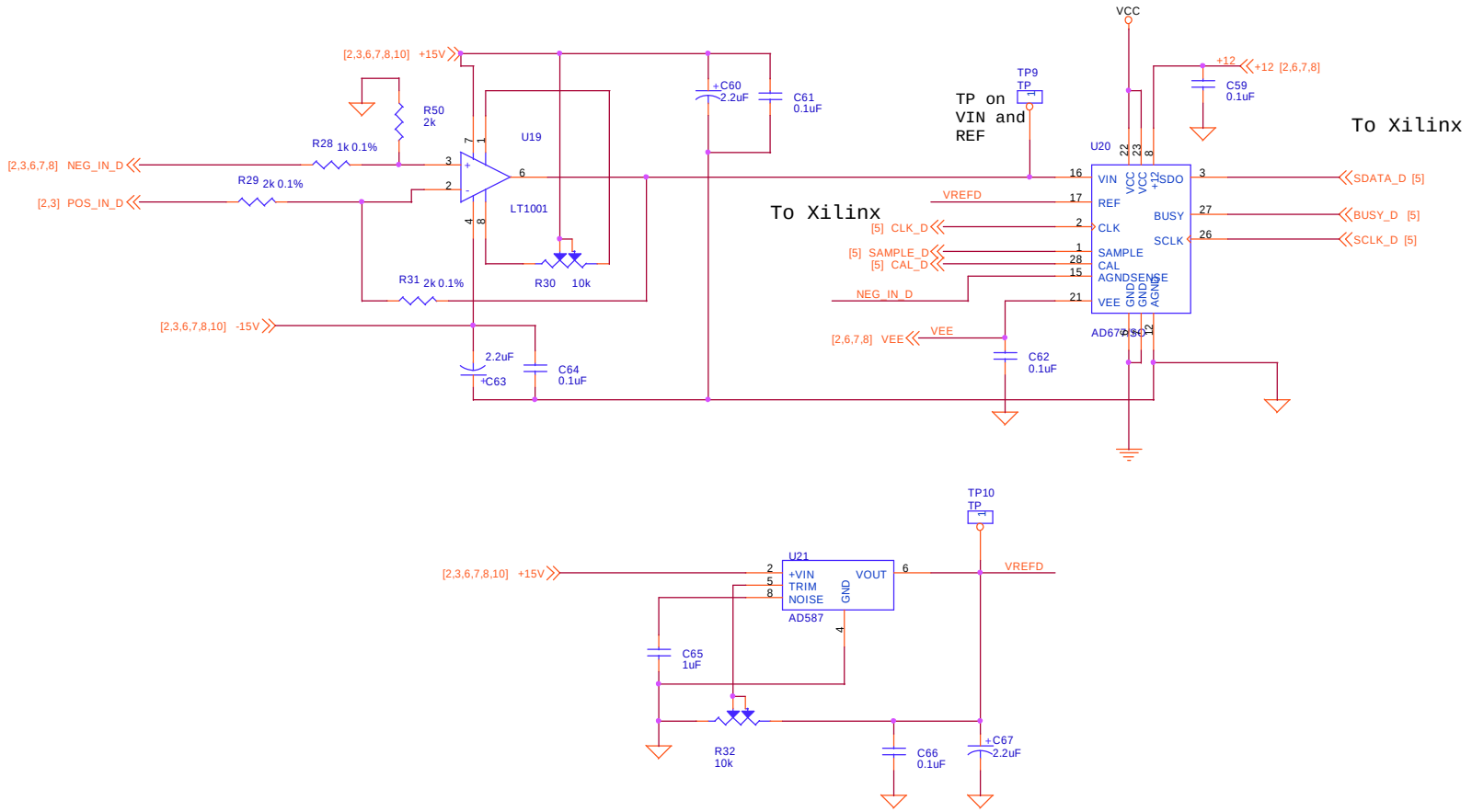

APOGEE LABS INC.

210 SOUTH THIRD STREET, NORTH WALES PA 19044 [PHONE:1-215-699-2060]

Title	BNL-PSI		
Size B	Document Number SHPC-029	Date Tuesday, April 17, 2001	Rev B
Engineer Kevin Krasinski		Sheet 9 of 11	
		Page Name ADC CH4	

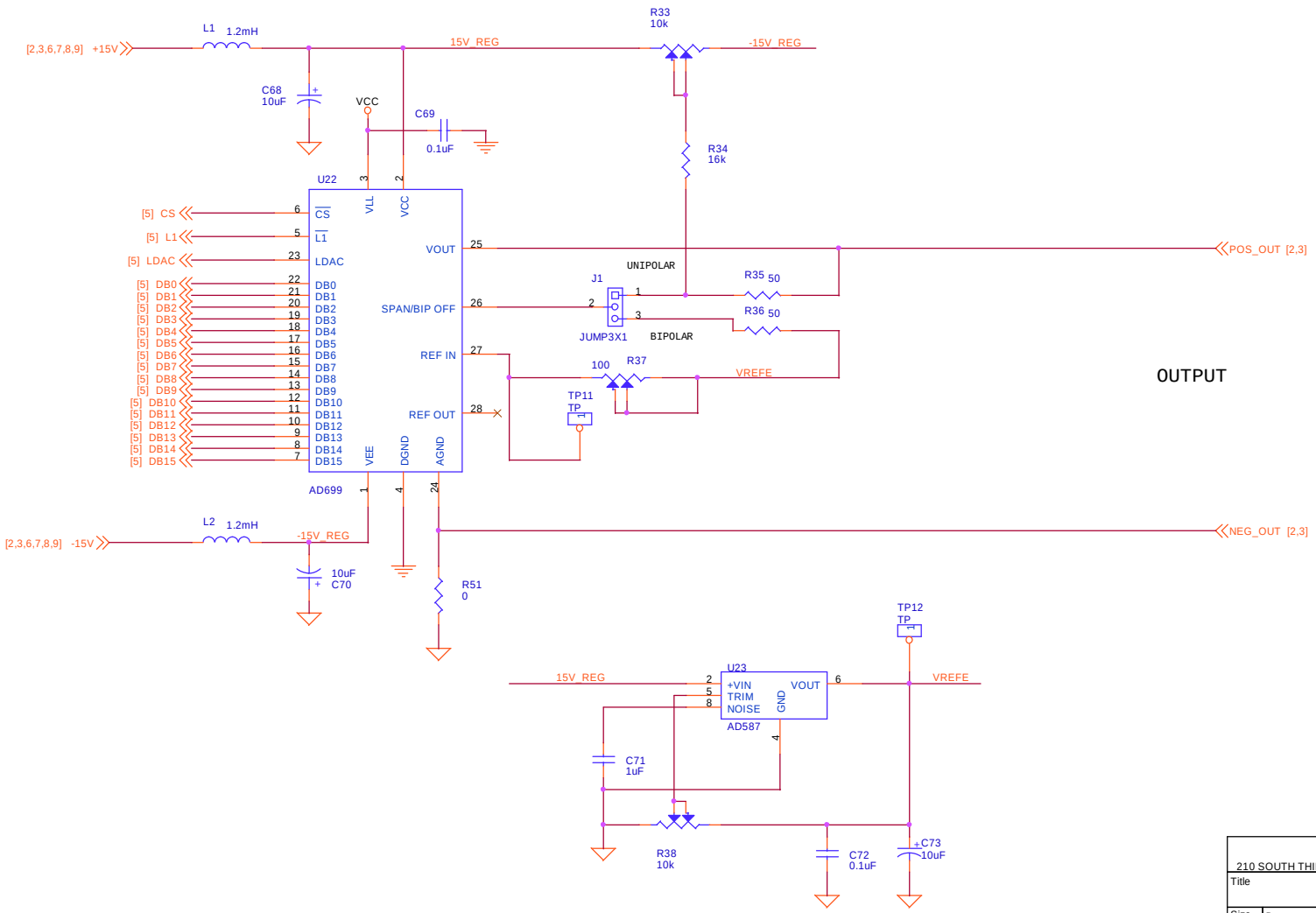

APOGEE LABS INC.
210 SOUTH THIRD STREET, NORTH WALES PA 19044 [PHONE:1-215-699-2060]

Title	BNL-PSI		
Size B	Document Number SHPC-029	Date Tuesday, April 17, 2001	Rev B
Engineer Kevin Krasinski		Sheet 10 of 11	
		Page Name DAC CH1	

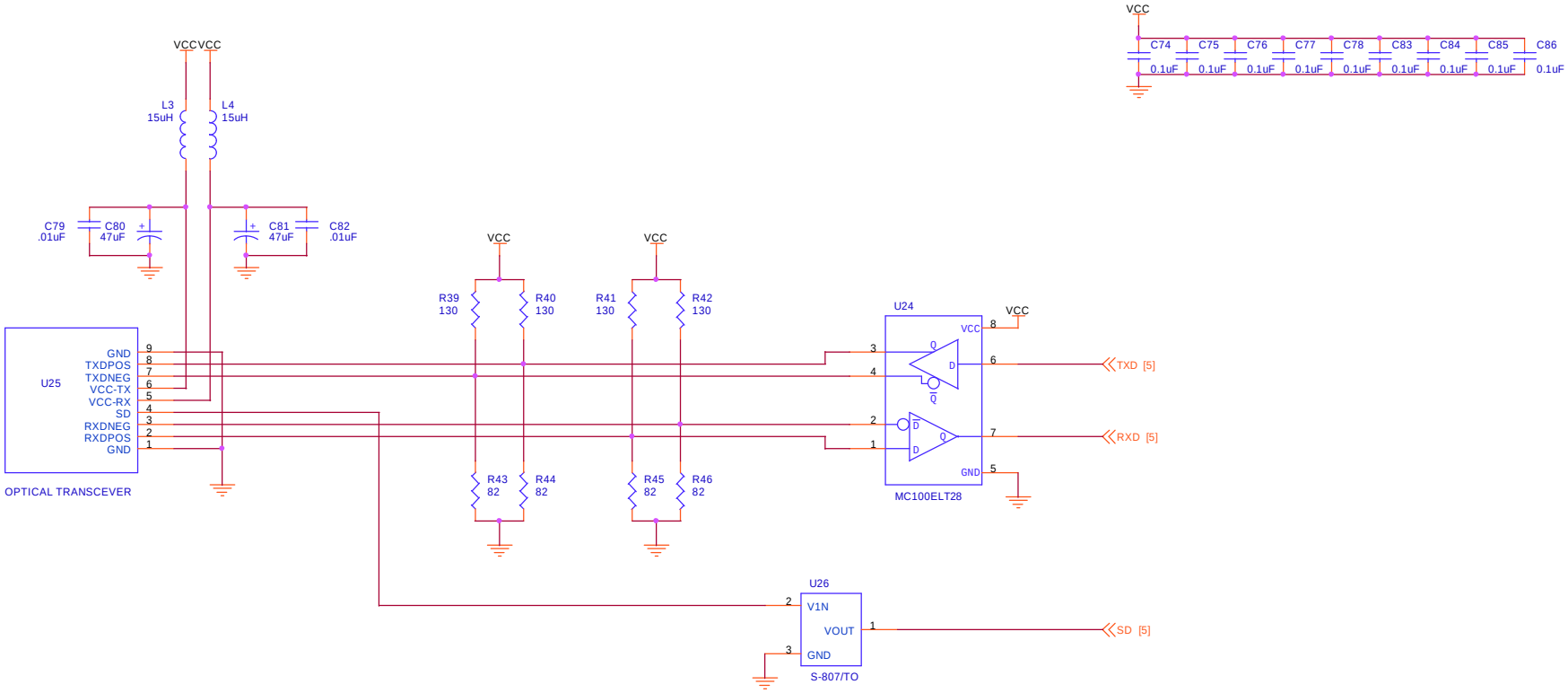

APOGEE LABS INC.

210 SOUTH THIRD STREET, NORTH WALES PA 19044 [PHONE:1-215-699-20

Title	BNL-PSI		
Size B	Document Number SHPC-029	Date Tuesday, April 17, 2001	Rev B
Engineer Kevin Krasinski		Sheet 11 of 11	
		Page Name FIBER TX/RX	