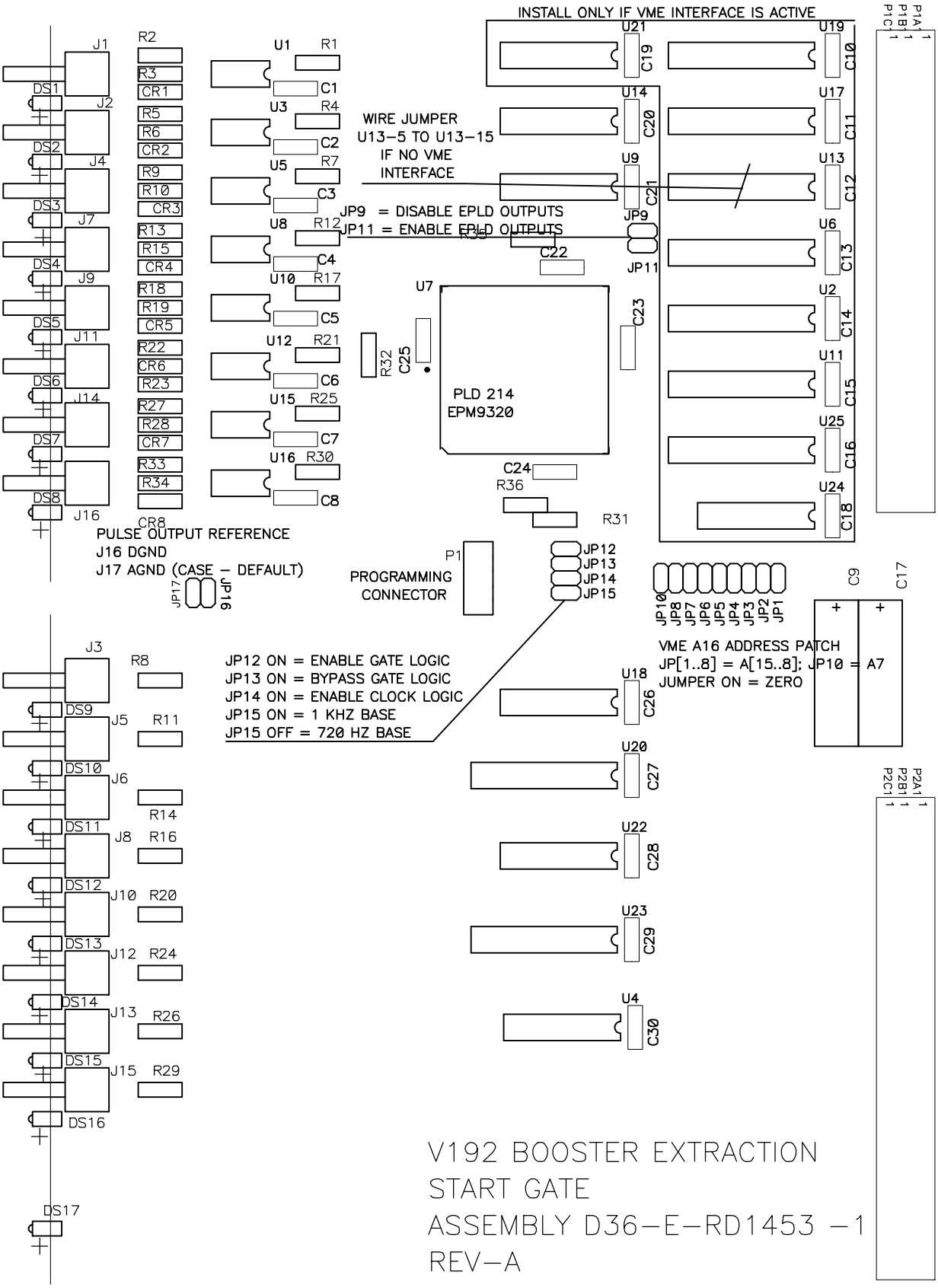

V192 BOOSTER EXTRACTION
START GATE
ASSEMBLY D36–E–RD1453 –1
REV–A