BNL, BNL 4/20/00 11:50 AM PASS_VIDEO_LINKS.dwg

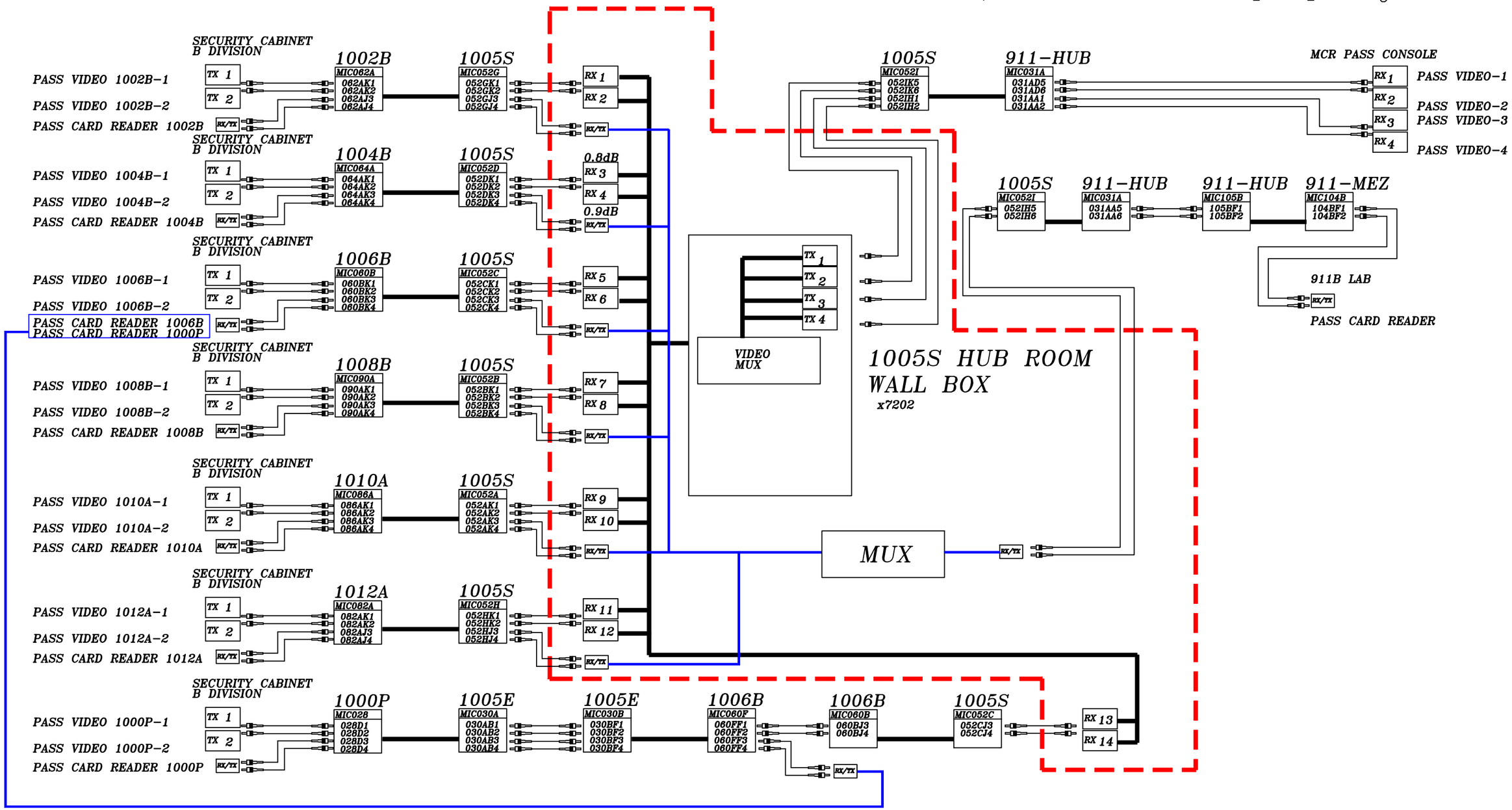

PASS CARD READER NETWORK IS COMBINED IN 1006B!!

NOTE: POWER MEASURED AT 1300nM.

REV.	ZONE	ECN NO.	DATE	BY	CKR	APP.

-3	-2	-1	REF DESIGNATOR	ITEM NO.	DESCRIPTION	MAT'L DWG NO.,BNL NO.
QTY REQD						

INTERPRET IN GENERAL ACCORDANCE WITH ASME Y14.24M-1989

UNLESS OTHERWISE SPECIFIED DIMENSIONS ARE IN INCHES

DECIMAL TOLERANCES .X ±.030 .XX ±.015 .XXX ±.005 ANGULAR TOLERANCE ± .5°

OUTSTANDING ECN

NA FINISH

BREAK SHARP EDGES MAX. XX MIN. XX

Q.A. CATEGORY A-3

		DATE
DRAWN BY	Ed Koropsak	10/12/99
CHECKED BY		
DESIGN APPROVAL		
ENGINEER APPROVAL	Roy Heyder	
SUPVR. APPROVAL		

NEXT ASSEMBLY

BROOKHAVEN NATIONAL LABORATORY
UPTON, N.Y. 11973

RHIC CONTROLS

FIBER OPTIC PATHS

PASS VIDEO LINKS

SIZE D | DRAWING NUMBER 94028XXX | REV. A

MATERIAL: ——— SCALE: FULL WEIGHT: – SHEET 1 OF 1

*AUTOCAD