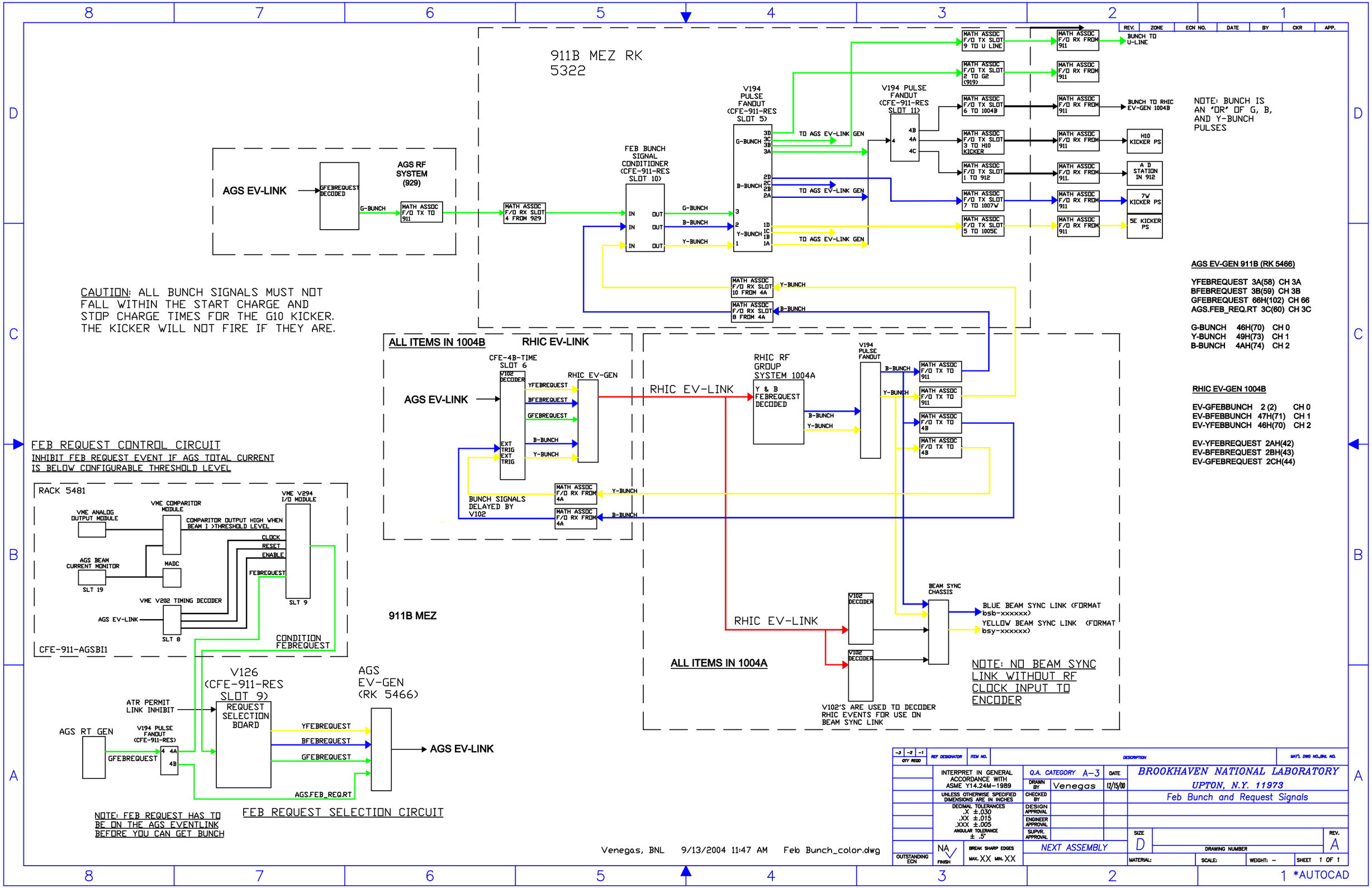
911B MEZ RK
5322
AGS EV-LINK
GFEBREQUEST DECODED
G-BUNCH
AGS RF SYSTEM (929)
MATH ASSOC F/O TX TO 911
MATH ASSOC F/O RX SLOT 4 FROM 929
FEB BUNCH SIGNAL CONDITIONER (CFE-911-RES SLOT 10)
IN OUT
G-BUNCH
B-BUNCH
Y-BUNCH
V194 PULSE FANOUT (CFE-911-RES SLOT 5)
TO AGS EV-LINK GEN
V194 PULSE FANOUT (CFE-911-RES SLOT 11)
MATH ASSOC F/O TX SLOT 9 TO U LINE
MATH ASSOC F/O TX SLOT 2 TO G2 (919)
MATH ASSOC F/O TX SLOT 6 TO 1004B
MATH ASSOC F/O TX SLOT 3 TO H10 KICKER
MATH ASSOC F/O TX SLOT 1 TO 912
MATH ASSOC F/O TX SLOT 7 TO 1007W
MATH ASSOC F/O TX SLOT 5 TO 1005E
MATH ASSOC F/O RX FROM 911
BUNCH TO U-LINE
BUNCH TO RHIC EV-GEN 1004B
H10 KICKER PS
A D STATION IN 912
7W KICKER PS
5E KICKER PS
MATH ASSOC F/O RX SLOT 10 FROM 4A
MATH ASSOC F/O RX SLOT 8 FROM 4A
REV. ZONE ECN NO. DATE BY CKR APP.
NOTE: BUNCH IS AN "OR" OF G, B, AND Y-BUNCH PULSES
CAUTION: ALL BUNCH SIGNALS MUST NOT FALL WITHIN THE START CHARGE AND STOP CHARGE TIMES FOR THE G10 KICKER. THE KICKER WILL NOT FIRE IF THEY ARE.
AGS EV-GEN 911B (RK 5466)
YFEBREQUEST 3A(58) CH 3A
BFEBREQUEST 3B(59) CH 3B
GFEBREQUEST 66H(102) CH 66
AGS.FEB_REQ.RT 3C(60) CH 3C
G-BUNCH 46H(70) CH 0
Y-BUNCH 49H(73) CH 1
B-BUNCH 4AH(74) CH 2
ALL ITEMS IN 1004B
RHIC EV-LINK
CFE-4B-TIME SLOT 6
V102 DECODER
RHIC EV-GEN
YFEBREQUEST
BFEBREQUEST
GFEBREQUEST
B-BUNCH
Y-BUNCH
EXT TRIG
BUNCH SIGNALS DELAYED BY V102
MATH ASSOC F/O RX FROM 4A
RHIC RF GROUP SYSTEM 1004A
Y & B FEBREQUEST DECODED
V194 PULSE FANOUT
MATH ASSOC F/O TX TO 911
MATH ASSOC F/O TX TO 4B
RHIC EV-GEN 1004B
EV-GFEBBUNCH 2 (2) CH 0
EV-BFEBBUNCH 47H(71) CH 1
EV-YFEBBUNCH 46H(70) CH 2
EV-YFEBREQUEST 2AH(42)
EV-BFEBREQUEST 2BH(43)
EV-GFEBREQUEST 2CH(44)
FEB REQUEST CONTROL CIRCUIT
INHIBIT FEB REQUEST EVENT IF AGS TOTAL CURRENT IS BELOW CONFIGURABLE THRESHOLD LEVEL
RACK 5481
VME ANALOG OUTPUT MODULE
VME COMPARITOR MODULE
COMPARITOR OUTPUT HIGH WHEN BEAM I >THRESHOLD LEVEL
VME V294 I/O MODULE
CLOCK
RESET
ENABLE
FEBREQUEST
AGS BEAM CURRENT MONITOR
MADC
SLT 19
SLT 9
VME V202 TIMING DECODER
AGS EV-LINK
SLT 8
CONDITION FEBREQUEST
CFE-911-AGSBI1
911B MEZ
V126 (CFE-911-RES SLOT 9)
ATR PERMIT LINK INHIBIT
REQUEST SELECTION BOARD
AGS EV-GEN (RK 5466)
AGS RT GEN
V194 PULSE FANOUT (CFE-911-RES)
GFEBREQUEST
AGS.FEB_REQ.RT
AGS EV-LINK
NOTE: FEB REQUEST HAS TO BE ON THE AGS EVENTLINK BEFORE YOU CAN GET BUNCH
FEB REQUEST SELECTION CIRCUIT
RHIC EV-LINK
BEAM SYNC CHASSIS
BLUE BEAM SYNC LINK (FORMAT bsb-xxxxxx)
YELLOW BEAM SYNC LINK (FORMAT bsy-xxxxxx)
ALL ITEMS IN 1004A
NOTE: NO BEAM SYNC LINK WITHOUT RF CLOCK INPUT TO ENCODER
V102'S ARE USED TO DECODER RHIC EVENTS FOR USE ON BEAM SYNC LINK
INTERPRET IN GENERAL ACCORDANCE WITH ASME Y14.24M-1989
UNLESS OTHERWISE SPECIFIED DIMENSIONS ARE IN INCHES
DECIMAL TOLERANCES .X ±.030 .XX ±.015 .XXX ±.005
ANGULAR TOLERANCE ± .5°
Q.A. CATEGORY A-3
DRAWN BY Venegas
DATE 12/15/00
CHECKED BY
DESIGN APPROVAL
ENGINEER APPROVAL
SUPVR. APPROVAL
NEXT ASSEMBLY
BROOKHAVEN NATIONAL LABORATORY
UPTON, N.Y. 11973
Feb Bunch and Request Signals
SIZE D
REV. A
DRAWING NUMBER
MATERIAL:
SCALE:
WEIGHT: –
SHEET 1 OF 1
Venegas, BNL 9/13/2004 11:47 AM Feb Bunch_color.dwg
*AUTOCAD

ACS, BNL 8/20/99 2:07 PM FEB_LINKS.dwg

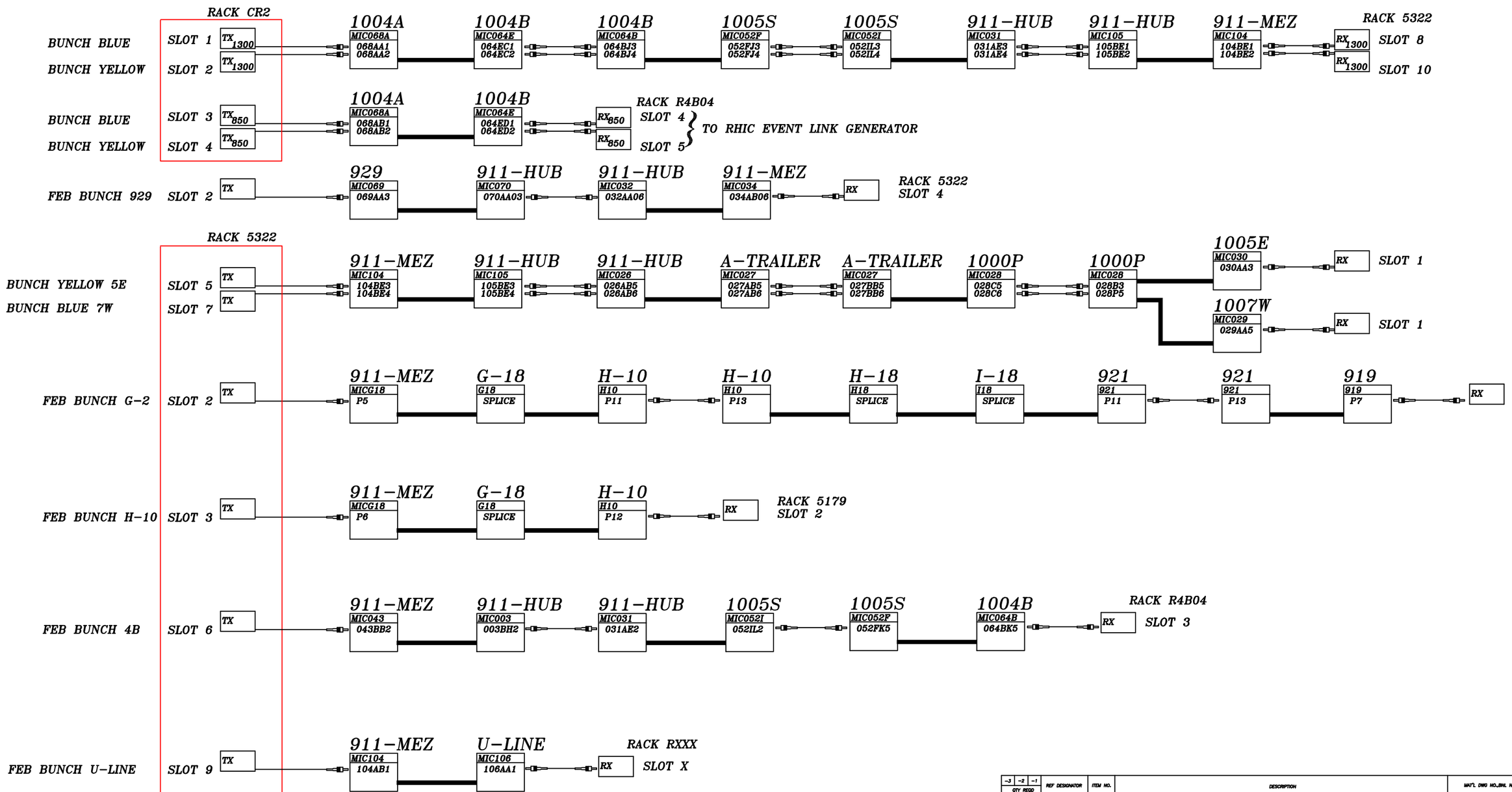

REV.	ZONE	ECN NO.	DATE	BY	CKR	APP.

-3	-2	-1	REF DESIGNATOR	ITEM NO.	DESCRIPTION	MAT'L. DWG NO.,BNL NO.
QTY REQD						

INTERPRET IN GENERAL ACCORDANCE WITH ASME Y14.24M-1989

UNLESS OTHERWISE SPECIFIED DIMENSIONS ARE IN INCHES

DECIMAL TOLERANCES
.X ±.030
.XX ±.015
.XXX ±.005
ANGULAR TOLERANCE ± .5°

NA FINISH — BREAK SHARP EDGES — MAX. XX MIN. XX

OUTSTANDING ECN

Q.A. CATEGORY A-3

		DATE
DRAWN BY	Ed Koropsak	2/25/99
CHECKED BY		
DESIGN APPROVAL		
ENGINEER APPROVAL	R. MICHNOFF	
SUPVR. APPROVAL		

NEXT ASSEMBLY

BROOKHAVEN NATIONAL LABORATORY
UPTON, N.Y. 11973

RHIC CONTROLS

FIBER OPTIC PATHS

FEB BUNCH LINKS

SIZE D — DRAWING NUMBER 94028XXX — REV. A

MATERIAL: ——— SCALE: FULL WEIGHT: – SHEET 1 OF 1

*AUTOCAD