Controls, C-AD 4/7/2004 4:05 PM 911-C_TIMING_LINKS.dwg

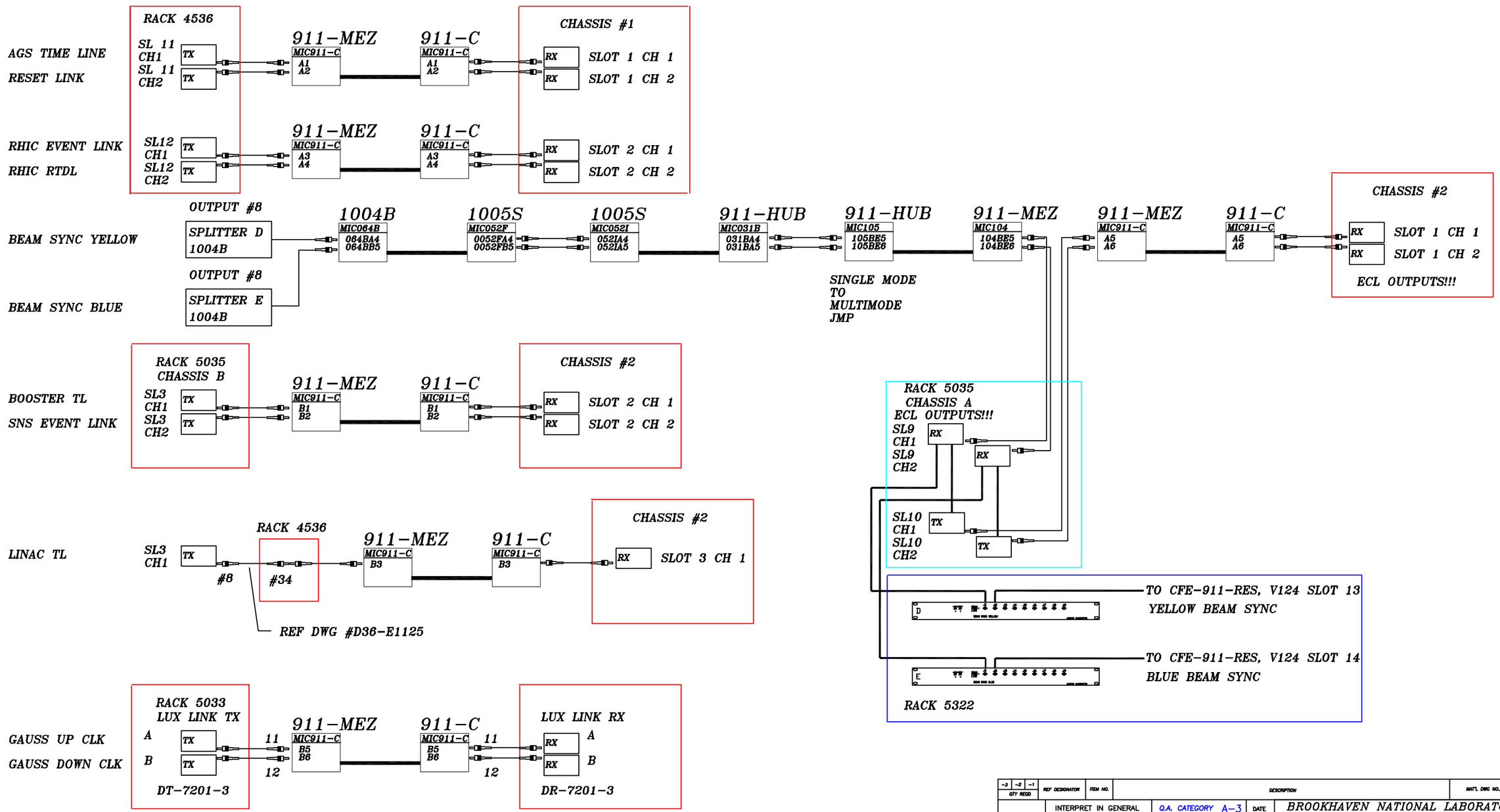


| REV. | ZONE | ECN NO. | DATE | BY | CKR | APP. |
|---|---|---|---|---|---|---|

| | | | |
|---|---|---|---|
| INTERPRET IN GENERAL ACCORDANCE WITH ASME Y14.24M-1989 | Q.A. CATEGORY A-3 | DATE | BROOKHAVEN NATIONAL LABORATORY UPTON, N.Y. 11973 |
| UNLESS OTHERWISE SPECIFIED DIMENSIONS ARE IN INCHES | DRAWN BY Ed Koropsak | 7/14/99 | RHIC CONTROLS |
| DECIMAL TOLERANCES .X ±.030 .XX ±.015 .XXX ±.005 ANGULAR TOLERANCE ± .5° | CHECKED BY | | FIBER OPTIC PATHS |
| | DESIGN APPROVAL | | 911-C TIMING LINKS |
| | ENGINEER APPROVAL R. MICHNOFF | | |
| | SUPVR. APPROVAL | | SIZE D — DRAWING NUMBER 94028XXX — REV. A |
| NA FINISH — BREAK SHARP EDGES MAX. XX MIN. XX | NEXT ASSEMBLY | | MATERIAL: — SCALE: FULL WEIGHT: – SHEET 1 OF 1 |
| OUTSTANDING ECN | | | |

| -3 | -2 | -1 | REF DESIGNATOR | ITEM NO. | DESCRIPTION | MAT'L DWG NO./BNL NO. |
|---|---|---|---|---|---|---|
| QTY REQD | | | | | | |

*AUTOCAD

PDF created with FinePrint pdfFactory Pro trial version http://www.fineprint.com