REV.	ZONE	ECN NO.	DATE	BY	CKR	APP.

BNL, BNL 2/7/01 11:57 AM 8b_crystal_coll.dwg

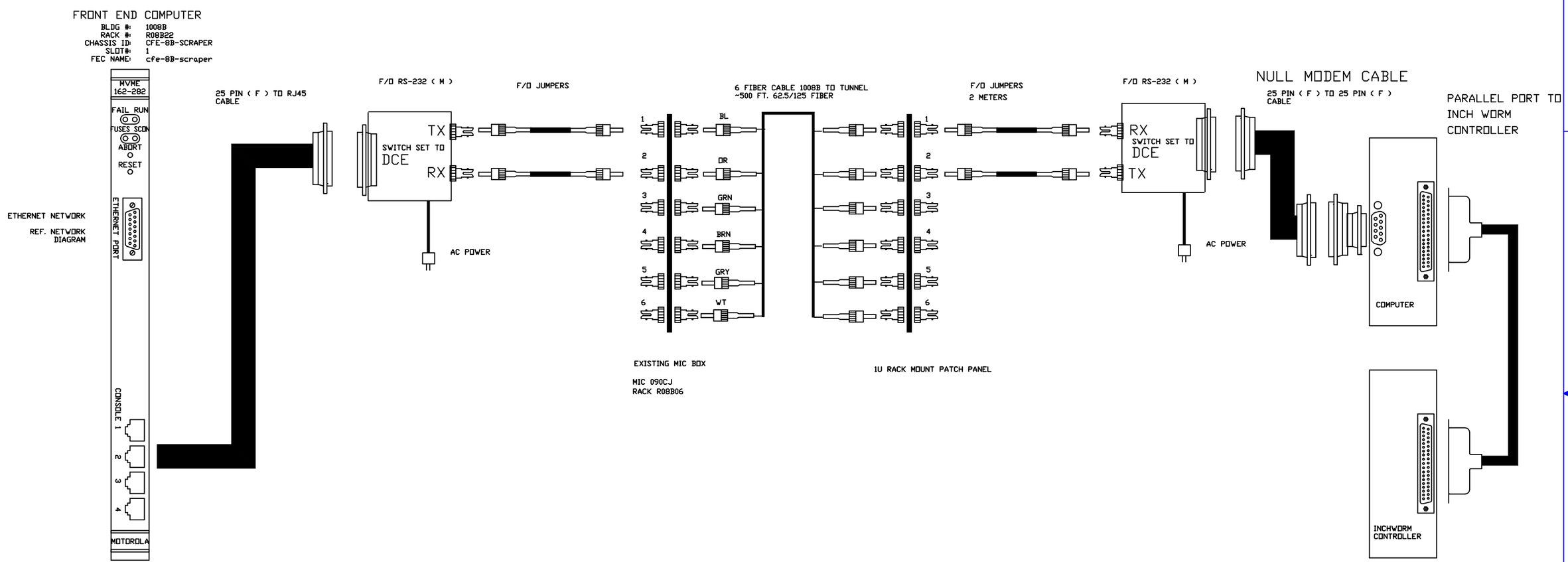

TO CHECK LINK…
LOG INTO FEC--telnet cfe-xx-xxx shell
THEN TYPE--col
PROMPT SHOULD RETURN

QTY REQD -3	QTY REQD -2	QTY REQD -1	REF DESIGNATOR	ITEM NO.	DESCRIPTION	MAT'L DWG NO./BNL NO.
		1	N/A	11	DUPLEX MULTIMODE F/O JUMPER, LENGTH AS REQUIRED	X
		1	N/A	10	25 PIN (M) TO 9 PIN (F) ADAPTER (BLACK BOX)	FA520A-R2
		200	N/A	9	6 FIBER INDOOR/OUTDOOR CABLE (FIS)--706-LSZH-10CB-62PF'D	X
		1	N/A	8	25 PIN (F) TO 25 PIN (F) NULL MODEM CABLE (BLACK BOX)	BC00501
		1	N/A	7	25 PIN (F) TO RJ45 CABLE	
		2	N/A	6	RS-232 TO F/O TRANCEIVER (MATH ASSOC.)	5002-1
		1	N/A	5	2 METER MULTIMODE FIBER JUMPER, 62.5/125 WITH ST CONN. (FIS)	D2-88M-2-FIS
		12	N/A	4	AMP ST FIBER OPTIC CONNECTOR	504001-1
		1	N/A	3	BLANK PANEL FOR TERMINATION BOX (FIS)	F1-BLANK
		1	N/A	2	6 PORT ST PANEL (FIS)	F1-ST6LM
		1	N/A	1	19" RACK MOUNT FIBER TERMINATION BOX (FIS)	F1-RM12

INTERPRET IN GENERAL ACCORDANCE WITH ASME Y14.24M-1989

UNLESS OTHERWISE SPECIFIED DIMENSIONS ARE IN INCHES

DECIMAL TOLERANCES
.X ±.030
.XX ±.015
.XXX ±.005
ANGULAR TOLERANCE
± .5°

NA FINISH

BREAK SHARP EDGES
MAX. XX MIN. XX

OUTSTANDING ECN

Q.A. CATEGORY A-3

		DATE
DRAWN BY	Koropsak	12/9/99
CHECKED BY		
DESIGN APPROVAL		
ENGINEER APPROVAL	BRIAN OERTER	12/9/99
SUPVR. APPROVAL		

NEXT ASSEMBLY

BROOKHAVEN NATIONAL LABORATORY
UPTON, N.Y. 11973

C-A CONTROLS WIRING DIAGRAM
SERV BLDG 1008B, VME CHASSIS CFE-8B-SCALER
CPU to F/O RS-232

SIZE D
DRAWING NUMBER 94028xxx
REV. A

MATERIAL: ——— SCALE: NA WEIGHT: – SHEET X of X

*AUTOCAD