RHIC Accelerator Controls Section
Bldg. 1002C Rack Diagrams
BNL Drawing Numbers 94028xxx

Brookhaven National Laboratory, Upton, New York 11973

Created By: Bill Venegas
Last Updated 6/27/01

Power Distribution
📖 Rack R2C13 (Sheet 1)

Spares
📖 F/O Channels (Sheet 3)

Serial Links
📖 Event Link (Sheet 4)
📖 Real Time Data Link (Sheet 6)
📖 Reset Link (Sheet 8)
📖 Beam Sync Yellow Link (Sheet 9)
📖 Beam Sync Blue Link (Sheet 10)

VME Chassis CFE-2C-BRAHMS modules
📖 Front End Computer, V108 Utility Module (Sheet 11)
📖 V102 Delay Module (Sheet 12)
📖 V115 WFG A: D1 (PS-436),D2 (PS-360-1) (Sheet 13)
📖 V115 WFG A: D3 (PS-450-1),D4 (PS-450-3) (Sheet 14)
📖 V115 WFG A: D5 (PS-360-2),Spare (Sheet 15)
📖 V124 Beam Sync Modules (Sheet 16,17)
📖 (Sheet 18)
📖 (Sheet 19)
📖 SIS3803 VME Scaler (Sheet 20)
📖 A&B Programmable Controller (Sheet 21)
📖 VMIVME Bit 3 (Sheet 22)

NOTE: Sheets 2, 5, 7 are Blank.

REV.	ZONE	ECN NO.	DATE	BY	CKR	APP.

Controls 7/22/99 3:09 PM BRAHMS_01.dwg

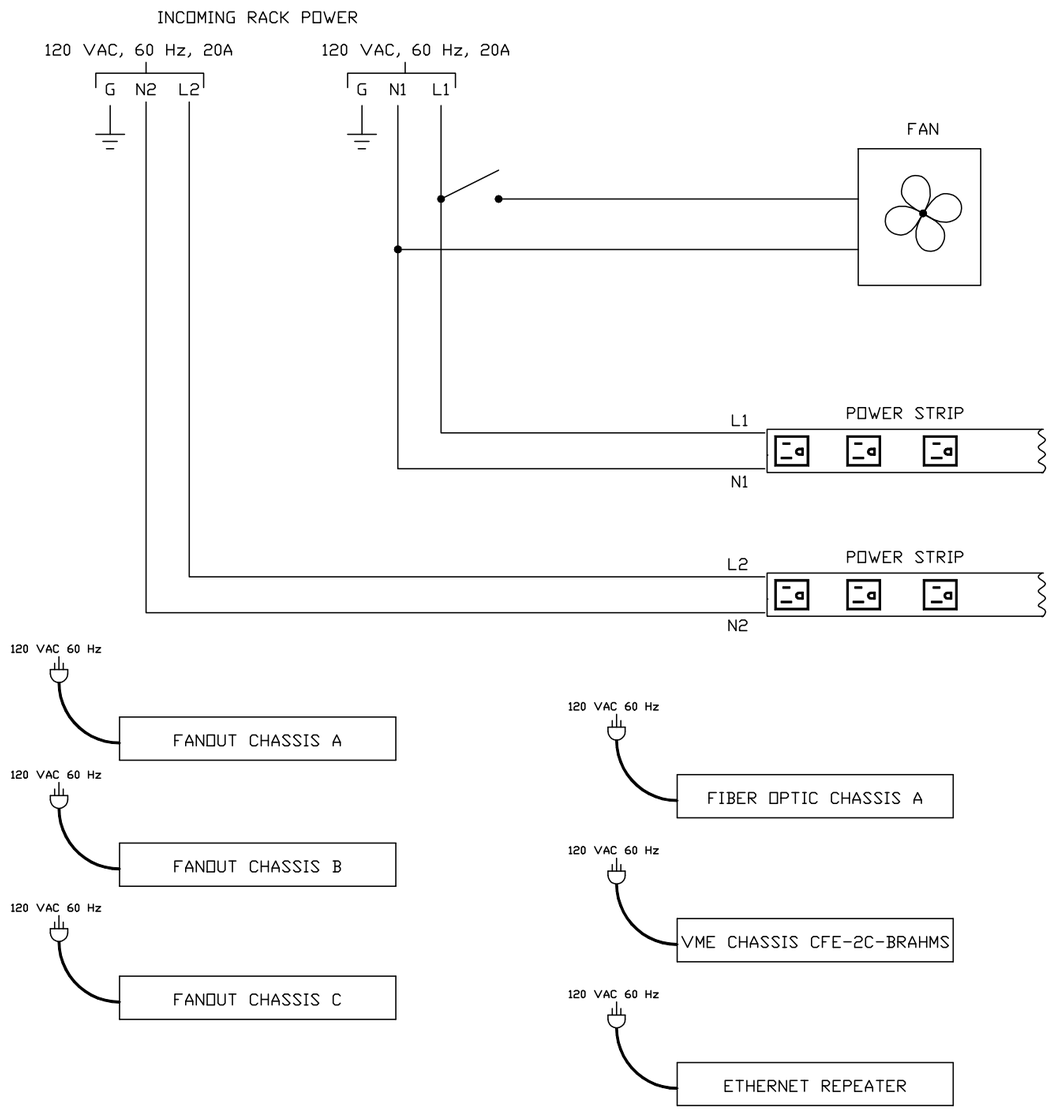

RACK R2C13

NOTE: ALL 120 VAC, 60 Hz POWER CORDS
PLUG INTO POWER STRIP OUTLETS

-3	-2	-1	REF DESIGNATOR	ITEM NO.	DESCRIPTION	MAT'L DWG NO.,SPNL NO.
		X		11		
		X		10		
		X		9		
		10		8	SERIAL LINK TWINAX CABLE, LENGTH AS REQUIRED	94028176
		6		7	SERIAL LINK TWINAX CABLE, 1 FT	94028176
		6		6	DUPLEX MULTIMODE FIBER OPTIC CABLE, T115 TO LOW RES PS INTERFACE MODULE	94028249
		5		5	SINGLE MODE FIBER OPTIC CABLE	94028251
		X		4		
		3		3	TRANSITION MODULE P2 RIBBON CABLE, V115	94028159
		X		2		
		2		1	NETWORK CABLE TO FEC	

QTY REQD

INTERPRET IN GENERAL ACCORDANCE WITH ASME Y14.24M-1989

UNLESS OTHERWISE SPECIFIED DIMENSIONS ARE IN INCHES

DECIMAL TOLERANCES
.X ±.030
.XX ±.015
.XXX ±.005
ANGULAR TOLERANCE
± .5°

NA FINISH

BREAK SHARP EDGES
MAX. XX MIN. XX

OUTSTANDING ECN

Q.A. CATEGORY A-3

		DATE
DRAWN BY	VENEGAS	7/22/99
CHECKED BY		
DESIGN APPROVAL		
ENGINEER APPROVAL	R. MICHNOFF	7/14/98
SUPVR. APPROVAL		

NEXT ASSEMBLY

BROOKHAVEN NATIONAL LABORATORY
UPTON, N.Y. 11973

RHIC CONTROLS WIRING DIAGRAM
BLDG, 1002C, RACK R2C13
POWER DISTRIBUTION

SIZE D | DRAWING NUMBER 94028XXX | REV. A

MATERIAL: ——— SCALE: NA WEIGHT: – SHEET 1 OF X

*AUTOCAD

REV.	ZONE	ECN NO.	DATE	BY	CKR	APP.

Controls 7/22/99 3:21 PM BRAHMS_03.dwg

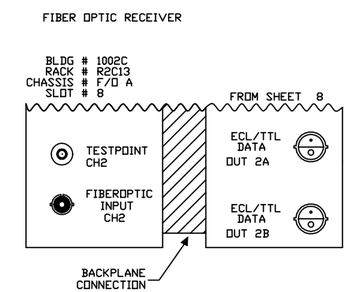

-3	-2	-1	REF DESIGNATOR	ITEM NO.	DESCRIPTION	MAT'L DWG NO.,BPM. NO.
QTY REQD						

INTERPRET IN GENERAL ACCORDANCE WITH ASME Y14.24M-1989

UNLESS OTHERWISE SPECIFIED DIMENSIONS ARE IN INCHES

DECIMAL TOLERANCES
.X ±.030
.XX ±.015
.XXX ±.005
ANGULAR TOLERANCE
± .5°

OUTSTANDING ECN

NA FINISH

BREAK SHARP EDGES
MAX. XX MIN. XX

Q.A. CATEGORY A-3		DATE
DRAWN BY	VENEGAS	7/22/99
CHECKED BY		
DESIGN APPROVAL		
ENGINEER APPROVAL	R. MICHNOFF	7/14/98
SUPVR. APPROVAL		

NEXT ASSEMBLY

BROOKHAVEN NATIONAL LABORATORY
UPTON, N.Y. 11973

RHIC CONTROLS WIRING DIAGRAM

BLDG. 1002C

SPARE F/O RCVR/XMIT CHANNELS

SIZE D | DRAWING NUMBER 94028XXX | REV. A

MATERIAL: ——— SCALE: NA WEIGHT: – SHEET 3 OF X

*AUTOCAD

REV.	ZONE	ECN NO.	DATE	BY	CKR	APP.

C-A, BNL 7/19/01 11:57 AM BRAHMS_04.dwg

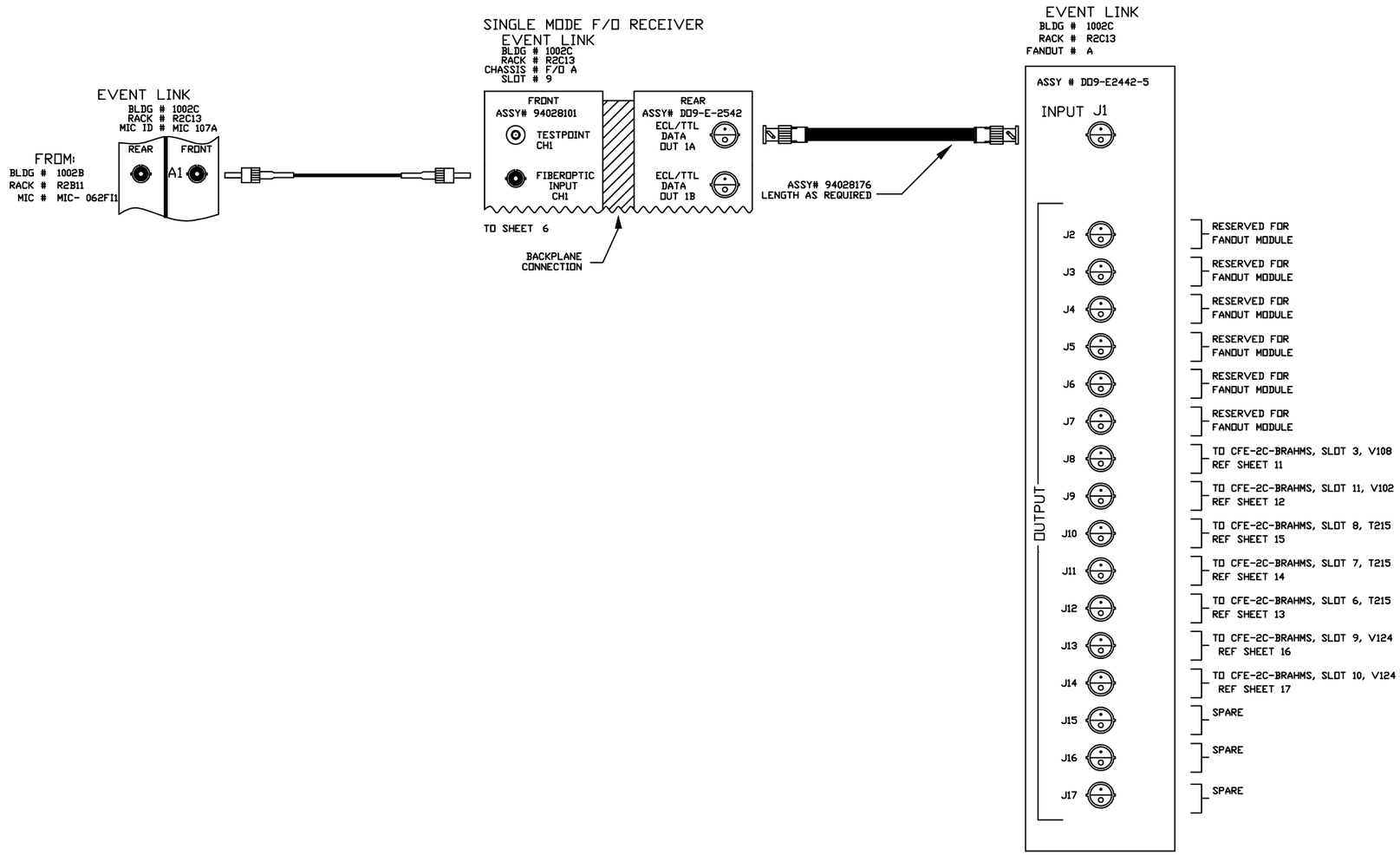

-3	-2	-1	REF DESIGNATOR	ITEM NO.	DESCRIPTION	MAT'L. DWG NO./INL NO.
QTY REQD						

INTERPRET IN GENERAL ACCORDANCE WITH ASME Y14.24M-1989

UNLESS OTHERWISE SPECIFIED DIMENSIONS ARE IN INCHES

DECIMAL TOLERANCES
.X ±.030
.XX ±.015
.XXX ±.005
ANGULAR TOLERANCE
± .5°

NA FINISH

BREAK SHARP EDGES
MAX. XX MIN. XX

OUTSTANDING ECN

Q.A. CATEGORY A-3		DATE
DRAWN BY	VENEGAS	7/21/99
CHECKED BY		
DESIGN APPROVAL		
ENGINEER APPROVAL	R. MICHNOFF	7/14/98
SUPVR. APPROVAL		

NEXT ASSEMBLY

BROOKHAVEN NATIONAL LABORATORY
UPTON, N.Y. 11973

RHIC CONTROLS WIRING DIAGRAM

BLDG. 1002C

EVENT LINK

SIZE D | DRAWING NUMBER 94028XXX | REV. A

MATERIAL: ——— SCALE: NA WEIGHT: – SHEET 4 OF X

*AUTOCAD

REV.	ZONE	ECN NO.	DATE	BY	CKR	APP.

Controls 7/26/99 9:45 AM BRAHMS_06.dwg

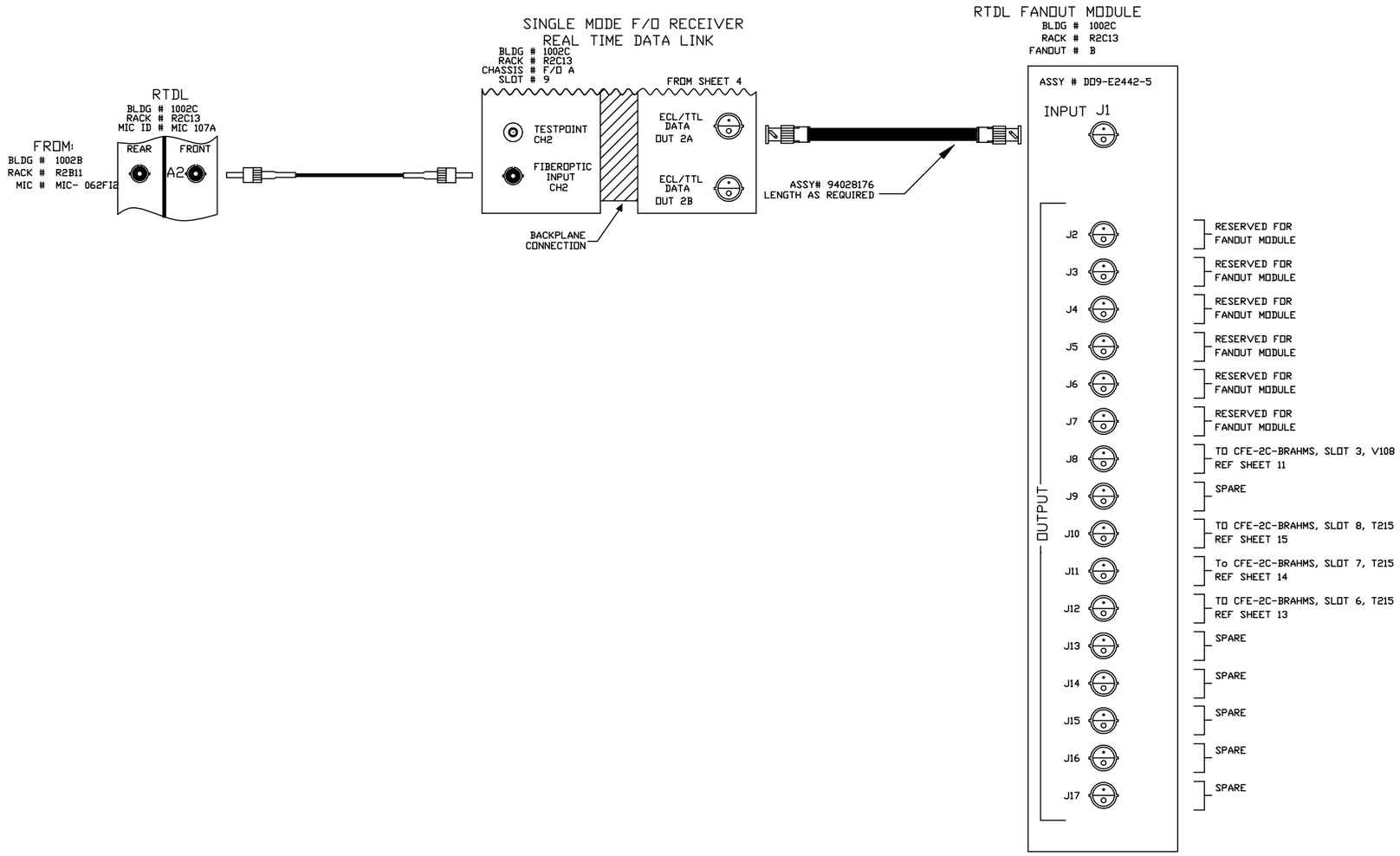

-3	-2	-1	REF DESIGNATOR	ITEM NO.	DESCRIPTION	MAT'L DWG NO.,SPEC NO.
QTY REQD						

INTERPRET IN GENERAL ACCORDANCE WITH ASME Y14.24M-1989

UNLESS OTHERWISE SPECIFIED DIMENSIONS ARE IN INCHES

DECIMAL TOLERANCES
.X ±.030
.XX ±.015
.XXX ±.005
ANGULAR TOLERANCE
± .5°

NA FINISH

BREAK SHARP EDGES
MAX. XX MIN. XX

OUTSTANDING ECN

Q.A. CATEGORY A-3		DATE
DRAWN BY	VENEGAS	7/23/99
CHECKED BY		
DESIGN APPROVAL		
ENGINEER APPROVAL	R. MICHNOFF	7/14/98
SUPVR. APPROVAL		

NEXT ASSEMBLY

BROOKHAVEN NATIONAL LABORATORY
UPTON, N.Y. 11973

RHIC CONTROLS WIRING DIAGRAM
BLDG. 1002C
REAL TIME DATA LINK

SIZE D | DRAWING NUMBER 94028XXX | REV. A

MATERIAL: ——— | SCALE: NA | WEIGHT: – | SHEET 6 OF X

*AUTOCAD

REV.	ZONE	ECN NO.	DATE	BY	CKR	APP.

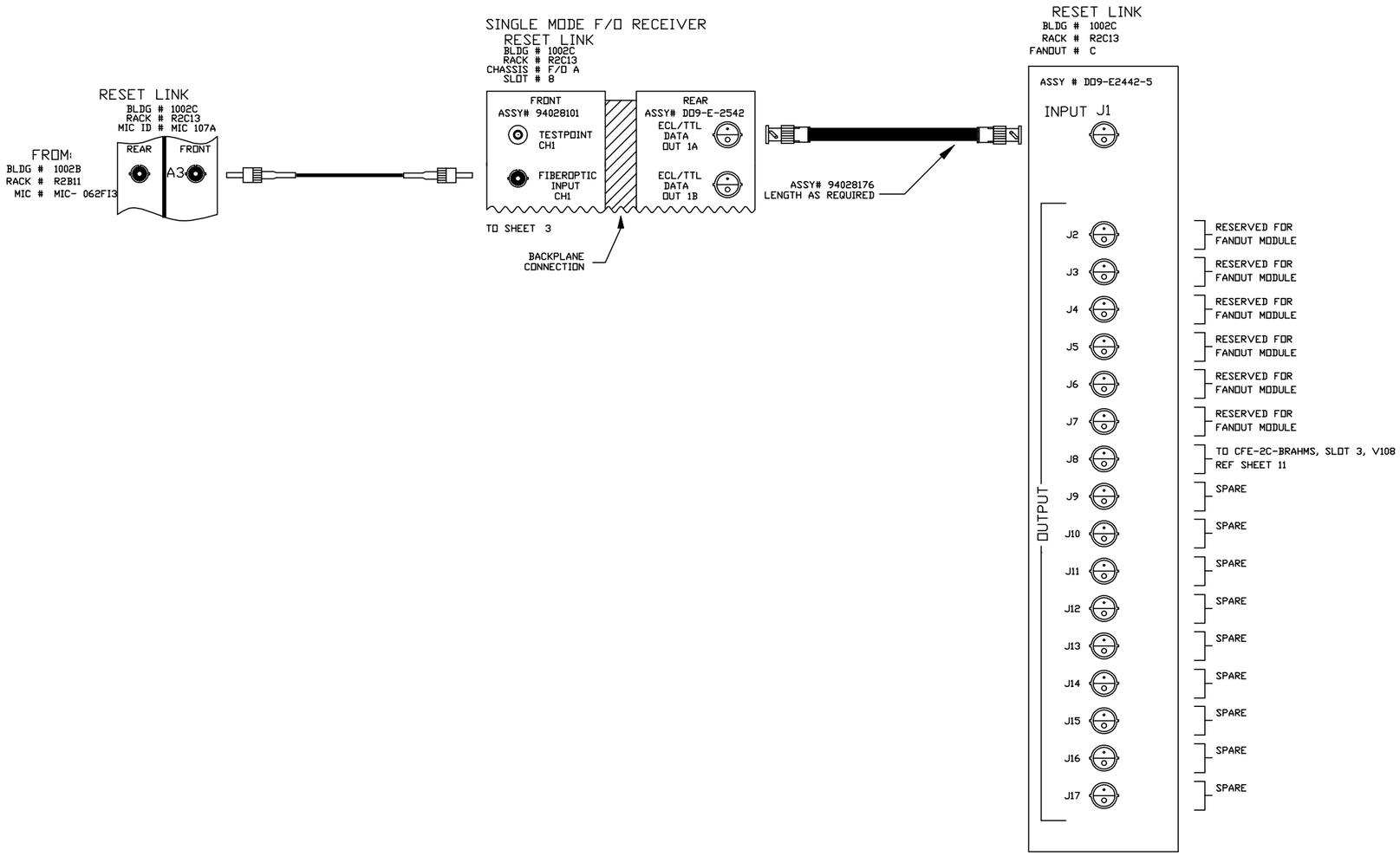

-3	-2	-1	REF DESIGNATOR	ITEM NO.	DESCRIPTION	MAT'L DWG NO.,BPNL NO.
QTY REQD						

INTERPRET IN GENERAL ACCORDANCE WITH ASME Y14.24M-1989

UNLESS OTHERWISE SPECIFIED DIMENSIONS ARE IN INCHES

DECIMAL TOLERANCES
.X ±.030
.XX ±.015
.XXX ±.005
ANGULAR TOLERANCE
± .5°

OUTSTANDING ECN

NA FINISH

BREAK SHARP EDGES
MAX. XX MIN. XX

Q.A. CATEGORY A-3		DATE
DRAWN BY	VENEGAS	7/23/99
CHECKED BY		
DESIGN APPROVAL		
ENGINEER APPROVAL	R. MICHNOFF	7/14/98
SUPVR. APPROVAL		

NEXT ASSEMBLY

BROOKHAVEN NATIONAL LABORATORY
UPTON, N.Y. 11973

RHIC CONTROLS WIRING DIAGRAM
BLDG. 1002C
RESET LINK

SIZE D | DRAWING NUMBER 94028XXX | REV. A

MATERIAL: ——— | SCALE: NA | WEIGHT: – | SHEET 8 OF X

*AUTOCAD

REV.	ZONE	ECN NO.	DATE	BY	CKR	APP.

Controls 7/26/99 9:47 AM BRAHMS_09.dwg

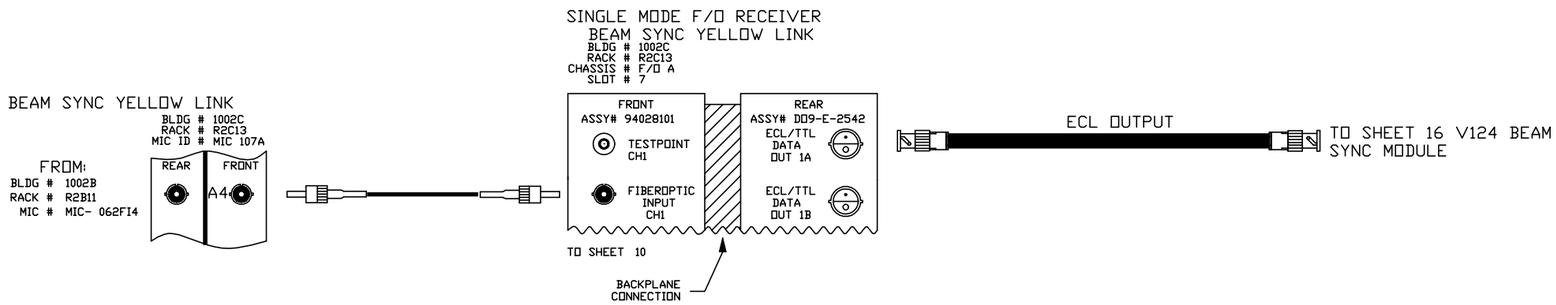

-3	-2	-1	REF DESIGNATOR	ITEM NO.	DESCRIPTION	MAT'L DWG NO.,BPM. NO.
QTY REQD						

INTERPRET IN GENERAL ACCORDANCE WITH ASME Y14.24M-1989

UNLESS OTHERWISE SPECIFIED DIMENSIONS ARE IN INCHES

DECIMAL TOLERANCES
.X ±.030
.XX ±.015
.XXX ±.005
ANGULAR TOLERANCE
± .5°

NA FINISH

BREAK SHARP EDGES
MAX. XX MIN. XX

OUTSTANDING ECN

Q.A. CATEGORY A-3		DATE	BROOKHAVEN NATIONAL LABORATORY
DRAWN BY	VENEGAS	7/22/99	UPTON, N.Y. 11973
CHECKED BY			RHIC CONTROLS WIRING DIAGRAM
DESIGN APPROVAL			BLDG. 1002C
ENGINEER APPROVAL	R. MICHNOFF	7/14/98	BEAM SYNC YELLOW LINK
SUPVR. APPROVAL			SIZE D — 94028XXX — REV. A
NEXT ASSEMBLY			DRAWING NUMBER

MATERIAL: ——— SCALE: NA WEIGHT: – SHEET 9 OF X

*AUTOCAD

REV.	ZONE	ECN NO.	DATE	BY	CKR	APP.

Controls 7/26/99 9:48 AM BRAHMS_10.dwg

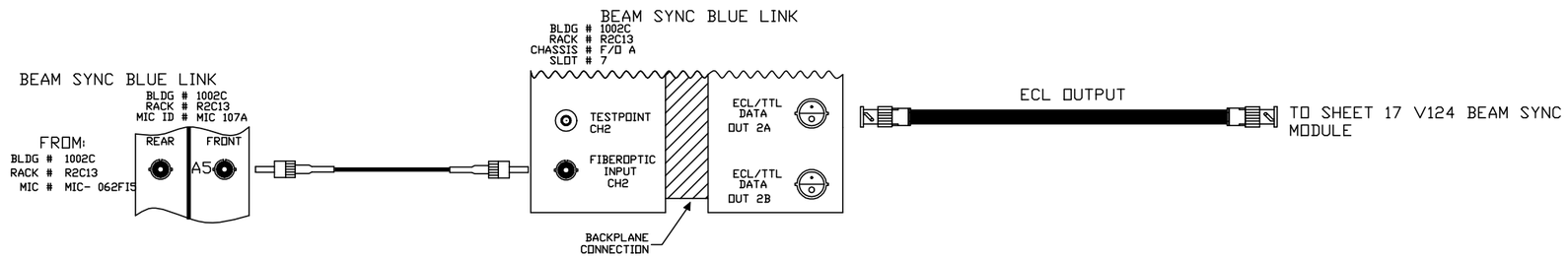

-3	-2	-1	REF DESIGNATOR	ITEM NO.	DESCRIPTION	MAT'L DWG NO.,BNL NO.
QTY REQD						

INTERPRET IN GENERAL ACCORDANCE WITH ASME Y14.24M-1989

UNLESS OTHERWISE SPECIFIED DIMENSIONS ARE IN INCHES

DECIMAL TOLERANCES
.X ±.030
.XX ±.015
.XXX ±.005
ANGULAR TOLERANCE
± .5°

NA FINISH

BREAK SHARP EDGES
MAX. XX MIN. XX

OUTSTANDING ECN

Q.A. CATEGORY A-3		DATE
DRAWN BY	VENEGAS	7/23/99
CHECKED BY		
DESIGN APPROVAL		
ENGINEER APPROVAL	R. MICHNOFF	7/14/98
SUPVR. APPROVAL		
NEXT ASSEMBLY		

BROOKHAVEN NATIONAL LABORATORY
UPTON, N.Y. 11973

RHIC CONTROLS WIRING DIAGRAM

BLDG. 1002C

BEAM SYNC BLUE LINK

SIZE D | DRAWING NUMBER 94028XXX | REV. A

MATERIAL: ——— | SCALE: NA | WEIGHT: – | SHEET 10 OF X

*AUTOCAD

REV.	ZONE	ECN NO.	DATE	BY	CKR	APP.

C-A, BNL 7/19/01 12:01 PM BRAHMS_11.dwg

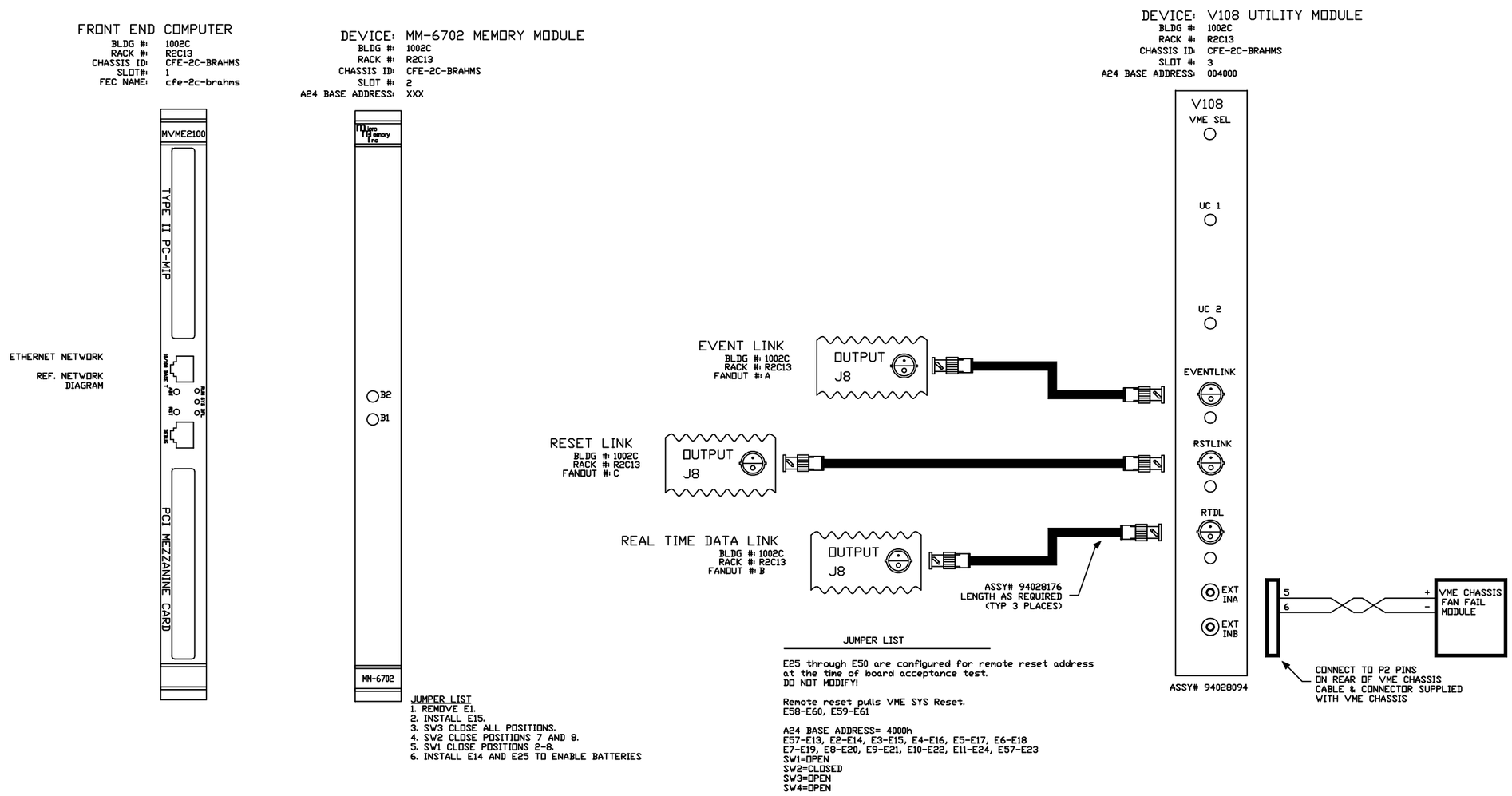

-3	-2	-1	REF DESIGNATOR	ITEM NO.	DESCRIPTION	MAT'L DWG NO.,BNL NO.
QTY REQD						

INTERPRET IN GENERAL ACCORDANCE WITH ASME Y14.24M-1989

UNLESS OTHERWISE SPECIFIED DIMENSIONS ARE IN INCHES

DECIMAL TOLERANCES
.X ±.030
.XX ±.015
.XXX ±.005
ANGULAR TOLERANCE
± .5°

NA FINISH

BREAK SHARP EDGES
MAX. XX MIN. XX

OUTSTANDING ECN

Q.A. CATEGORY A-3	DATE	
DRAWN BY VENEGAS	7/23/99	
CHECKED BY		
DESIGN APPROVAL		
ENGINEER APPROVAL R. MICHNOFF	7/15/98	
SUPVR. APPROVAL		
NEXT ASSEMBLY		

BROOKHAVEN NATIONAL LABORATORY
UPTON, N.Y. 11973

RHIC CONTROLS WIRING DIAGRAM

BLDG. 1002C, VME CHASSIS CFE-2C-BRAHMS

FT END COMP/V108 UTIL MODULE

SIZE D | DRAWING NUMBER 94028XXX | REV. A

MATERIAL: ——— SCALE: NA WEIGHT: – SHEET 11 OF X

*AUTOCAD

REV.	ZONE	ECN NO.	DATE	BY	CKR	APP.

Controls 7/23/99 10:02 AM BRAHMS_12.dwg

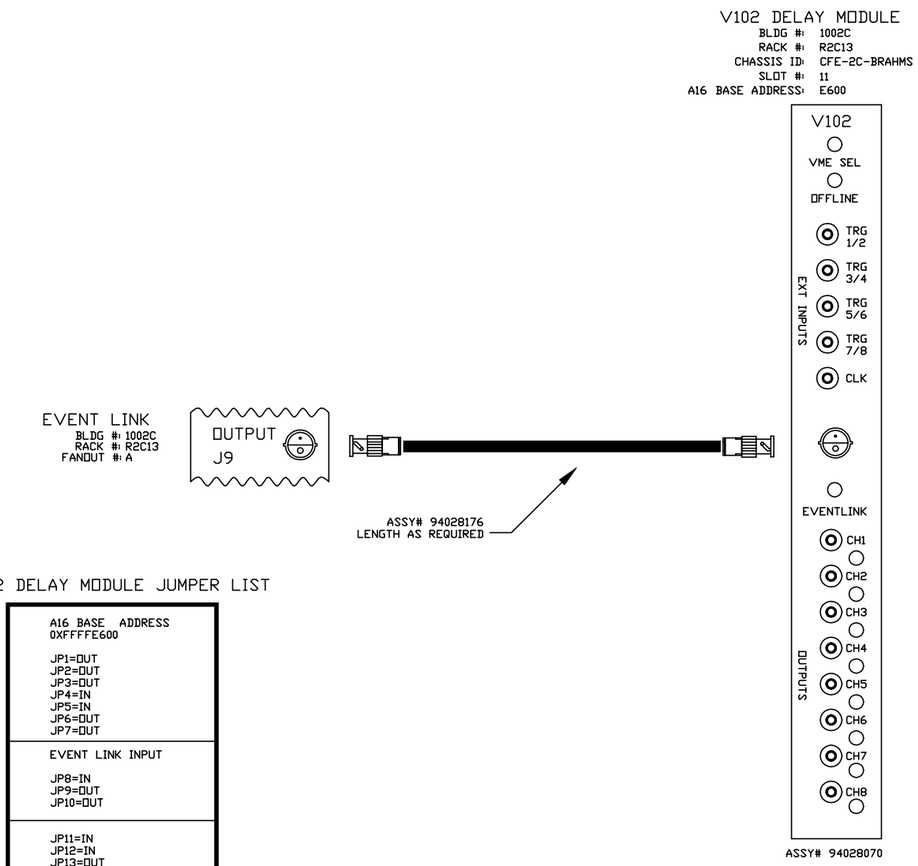

V102 DELAY MODULE JUMPER LIST

A16 BASE ADDRESS 0XFFFFE600 JP1=OUT JP2=OUT JP3=OUT JP4=IN JP5=IN JP6=OUT JP7=OUT
EVENT LINK INPUT JP8=IN JP9=OUT JP10=OUT
JP11=IN JP12=IN JP13=OUT JP14=IN

-3	-2	-1	REF DESIGNATOR	ITEM NO.	DESCRIPTION	MAT'L DWG NO.,BNL NO.
QTY REQD						

INTERPRET IN GENERAL ACCORDANCE WITH ASME Y14.24M-1989

UNLESS OTHERWISE SPECIFIED DIMENSIONS ARE IN INCHES

DECIMAL TOLERANCES
.X ±.030
.XX ±.015
.XXX ±.005
ANGULAR TOLERANCE
± .5°

OUTSTANDING ECN

NA FINISH

BREAK SHARP EDGES
MAX. XX MIN. XX

Q.A. CATEGORY A-3		DATE
DRAWN BY	VENEGAS	7/23/99
CHECKED BY		
DESIGN APPROVAL		
ENGINEER APPROVAL	R. MICHNOFF	7/21/98/99
SUPVR. APPROVAL		

NEXT ASSEMBLY

BROOKHAVEN NATIONAL LABORATORY
UPTON, N.Y. 11973

RHIC CONTROLS WIRING DIAGRAM

BLDG. 1002C CHASSIS CFE-2C-BRAHMS

V102 DELAY MODULE

SIZE D | DRAWING NUMBER 94028XXX | REV. A

MATERIAL: ——— SCALE: NA WEIGHT: – SHEET 12 OF X

*AUTOCAD

REV.	ZONE	ECN NO.	DATE	BY	CKR	APP.

Controls 7/23/99 10:23 AM BRAHMS_13.dwg

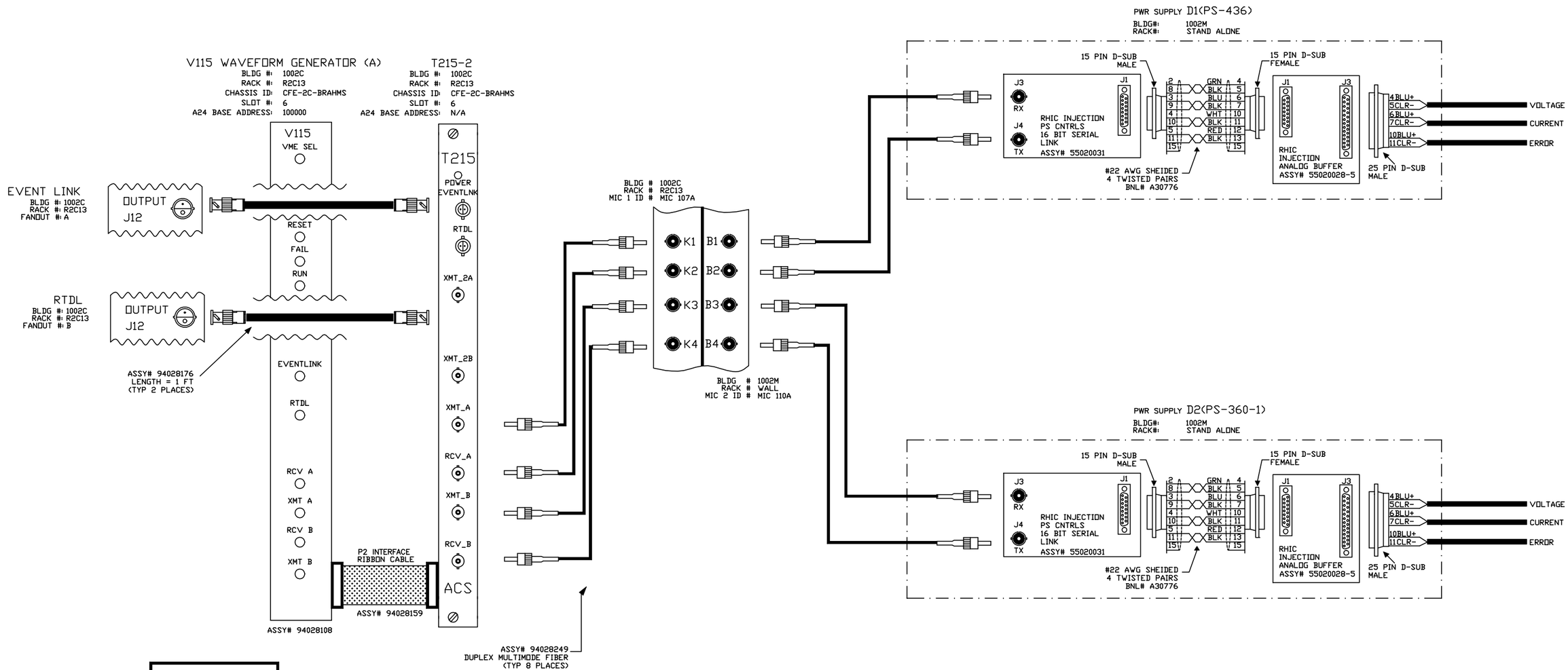

V115 JUMPER LIST
JP3=IN JP4=IN JP1=OUT JP2=OUT
A24 BASE ADDRESS JB1-A23=IN JB1-A22=IN JB1-A21=IN JB1-A20=OUT JB1-A19=IN JB1-A18=IN

-3	-2	-1	REF DESIGNATOR	ITEM NO.	DESCRIPTION	MAT'L DWG NO.,BNL NO.
QTY REQD						

INTERPRET IN GENERAL ACCORDANCE WITH ASME Y14.24M-1989

UNLESS OTHERWISE SPECIFIED DIMENSIONS ARE IN INCHES

DECIMAL TOLERANCES
.X ±.030
.XX ±.015
.XXX ±.005
ANGULAR TOLERANCE
± .5°

NA FINISH

BREAK SHARP EDGES
MAX. XX MIN. XX

OUTSTANDING ECN

Q.A. CATEGORY A-3		DATE
DRAWN BY	VENEGAS	7/23/99
CHECKED BY		
DESIGN APPROVAL		
ENGINEER APPROVAL	R. MICHNOFF	7/15/98
SUPVR. APPROVAL		

NEXT ASSEMBLY

BROOKHAVEN NATIONAL LABORATORY
UPTON, N.Y. 11973

RHIC CONTROLS WIRING DIAGRAM
BLDG. 1002C, CFE-2C-BRAHMS
PWR SUPPLY D1 AND D2

SIZE D | DRAWING NUMBER 94028XXX | REV. A

MATERIAL: ——— SCALE: NA WEIGHT: – SHEET 13 OF X

*AUTOCAD

REV.	ZONE	ECN NO.	DATE	BY	CKR	APP.

Controls 7/26/99 9:50 AM BRAHMS_14.dwg

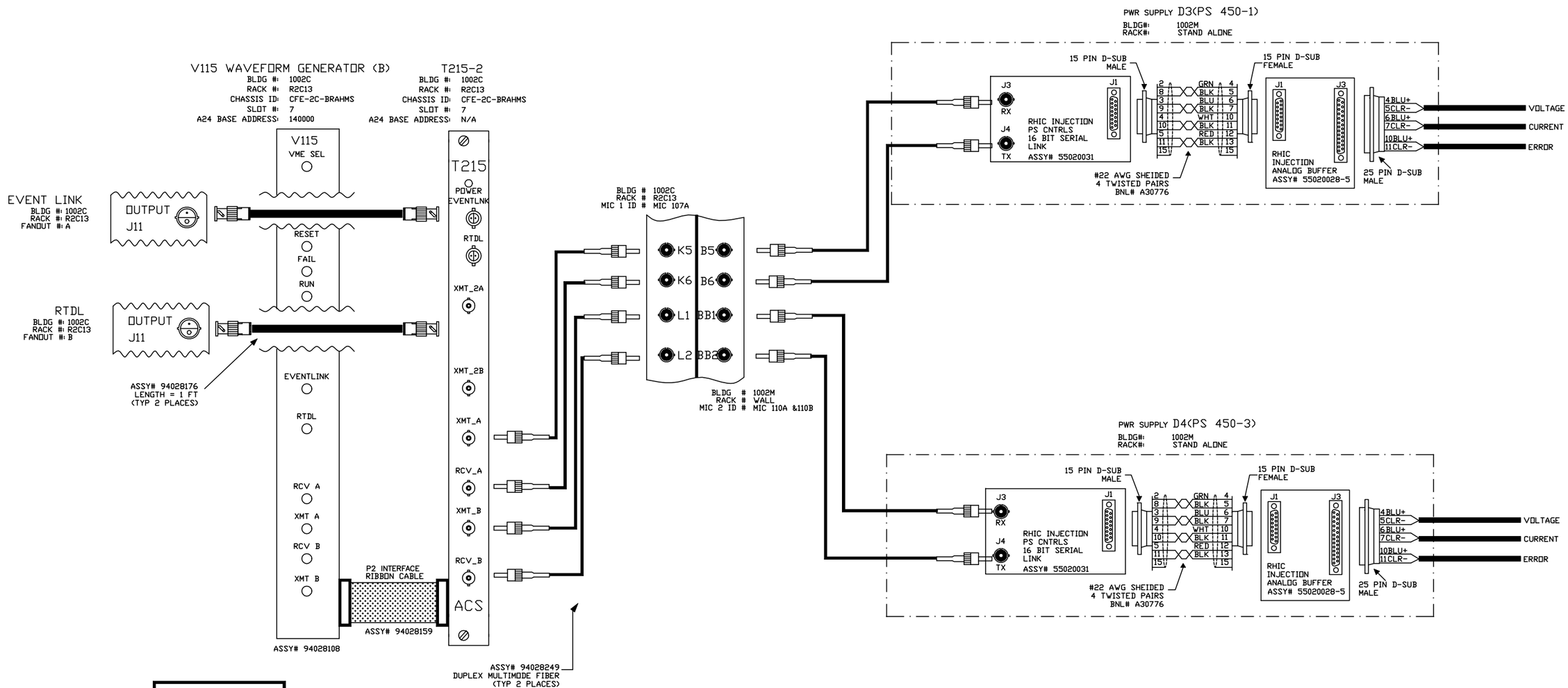

V115 JUMPER LIST
JP3=IN JP4=IN JP1=OUT JP2=OUT
A24 BASE ADDRESS JB1-A23=IN JB1-A22=IN JB1-A21=IN JB1-A20=OUT JB1-A19=IN JB1-A18=OUT

-3	-2	-1	REF DESIGNATOR	ITEM NO.	DESCRIPTION	MAT'L DWG NO.,BNL NO.
QTY REQD						

INTERPRET IN GENERAL ACCORDANCE WITH ASME Y14.24M-1989

UNLESS OTHERWISE SPECIFIED DIMENSIONS ARE IN INCHES

DECIMAL TOLERANCES
.X ±.030
.XX ±.015
.XXX ±.005
ANGULAR TOLERANCE
± .5°

NA FINISH

BREAK SHARP EDGES
MAX. XX MIN. XX

OUTSTANDING ECN

Q.A. CATEGORY A-3		DATE
DRAWN BY	VENEGAS	7/21/99
CHECKED BY		
DESIGN APPROVAL		
ENGINEER APPROVAL	R. MICHNOFF	7/15/98
SUPVR. APPROVAL		

NEXT ASSEMBLY

BROOKHAVEN NATIONAL LABORATORY
UPTON, N.Y. 11973

RHIC CONTROLS WIRING DIAGRAM
BLDG. 1006A, CFE-6A-STAR
PWR SUPPLY D3 AND D4

SIZE D | DRAWING NUMBER 94028XXX | REV. A

MATERIAL: ——— SCALE: NA WEIGHT: – SHEET 14 OF X

*AUTOCAD

REV.	ZONE	ECN NO.	DATE	BY	CKR	APP.

Controls 7/26/99 9:51 AM BRAHMS_15.dwg

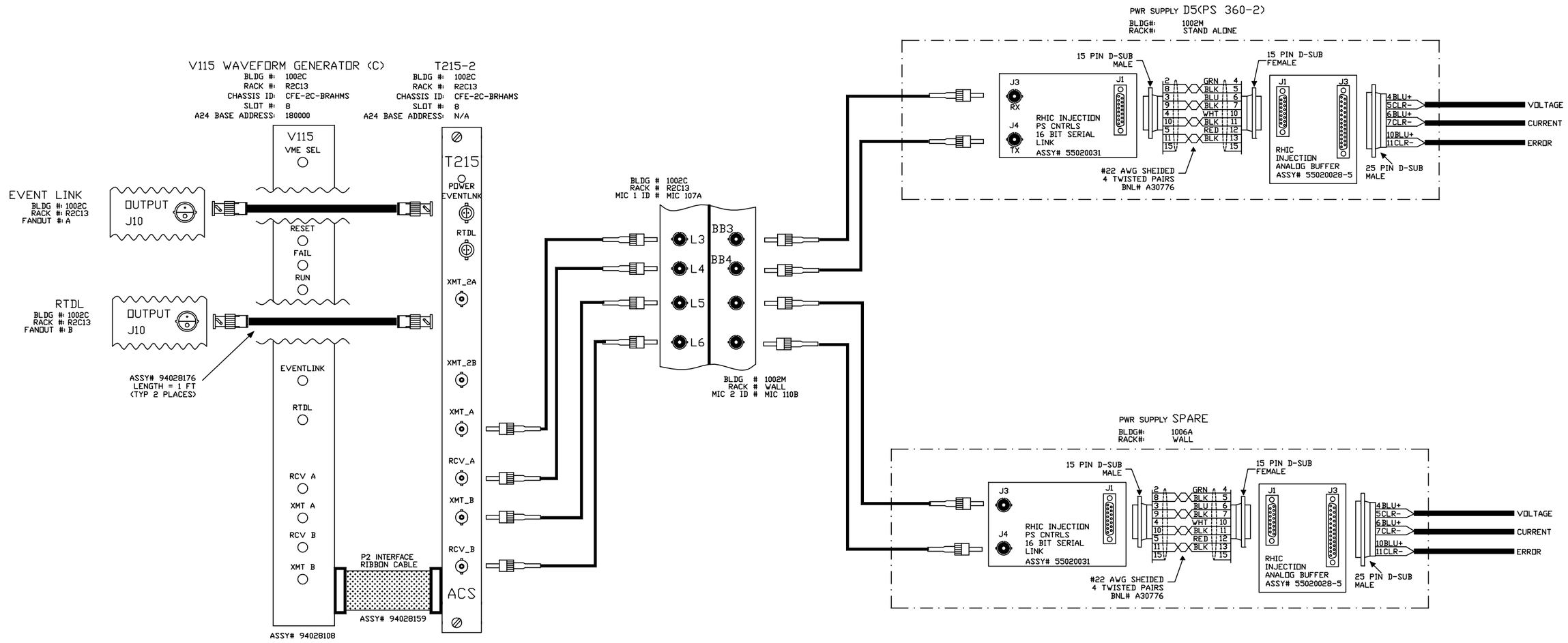

V115 JUMPER LIST
JP3=IN JP4=IN JP1=OUT JP2=OUT
A24 BASE ADDRESS JB1-A23=IN JB1-A22=IN JB1-A21=IN JB1-A20=OUT JB1-A19=OUT JB1-A18=IN

-3	-2	-1	REF DESIGNATOR	ITEM NO.	DESCRIPTION	MAT'L DWG NO.,BNL NO.
QTY REQD						

INTERPRET IN GENERAL ACCORDANCE WITH ASME Y14.24M-1989

UNLESS OTHERWISE SPECIFIED DIMENSIONS ARE IN INCHES

DECIMAL TOLERANCES
.X ±.030
.XX ±.015
.XXX ±.005
ANGULAR TOLERANCE
± .5°

NA FINISH

BREAK SHARP EDGES
MAX. XX MIN. XX

OUTSTANDING ECN

Q.A. CATEGORY A-3		DATE
DRAWN BY	VENEGAS	7/23/99
CHECKED BY		
DESIGN APPROVAL		
ENGINEER APPROVAL	R. MICHNOFF	7/15/98
SUPVR. APPROVAL		
NEXT ASSEMBLY		

BROOKHAVEN NATIONAL LABORATORY
UPTON, N.Y. 11973

RHIC CONTROLS WIRING DIAGRAM

BLDG. 1002C, CFE-2C-BRAHMS

PWR SUPPLY D5

SIZE D

DRAWING NUMBER 94028XXX

REV. A

MATERIAL: ——— SCALE: NA WEIGHT: — SHEET 15 OF X

*AUTOCAD

REV.	ZONE	ECN NO.	DATE	BY	CKR	APP.

C-A, BNL 6/27/01 2:01 PM BRAHMS_16.dwg

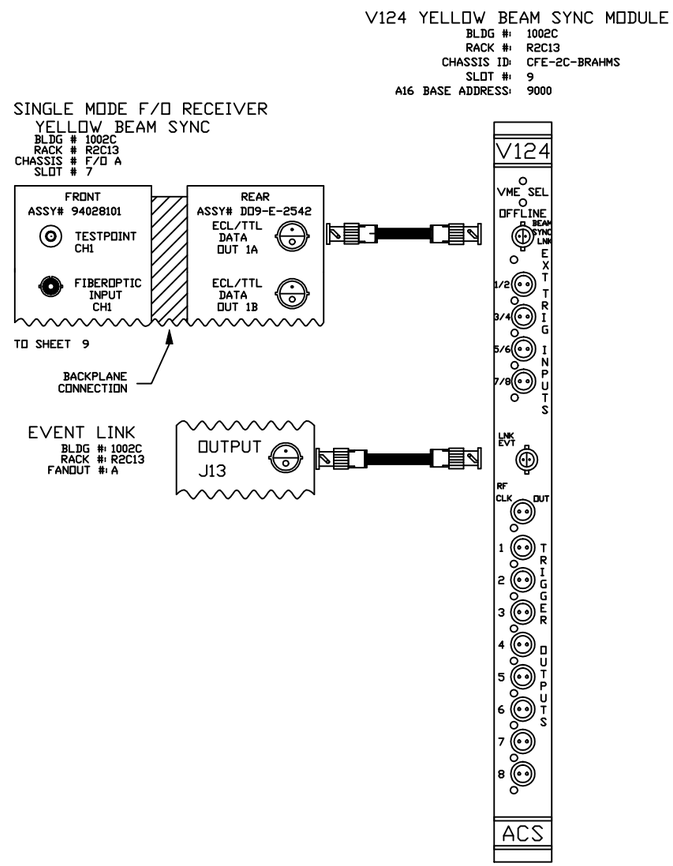

JUMPER LIST
JP1=OUT
JP27=IN
JP28=IN
JP29=OUT
JP5=IN

-3	-2	-1	REF DESIGNATOR	ITEM NO.	DESCRIPTION	MAT'L DWG NO.,BNL NO.
QTY REQD						

INTERPRET IN GENERAL ACCORDANCE WITH ASME Y14.24M-1989

UNLESS OTHERWISE SPECIFIED DIMENSIONS ARE IN INCHES

DECIMAL TOLERANCES
.X ±.030
.XX ±.015
.XXX ±.005
ANGULAR TOLERANCE
± .5°

OUTSTANDING ECN

NA FINISH

BREAK SHARP EDGES
MAX. XX MIN. XX

Q.A. CATEGORY A-3		DATE	BROOKHAVEN NATIONAL LABORATORY
DRAWN BY	VENEGAS	7/23/99	UPTON, N.Y. 11973
CHECKED BY			RHIC CONTROLS WIRING DIAGRAM
DESIGN APPROVAL			BLDG. 1002C CHASSIS CFE-2C-BRAHMS
ENGINEER APPROVAL	R. MICHNOFF	7/27/98	V124 BEAM SYNC MODULE
SUPVR. APPROVAL			SIZE D — 94028XXX — REV. A
NEXT ASSEMBLY			DRAWING NUMBER

MATERIAL: ——— SCALE: NA WEIGHT: – SHEET 16 OF X

*AUTOCAD

REV.	ZONE	ECN NO.	DATE	BY	CKR	APP.

C-A, BNL 6/27/01 2:19 PM BRAHMS_17.dwg

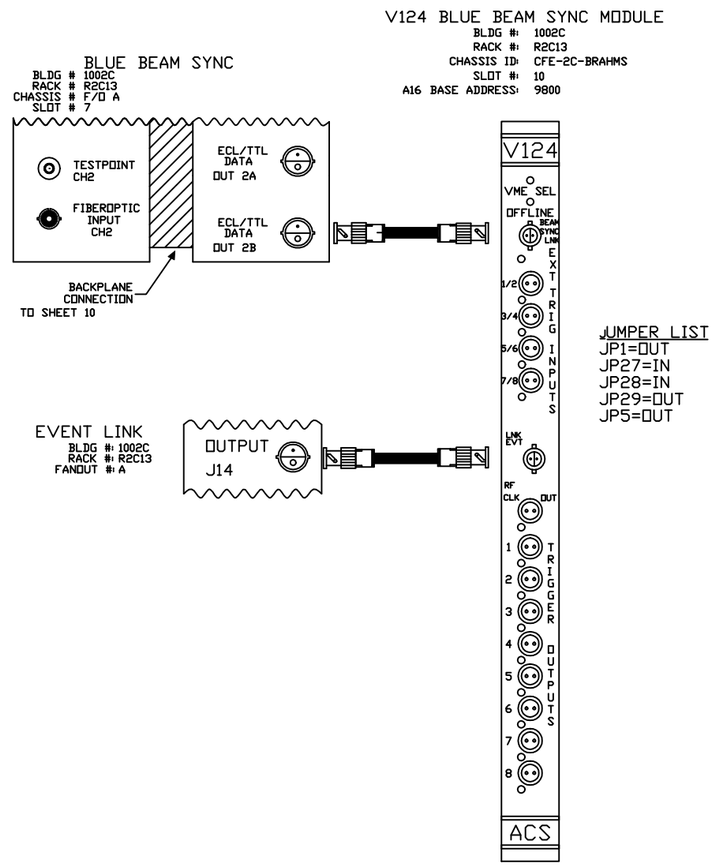

JUMPER LIST
JP1=OUT
JP27=IN
JP28=IN
JP29=OUT
JP5=OUT

-3	-2	-1	REF DESIGNATOR	ITEM NO.	DESCRIPTION	MAT'L DWG NO.,BNL NO.
QTY REQD						

INTERPRET IN GENERAL ACCORDANCE WITH ASME Y14.24M-1989

UNLESS OTHERWISE SPECIFIED DIMENSIONS ARE IN INCHES

DECIMAL TOLERANCES
.X ±.030
.XX ±.015
.XXX ±.005
ANGULAR TOLERANCE ± .5°

OUTSTANDING ECN

NA FINISH

BREAK SHARP EDGES MAX. XX MIN. XX

Q.A. CATEGORY A-3		DATE
DRAWN BY	VENEGAS	7/23/99
CHECKED BY		
DESIGN APPROVAL		
ENGINEER APPROVAL	R. MICHNOFF	7/27/98
SUPVR. APPROVAL		

NEXT ASSEMBLY

BROOKHAVEN NATIONAL LABORATORY
UPTON, N.Y. 11973

RHIC CONTROLS WIRING DIAGRAM

BLDG. 1002C CHASSIS CFE-2C-BRAHMS

V124 BEAM SYNC MODULE

SIZE D | DRAWING NUMBER 94028XXX | REV. A

MATERIAL: ——— SCALE: NA WEIGHT: – SHEET 17 OF X

*AUTOCAD

REV.	ZONE	ECN NO.	DATE	BY	CKR	APP.

C-A, BNL 5/15/01 10:49 AM BRAHMS_18.dwg

-3	-2	-1	REF DESIGNATOR	ITEM NO.	DESCRIPTION	MAT'L. DWG NO.,BNL NO.
QTY REQD						

INTERPRET IN GENERAL ACCORDANCE WITH ASME Y14.24M-1989

UNLESS OTHERWISE SPECIFIED DIMENSIONS ARE IN INCHES

DECIMAL TOLERANCES
.X ±.030
.XX ±.015
.XXX ±.005
ANGULAR TOLERANCE
± .5°

NA FINISH

BREAK SHARP EDGES
MAX. XX MIN. XX

OUTSTANDING ECN

Q.A. CATEGORY A-3		DATE
DRAWN BY	VENEGAS	7/23/99
CHECKED BY		
DESIGN APPROVAL		
ENGINEER APPROVAL	R. MICHNOFF	1/13/99
SUPVR. APPROVAL		
NEXT ASSEMBLY		

BROOKHAVEN NATIONAL LABORATORY
UPTON, N.Y. 11973

RHIC CONTROLS WIRING DIAGRAM

BLDG. 1002C, CHASSIS CFE-2C-BRAHMS

SIZE D | DRAWING NUMBER 94028XXX | REV. A

MATERIAL: ——— SCALE: NA WEIGHT: – SHEET 18

*AUTOCAD

REV.	ZONE	ECN NO.	DATE	BY	CKR	APP.

C-A, BNL 5/15/01 10:50 AM BRAHMS_19.dwg

-3	-2	-1	REF DESIGNATOR	ITEM NO.	DESCRIPTION	MAT'L. DWG NO.,BNL NO.
QTY REQD						

INTERPRET IN GENERAL ACCORDANCE WITH ASME Y14.24M-1989

UNLESS OTHERWISE SPECIFIED DIMENSIONS ARE IN INCHES

DECIMAL TOLERANCES
.X ±.030
.XX ±.015
.XXX ±.005
ANGULAR TOLERANCE
± .5°

NA FINISH

BREAK SHARP EDGES
MAX. XX MIN. XX

OUTSTANDING ECN

Q.A. CATEGORY A-3		DATE
DRAWN BY	VENEGAS	7/23/99
CHECKED BY		
DESIGN APPROVAL		
ENGINEER APPROVAL	R. MICHNOFF	1/13/99
SUPVR. APPROVAL		
NEXT ASSEMBLY		

BROOKHAVEN NATIONAL LABORATORY
UPTON, N.Y. 11973

RHIC CONTROLS WIRING DIAGRAM
BLDG. 1002C RACK R2C13

SIZE D | DRAWING NUMBER 94028XXX | REV. A

MATERIAL: ——— SCALE: NA WEIGHT: – SHEET 19

*AUTOCAD

REV.	ZONE	ECN NO.	DATE	BY	CKR	APP.

Controls 7/28/99 10:14 AM BRAHMS_20.dwg

SIS3803 SCALER
BLDG #: 1002C
RACK #: R2C13
CHASSIS ID: CFE-2C-BRAHMS
SLOT #: 19
A32 BASE ADDRESS: 0X8383800

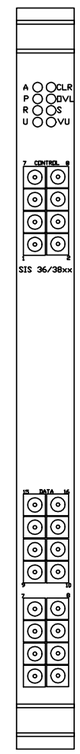

BOARD ADDRESS JUMPERS

EN_A16: OUT
EN_A24: OUT
EN_132: IN

SW_A32UI: 0
SW_A32L: 8
SW_A24U: 3
SW_A24L: 8
SW_A16U: 3 (IF MORE BD'S INSTALLED SW_A16U WILL BE 4,5,6 ETC)

J_ALL: IN

-3	-2	-1	REF DESIGNATOR	ITEM NO.	DESCRIPTION	MAT'L DWG NO.,SPNL NO.
QTY REQD						

INTERPRET IN GENERAL ACCORDANCE WITH ASME Y14.24M-1989
UNLESS OTHERWISE SPECIFIED DIMENSIONS ARE IN INCHES
DECIMAL TOLERANCES .X ±.030 .XX ±.015 .XXX ±.005
ANGULAR TOLERANCE ± .5°
NA FINISH
BREAK SHARP EDGES MAX. XX MIN. XX
OUTSTANDING ECN

Q.A. CATEGORY A-3		DATE
DRAWN BY	VENEGAS	7/28/99
CHECKED BY		
DESIGN APPROVAL		
ENGINEER APPROVAL	R. MICHNOFF	1/11/99
SUPVR. APPROVAL		
NEXT ASSEMBLY		

BROOKHAVEN NATIONAL LABORATORY
UPTON, N.Y. 11973
RHIC CONTROLS WIRING DIAGRAM
BLDG. 1002C
SIS3803 VME SCALER

SIZE D | DRAWING NUMBER 94028XXX | REV. A

MATERIAL: ——— SCALE: NA WEIGHT: – SHEET 20 OF X

*AUTOCAD

A&B PROGRAMMABLE CONTROLLER

BLDG #: 1002C
RACK #: R2C13
CHASSIS ID: CFE-2C-BRAHMS
SLOT #: 4 & 5
A16 BASE ADDRESS: FC00

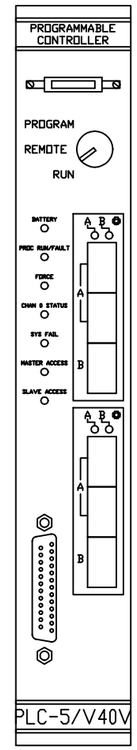

SWITCH SETTING FOR BOARD

SW 1
1. DH+ STATION NUMBER: POSITION 1-6 DOWN. (ON)
2. POWER UP TEST: POSITION 7 DOWN (ON).
3. MEMORY PROTECT: POSITION 8 DOWN (ON).

SW 2
1. A16 ADDRESS: POSITION 1-3 DOWN (ON).
2. SYSTEM CONTROLLER: POSITION 4 UP (OFF).
3. REQUEST LEVEL: POSITON 6 DOWN (ON).
4. UNUSED: POSITIONS 5,7 AND 8 UP (OFF).

-3	-2	-1	REF DESIGNATOR	ITEM NO.	DESCRIPTION	MAT'L DWG NO.,BNL NO.
QTY REQD						

INTERPRET IN GENERAL ACCORDANCE WITH ASME Y14.24M-1989
UNLESS OTHERWISE SPECIFIED DIMENSIONS ARE IN INCHES
DECIMAL TOLERANCES
.X ±.030
.XX ±.015
.XXX ±.005
ANGULAR TOLERANCE ± .5°
NA FINISH
BREAK SHARP EDGES
MAX. XX MIN. XX
OUTSTANDING ECN

Q.A. CATEGORY A-3		DATE
DRAWN BY	VENEGAS	7/22/99
CHECKED BY		
DESIGN APPROVAL		
ENGINEER APPROVAL	R. MICHNOFF	7/14/98
SUPVR. APPROVAL		
NEXT ASSEMBLY		

BROOKHAVEN NATIONAL LABORATORY
UPTON, N.Y. 11973
RHIC CONTROLS WIRING DIAGRAM
BLDG. 1002C
A&B PROGRAMMABLE CONTROLLER

SIZE D
DRAWING NUMBER PLC-5/V40B
REV. A
MATERIAL: ——— SCALE: NA WEIGHT: – SHEET 21 OF X

*AUTOCAD

REV.	ZONE	ECN NO.	DATE	BY	CKR	APP.

Controls 7/28/99 2:12 PM BRAHMS_22.dwg

VMIVME BIT 3 (MASTER)
BLDG #: 1002C
RACK #: R2C13
CHASSIS ID: CFE-2C-BRAHMS
SLOT #: 21
XX BASE ADDRESS: XXX

VMIVME BIT 3 (SLAVE)
BLDG #: 1002C
RACK #: R2C13
CHASSIS ID: ZDC HV POWER SUPPLY
SLOT #: XXX
XX BASE ADDRESS: XXX

JUMPER SETTING FOR MASTER

1. P/S JUMPER ON (PRIMARY MODULE).
2. C/S JUMPER ON OFF (NO REGISTER REQUIRED).
3. SYS JUMPER HAS NO EFFECT ON PRIMARY.

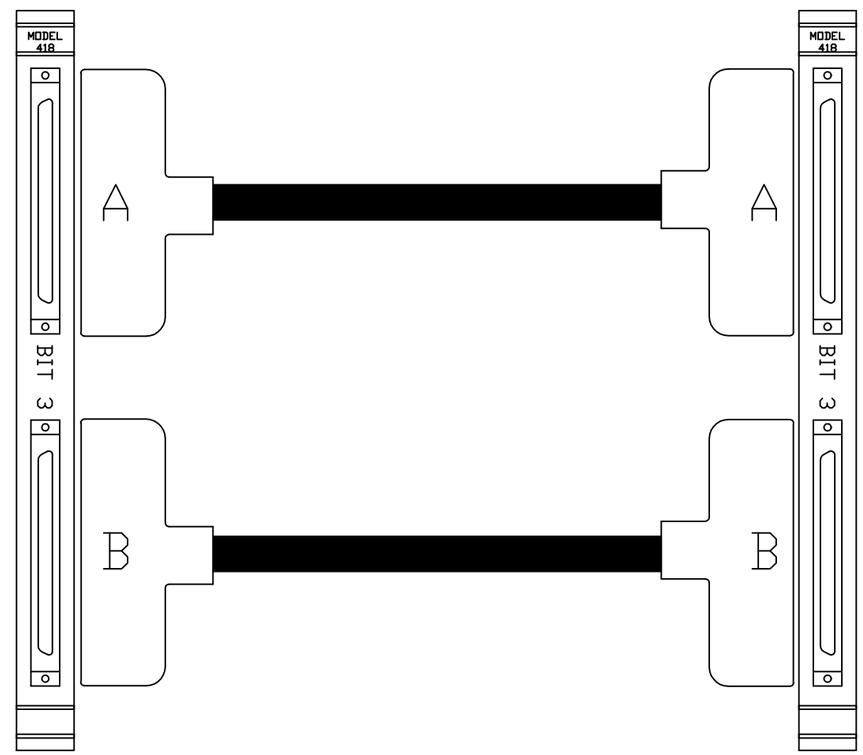

JUMPER SETTING FOR SLAVE

1. P/S JUMPER OFF (SECONDARY MODULE).
2. C/S JUMPER OFF (NO REGISTER REQUIRED).
3. SYS JUMPER ON (DON'T PASS SYSFAIL TO PRI REPEATER ON INITIALIZATION.

-3	-2	-1	REF DESIGNATOR	ITEM NO.	DESCRIPTION	MAT'L DWG NO./INL NO.
QTY REQD						

INTERPRET IN GENERAL ACCORDANCE WITH ASME Y14.24M-1989

UNLESS OTHERWISE SPECIFIED DIMENSIONS ARE IN INCHES

DECIMAL TOLERANCES
.X ±.030
.XX ±.015
.XXX ±.005
ANGULAR TOLERANCE
± .5°

NA FINISH

BREAK SHARP EDGES
MAX. XX MIN. XX

OUTSTANDING ECN

Q.A. CATEGORY A-3		DATE
DRAWN BY	VENEGAS	7/28/99
CHECKED BY		
DESIGN APPROVAL		
ENGINEER APPROVAL	R. MICHNOFF	7/27/98
SUPVR. APPROVAL		

NEXT ASSEMBLY

BROOKHAVEN NATIONAL LABORATORY
UPTON, N.Y. 11973

RHIC CONTROLS WIRING DIAGRAM

BLDG. 1002C

VMIVME BIT 3

SIZE D | DRAWING NUMBER 94028XXX | REV. A

MATERIAL: ——— SCALE: NA WEIGHT: – SHEET 22 OF X

*AUTOCAD