RHIC Accelerator Controls Section
Bldg. A-TRAILER Wiring Diagrams
BNL Drawing Number 94028758

Brookhaven National Laboratory, Upton, New York 11973

Created By: Ed Koropsak
Last Updated 4/10//99

Power Distribution
- Rack ATRL-4, ATRL-5 (Sheet 1)

SPARES
- MADC Channels (Sheet 3)
- F/O Channels (Sheet 3)

Serial Links
- Event Link (Sheet 4,5)
- Real Time Data Link (RTDL) (Sheet 6,7)
- Reset Link (Sheet 8)
- Beam Sync Yellow Link (Sheet 9)
- Beam Sync Blue Link (Sheet 10)

VME Chassis CFE-AT-PS1 modules
- Front End Computer, V108 Utility Module (Sheet 11)
- V113/V114 MADC System (Sheet 12)
- ALLEN BRADLEY PLC System (Sheet 26)
- OMS MOTOR CONTROLLER (Sheet 27)

VME Chassis CFE-AT-PS2 modules
- Front End Computer, V108 Utility Module (Sheet 13)
- V115 WFG A: PSUQ1, PSUQ5 (Sheet 14)
- V115 WFG B: PSUQ6, PSUQ7 (Sheet 15)
- V115 WFG C: PSUQ8, PSUQ9 (Sheet 16)
- V115 WFG D: PSUQ10, PSUQ11 (Sheet 17)
- V115 WFG E: PSUQ12, PSUQ13 (Sheet 18)
- V115 WFG F: PSUTH2, PSUTH3 (Sheet 19)
- V115 WFG G: PSUTH6, PSUTV1 (Sheet 20)
- V115 WFG H: PSUTV4, PSUTV5 (Sheet 21)
- V115 WFG I: PSUARC8, PSUTV7 (Sheet 22)
- V115 WFG J: PSUQ2, PSUQ3 (Sheet 23)
- V115 WFG K: PSUARC4, PSUQ4 (Sheet 24)
- V115 WFG L: PSUTH2.1, PSUTH2.2 (Sheet 25)
- V120 PERMIT SYSTEM INTERFACE B (Sheet 28)

VME Chassis CFE-AT-INST modules
- Front End Computer, V108 Utility Module (Sheet 30)

NOTE: Sheet 2 is blank.

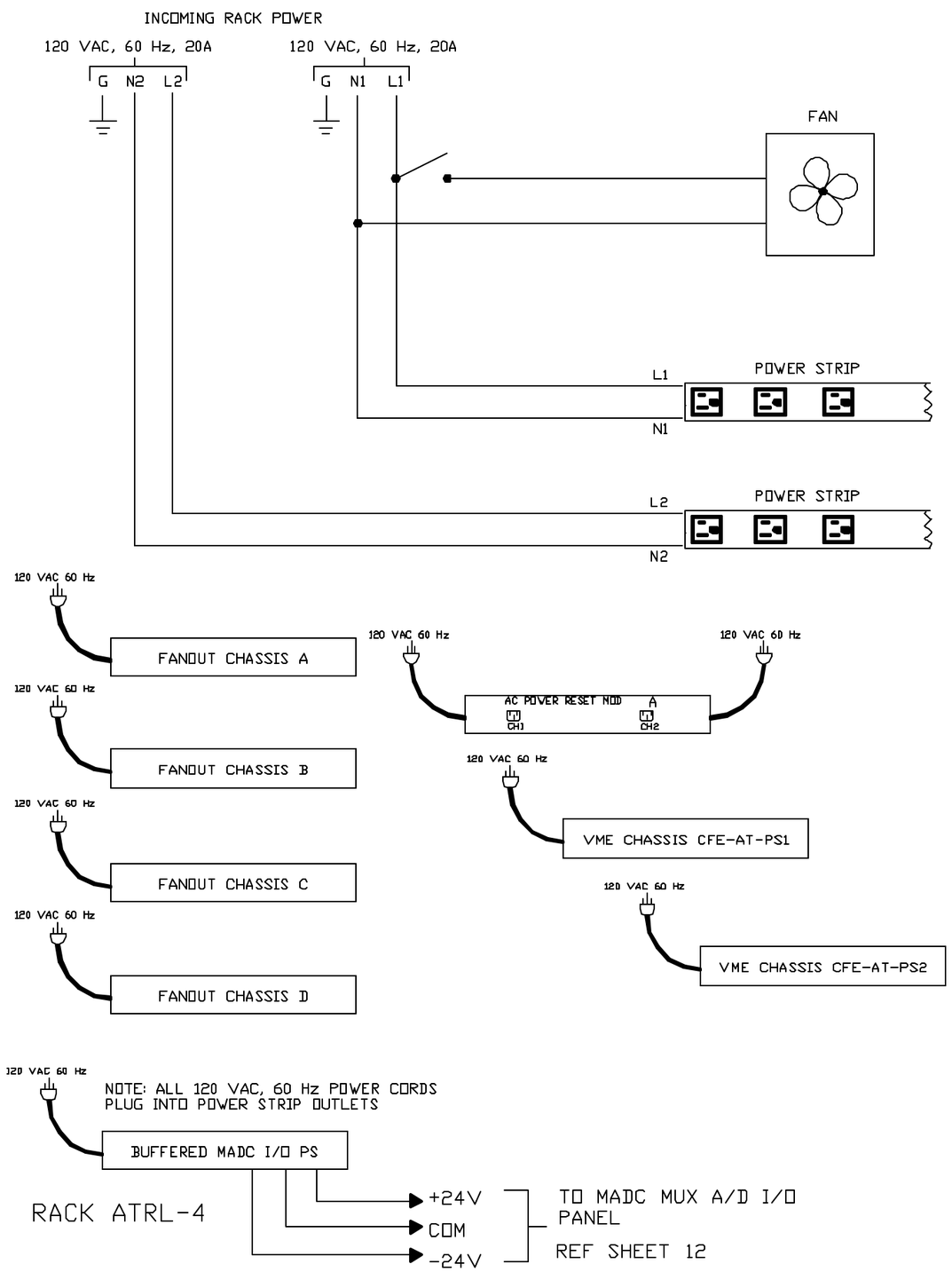

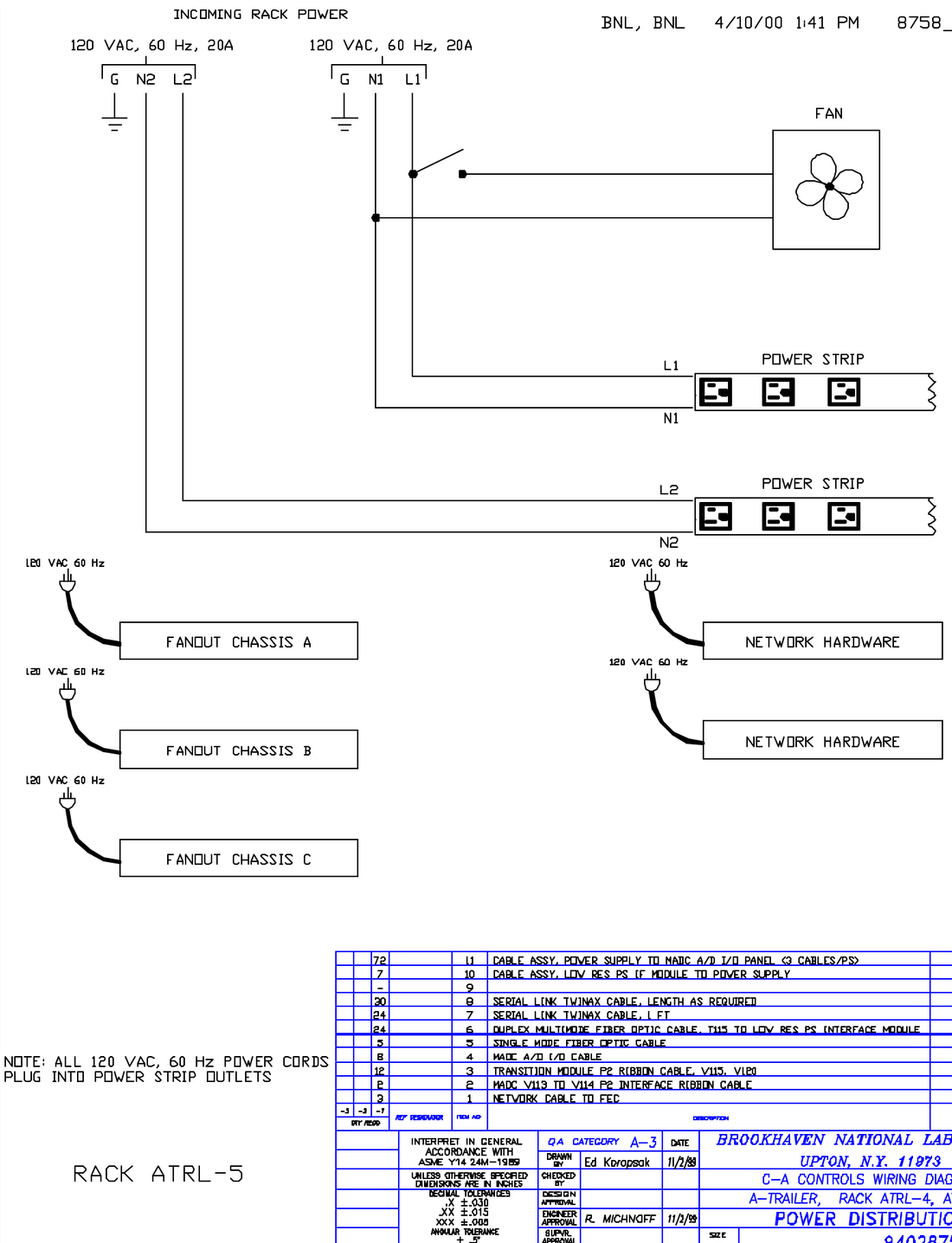

BNL, BNL 4/10/00 1:41 PM 8758_01.dwg

REV.	ZONE	ECN NO.	DATE	BY	CKR	APP.

	72		11	CABLE ASSY, POWER SUPPLY TO MADC A/D I/O PANEL (3 CABLES/PS)	
	7		10	CABLE ASSY, LOW RES PS (F MODULE TO POWER SUPPLY	
	-		9		
	20		8	SERIAL LINK TWINAX CABLE, LENGTH AS REQUIRED	94028176
	24		7	SERIAL LINK TWINAX CABLE, 1 FT	94028176
	24		6	DUPLEX MULTIMODE FIBER OPTIC CABLE, T115 TO LOW RES PS INTERFACE MODULE	94028249
	5		5	SINGLE MODE FIBER OPTIC CABLE	94028231
	8		4	MADC A/D I/O CABLE	94028216
	12		3	TRANSITION MODULE P2 RIBBON CABLE, V115, V120	94028159
	2		2	MADC V113 TO V114 P2 INTERFACE RIBBON CABLE	94028218
	3		1	NETWORK CABLE TO FEC	
-3 -2 -1 QTY REQD	REF DESIGNATOR		ITEM NO	DESCRIPTION	MFG. PART NO. AND VEN.

INTERPRET IN GENERAL ACCORDANCE WITH ASME Y14 24M-1989

UNLESS OTHERWISE SPECIFIED DIMENSIONS ARE IN INCHES
DECIMAL TOLERANCES
.X ±.030
.XX ±.015
.XXX ±.005
ANGULAR TOLERANCE ± .5°

OUTSTANDING ECN

NA FINISH

BREAK SHARP EDGES
MAX XX MIN XX

QA CATEGORY A-3		DATE
DRAWN BY	Ed Koropsak	11/2/99
CHECKED BY		
DESIGN APPROVAL		
ENGINEER APPROVAL	R. MICHNOFF	11/2/99
SUPVR. APPROVAL		
NEXT ASSEMBLY		

BROOKHAVEN NATIONAL LABORATORY
UPTON, N.Y. 11973

C-A CONTROLS WIRING DIAGRAM
A-TRAILER, RACK ATRL-4, ATRL-5
POWER DISTRIBUTION

SIZE D
94028758
DRAWING NUMBER
REV A

MATERIAL ——— SCALE NA WEIGHT: – SHEET 1 OF 30

*AUTOCAD

REV.	ZONE	ECN NO.	DATE	BY	CKR	APP.

ACS, BNL 11/18/99 4:45 PM 8758_02.dwg

BLANK PAGE

-3	-2	-1	REF DESIGNATOR	ITEM NO.	DESCRIPTION	MAT'L DWG NO.,BNL NO.
QTY REQD						

INTERPRET IN GENERAL ACCORDANCE WITH ASME Y14.24M-1989

UNLESS OTHERWISE SPECIFIED DIMENSIONS ARE IN INCHES

DECIMAL TOLERANCES
.X ±.030
.XX ±.015
.XXX ±.005
ANGULAR TOLERANCE
± .5°

NA FINISH

BREAK SHARP EDGES
MAX. XX MIN. XX

OUTSTANDING ECN

Q.A. CATEGORY A-3		DATE
DRAWN BY	Ed Koropsak	11/2/99
CHECKED BY		
DESIGN APPROVAL		
ENGINEER APPROVAL	R. MICHNOFF	11/2/99
SUPVR. APPROVAL		

NEXT ASSEMBLY

BROOKHAVEN NATIONAL LABORATORY
UPTON, N.Y. 11973

C-A CONTROLS WIRING DIAGRAM
A-TRAILER, RACK ATRL-4, ATRL-5

POWER DISTRIBUTION

SIZE D | DRAWING NUMBER 94028758 | REV. A

MATERIAL: ——— SCALE: NA WEIGHT: – SHEET 2 OF 30

*AUTOCAD

REV.	ZONE	ECN NO.	DATE	BY	CKR	APP.

BNL, BNL 4/10/00 1:44 PM 8758_03.dwg

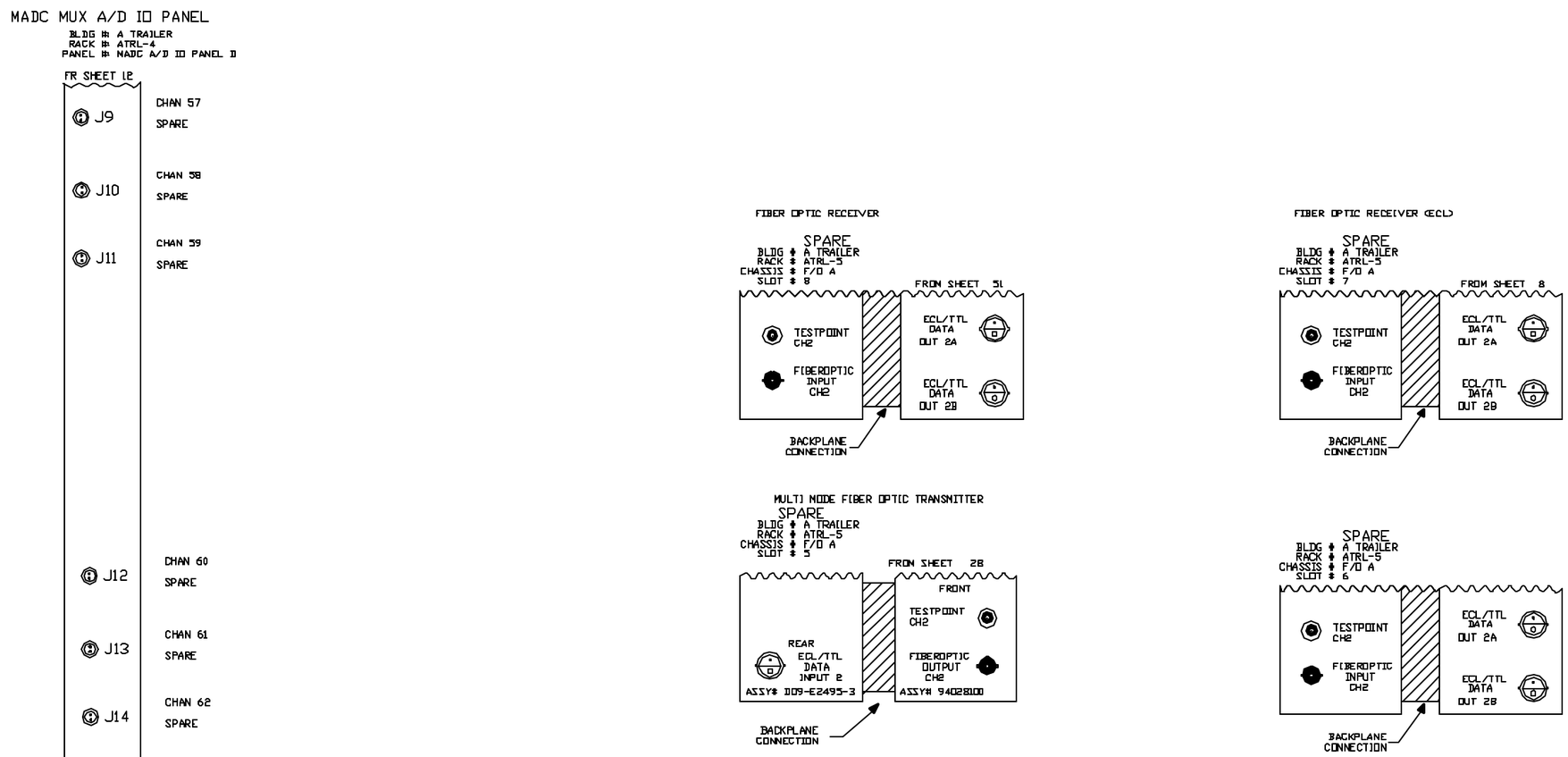

-3	-2	-1	REF DESIGNATOR	ITEM NO	DESCRIPTION	MAT'L DWG NO JAN. NO.
DAY BOOK						

INTERPRET IN GENERAL ACCORDANCE WITH ASME Y14 24M-1989

UNLESS OTHERWISE SPECIFIED DIMENSIONS ARE IN INCHES
DECIMAL TOLERANCES
.X ±.030
.XX ±.015
.XXX ±.005
ANGULAR TOLERANCE ± .5°

NA FINISH
BREAK SHARP EDGES
MAX XX MIN XX

OUTSTANDING ECN

QA CATEGORY A-3		DATE
DRAWN BY	Ed Koropsak	11/2/88
CHECKED BY		
DESIGN APPROVAL		
ENGINEER APPROVAL	R MICHNOFF	11/2/99
SUPVR. APPROVAL		
NEXT ASSEMBLY		

BROOKHAVEN NATIONAL LABORATORY
UPTON, N.Y. 11973

C-A CONTROLS WIRING DIAGRAM
A-TRAILER
SPARE F/O RCVR/XMIT CHANNELS

SIZE D | 94028758 | REV A
DRAWING NUMBER

MATERIAL ——— | SCALE NA | WEIGHT: – | SHEET 3 OF 30

*AUTOCAD

REV.	ZONE	ECN NO.	DATE	BY	CKR	APP.

ACS, BNL 11/18/99 4:46 PM 8758_04.dwg

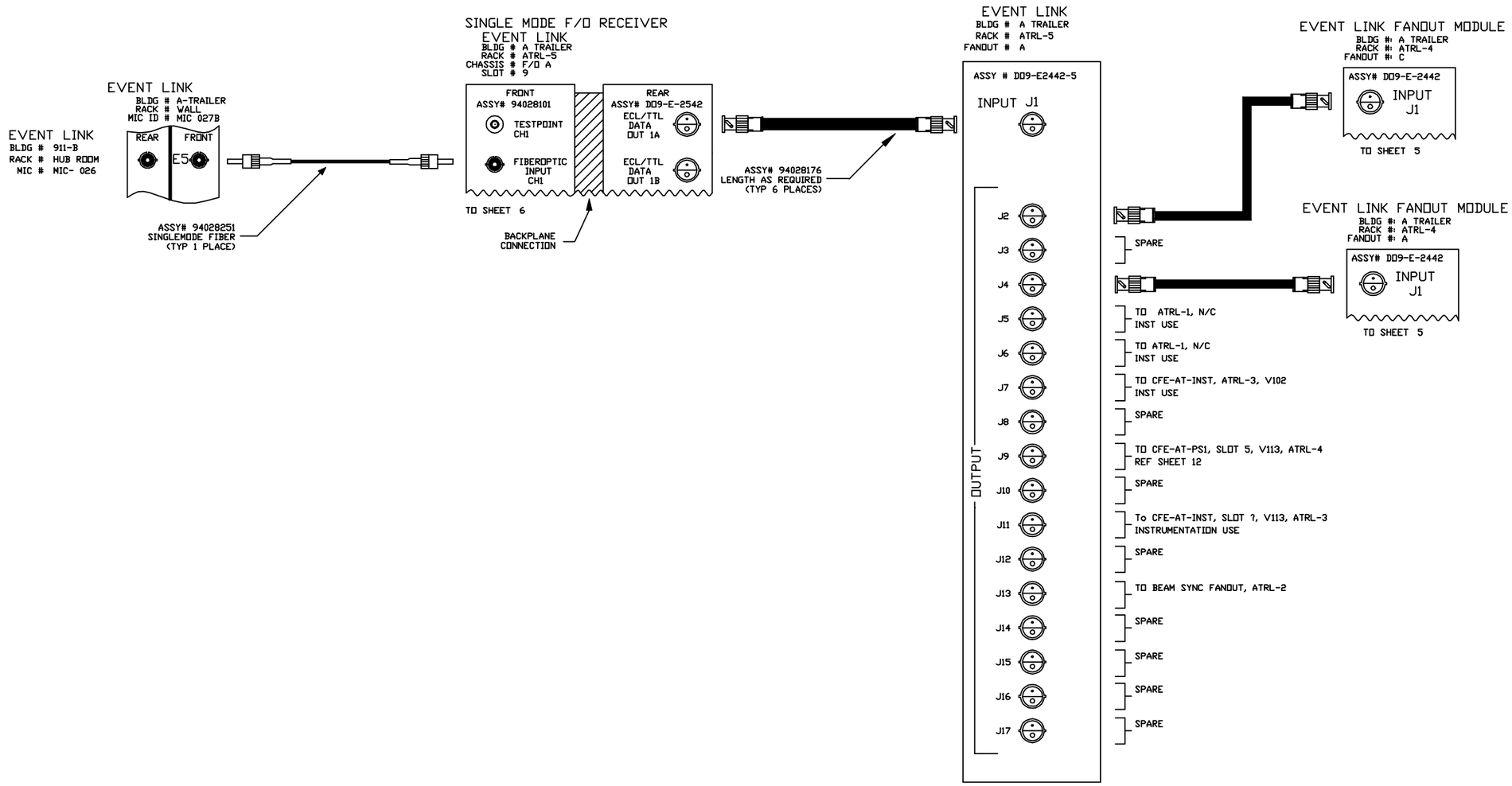

-3	-2	-1	REF DESIGNATOR	ITEM NO.	DESCRIPTION	MAT'L DWG NO.,BNL NO.
QTY REQD						

INTERPRET IN GENERAL ACCORDANCE WITH ASME Y14.24M-1989

UNLESS OTHERWISE SPECIFIED DIMENSIONS ARE IN INCHES

DECIMAL TOLERANCES
.X ±.030
.XX ±.015
.XXX ±.005
ANGULAR TOLERANCE
± .5'

OUTSTANDING ECN

NA FINISH

BREAK SHARP EDGES
MAX. XX MIN. XX

Q.A. CATEGORY A-3		DATE
DRAWN BY	Ed Koropsak	11/2/99
CHECKED BY		
DESIGN APPROVAL		
ENGINEER APPROVAL	R. MICHNOFF	11/2/99
SUPVR. APPROVAL		

NEXT ASSEMBLY

BROOKHAVEN NATIONAL LABORATORY
UPTON, N.Y. 11973

C-A CONTROLS WIRING DIAGRAM

A-TRAILER

EVENT LINK

SIZE D | DRAWING NUMBER 94028758 | REV. A

MATERIAL: ——— SCALE: NA WEIGHT: – SHEET 4 OF 30

*AUTOCAD

BNL, BNL 4/10/00 1:46 PM 8758_05.dwg

REV.	ZONE	ECN NO.	DATE	BY	CKR	APP.

EVENT LINK FANOUT MODULE

BLDG # A TRAILER
RACK # ATRL-4
FANOUT # A

FROM SHEET 4
ASSY # 1109-E2442-5

OUTPUT

J2	SPARE
J3	To CFE-AT-PS1, SLOT 4, V109 REF SHEET 11
J4	TO CFE-AT-INST, SLOT 3, V108, ATRL-3
J5	TO CFE-AT-INST, SLOT 12, V102, ATRL-3
J6	TO CFE-BPM-TEMP, SLOT 3, V109, ATRL-2
J7	TO CFE-BPM-TEMP, SLOT 4, V102, ATRL-2
J8	TO ATRL-2, N/C
J9	SPARE
J10	SPARE
J11	SPARE
J12	SPARE
J13	SPARE
J14	TO CFE-AT-INST, SLOT 7, V113, ATRL-3
J15	SPARE
J16	SPARE
J17	SPARE

EVENT LINK FANOUT MODULE

BLDG # A TRAILER
RACK # ATRL-4
FANOUT # C

FROM SHEET 4
ASSY # 1109-E2442-5

OUTPUT

J2	TO CFE-AT-PS2, SLOT 20, V120 REF SHEET 28
J3	SPARE
J4	SPARE
J5	TO CFE-AT-PS2, SLOT 15, V115 REF SHEET 25
J6	TO CFE-AT-PS2, SLOT 14, V115 REF SHEET 24
J7	TO CFE-AT-PS2, SLOT 13, V115 REF SHEET 23
J8	TO CFE-AT-PS2, SLOT 12, V115 REF SHEET 22
J9	TO CFE-AT-PS2, SLOT 11, V115 REF SHEET 21
J10	TO CFE-AT-PS2, SLOT 10, V115 REF SHEET 20
J11	TO CFE-AT-PS2, SLOT 9, V115 REF SHEET 19
J12	TO CFE-AT-PS2, SLOT 8, V115 REF SHEET 18
J13	TO CFE-AT-PS2, SLOT 7, V115 REF SHEET 17
J14	TO CFE-AT-PS2, SLOT 6, V115 REF SHEET 16
J15	TO CFE-AT-PS2, SLOT 5, V115 REF SHEET 15
J16	TO CFE-AT-PS2, SLOT 4, V115 REF SHEET 14
J17	TO CFE-AT-PS2, SLOT 3, V108 REF SHEET 13

-3	-2	-1	REF DESIGNATOR	ITEM NO	DESCRIPTION	MAT'L SPEC NO./JAN. NO.
DIV ECOD						

INTERPRET IN GENERAL ACCORDANCE WITH ASME Y14 24M-1989

UNLESS OTHERWISE SPECIFIED DIMENSIONS ARE IN INCHES
DECIMAL TOLERANCES
.X ±.030
.XX ±.015
.XXX ±.008
ANGULAR TOLERANCE ± .5°

NA
FINISH

BREAK SHARP EDGES
MAX XX MIN XX

OUTSTANDING ECN

QA CATEGORY A-3		DATE
DRAWN BY	Ed Koropsak	11/2/99
CHECKED BY		
DESIGN APPROVAL		
ENGINEER APPROVAL	R MICHNOFF	11/2/99
SUPVR. APPROVAL		

NEXT ASSEMBLY

BROOKHAVEN NATIONAL LABORATORY
UPTON, N.Y. 11973

C-A CONTROLS WIRING DIAGRAM

A-TRAILER

EVENT LINK

SIZE D | DRAWING NUMBER 94028758 | REV A

MATERIAL ——— | SCALE NA | WEIGHT: – | SHEET 5 of 30

1 *AUTOCAD

REV.	ZONE	ECN NO.	DATE	BY	CKR	APP.

ACS, BNL 11/18/99 4:48 PM 8758_06.dwg

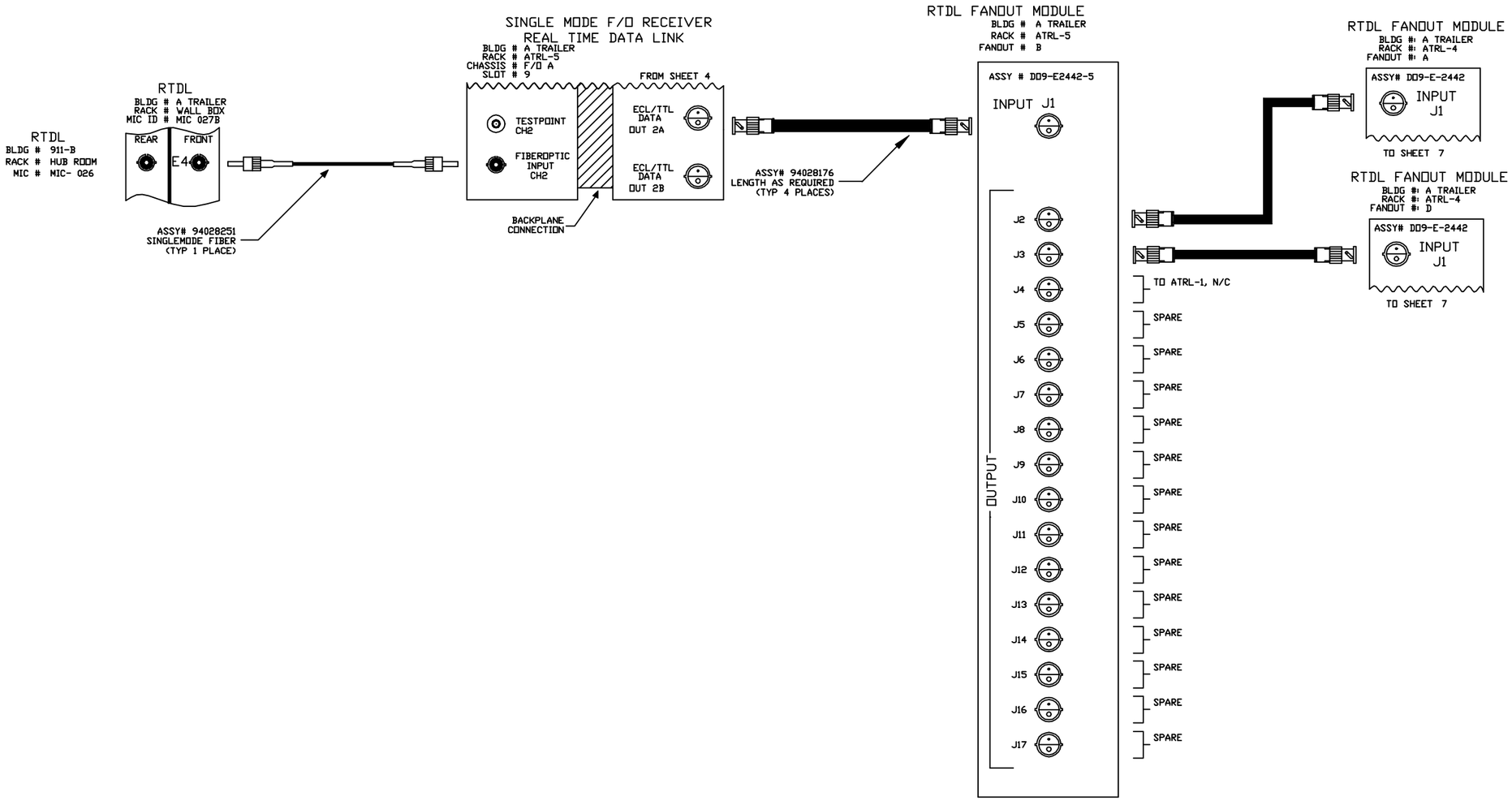

-3	-2	-1	REF DESIGNATOR	ITEM NO.	DESCRIPTION	MAT'L DWG NO.,BNL NO.
QTY REQD						

INTERPRET IN GENERAL ACCORDANCE WITH ASME Y14.24M-1989

UNLESS OTHERWISE SPECIFIED DIMENSIONS ARE IN INCHES

DECIMAL TOLERANCES
.X ±.030
.XX ±.015
.XXX ±.005
ANGULAR TOLERANCE
± .5'

OUTSTANDING ECN

NA FINISH

BREAK SHARP EDGES
MAX. XX MIN. XX

Q.A. CATEGORY A-3		DATE
DRAWN BY	Ed Koropsak	11/2/99
CHECKED BY		
DESIGN APPROVAL		
ENGINEER APPROVAL	R. MICHNOFF	11/2/99
SUPVR. APPROVAL		

NEXT ASSEMBLY

BROOKHAVEN NATIONAL LABORATORY
UPTON, N.Y. 11973

C-A CONTROLS WIRING DIAGRAM

A-TRAILER

REAL TIME DATA LINK

SIZE D | DRAWING NUMBER 94028758 | REV. A

MATERIAL: ——— | SCALE: NA | WEIGHT: – | SHEET 6 OF 30

*AUTOCAD

REV.	ZONE	ECN NO.	DATE	BY	CKR	APP.

ACS, BNL 11/18/99 4:49 PM 8758_07.dwg

RTDL FANOUT MODULE
BLDG # A TRAILER
RACK # ATRL-4
FANOUT # B

FROM SHEET 6
ASSY # DD9-E2442-5

OUTPUT

J2	TO CFE-AT-PS1, SLOT 4, V108 REF SHEET 11
J3	SPARE
J4	TO CFE-AT-INST, SLOT 3, V108
J5	TO CFE-BPM-TEMP, SLOT 3, V108
J6	SPARE
J7	SPARE
J8	SPARE
J9	SPARE
J10	SPARE
J11	SPARE
J12	SPARE
J13	SPARE
J14	SPARE
J15	SPARE
J16	SPARE
J17	SPARE

RTDL FANOUT MODULE
BLDG # A TRAILER
RACK # ATRL-4
FANOUT # D

FROM SHEET 6
ASSY # DD9-E2442-5

OUTPUT

J2	SPARE
J3	SPARE
J4	SPARE
J5	TO CFE-AT-PS2, SLOT 15, V115 REF SHEET 25
J6	TO CFE-AT-PS2, SLOT 14, V115 REF SHEET 24
J7	TO CFE-AT-PS2, SLOT 13, V115 REF SHEET 23
J8	TO CFE-AT-PS2, SLOT 12, V115 REF SHEET 22
J9	TO CFE-AT-PS2, SLOT 11, V115 REF SHEET 21
J10	TO CFE-AT-PS2, SLOT 10, V115 REF SHEET 20
J11	TO CFE-AT-PS2, SLOT 9, V115 REF SHEET 19
J12	TO CFE-AT-PS2, SLOT 8, V115 REF SHEET 18
J13	TO CFE-AT-PS2, SLOT 7, V115 REF SHEET 17
J14	TO CFE-AT-PS2, SLOT 6, V115 REF SHEET 16
J15	TO CFE-AT-PS2, SLOT 5, V115 REF SHEET 15
J16	TO CFE-AT-PS2, SLOT 4, V115 REF SHEET 14
J17	TO CFE-AT-PS2, SLOT 3, V108 REF SHEET 13

-3	-2	-1	REF DESIGNATOR	ITEM NO.	DESCRIPTION	MAT'L. DWG NO.,BNL NO.
QTY REQD						

INTERPRET IN GENERAL ACCORDANCE WITH ASME Y14.24M-1989
UNLESS OTHERWISE SPECIFIED DIMENSIONS ARE IN INCHES
DECIMAL TOLERANCES .X ±.030 .XX ±.015 .XXX ±.005
ANGULAR TOLERANCE ± .5°

OUTSTANDING ECN
NA FINISH
BREAK SHARP EDGES MAX. XX MIN. XX

Q.A. CATEGORY A-3		DATE	BROOKHAVEN NATIONAL LABORATORY
DRAWN BY	Ed Koropsak	11/2/99	UPTON, N.Y. 11973
CHECKED BY			C-A CONTROLS WIRING DIAGRAM
DESIGN APPROVAL			A-TRAILER
ENGINEER APPROVAL	R. MICHNOFF	11/2/99	REAL TIME DATA LINK
SUPVR. APPROVAL			
NEXT ASSEMBLY			SIZE D — DRAWING NUMBER 94028758 — REV. A
			MATERIAL: ——— SCALE: NA WEIGHT: – SHEET 7 OF 30

*AUTOCAD

REV.	ZONE	ECN NO.	DATE	BY	CKR	APP.

ACS, BNL 11/18/99 4:50 PM 8758_08.dwg

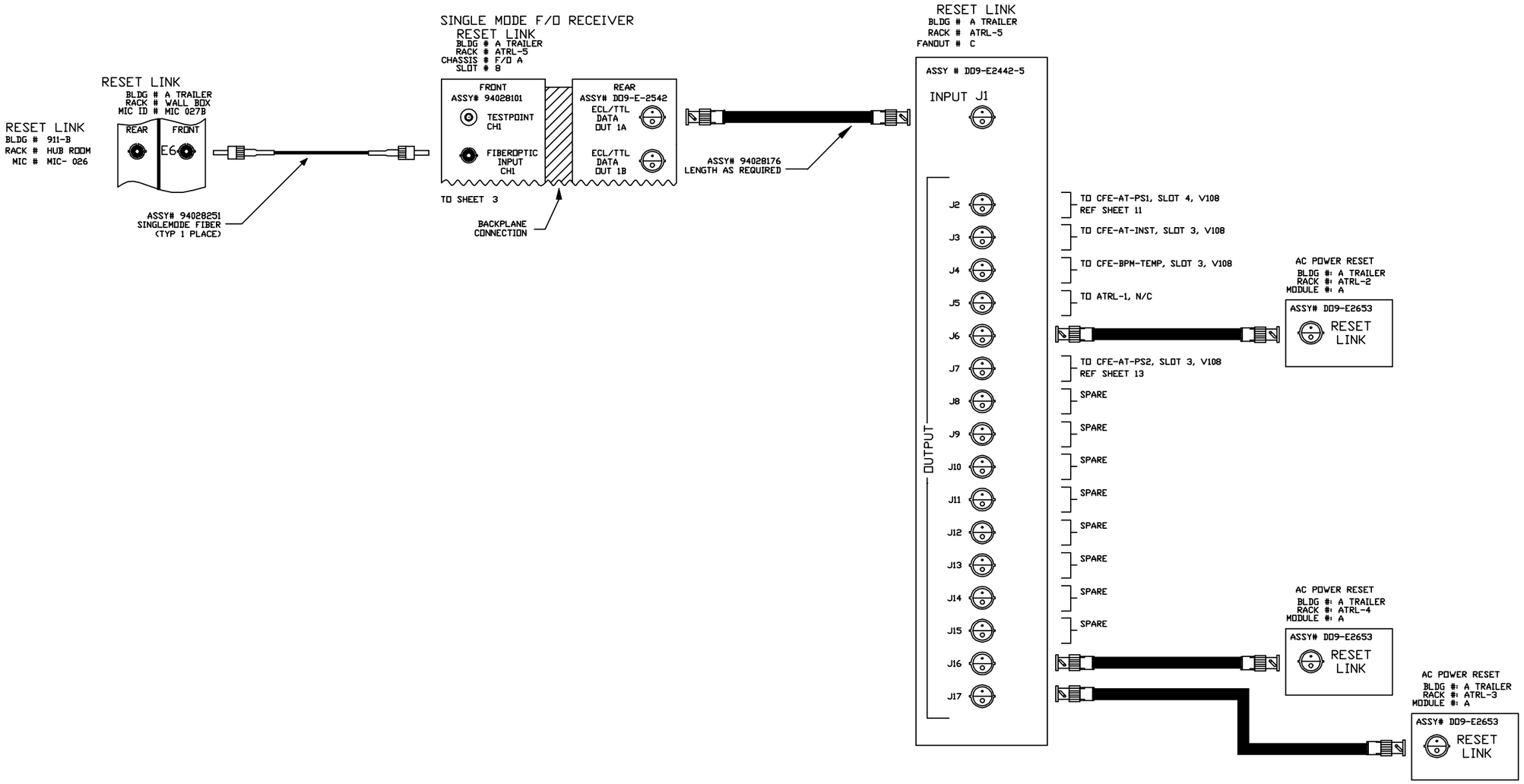

-3	-2	-1	REF DESIGNATOR	ITEM NO.	DESCRIPTION	MAT'L DWG NO.,BNL NO.
QTY REQD						

INTERPRET IN GENERAL ACCORDANCE WITH ASME Y14.24M-1989

UNLESS OTHERWISE SPECIFIED DIMENSIONS ARE IN INCHES

DECIMAL TOLERANCES
.X ±.030
.XX ±.015
.XXX ±.005
ANGULAR TOLERANCE
± .5'

OUTSTANDING ECN

NA FINISH

BREAK SHARP EDGES
MAX. XX MIN. XX

Q.A. CATEGORY A-3		DATE
DRAWN BY	Ed Koropsak	11/2/99
CHECKED BY		
DESIGN APPROVAL		
ENGINEER APPROVAL	R. MICHNOFF	11/2/99
SUPVR. APPROVAL		

NEXT ASSEMBLY

BROOKHAVEN NATIONAL LABORATORY
UPTON, N.Y. 11973

C-A CONTROLS WIRING DIAGRAM

A-TRAILER

RESET LINK

SIZE D | DRAWING NUMBER 94028758 | REV. A

MATERIAL: ——— SCALE: NA WEIGHT: – SHEET 8 OF 30

1 *AUTOCAD

REV.	ZONE	ECN NO.	DATE	BY	CKR	APP.

ACS, BNL 11/18/99 4:51 PM 8758_09.dwg

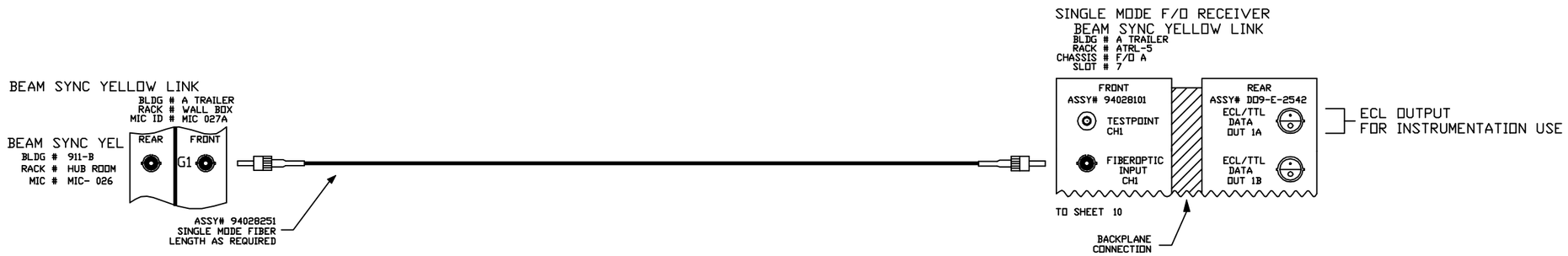

-3	-2	-1	REF DESIGNATOR	ITEM NO.	DESCRIPTION	MAT'L DWG NO./BNL NO.
QTY REQD						

INTERPRET IN GENERAL ACCORDANCE WITH ASME Y14.24M-1989

UNLESS OTHERWISE SPECIFIED DIMENSIONS ARE IN INCHES
DECIMAL TOLERANCES
.X ±.030
.XX ±.015
.XXX ±.005
ANGULAR TOLERANCE
± .5°

NA FINISH

BREAK SHARP EDGES
MAX. XX MIN. XX

OUTSTANDING ECN

Q.A. CATEGORY A-3		DATE
DRAWN BY	Ed Koropsak	11/2/99
CHECKED BY		
DESIGN APPROVAL		
ENGINEER APPROVAL	R. MICHNOFF	11/2/99
SUPVR. APPROVAL		

NEXT ASSEMBLY

BROOKHAVEN NATIONAL LABORATORY
UPTON, N.Y. 11973

C-A CONTROLS WIRING DIAGRAM
A-TRAILER

BEAM SYNC YELLOW LINK

SIZE D
94028758
DRAWING NUMBER
REV. A

MATERIAL: ——— SCALE: NA WEIGHT: – SHEET 9 OF 30

*AUTOCAD

REV.	ZONE	ECN NO.	DATE	BY	CKR	APP.

ACS, BNL 11/18/99 4:51 PM 8758_10.dwg

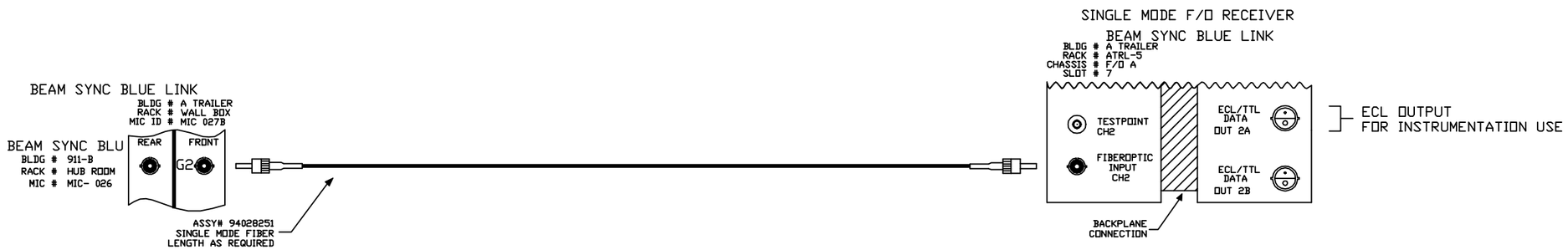

NOT CONNECTED AT THIS TIME!!

-3	-2	-1	REF DESIGNATOR	ITEM NO.	DESCRIPTION	MAT'L DWG NO.,BNL NO.
QTY REQD						

INTERPRET IN GENERAL ACCORDANCE WITH ASME Y14.24M-1989

UNLESS OTHERWISE SPECIFIED DIMENSIONS ARE IN INCHES
DECIMAL TOLERANCES
.X ±.030
.XX ±.015
.XXX ±.005
ANGULAR TOLERANCE
± .5°

NA FINISH — BREAK SHARP EDGES MAX. XX MIN. XX

OUTSTANDING ECN

Q.A. CATEGORY A-3		DATE
DRAWN BY	Ed Koropsak	11/2/99
CHECKED BY		
DESIGN APPROVAL		
ENGINEER APPROVAL	R. MICHNOFF	11/2/99
SUPVR. APPROVAL		

NEXT ASSEMBLY

BROOKHAVEN NATIONAL LABORATORY
UPTON, N.Y. 11973

C-A CONTROLS WIRING DIAGRAM
A-TRAILER
BEAM SYNC BLUE LINK

SIZE D — DRAWING NUMBER 94028758 — REV. A

MATERIAL: ——— SCALE: NA WEIGHT: – SHEET 10 OF 30

*AUTOCAD

REV.	ZONE	ECN NO.	DATE	BY	CKR	APP.

ACS, BNL 11/18/99 4:52 PM 8758_11.dwg

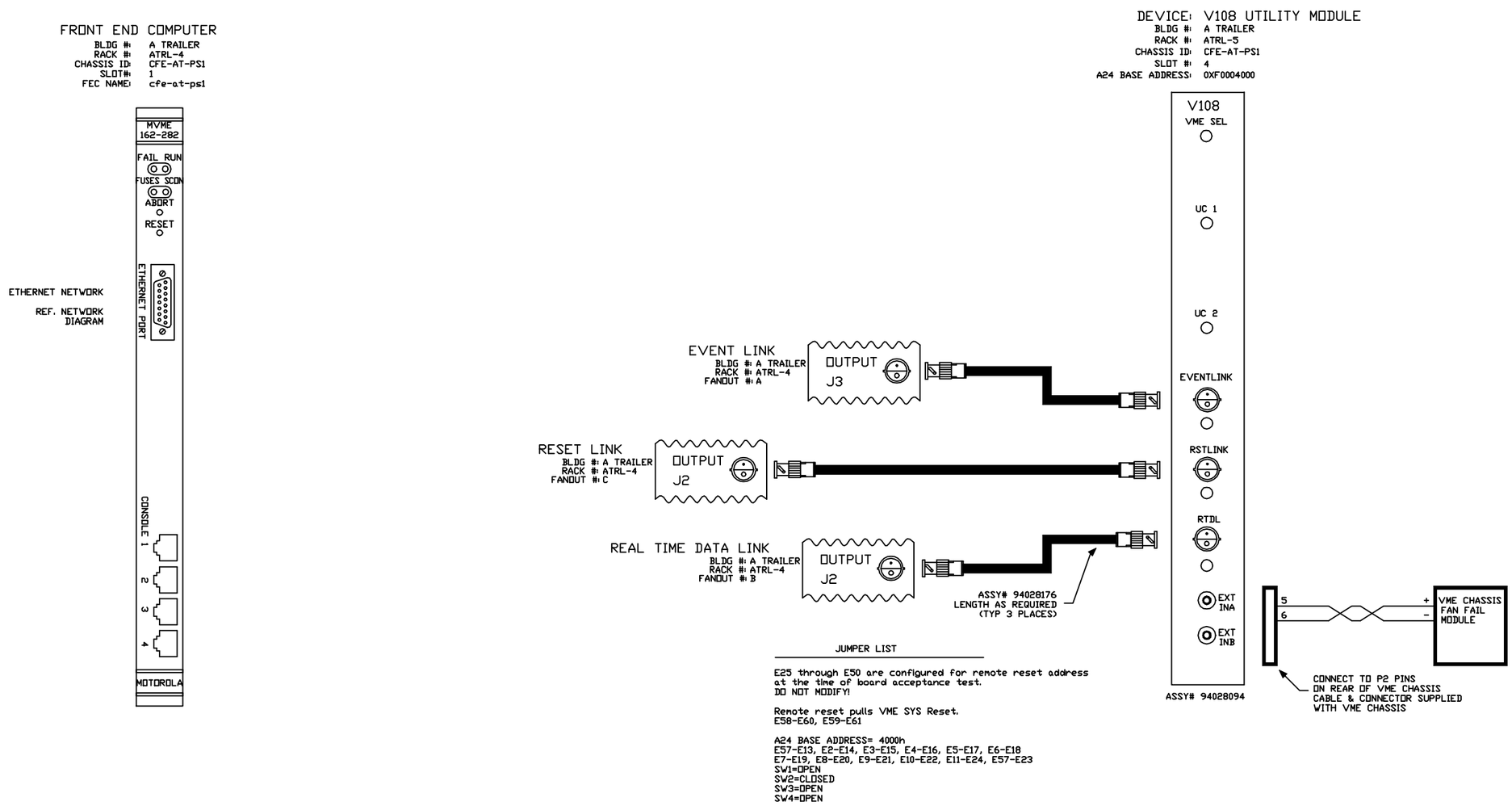

JUMPER LIST

E25 through E50 are configured for remote reset address at the time of board acceptance test.
DO NOT MODIFY!

Remote reset pulls VME SYS Reset.
E58-E60, E59-E61

A24 BASE ADDRESS= 4000h
E57-E13, E2-E14, E3-E15, E4-E16, E5-E17, E6-E18
E7-E19, E8-E20, E9-E21, E10-E22, E11-E24, E57-E23
SW1=OPEN
SW2=CLOSED
SW3=OPEN
SW4=OPEN

-3	-2	-1	REF DESIGNATOR	ITEM NO.	DESCRIPTION	MAT'L DWG NO./INL NO.
QTY REQD						

INTERPRET IN GENERAL ACCORDANCE WITH ASME Y14.24M-1989

UNLESS OTHERWISE SPECIFIED DIMENSIONS ARE IN INCHES

DECIMAL TOLERANCES
.X ±.030
.XX ±.015
.XXX ±.005
ANGULAR TOLERANCE
± .5°

OUTSTANDING ECN

NA FINISH

BREAK SHARP EDGES
MAX. XX MIN. XX

Q.A. CATEGORY A-3		DATE
DRAWN BY	Ed Koropsak	11/2/99
CHECKED BY		
DESIGN APPROVAL		
ENGINEER APPROVAL	R. MICHNOFF	11/2/99
SUPVR. APPROVAL		

NEXT ASSEMBLY

BROOKHAVEN NATIONAL LABORATORY
UPTON, N.Y. 11973

C-A CONTROLS WIRING DIAGRAM
A-TRAILER, VME CHASSIS CFE-AT-PS1
FT END COMP/V108 UTIL MODULE

SIZE D | DRAWING NUMBER 94028758 | REV. A

MATERIAL: ——— SCALE: NA WEIGHT: — SHEET 11 OF 30

*AUTOCAD

BNL, BNL 4/10/00 1:48 PM 8758_12.dwg

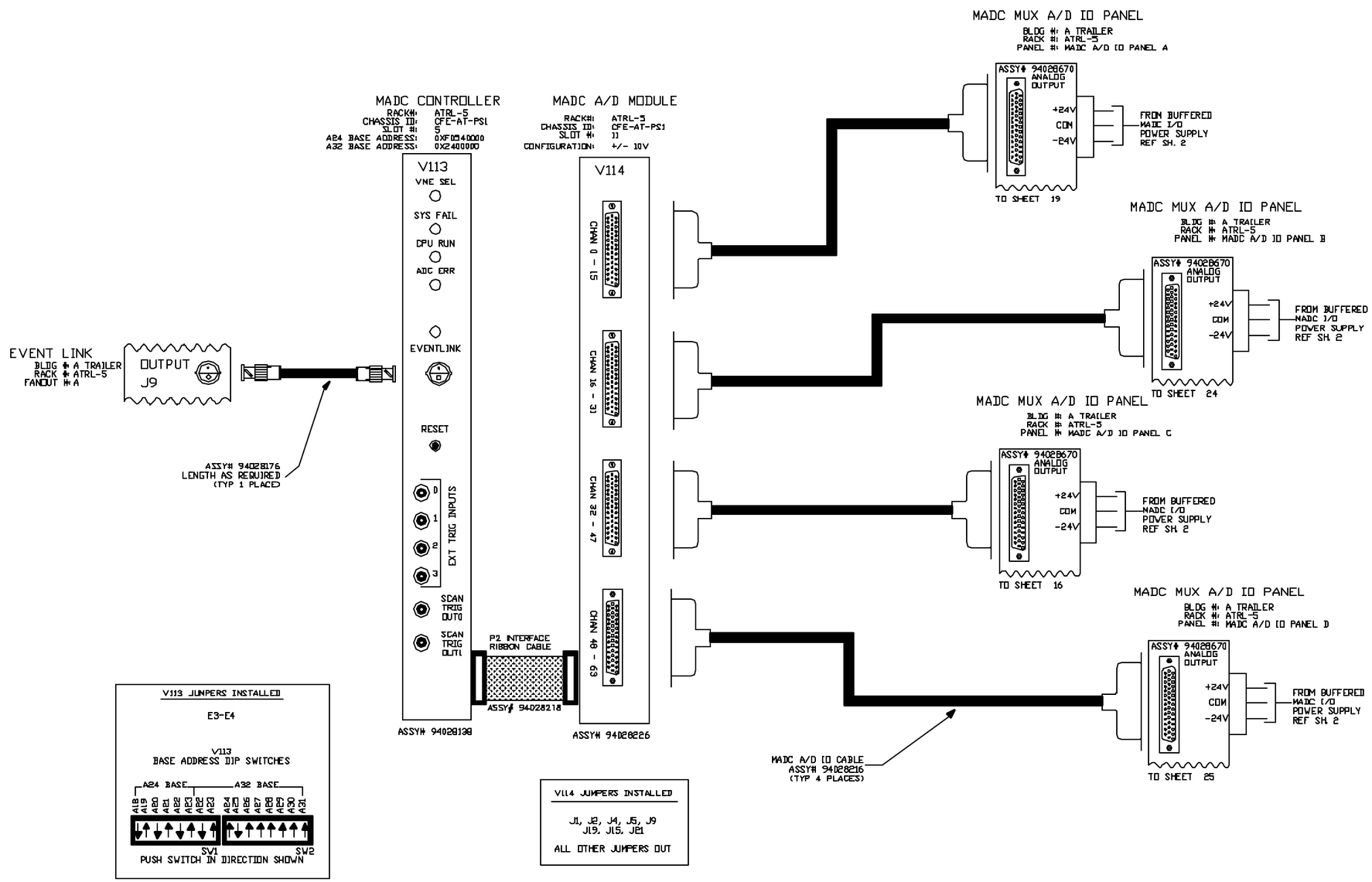

REV.	ZONE	ECN NO.	DATE	BY	CKR	APP.

-3	-2	-1	REF REMARKS	ITEM NO	DESCRIPTION	MAT'L RAW NO./INL NO.
DATE REQD						

INTERPRET IN GENERAL ACCORDANCE WITH ASME Y14.24M-1989

UNLESS OTHERWISE SPECIFIED DIMENSIONS ARE IN INCHES

DECIMAL TOLERANCES
.X ±.030
.XX ±.015
.XXX ±.008
ANGULAR TOLERANCE
± .5°

NA FINISH

BREAK SHARP EDGES
MAX XX MIN XX

OUTSTANDING ECN

QA CATEGORY A-3

		DATE
DRAWN BY	Ed Koropsak	11/2/89
CHECKED BY		
DESIGN APPROVAL		
ENGINEER APPROVAL	R. MICHNOFF	11/2/89
SUPVR. APPROVAL		

NEXT ASSEMBLY

BROOKHAVEN NATIONAL LABORATORY
UPTON, N.Y. 11973

C-A CONTROLS WIRING DIAGRAM

A-TRAILER, VME CHASSIS CFE-AT-PS1

MADC SYSTEM

SIZE D

94028758

DRAWING NUMBER

REV A

MATERIAL ——— SCALE NA WEIGHT: – SHEET 12 OF 30

1 *AUTOCAD

REV.	ZONE	ECN NO.	DATE	BY	CKR	APP.

ACS, BNL 11/18/99 4:53 PM 8758_13.dwg

FRONT END COMPUTER
BLDG #: A TRAILER
RACK #: ATRL-4
CHASSIS ID: CFE-AT-PS2
SLOT#: 1
FEC NAME: cfe-at-ps2

DEVICE: MM-6702 MEMORY MODULE
BLDG #: A TRAILER
RACK #: ATRL-4
CHASSIS ID: CFE-AT-PS2
SLOT #: 2
A24 BASE ADDRESS: XXX

DEVICE: V108 UTILITY MODULE
BLDG #: A TRAILER
RACK #: ATRL-4
CHASSIS ID: CFE-AT-PS2
SLOT #: 3
A24 BASE ADDRESS: 0XF0004000

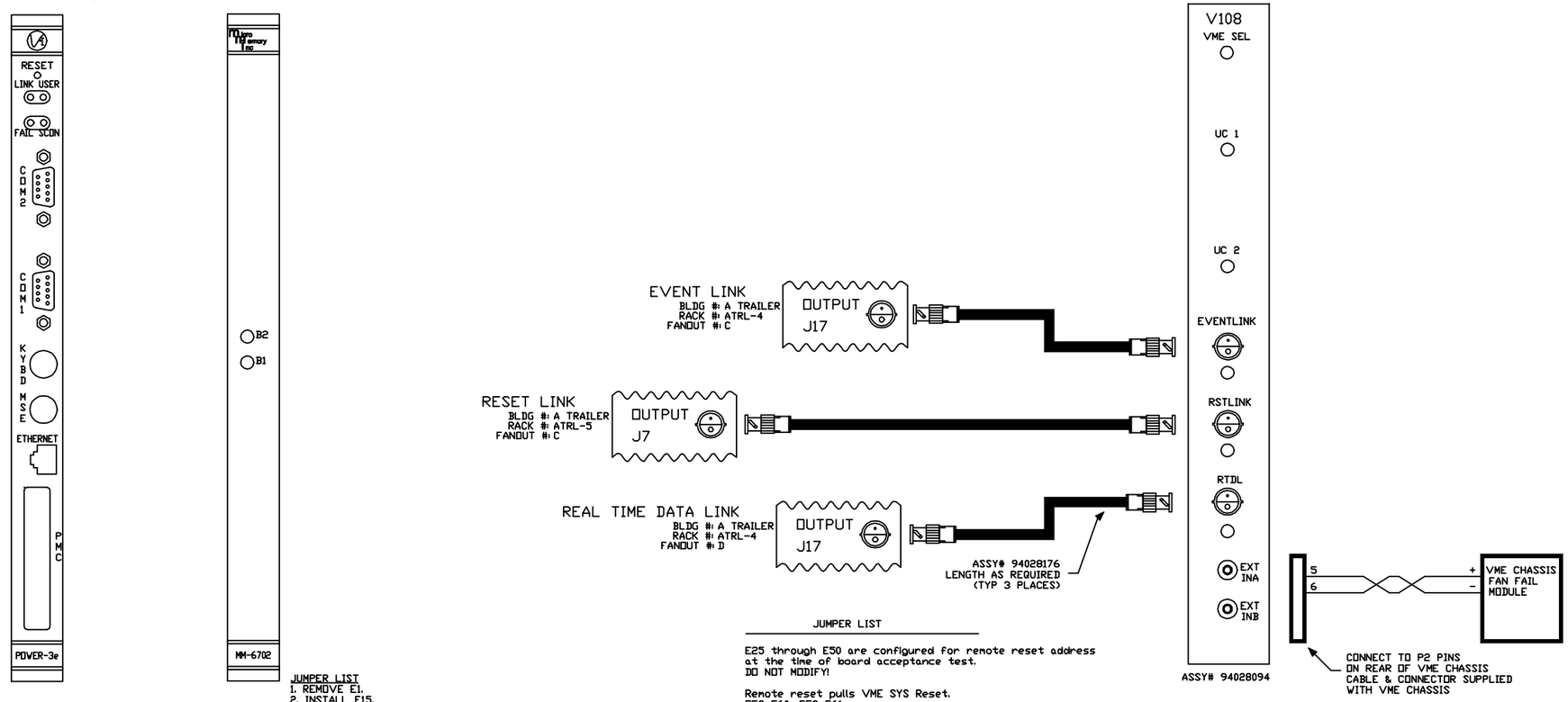

JUMPER LIST
1. REMOVE E1.
2. INSTALL E15.
3. SW3 CLOSE ALL POSITIONS.
4. SW2 CLOSE POSITIONS 7 AND 8.
5. SW1 CLOSE POSITIONS 2-8.
6. INSTALL E14 AND E25 TO ENABLE BATTERIES

JUMPER LIST

E25 through E50 are configured for remote reset address at the time of board acceptance test.
DO NOT MODIFY!

Remote reset pulls VME SYS Reset.
E58-E60, E59-E61

A24 BASE ADDRESS= 4000h
E57-E13, E2-E14, E3-E15, E4-E16, E5-E17, E6-E18
E7-E19, E8-E20, E9-E21, E10-E22, E11-E24, E57-E23
SW1=OPEN
SW2=CLOSED
SW3=OPEN
SW4=OPEN

-3	-2	-1	REF DESIGNATOR	ITEM NO.	DESCRIPTION	MAT'L. DWG NO./BNL NO.
QTY REQD						

INTERPRET IN GENERAL ACCORDANCE WITH ASME Y14.24M-1989
UNLESS OTHERWISE SPECIFIED DIMENSIONS ARE IN INCHES
DECIMAL TOLERANCES
.X ±.030
.XX ±.015
.XXX ±.005
ANGULAR TOLERANCE ± .5°
OUTSTANDING ECN
NA FINISH
BREAK SHARP EDGES MAX. XX MIN. XX

Q.A. CATEGORY A-3
DRAWN BY Ed Koropsak 11/2/99
CHECKED BY
DESIGN APPROVAL
ENGINEER APPROVAL R. MICHNOFF 11/2/99
SUPVR. APPROVAL
NEXT ASSEMBLY

BROOKHAVEN NATIONAL LABORATORY
UPTON, N.Y. 11973
C-A CONTROLS WIRING DIAGRAM
A-TRAILER, VME CHASSIS CFE-AT-PS2
FT END COMP/V108 UTIL MODULE
SIZE D
94028758
DRAWING NUMBER
REV. A
MATERIAL: ——— SCALE: NA WEIGHT: – SHEET 13 OF 30

*AUTOCAD

REV.	ZONE	ECN NO.	DATE	BY	CKR	APP.

ACS, BNL 11/18/99 4:54 PM 8758_14.dwg

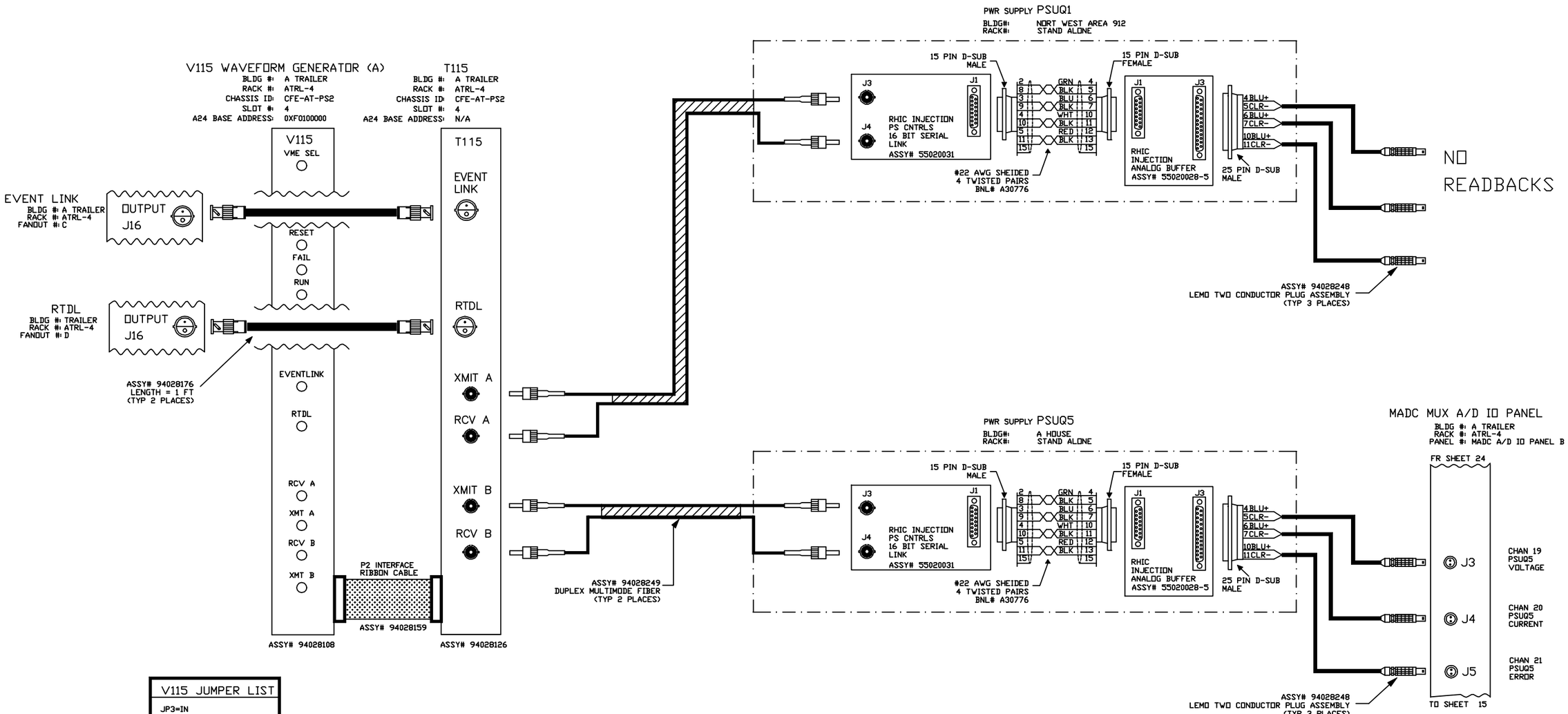

V115 JUMPER LIST
JP3=IN JP4=IN JP1=OUT JP2=OUT
A24 BASE ADDRESS JB1-A23=IN JB1-A22=IN JB1-A21=IN JB1-A20=OUT JB1-A19=IN JB1-A18=IN

-3	-2	-1	REF DESIGNATOR	ITEM NO.	DESCRIPTION	MAT'L. DWG NO./BNL NO.
QTY REQD						

INTERPRET IN GENERAL ACCORDANCE WITH ASME Y14.24M-1989

UNLESS OTHERWISE SPECIFIED DIMENSIONS ARE IN INCHES

DECIMAL TOLERANCES
.X ±.030
.XX ±.015
.XXX ±.005
ANGULAR TOLERANCE
± .5°

NA FINISH — BREAK SHARP EDGES MAX. XX MIN. XX

OUTSTANDING ECN

Q.A. CATEGORY A-3		DATE
DRAWN BY	Ed Koropsak	11/2/99
CHECKED BY		
DESIGN APPROVAL		
ENGINEER APPROVAL	R. MICHNOFF	11/2/99
SUPVR. APPROVAL		
NEXT ASSEMBLY		

BROOKHAVEN NATIONAL LABORATORY
UPTON, N.Y. 11973

C-A CONTROLS WIRING DIAGRAM

A-TRAILER, CFE-AT-PS2

POWER SUPPLY PSUQ1/PSUQ5

SIZE D — DRAWING NUMBER 94028758 — REV. A

MATERIAL: ——— SCALE: NA WEIGHT: — SHEET 14 OF 30

1 *AUTOCAD

ACS, BNL 11/18/99 4:54 PM 8758_15.dwg

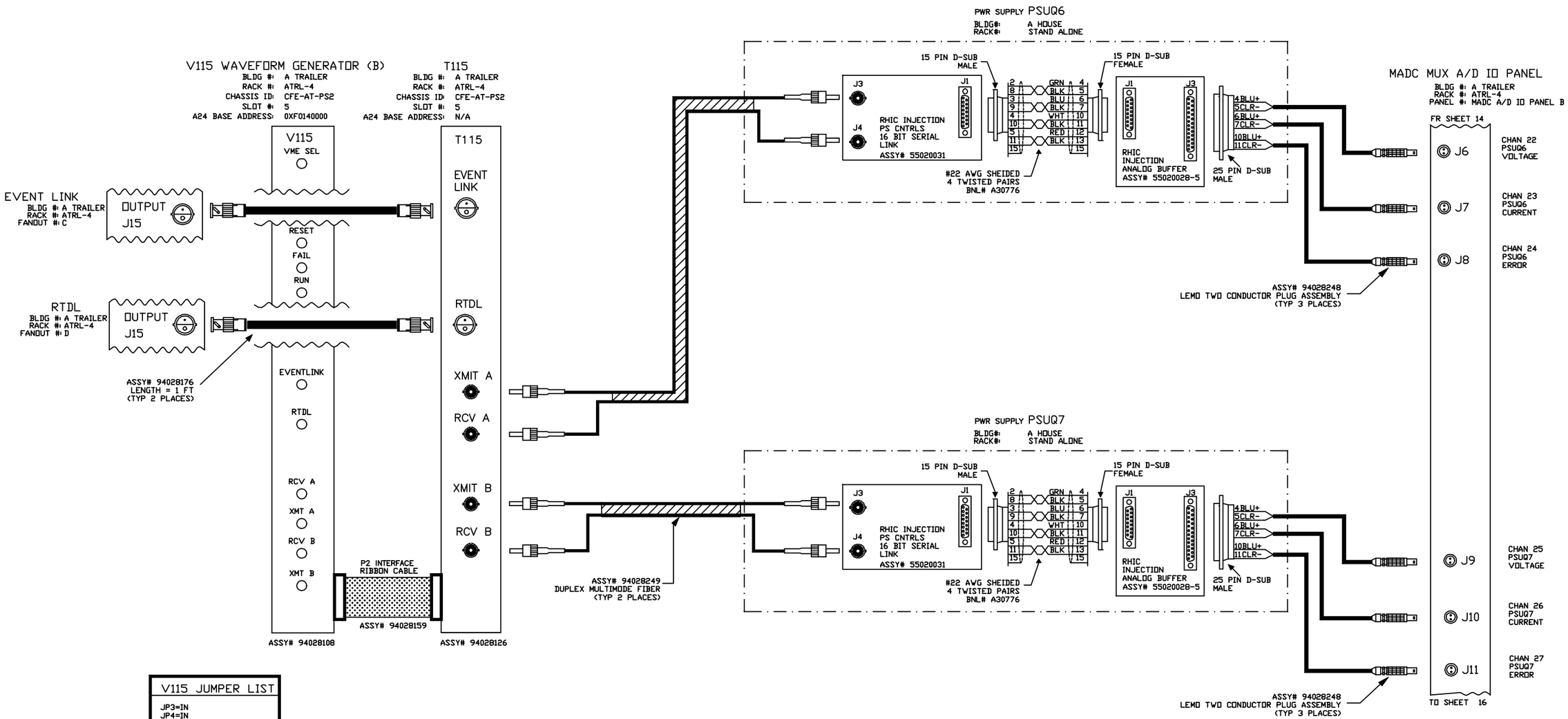

V115 JUMPER LIST
JP3=IN JP4=IN JP1=OUT JP2=OUT
A24 BASE ADDRESS JB1-A23=IN JB1-A22=IN JB1-A21=IN JB1-A20=OUT JB1-A19=IN JB1-A18=OUT

REV.	ZONE	ECN NO.	DATE	BY	CKR	APP.

-3	-2	-1	REF DESIGNATOR	ITEM NO.	DESCRIPTION	MAT'L DWG NO./BNL NO.
QTY REQD						

INTERPRET IN GENERAL ACCORDANCE WITH ASME Y14.24M-1989

UNLESS OTHERWISE SPECIFIED DIMENSIONS ARE IN INCHES

DECIMAL TOLERANCES
.X ±.030
.XX ±.015
.XXX ±.005
ANGULAR TOLERANCE
± .5°

OUTSTANDING ECN

NA FINISH

BREAK SHARP EDGES
MAX. XX MIN. XX

Q.A. CATEGORY A-3		DATE
DRAWN BY	Ed Koropsak	11/2/99
CHECKED BY		
DESIGN APPROVAL		
ENGINEER APPROVAL	R. MICHNOFF	11/2/99
SUPVR. APPROVAL		

NEXT ASSEMBLY

BROOKHAVEN NATIONAL LABORATORY
UPTON, N.Y. 11973

C-A CONTROLS WIRING DIAGRAM
A-TRAILER, CFE-AT-PS2
POWER SUPPLY PSUQ6/PSUQ7

SIZE D
94028758
DRAWING NUMBER
REV. A

MATERIAL: ——— SCALE: NA WEIGHT: – SHEET 15 OF 30

1 *AUTOCAD

REV.	ZONE	ECN NO.	DATE	BY	CKR	APP.

ACS, BNL 11/18/99 4:55 PM 8758_16.dwg

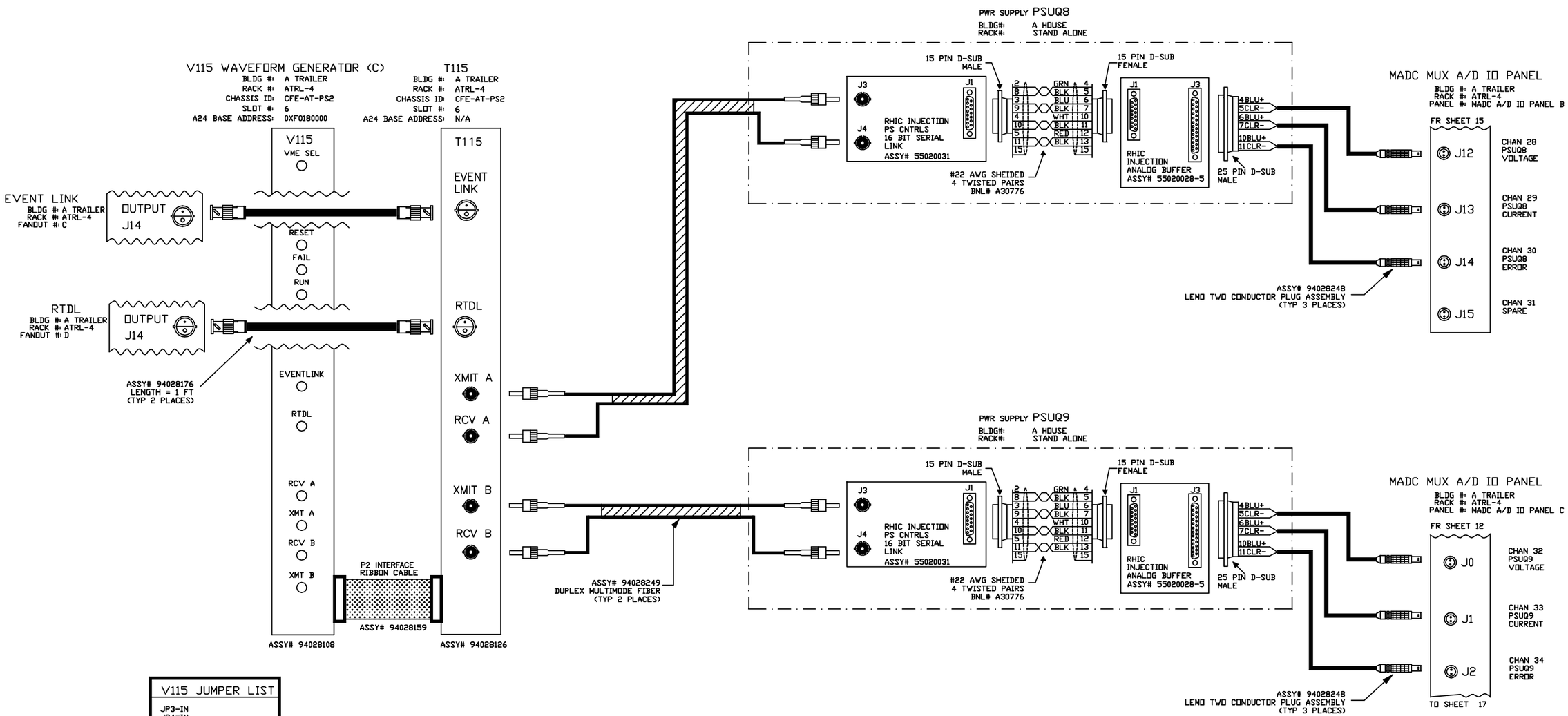

V115 JUMPER LIST
JP3=IN JP4=IN JP1=OUT JP2=OUT
A24 BASE ADDRESS JB1-A23=IN JB1-A22=IN JB1-A21=IN JB1-A20=OUT JB1-A19=OUT JB1-A18=IN

-3	-2	-1	REF DESIGNATOR	ITEM NO.	DESCRIPTION	MAT'L DWG NO./BNL NO.
QTY REQD						

INTERPRET IN GENERAL ACCORDANCE WITH ASME Y14.24M-1989

UNLESS OTHERWISE SPECIFIED DIMENSIONS ARE IN INCHES

DECIMAL TOLERANCES
.X ±.030
.XX ±.015
.XXX ±.005
ANGULAR TOLERANCE
± .5°

NA FINISH

BREAK SHARP EDGES
MAX. XX MIN. XX

OUTSTANDING ECN

Q.A. CATEGORY A-3		DATE
DRAWN BY	Ed Koropsak	11/2/99
CHECKED BY		
DESIGN APPROVAL		
ENGINEER APPROVAL	R. MICHNOFF	11/2/99
SUPVR. APPROVAL		
NEXT ASSEMBLY		

BROOKHAVEN NATIONAL LABORATORY
UPTON, N.Y. 11973

C-A CONTROLS WIRING DIAGRAM
A-TRAILER, CFE-AT-PS2
POWER SUPPLY PSUQ8/PSUQ9

SIZE D | DRAWING NUMBER 94028758 | REV. A

MATERIAL: ——— SCALE: NA WEIGHT: – SHEET 16 OF 30

*AUTOCAD

REV.	ZONE	ECN NO.	DATE	BY	CKR	APP.

ACS, BNL 11/18/99 4:56 PM 8758_17.dwg

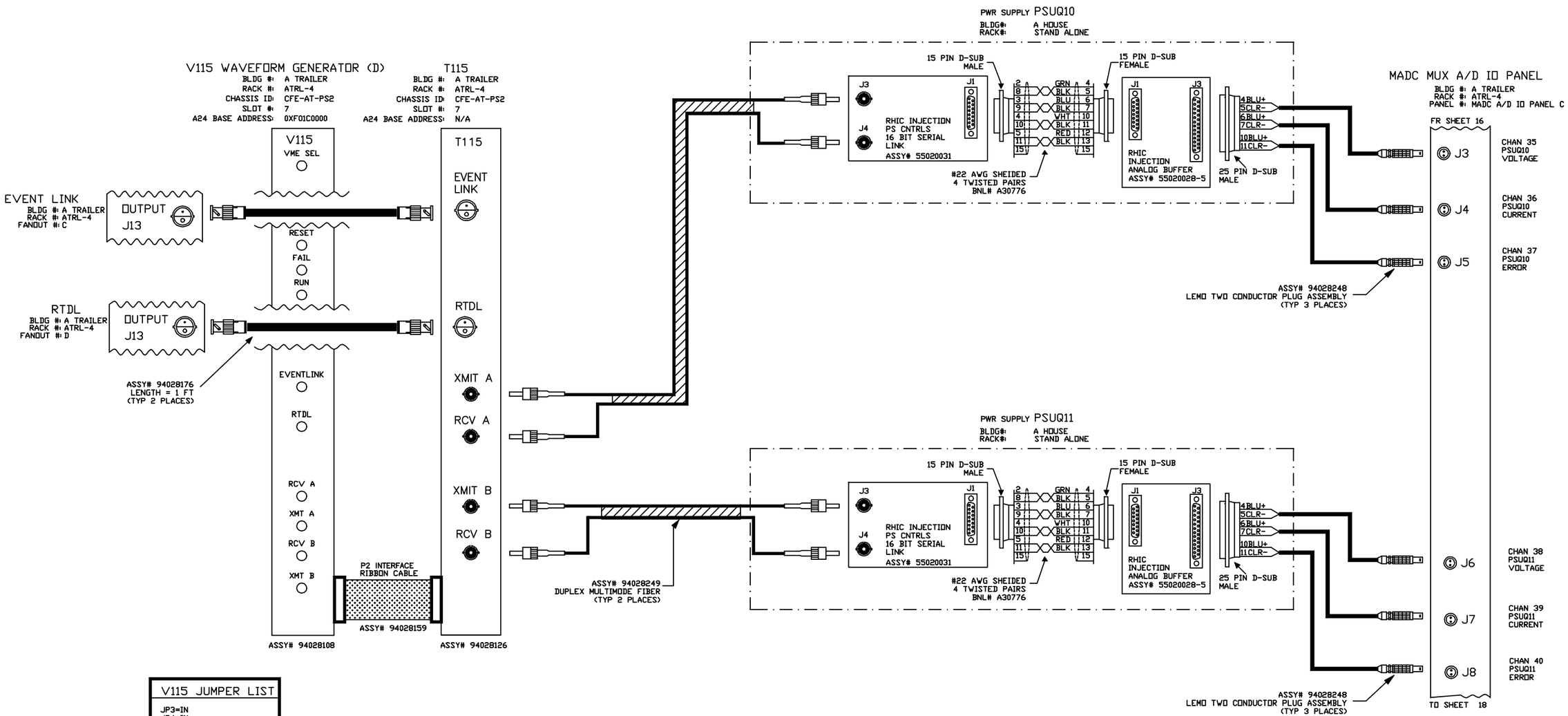

V115 JUMPER LIST
JP3=IN JP4=IN JP1=OUT JP2=OUT
A24 BASE ADDRESS JB1-A23=IN JB1-A22=IN JB1-A21=IN JB1-A20=OUT JB1-A19=OUT JB1-A18=OUT

-3	-2	-1	REF DESIGNATOR	ITEM NO.	DESCRIPTION	MAT'L DWG NO./BNL NO.
QTY REQD						

INTERPRET IN GENERAL ACCORDANCE WITH ASME Y14.24M-1989

UNLESS OTHERWISE SPECIFIED DIMENSIONS ARE IN INCHES

DECIMAL TOLERANCES
.X ±.030
.XX ±.015
.XXX ±.005
ANGULAR TOLERANCE
± .5°

NA FINISH

BREAK SHARP EDGES
MAX. XX MIN. XX

OUTSTANDING ECN

Q.A. CATEGORY A-3		DATE
DRAWN BY	Ed Koropsak	11/2/99
CHECKED BY		
DESIGN APPROVAL		
ENGINEER APPROVAL	R. MICHNOFF	11/2/99
SUPVR. APPROVAL		

NEXT ASSEMBLY

BROOKHAVEN NATIONAL LABORATORY
UPTON, N.Y. 11973

C-A CONTROLS WIRING DIAGRAM
A-TRAILER, CFE-AT-PS2
POWER SUPPLY PSUQ10/PSUQ11

SIZE D | DRAWING NUMBER 94028758 | REV. A

MATERIAL: ——— SCALE: NA WEIGHT: – SHEET 17 OF 30

1 *AUTOCAD

REV.	ZONE	ECN NO.	DATE	BY	CKR	APP.

ACS, BNL 11/18/99 4:56 PM 8758_18.dwg

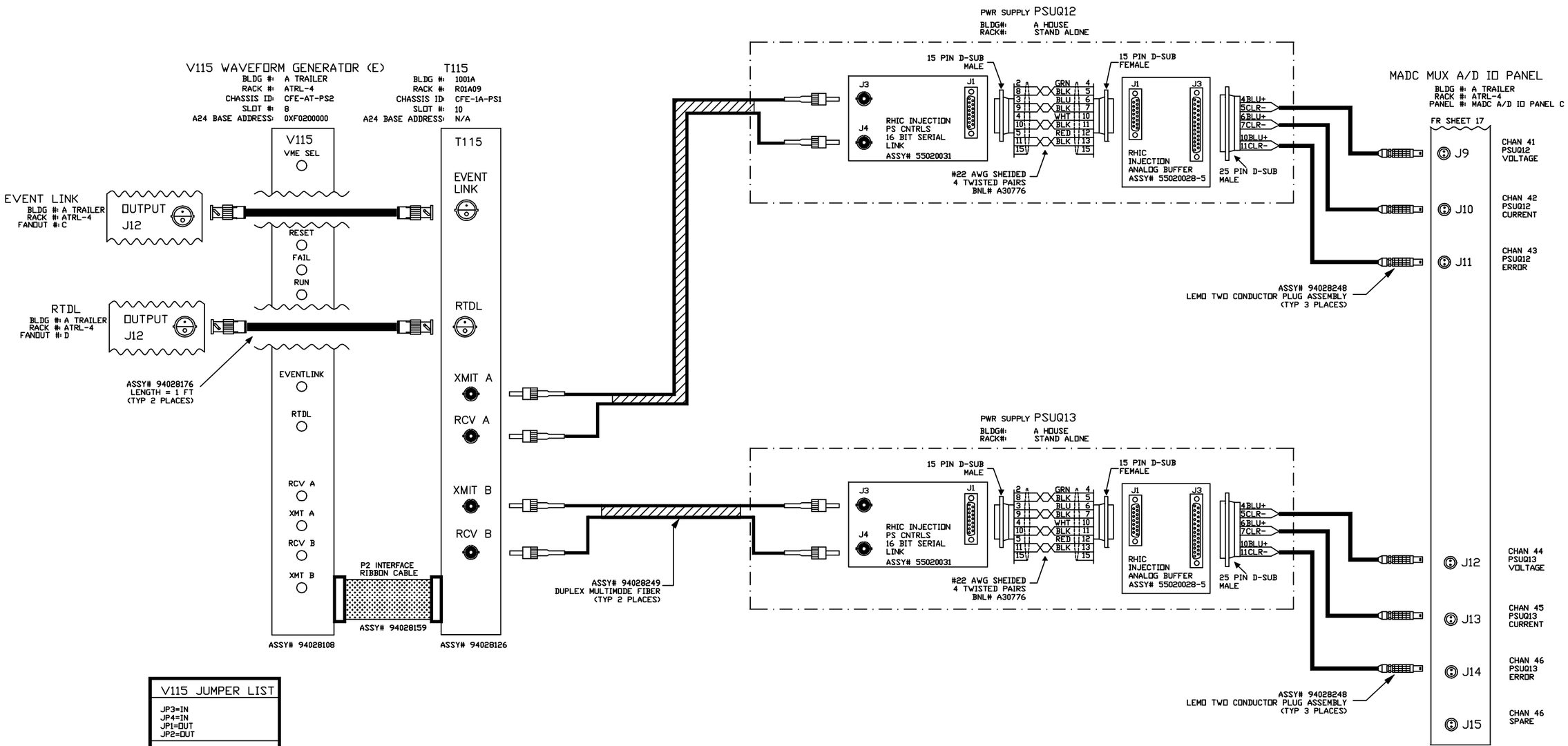

V115 JUMPER LIST
JP3=IN JP4=IN JP1=OUT JP2=OUT
A24 BASE ADDRESS JB1-A23=IN JB1-A22=IN JB1-A21=OUT JB1-A20=IN JB1-A19=IN JB1-A18=IN

-3	-2	-1	REF DESIGNATOR	ITEM NO.	DESCRIPTION	MAT'L DWG NO./BNL NO.
QTY REQD						

INTERPRET IN GENERAL ACCORDANCE WITH ASME Y14.24M-1989

UNLESS OTHERWISE SPECIFIED DIMENSIONS ARE IN INCHES

DECIMAL TOLERANCES
.X ±.030
.XX ±.015
.XXX ±.005
ANGULAR TOLERANCE
± .5°

NA FINISH

BREAK SHARP EDGES
MAX. XX MIN. XX

OUTSTANDING ECN

Q.A. CATEGORY A-3		DATE
DRAWN BY	Ed Koropsak	11/2/99
CHECKED BY		
DESIGN APPROVAL		
ENGINEER APPROVAL	R. MICHNOFF	11/2/99
SUPVR. APPROVAL		

NEXT ASSEMBLY

BROOKHAVEN NATIONAL LABORATORY
UPTON, N.Y. 11973

C-A CONTROLS WIRING DIAGRAM
A-TRAILER, CFE-AT-PS2
PWR SPLY PSUQ12/PSUQ13

SIZE D | DRAWING NUMBER 94028758 | REV. A

MATERIAL: ——— SCALE: NA WEIGHT: – SHEET 18 OF 30

*AUTOCAD

BNL, BNL 4/10/00 1:54 PM 8758_19.dwg

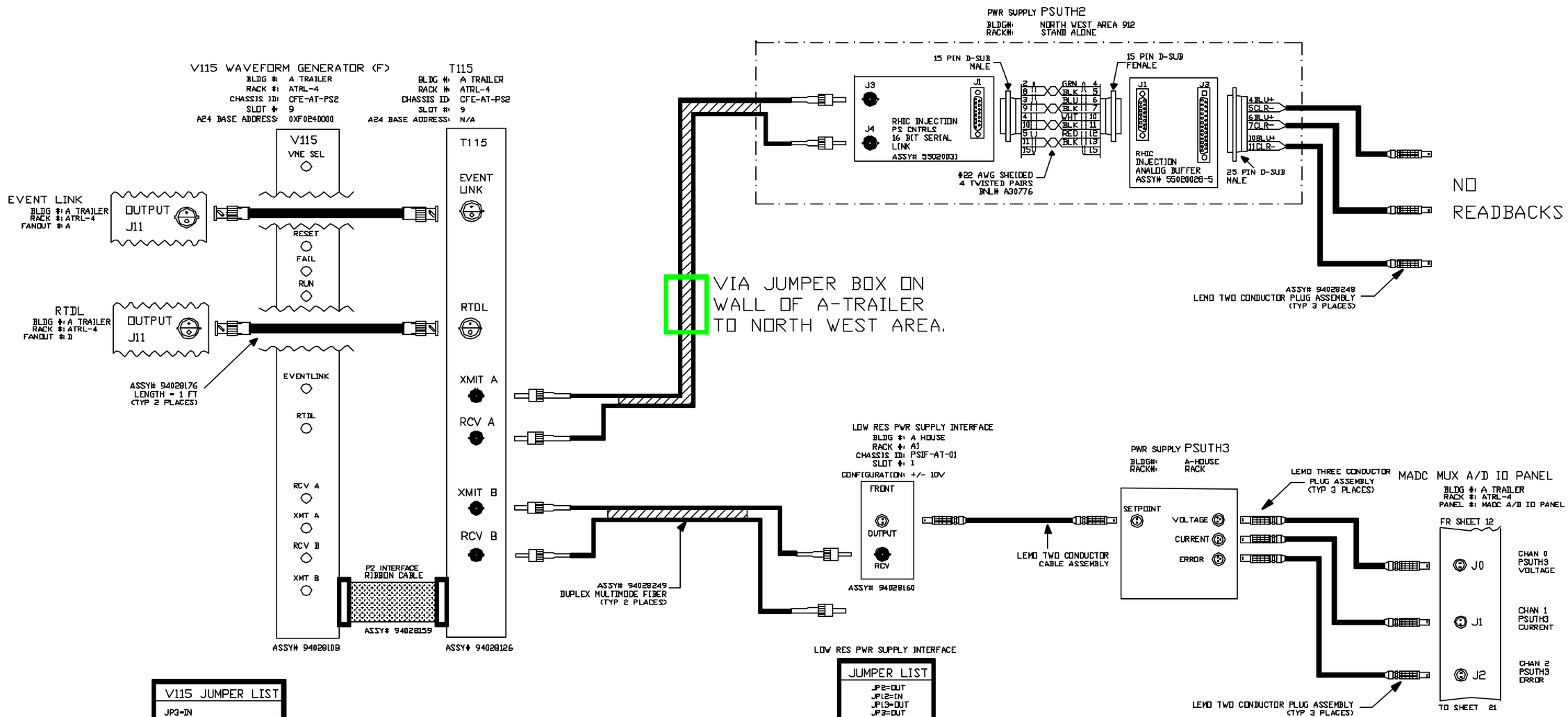

V115 JUMPER LIST
JP3=IN JP4=IN JP1=OUT JP2=OUT
A24 BASE ADDRESS J81-A23=IN J81-A22=IN J81-A21=OUT J81-A20=IN J81-A19=IN J81-A18=OUT

JUMPER LIST
JP2=OUT JP12=IN JP13=OUT JP3=OUT JP10=OUT JP1=IN JP4=IN JP6=IN JP7=IN JP14=OUT JP15=IN JP16=IN

-3	-2	-1	REF DESIGNATOR	ITEM NO	DESCRIPTION	WHTL DWG NO/BNL NO.
ANY NEED						

INTERPRET IN GENERAL ACCORDANCE WITH ASME Y14 24M-1989

UNLESS OTHERWISE SPECIFIED DIMENSIONS ARE IN INCHES
DECIMAL TOLERANCES
.X ±.030
.XX ±.015
.XXX ±.005
ANGULAR TOLERANCE ± .5°

OUTSTANDING ECN

NA FINISH

BREAK SHARP EDGES
MAX. XX MIN. XX

QA CATEGORY A-3		DATE
DRAWN BY	Ed Koropsak	11/2/99
CHECKED BY		
DESIGN APPROVAL		
ENGINEER APPROVAL	R. MICHNOFF	11/2/99
SUPVR. APPROVAL		
NEXT ASSEMBLY		

BROOKHAVEN NATIONAL LABORATORY
UPTON, N.Y. 11973

C-A CONTROLS WIRING DIAGRAM
A-TRAILER, CFE-AT-PS2

POWER SUPPLY PSUTH2/PSUTH3

SIZE D | DRAWING NUMBER 94028758 | REV. A

MATERIAL: ——— SCALE NA WEIGHT: — SHEET 79 OF 30

*AUTOCAD

ACS, BNL 11/19/99 11:10 AM 8758_20.dwg

REV.	ZONE	ECN NO.	DATE	BY	CKR	APP

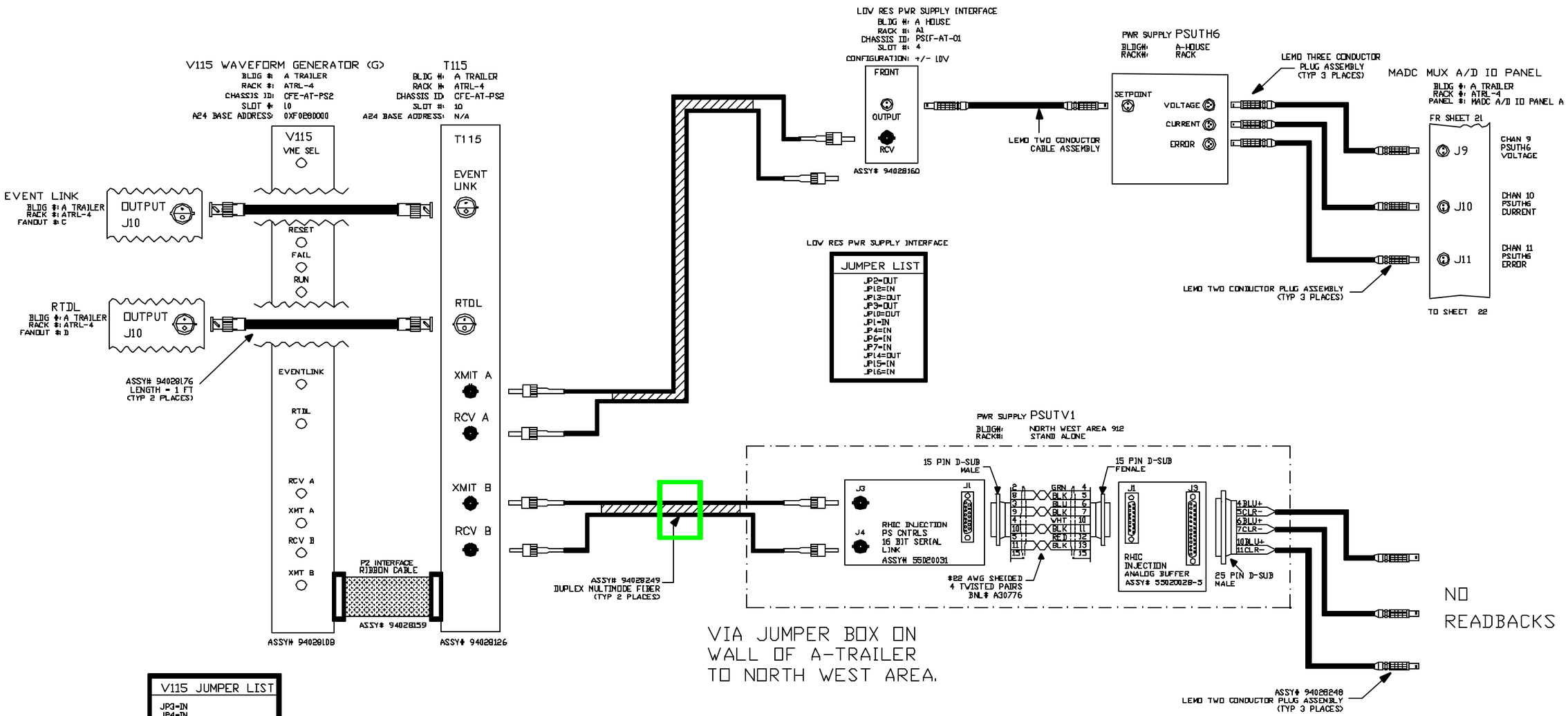

V115 JUMPER LIST
JP3=IN JP4=IN JP1=OUT JP2=OUT
A24 BASE ADDRESS JB1-A23=IN JB1-A22=IN JB1-A21=OUT JB1-A20=IN JB1-A19=OUT JB1-A18=IN

-3	-2	-1	REF DESIGNATOR	ITEM NO	DESCRIPTION	WHTL ENG NAL/BNL NAL
QTY REQD						

INTERPRET IN GENERAL ACCORDANCE WITH ASME Y14 24M-1989

UNLESS OTHERWISE SPECIFIED DIMENSIONS ARE IN INCHES
DECIMAL TOLERANCES
.X ±.030
.XX ±.015
.XXX ±.008
ANGULAR TOLERANCE ± .5°

NA FINISH

BREAK SHARP EDGES
MAX. XX MIN. XX

OUTSTANDING ECN

QA CATEGORY A-3		DATE
DRAWN BY	Ed Koropsak	11/2/99
CHECKED BY		
DESIGN APPROVAL		
ENGINEER APPROVAL	R. MICHNOFF	11/2/99
SUPVR. APPROVAL		

NEXT ASSEMBLY

BROOKHAVEN NATIONAL LABORATORY
UPTON, N.Y. 11973

C-A CONTROLS WIRING DIAGRAM
A-TRAILER, CFE-AT-PS2
PWRSPLY PSUTH6/PSUTV1

SIZE D — DRAWING NUMBER 94028758 — REV. A

MATERIAL: ——— SCALE NA WEIGHT: – SHEET 20 OF 30

1 *AUTOCAD

ACS, BNL 11/19/99 11:23 AM 8758_21.dwg

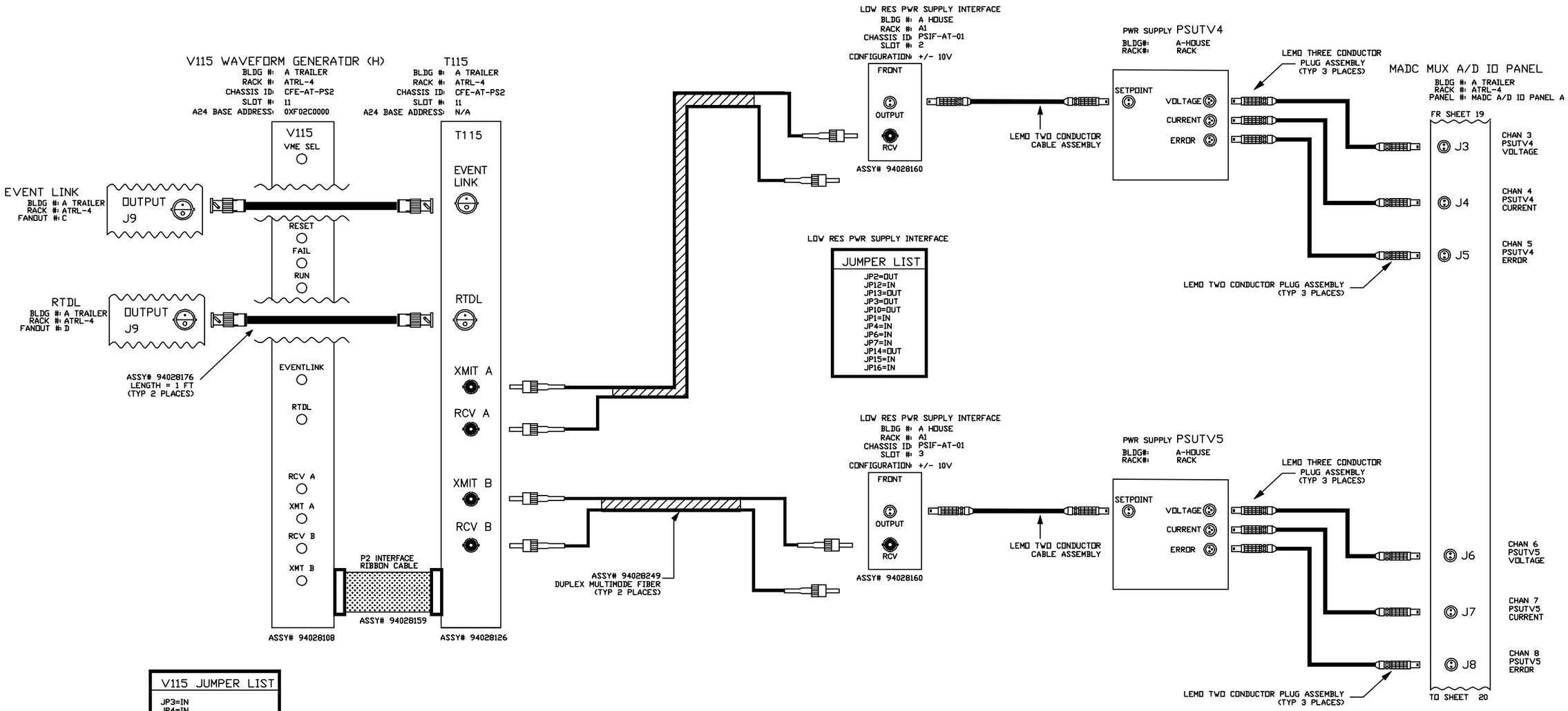

V115 JUMPER LIST
JP3=IN JP4=IN JP1=OUT JP2=OUT
A24 BASE ADDRESS JB1-A23=IN JB1-A22=IN JB1-A21=OUT JB1-A20=IN JB1-A19=OUT JB1-A18=OUT

-3	-2	-1	REF DESIGNATOR	ITEM NO.	DESCRIPTION	MAT'L. DWG NO./INL. NO.
QTY REQD						

INTERPRET IN GENERAL ACCORDANCE WITH ASME Y14.24M-1989

UNLESS OTHERWISE SPECIFIED DIMENSIONS ARE IN INCHES

DECIMAL TOLERANCES .X ±.030 .XX ±.015 .XXX ±.005

ANGULAR TOLERANCE ± .5°

OUTSTANDING ECN

NA FINISH

BREAK SHARP EDGES MAX. XX MIN. XX

Q.A. CATEGORY A-3		DATE
DRAWN BY	Ed Koropsak	11/2/99
CHECKED BY		
DESIGN APPROVAL		
ENGINEER APPROVAL	R. MICHNOFF	11/2/99
SUPVR. APPROVAL		

NEXT ASSEMBLY

BROOKHAVEN NATIONAL LABORATORY

UPTON, N.Y. 11973

C-A CONTROLS WIRING DIAGRAM

A-TRAILER, CFE-AT-PS2

PWR SPLY PSUTV4/PSUTV5

SIZE D — DRAWING NUMBER 94028758 — REV. A

MATERIAL: ——— SCALE: NA WEIGHT: – SHEET 21 OF 30

*AUTOCAD

PSUTV4

REV.	ZONE	ECN NO.	DATE	BY	CKR	APP.

ACS, BNL 11/19/99 11:33 AM 8758_22.dwg

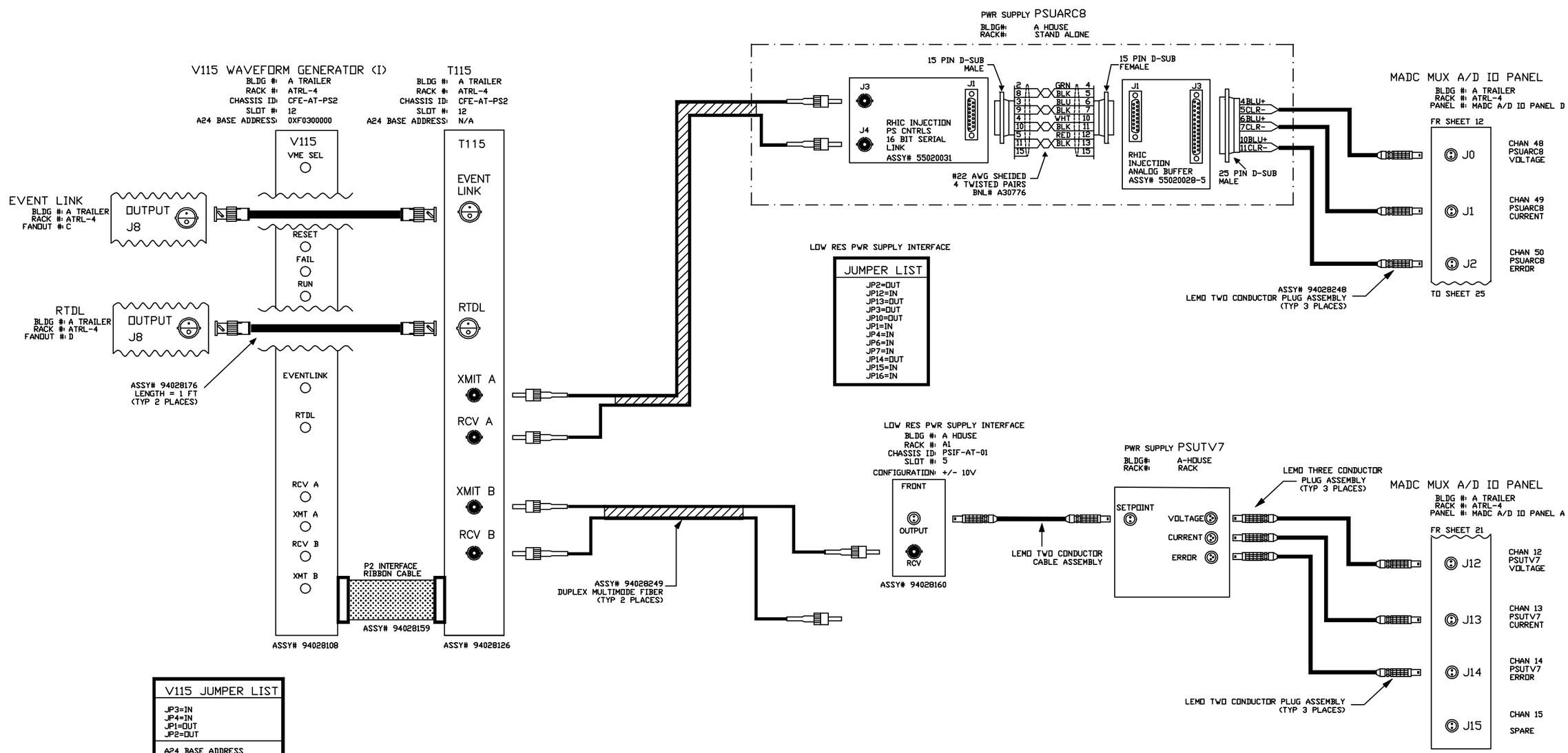

V115 JUMPER LIST

JP3=IN
JP4=IN
JP1=OUT
JP2=OUT

A24 BASE ADDRESS
JB1-A23=IN
JB1-A22=IN
JB1-A21=OUT
JB1-A20=OUT
JB1-A19=IN
JB1-A18=IN

-3	-2	-1	REF DESIGNATOR	ITEM NO.	DESCRIPTION	MAT'L DWG NO./BNL NO.
QTY REQD						

INTERPRET IN GENERAL ACCORDANCE WITH ASME Y14.24M-1989

UNLESS OTHERWISE SPECIFIED DIMENSIONS ARE IN INCHES

DECIMAL TOLERANCES
.X ±.030
.XX ±.015
.XXX ±.005
ANGULAR TOLERANCE ± .5°

OUTSTANDING ECN

NA FINISH

BREAK SHARP EDGES MAX. XX MIN. XX

Q.A. CATEGORY A-3		DATE	BROOKHAVEN NATIONAL LABORATORY
DRAWN BY	Ed Koropsak	11/2/99	UPTON, N.Y. 11973
CHECKED BY			C-A CONTROLS WIRING DIAGRAM
DESIGN APPROVAL			A-TRAILER, CFE-AT-PS2
ENGINEER APPROVAL	R. MICHNOFF	11/2/99	POWER SUPPLY PSUARC8/PSUTV7
SUPVR. APPROVAL			

NEXT ASSEMBLY

SIZE D — DRAWING NUMBER 94028758 — REV. A

MATERIAL: ——— SCALE: NA WEIGHT: – SHEET 22 OF 30

*AUTOCAD

PSUTV4

REV.	ZONE	ECN NO.	DATE	BY	CKR	APP.

ACS, BNL 11/19/99 11:35 AM 8758_23.dwg

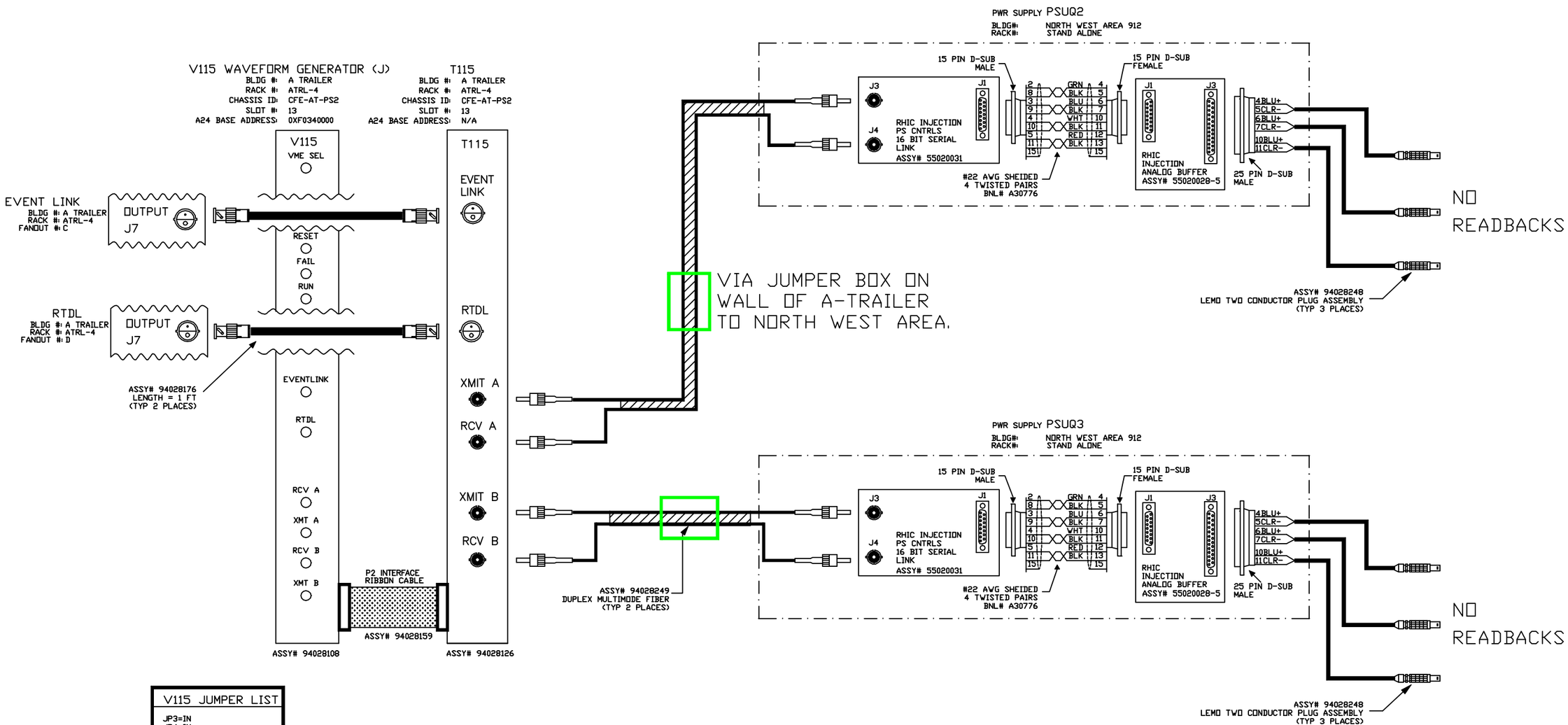

V115 JUMPER LIST
JP3=IN JP4=IN JP1=OUT JP2=OUT
A24 BASE ADDRESS JB1-A23=IN JB1-A22=IN JB1-A21=OUT JB1-A20=OUT JB1-A19=IN JB1-A18=OUT

-3	-2	-1	REF DESIGNATOR	ITEM NO.	DESCRIPTION	MAT'L DWG NO./BNL NO.
QTY REQD						

INTERPRET IN GENERAL ACCORDANCE WITH ASME Y14.24M-1989

UNLESS OTHERWISE SPECIFIED DIMENSIONS ARE IN INCHES

DECIMAL TOLERANCES
.X ±.030
.XX ±.015
.XXX ±.005
ANGULAR TOLERANCE
± .5°

NA FINISH

BREAK SHARP EDGES
MAX. XX MIN. XX

OUTSTANDING ECN

Q.A. CATEGORY A-3		DATE
DRAWN BY	Ed Koropsak	11/2/99
CHECKED BY		
DESIGN APPROVAL		
ENGINEER APPROVAL	R. MICHNOFF	11/2/99
SUPVR. APPROVAL		

NEXT ASSEMBLY

BROOKHAVEN NATIONAL LABORATORY
UPTON, N.Y. 11973

C-A CONTROLS WIRING DIAGRAM

A-TRAILER, CFE-AT-PS2

POWER SUPPLY PSUQ2/PSUQ3

SIZE D | DRAWING NUMBER 94028758 | REV. A

MATERIAL: ——— SCALE: NA WEIGHT: – SHEET 23 OF 30

*AUTOCAD

PSUTV4

REV.	ZONE	ECN NO.	DATE	BY	CKR	APP.

ACS, BNL 11/18/99 5:01 PM 8758_24.dwg

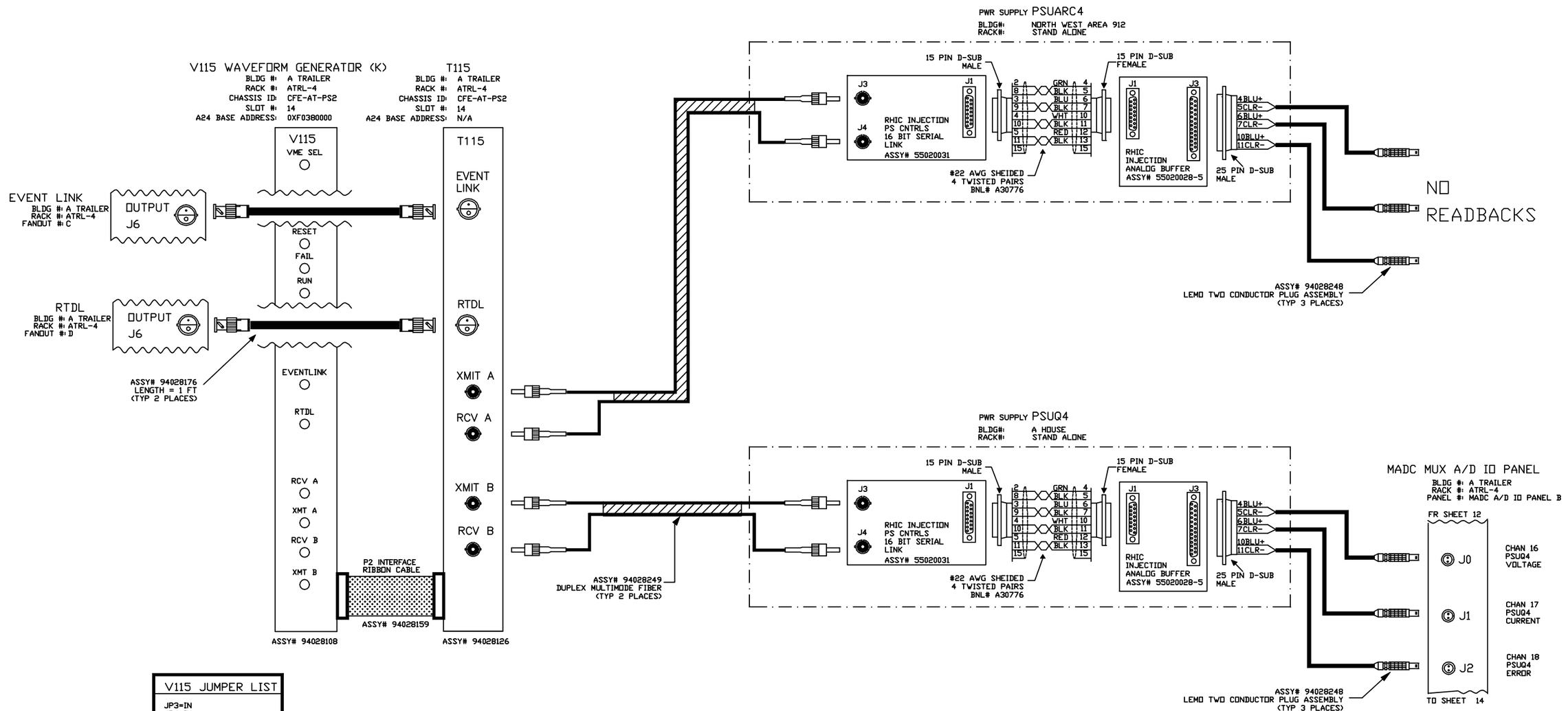

V115 JUMPER LIST
JP3=IN JP4=IN JP1=OUT JP2=OUT
A24 BASE ADDRESS JB1-A23=IN JB1-A22=IN JB1-A21=OUT JB1-A20=OUT JB1-A19=OUT JB1-A18=IN

-3	-2	-1	REF DESIGNATOR	ITEM NO.	DESCRIPTION	MAT'L DWG NO./BNL NO.
QTY REQD						

INTERPRET IN GENERAL ACCORDANCE WITH ASME Y14.24M-1989

UNLESS OTHERWISE SPECIFIED DIMENSIONS ARE IN INCHES

DECIMAL TOLERANCES
.X ±.030
.XX ±.015
.XXX ±.005
ANGULAR TOLERANCE
± .5°

FINISH: NA

BREAK SHARP EDGES MAX. XX MIN. XX

OUTSTANDING ECN

Q.A. CATEGORY A-3

		DATE
DRAWN BY	Ed Koropsak	11/2/99
CHECKED BY		
DESIGN APPROVAL		
ENGINEER APPROVAL	R. MICHNOFF	11/2/99
SUPVR. APPROVAL		

NEXT ASSEMBLY

BROOKHAVEN NATIONAL LABORATORY
UPTON, N.Y. 11973

C-A CONTROLS WIRING DIAGRAM

A-TRAILER, CFE-AT-PS2

POWER SUPPLY PSUARC4/PSUQ4

SIZE D — DRAWING NUMBER 94028758 — REV. A

MATERIAL: ——— SCALE: NA WEIGHT: – SHEET 24 OF 30

*AUTOCAD

REV.	ZONE	ECN NO.	DATE	BY	CKR	APP.

ACS, BNL 11/19/99 11:44 AM 8758_25.dwg

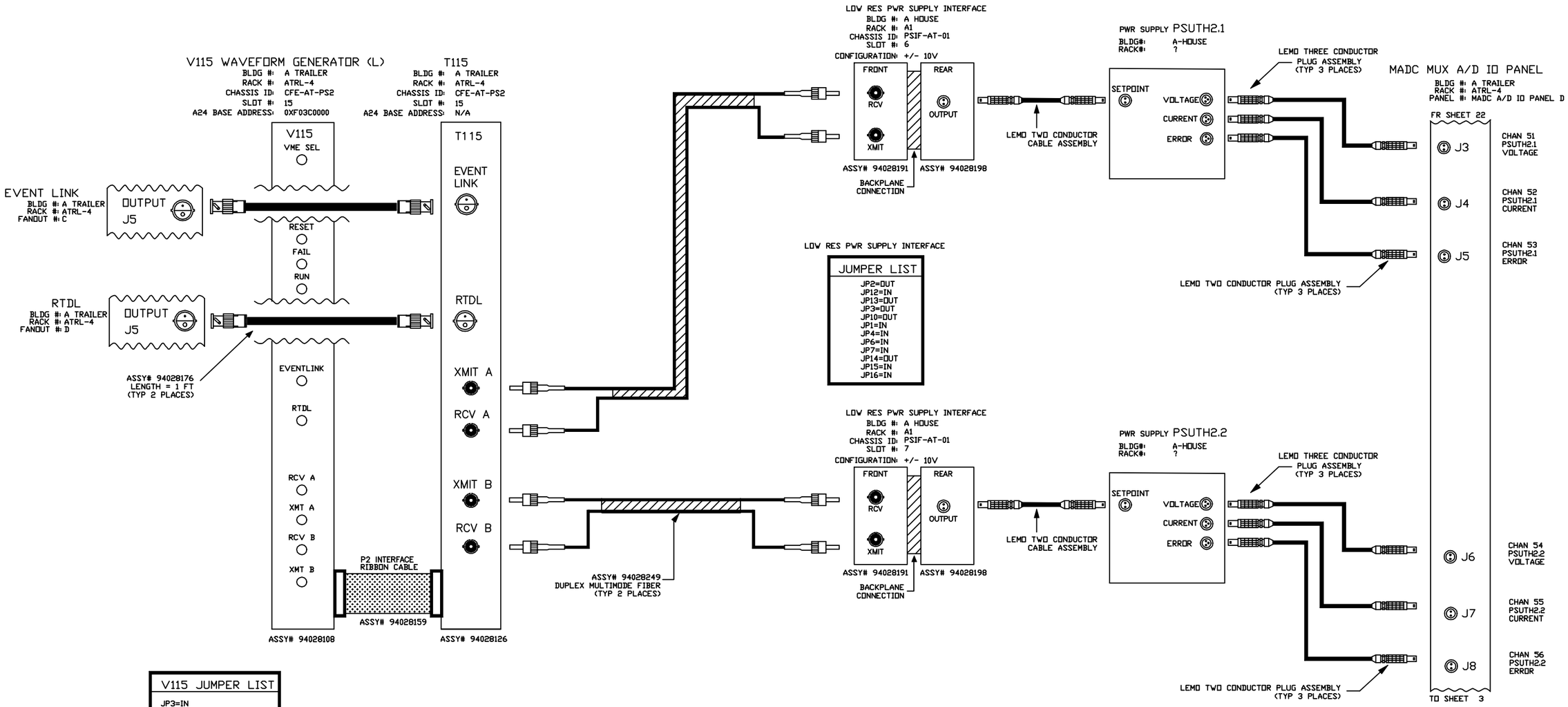

V115 JUMPER LIST
JP3=IN JP4=IN JP1=OUT JP2=OUT
A24 BASE ADDRESS JB1-A23=IN JB1-A22=IN JB1-A21=OUT JB1-A20=OUT JB1-A19=OUT JB1-A18=OUT

-3	-2	-1	REF DESIGNATOR	ITEM NO.	DESCRIPTION	MAT'L DWG NO./INL NO.
QTY REQD						

INTERPRET IN GENERAL ACCORDANCE WITH ASME Y14.24M-1989

UNLESS OTHERWISE SPECIFIED DIMENSIONS ARE IN INCHES

DECIMAL TOLERANCES
.X ±.030
.XX ±.015
.XXX ±.005
ANGULAR TOLERANCE
± .5°

NA FINISH

BREAK SHARP EDGES
MAX. XX MIN. XX

OUTSTANDING ECN

Q.A. CATEGORY A-3		DATE
DRAWN BY	Ed Koropsak	11/2/99
CHECKED BY		
DESIGN APPROVAL		
ENGINEER APPROVAL	R. MICHNOFF	11/2/99
SUPVR. APPROVAL		

NEXT ASSEMBLY

BROOKHAVEN NATIONAL LABORATORY
UPTON, N.Y. 11973

C-A CONTROLS WIRING DIAGRAM
A-TRAILER, CFE-AT-PS2
POWER SUPPLY PSUTH2.1/PSUTH2.2

SIZE D | DRAWING NUMBER 94028758 | REV. A

MATERIAL: ——— SCALE: NA WEIGHT: – SHEET 25 OF 30

1 *AUTOCAD

REV.	ZONE	ECN NO.	DATE	BY	CKR	APP.

ACS, BNL 11/18/99 3:59 PM 8758_26.dwg

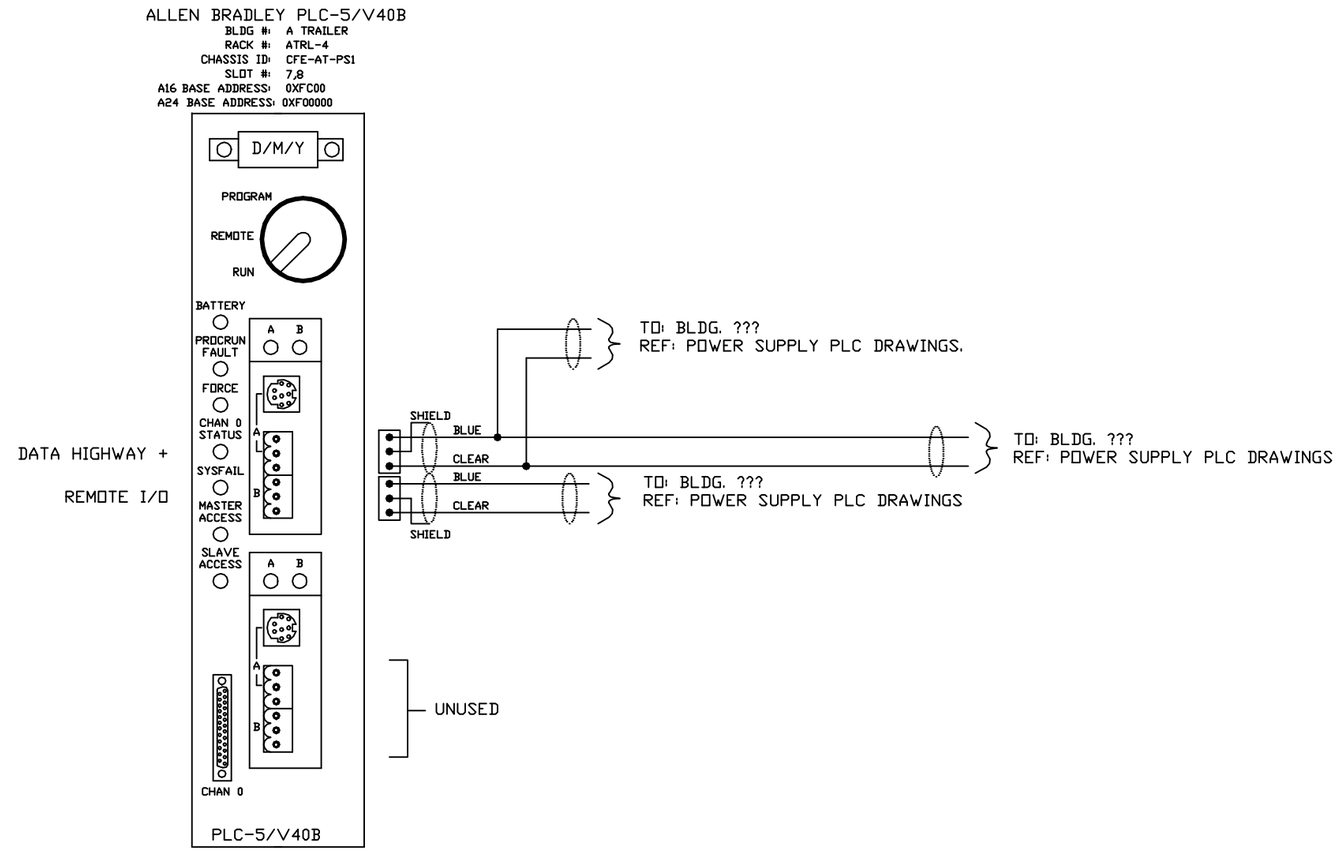

-3	-2	-1	REF DESIGNATOR	ITEM NO.	DESCRIPTION	MAT'L DWG NO.,BNL NO.
QTY REQD						

INTERPRET IN GENERAL ACCORDANCE WITH ASME Y14.24M-1989

UNLESS OTHERWISE SPECIFIED DIMENSIONS ARE IN INCHES

DECIMAL TOLERANCES
.X ±.030
.XX ±.015
.XXX ±.005
ANGULAR TOLERANCE
± .5°

NA FINISH

BREAK SHARP EDGES
MAX. XX MIN. XX

OUTSTANDING ECN

Q.A. CATEGORY A-3		DATE
DRAWN BY	Ed Koropsak	11/18/99
CHECKED BY		
DESIGN APPROVAL		
ENGINEER APPROVAL	R. MICHNOFF	11/18/99
SUPVR. APPROVAL		

NEXT ASSEMBLY

BROOKHAVEN NATIONAL LABORATORY
UPTON, N.Y. 11973

RHIC CONTROLS WIRING DIAGRAM

BLDG. A TRAILER, VME CHASSIS CFE-AT-PS1

ALLEN BRADLEY VME PLC-5

SIZE D

DRAWING NUMBER 94028758

REV. A

MATERIAL: ——— SCALE: NA WEIGHT: – SHEET 26 OF 30

*AUTOCAD

REV.	ZONE	ECN NO.	DATE	BY	CKR	APP.

ACS, BNL 11/19/99 11:46 AM 8758_27.dwg

OMS MOTOR CONTROLLER

BLDG #:	A TRAILER
RACK #:	ATRL-4
CHASSIS ID:	CFE-AT-PS1
SLOT #:	9
A16 BASE ADDRESS:	0XFC40

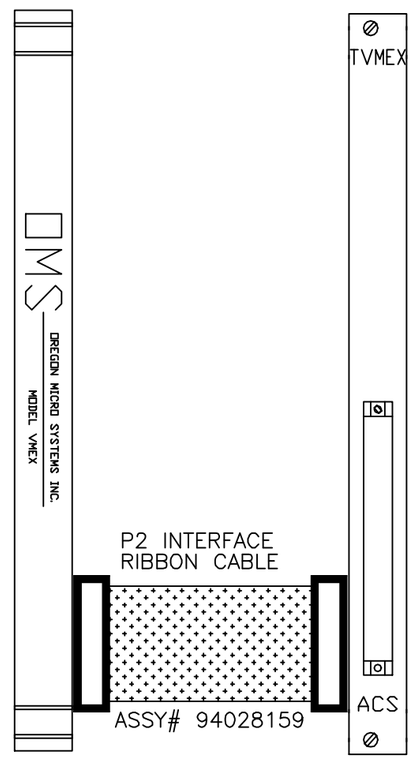

-3	-2	-1	REF DESIGNATOR	ITEM NO.	DESCRIPTION	MATL. DWG NO.,BNL NO.
QTY REQD						

INTERPRET IN GENERAL ACCORDANCE WITH ASME Y14.24M-1989

UNLESS OTHERWISE SPECIFIED DIMENSIONS ARE IN INCHES

DECIMAL TOLERANCES
.X ±.030
.XX ±.015
.XXX ±.005
ANGULAR TOLERANCE
± .5°

OUTSTANDING ECN

NA FINISH

BREAK SHARP EDGES
MAX. XX MIN. XX

Q.A. CATEGORY A-3		DATE
DRAWN BY	Ed Koropsak	11/18/99
CHECKED BY		
DESIGN APPROVAL		
ENGINEER APPROVAL	R. MICHNOFF	11/18/99
SUPVR. APPROVAL		

NEXT ASSEMBLY

BROOKHAVEN NATIONAL LABORATORY
UPTON, N.Y. 11973

RHIC CONTROLS WIRING DIAGRAM

BLDG. A TRAILER, VME CHASSIS CFE-AT-PS1

OMS MOTOR CONTROLLER

SIZE D | DRAWING NUMBER 94028758 | REV. A

MATERIAL: ——— SCALE: NA WEIGHT: – SHEET 27 OF 30

*AUTOCAD

BNL, BNL 4/10/00 2:09 PM 8758_28.dwg

U,V,W LINE SYSTEM

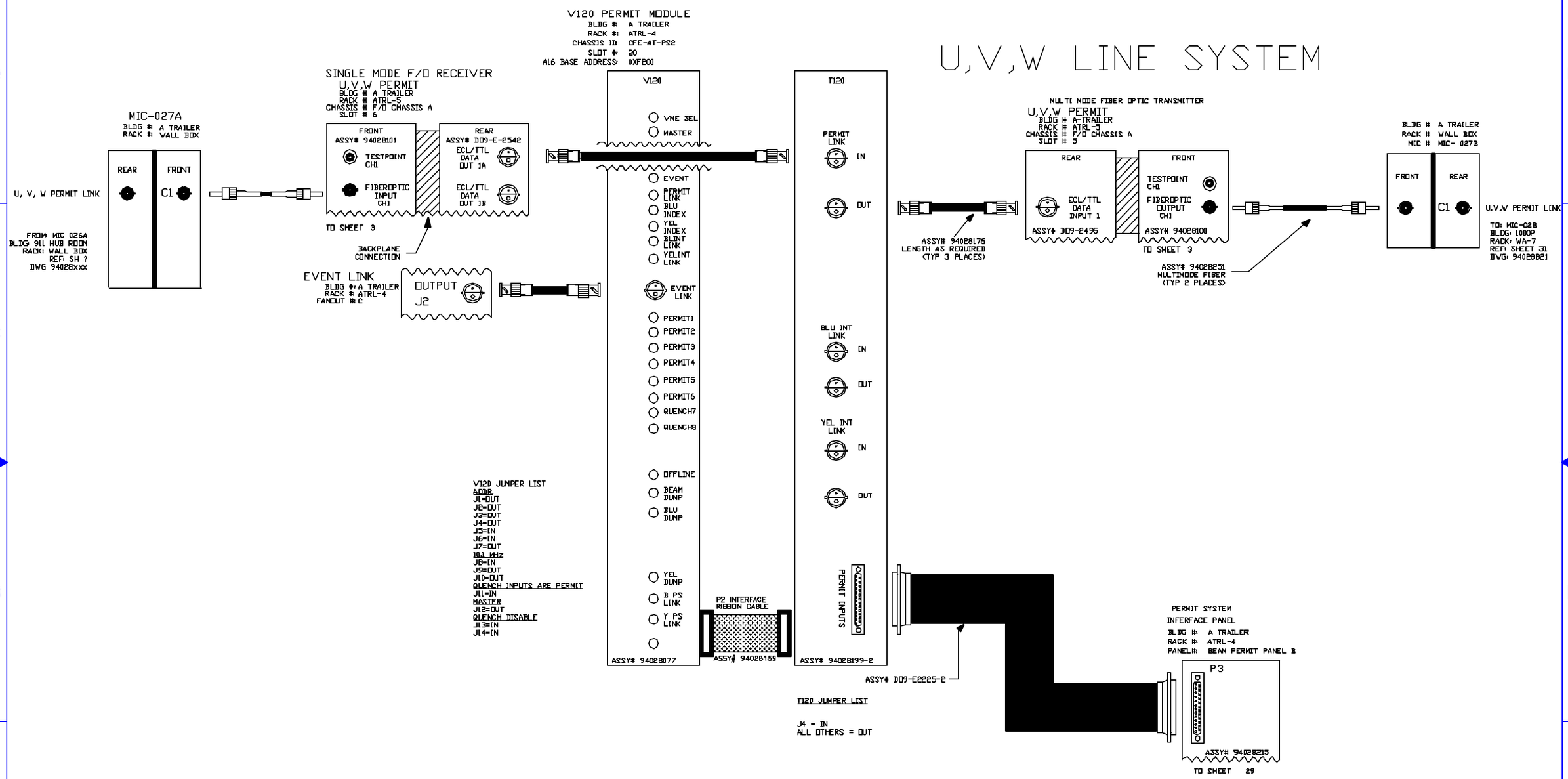

REV.	ZONE	ECN NO.	DATE	BY	CKR	APP.

-3	-2	-1	REF REDRAWER	ITEM NO	DESCRIPTION	MAT'L DWG NO./INL NO.
DIV ASSD						

INTERPRET IN GENERAL ACCORDANCE WITH ASME Y14.24M-1989

UNLESS OTHERWISE SPECIFIED DIMENSIONS ARE IN INCHES
DECIMAL TOLERANCES
.X ±.030
.XX ±.015
.XXX ±.005
ANGULAR TOLERANCE ± .5°

NA FINISH

BREAK SHARP EDGES
MAX XX MIN XX

OUTSTANDING ECN

QA CATEGORY A-3		DATE
DRAWN BY	Ed Koropsak	4/6/00
CHECKED BY		
DESIGN APPROVAL		
ENGINEER APPROVAL	R. MICHNOFF	4/6/00
SUPVR. APPROVAL		

NEXT ASSEMBLY

BROOKHAVEN NATIONAL LABORATORY
UPTON, N.Y. 11973

RHIC CONTROLS WIRING DIAGRAM
A TRAILER, CHASSIS CFE-AT-PS2
V120/T120 PERMIT SYSTEM

SIZE D | 94028758 | REV A
DRAWING NUMBER

MATERIAL ——— | SCALE NA | WEIGHT: – | SHEET 28 OF 30

1 *AUTOCAD

REV.	ZONE	ECN NO.	DATE	BY	CKR	APP.

BNL, BNL 4/10/00 2:17 PM 8758_29.dwg

PERMIT SYSTEM INTERFACE MODULE

BLDG #: A TRAILER
RACK #: ATRL-4
PANEL #: PERMIT I/F PANEL B

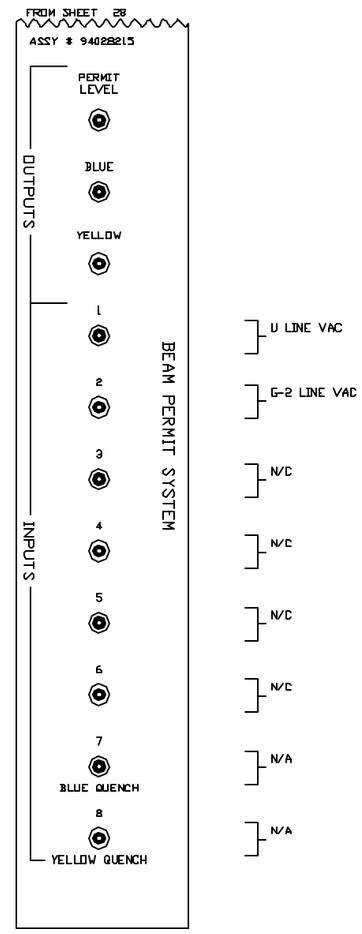

-3	-2	-1	REF DESIGNATOR	ITEM NO	DESCRIPTION	MAT'L SPEC NO./INL NO.
DAT REQD						

INTERPRET IN GENERAL ACCORDANCE WITH ASME Y14.24M-1989

UNLESS OTHERWISE SPECIFIED DIMENSIONS ARE IN INCHES

DECIMAL TOLERANCES
.X ±.030
.XX ±.015
.XXX ±.005
ANGULAR TOLERANCE
± .5°

OUTSTANDING ECN

NA
FINISH

BREAK SHARP EDGES
MAX XX MIN XX

QA CATEGORY A-3		DATE
DRAWN BY	Ed Koropsak	4/6/00
CHECKED BY		
DESIGN APPROVAL		
ENGINEER APPROVAL	R. MICHNOFF	4/8/00
SUPVR. APPROVAL		

NEXT ASSEMBLY

BROOKHAVEN NATIONAL LABORATORY
UPTON, N.Y. 11973

RHIC CONTROLS WIRING DIAGRAM
A TRAILER RACK ATRL-4

PERMIT SYSTEM INTERFACE PANEL

SIZE D
DRAWING NUMBER 94028758
REV A

MATERIAL ——— SCALE NA WEIGHT: – SHEET 29 OF 30

1 *AUTOCAD

REV.	ZONE	ECN NO.	DATE	BY	CKR	APP.

ACS, BNL 11/18/99 5:34 PM 8758_30.dwg

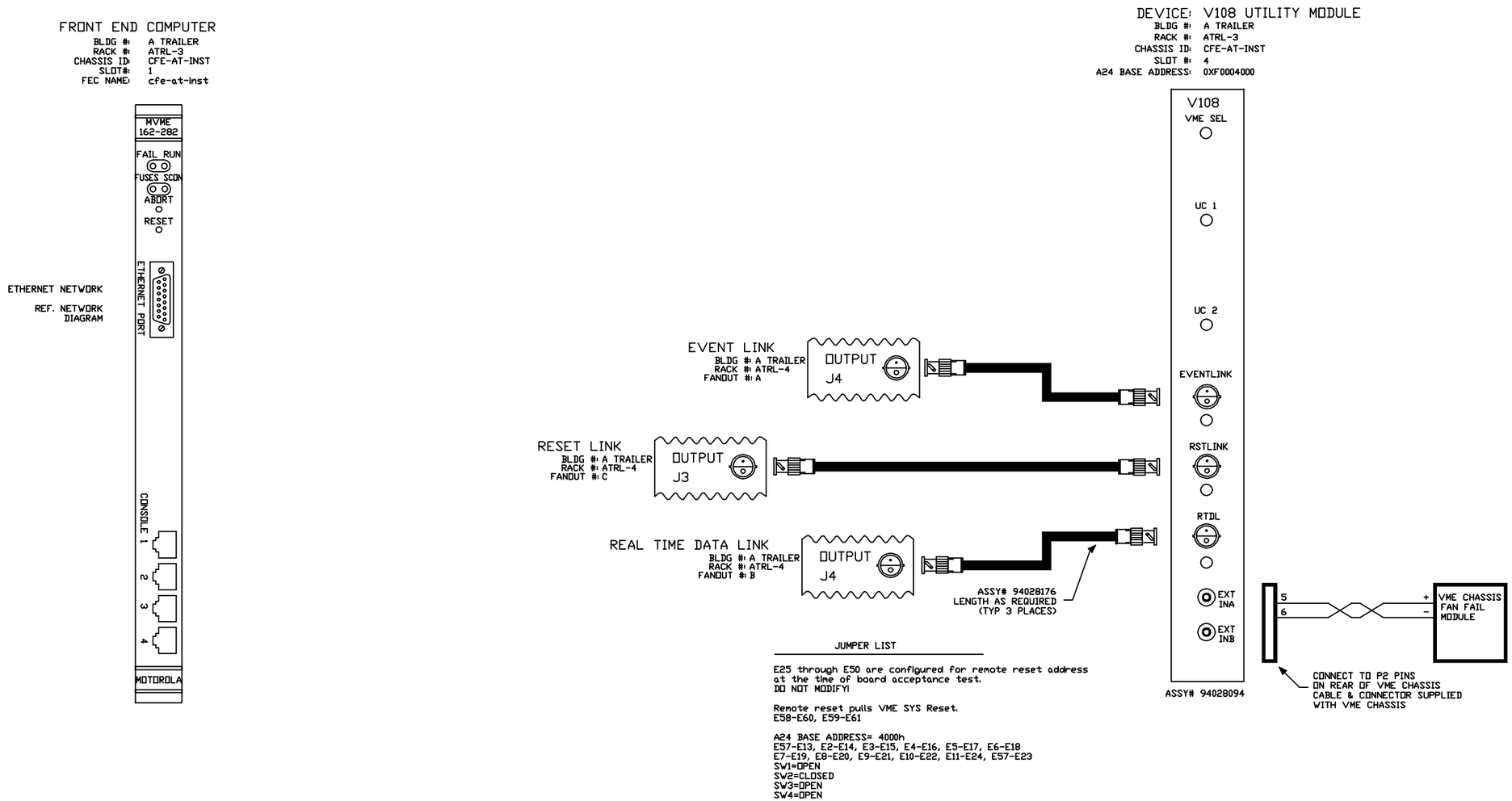

JUMPER LIST

E25 through E50 are configured for remote reset address at the time of board acceptance test.
DO NOT MODIFY!

Remote reset pulls VME SYS Reset.
E58-E60, E59-E61

A24 BASE ADDRESS= 4000h
E57-E13, E2-E14, E3-E15, E4-E16, E5-E17, E6-E18
E7-E19, E8-E20, E9-E21, E10-E22, E11-E24, E57-E23
SW1=OPEN
SW2=CLOSED
SW3=OPEN
SW4=OPEN

-3	-2	-1	REF DESIGNATOR	ITEM NO.	DESCRIPTION	MAT'L DWG NO./INL NO.
QTY REQD						

INTERPRET IN GENERAL ACCORDANCE WITH ASME Y14.24M-1989	Q.A. CATEGORY A-3	DATE	BROOKHAVEN NATIONAL LABORATORY
	DRAWN BY Ed Koropsak	11/2/99	UPTON, N.Y. 11973
UNLESS OTHERWISE SPECIFIED DIMENSIONS ARE IN INCHES	CHECKED BY		C-A CONTROLS WIRING DIAGRAM
DECIMAL TOLERANCES .X ±.030 .XX ±.015 .XXX ±.005 ANGULAR TOLERANCE ± .5°	DESIGN APPROVAL		A-TRAILER, VME CHASSIS CFE-AT-INST
	ENGINEER APPROVAL R. MICHNOFF	11/2/99	FT END COMP/V108 MODULE
	SUPVR. APPROVAL		SIZE D — 94028758 — REV. A
NA FINISH	BREAK SHARP EDGES MAX. XX MIN. XX	NEXT ASSEMBLY	DRAWING NUMBER
OUTSTANDING ECN			MATERIAL: ——— SCALE: NA WEIGHT: – SHEET 30 OF 30

*AUTOCAD