REV.	ZONE	ECN NO.	DATE	BY	CKR	APP.

CONTROLS- 8/14/01 11:25 AM rack.dwg

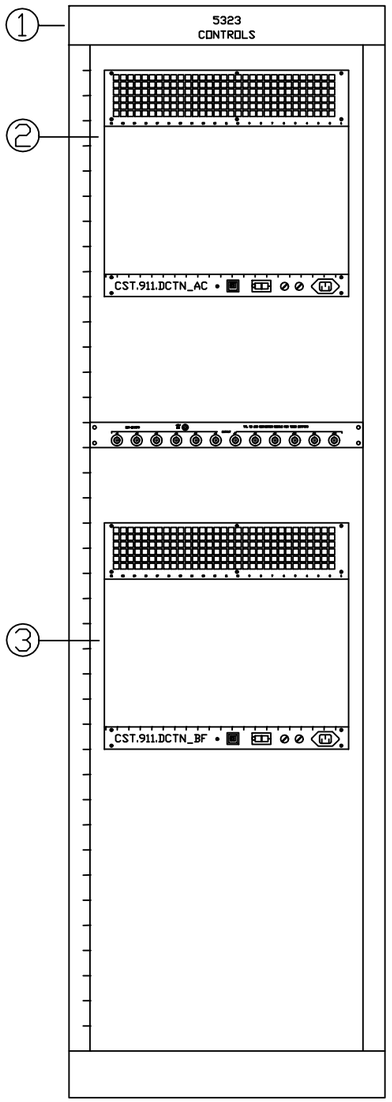

REAR VIEW

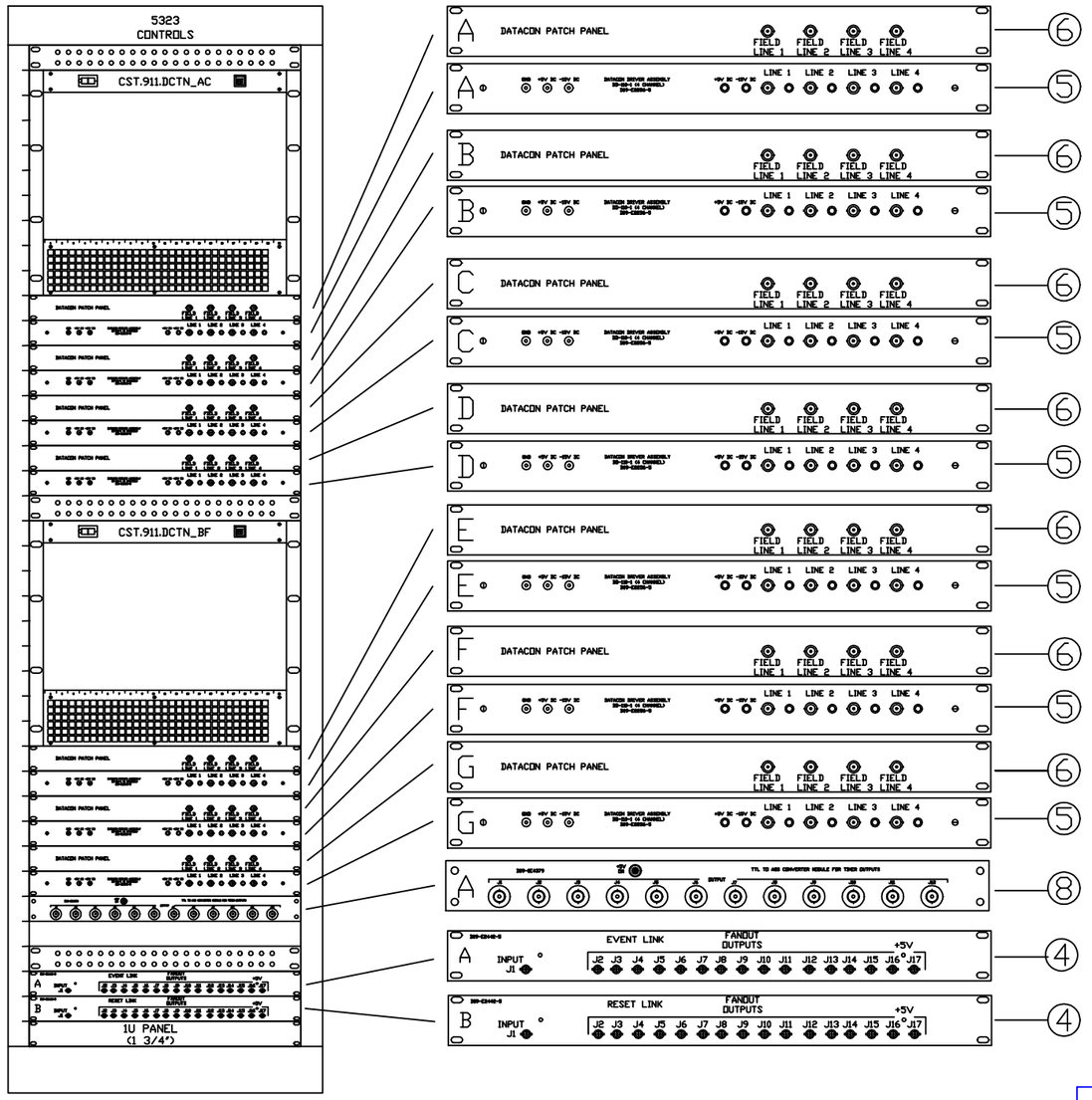

FRONT VIEW

QTY REQD -3	QTY REQD -2	QTY REQD -1	REF DESIGNATOR	ITEM NO.	DESCRIPTION	MAT'L DWG NO./BNL NO.
		AR	PANELS	8	10-32 x 1/2" BINDING HEAD MACHINE SCREWS	T-32276
		1	N/A	9	1U x 19" BLANK PANEL (PREMIER METAL ARP-119-553)	
		2	A,B	8	TTL TO AGS CONVERTER	DD9-E4379
		3	NA	7	GROMMET PANEL	94028410
		7	NA	6	DATACON PATCH PANEL	
		7	NA	5	DD-110-1 DATACON DRIVER ASSEMBLY	D09-E2256-5
		2	A,B	4	FANOUT ASSEMBLY	D09-E2442
		1	NA	3	VME CHASSIS CST.911.DCTN_BF	
		1	NA	2	VME CHASSIS CST.911.DCTN_AC	
		1	NA	1	19" RACK, 70 H RACK SPACE	

INTERPRET IN GENERAL ACCORDANCE WITH ASME Y14.24M-1989

UNLESS OTHERWISE SPECIFIED DIMENSIONS ARE IN INCHES

DECIMAL TOLERANCES
.X ±.030
.XX ±.015
.XXX ±.005
ANGULAR TOLERANCE
± .5°

FINISH: NA

BREAK SHARP EDGES
MAX. XX MIN. XX

OUTSTANDING ECN

Q.A. CATEGORY A-3

		DATE
DRAWN BY	PAPE	05/11/01
CHECKED BY		
DESIGN APPROVAL		
ENGINEER APPROVAL		
SUPVR. APPROVAL		

NEXT ASSEMBLY

BROOKHAVEN NATIONAL LABORATORY
UPTON, N.Y. 11973

C-A CONTROLS

911B

DATACON CENTRAL RACK ASSEMBLY

SIZE D

DRAWING NUMBER

REV. A

MATERIAL: ——— SCALE: FULL WEIGHT: – SHEET 1 of 13

*AUTOCAD

REV.	ZONE	ECN NO.	DATE	BY	CKR	APP.

CONTROLS- 5/22/01 1:49 PM CST_911_DCTN_AC.dwg

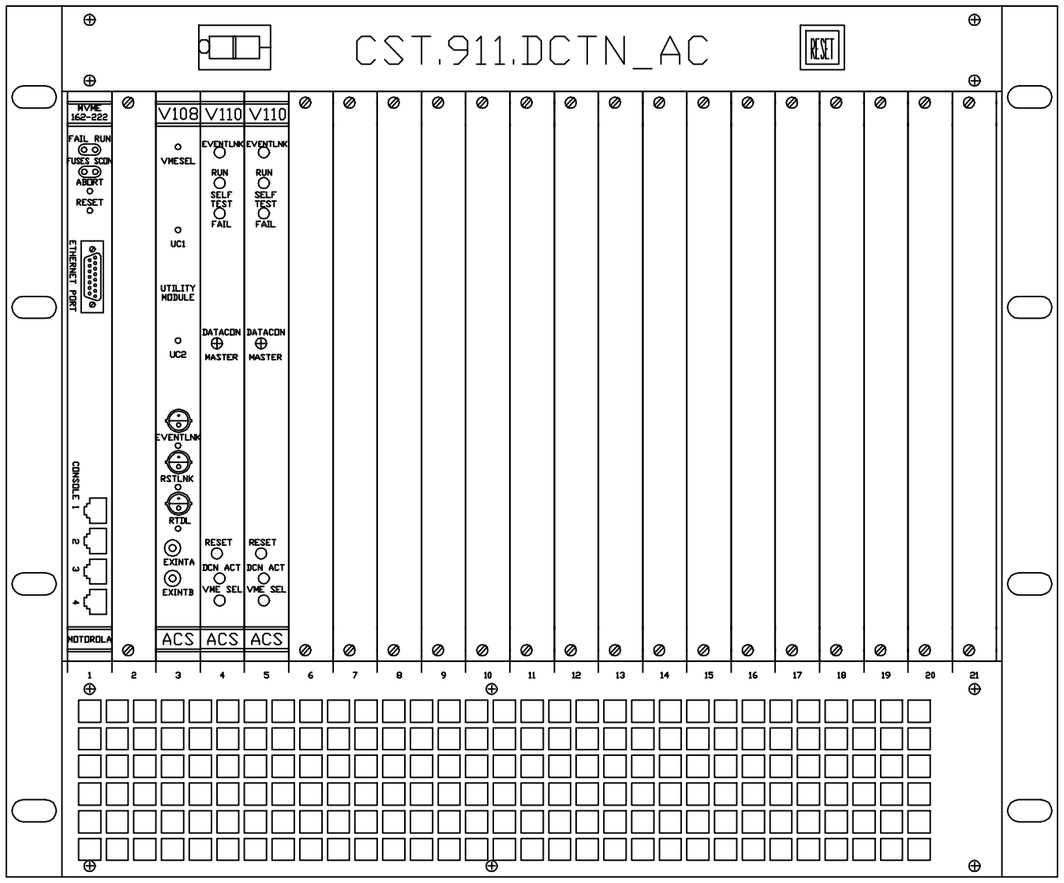

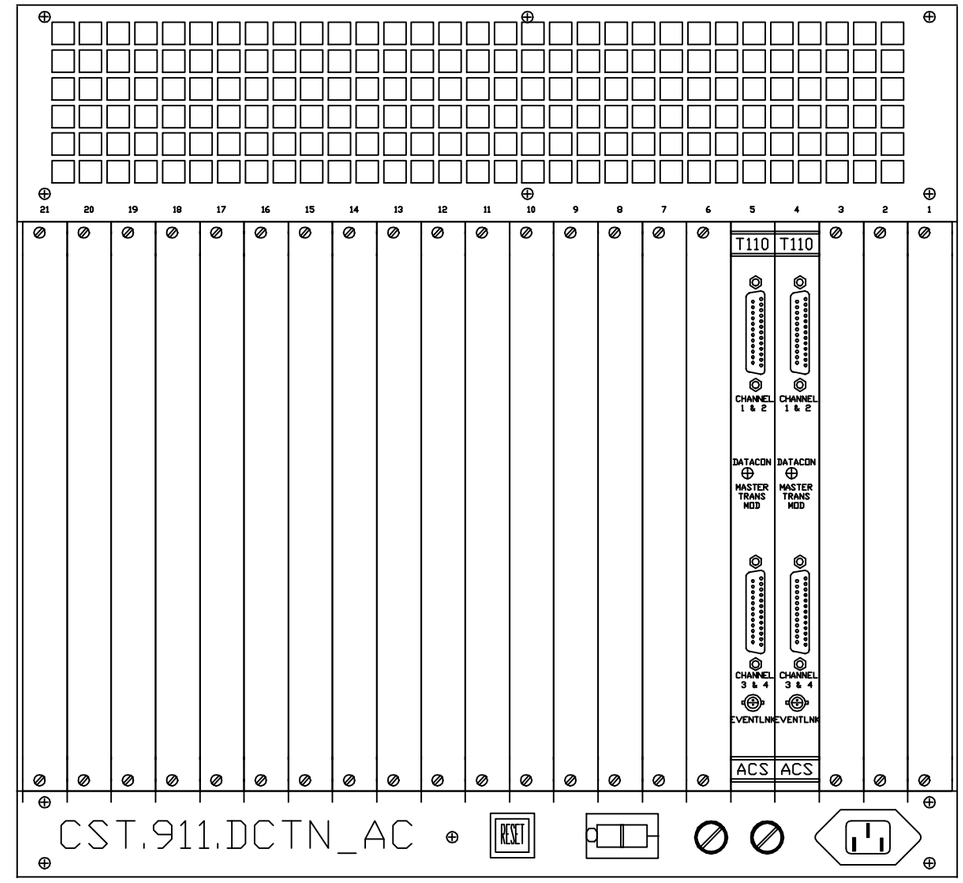

-3	-2	-1	REF DESIGNATOR	ITEM NO.	DESCRIPTION	MAT'L DWG NO.,BNL NO.
		X	X	X	X	X
		36	SEE NOTE 1	7	6U x 4HP BLANK PANEL (ELECTOR-SPACE ESFE-2985)	
		2	SLOT 4R,5R	6	P110 P2 BUFFER TRANSITION MODULE	DD9-E2223-5
		2	SLOT 4R,5R	5	T110 DATACON MASTER TRANSITION MODULE	DD9-E2249-5
		2	SLOT 4,5	4	V110 DATACON MASTER	DD9-E2314-5
		1	SLOT 3	3	V108 UTILITY MODULE	94028094
		1	SLOT 1	2	MOTOROLA FRONT END COMPUTER	MVME 162-222
		1	N/A	1	VME CHASSIS	RHIC -93008000

QTY REQD

INTERPRET IN GENERAL ACCORDANCE WITH ASME Y14.24M-1989

UNLESS OTHERWISE SPECIFIED DIMENSIONS ARE IN INCHES

DECIMAL TOLERANCES
.X ±.030
.XX ±.015
.XXX ±.005
ANGULAR TOLERANCE ± .5°

OUTSTANDING ECN

NA FINISH

BREAK SHARP EDGES MAX. XX MIN. XX

Q.A. CATEGORY A-3		DATE
DRAWN BY	PAPE	05/11/01
CHECKED BY		
DESIGN APPROVAL		
ENGINEER APPROVAL		
SUPVR. APPROVAL		

NEXT ASSEMBLY

BROOKHAVEN NATIONAL LABORATORY
UPTON, N.Y. 11973
C-A CONTROLS
911B RACK 5323
VME CHASSIS CST.911.DCTN_AC

SIZE D | DRAWING NUMBER | REV. A

MATERIAL: ——— SCALE: FULL WEIGHT: – SHEET 2 of 13

*AUTOCAD

REV.	ZONE	ECN NO.	DATE	BY	CKR	APP.

CONTROLS- 8/14/01 11:24 AM CST_911_DTCN_BF.dwg

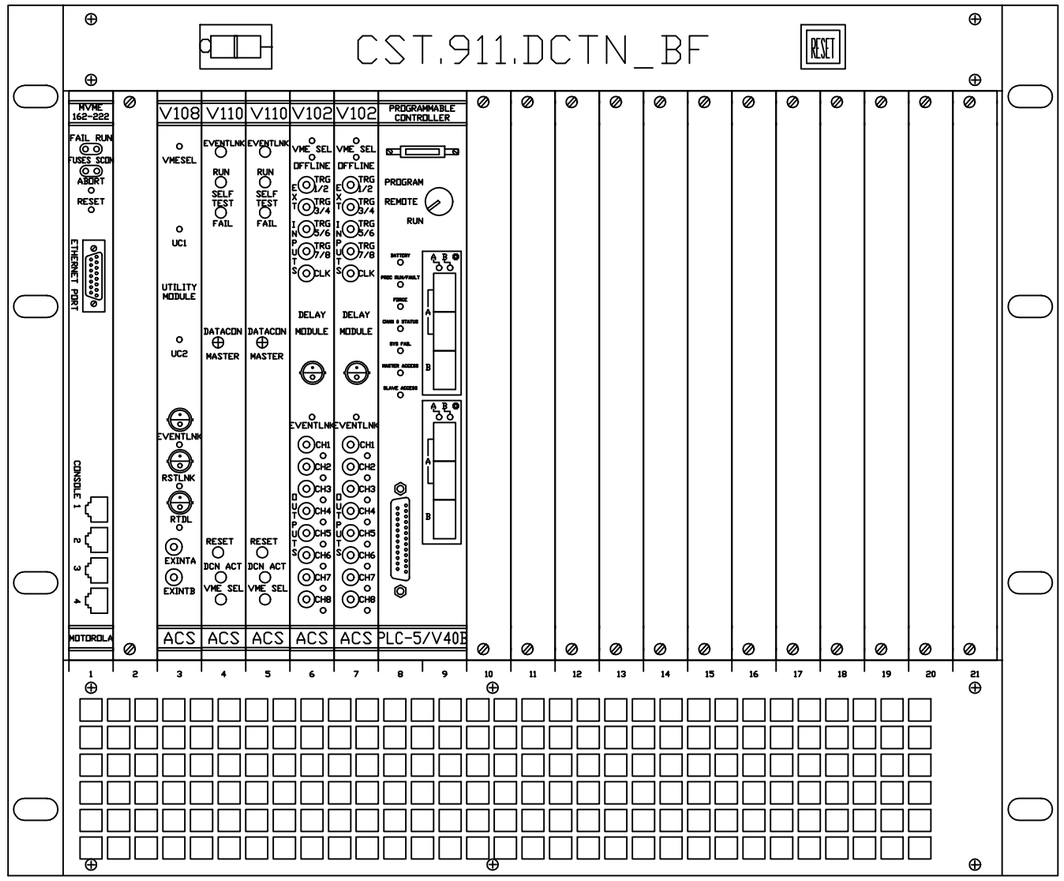

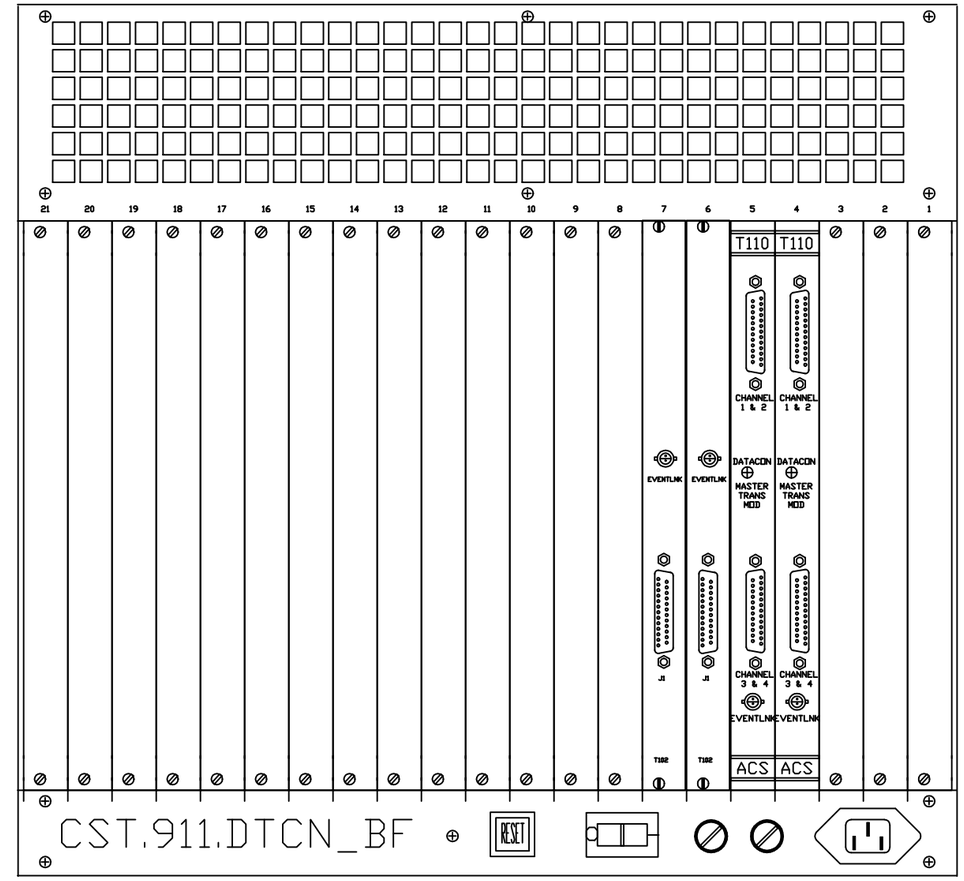

NOTES:
1: ALL UNUSED SLOTS FRONT AND REAR

QTY REQD -3	QTY REQD -2	QTY REQD -1	REF DESIGNATOR	ITEM NO.	DESCRIPTION	MAT'L DWG NO.,BNL NO.
		1	SLOT 8,9	10	ALLEN BRADLY PLC5-	
		1	SLOT 6R,7R	9	T102 TRANSITION MODULE	
		34	SEE NOTE 1	8	6Ux4HP VME BLANK PANEL	
		2	SLOT 4R,5R	7	P110 P2 BUFFER TRANSITION MODLUE	D09-E2223-5
		1	SLOT 6,7	6	V102 DELAY MODULE	94028070
		2	SLOT 4R,5R	5	T110 DATACON MASTER TRANSITION MODULE	D09-E2249-5
		2	SLOT 4,5	4	V110 DATACON MASTER	D09-E2314-5
		1	SLOT 3	3	V108 UTILITY MODULE	94028094
		1	SLOT 1	2	MOTOROLA FRONT END COMPUTER	MVM162-222
		1	N/A	1	VME CHASSIS	RHIC-9300800

INTERPRET IN GENERAL ACCORDANCE WITH ASME Y14.24M-1989

UNLESS OTHERWISE SPECIFIED DIMENSIONS ARE IN INCHES

DECIMAL TOLERANCES
.X ±.030
.XX ±.015
.XXX ±.005
ANGULAR TOLERANCE
± .5°

FINISH: NA

BREAK SHARP EDGES MAX. XX MIN. XX

OUTSTANDING ECN

Q.A. CATEGORY A-3

DRAWN BY	PAPE	05/11/01
CHECKED BY		
DESIGN APPROVAL		
ENGINEER APPROVAL		
SUPVR. APPROVAL		

NEXT ASSEMBLY

BROOKHAVEN NATIONAL LABORATORY
UPTON, N.Y. 11973

C-A CONTROLS

911B RACK 5323

VME CHASSIS CST.911.DCTN_BF

SIZE D

DRAWING NUMBER

REV. A

MATERIAL: ——— SCALE: FULL WEIGHT: – SHEET 3 of 13

*AUTOCAD