C-A Controls 6/9/03 3:54 PM ps_connector.dwg

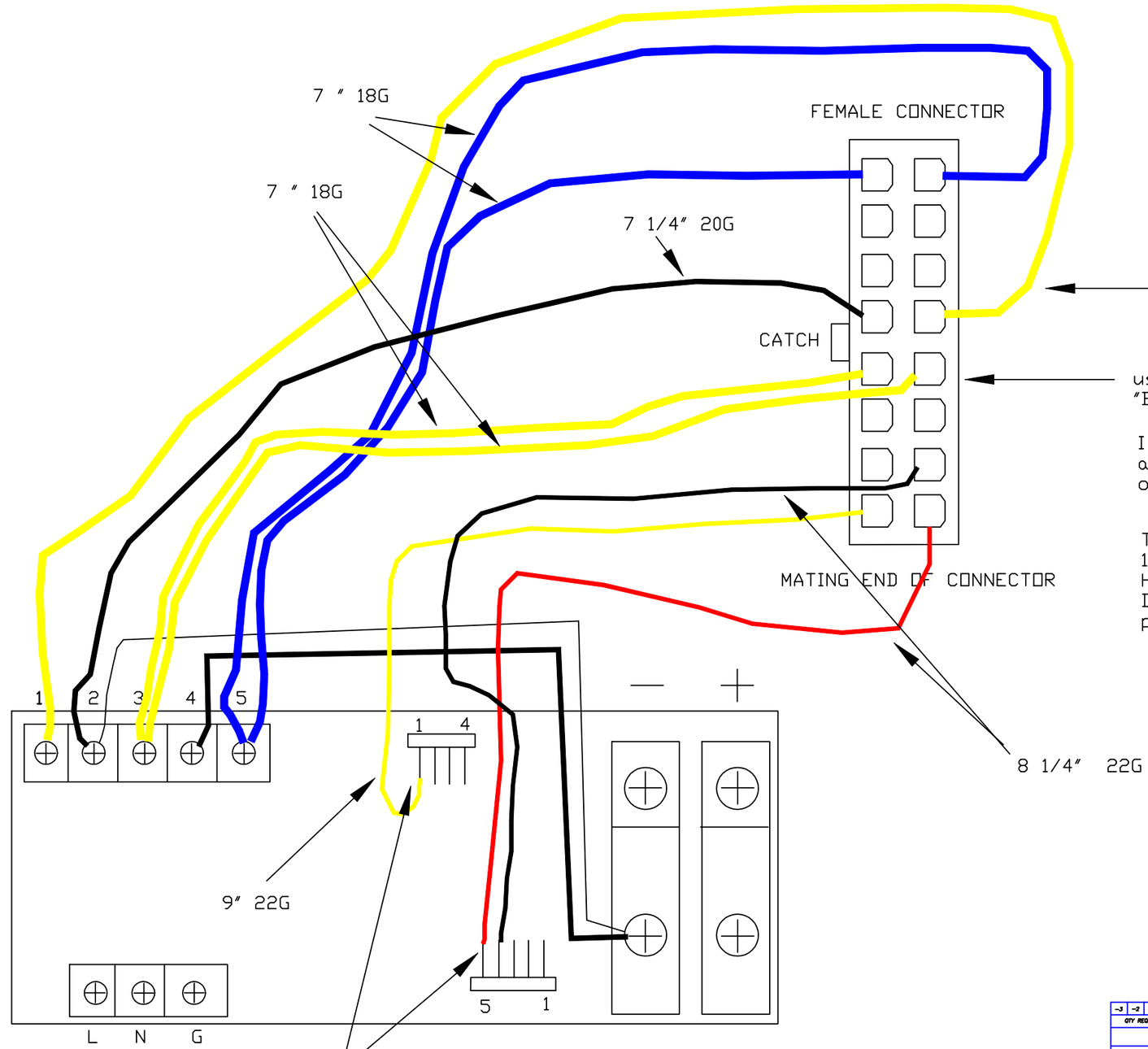

use 8522-B crimper "A" smaller wires
"B" for larger wires

I used Molex pins 0039000079
and Molex pins 39-00-0039
on connector housing Molex 0039012165

The extractor tool is
11-03-0044 rev d ct
HT60630B Extraction tool
DIGI-KEY tool hand extraction mini-fit jr
part # WM9918

use 8429 G crimper 24-20 on pins.
DIGI-KEY pt # A3005ND contacts (24-20),
manf no 87046-4 and for the housing use a
AMP 87499-1 and cut it down to size

REV.	ZONE	ECN NO.	DATE	BY	CKR	APP.

-3	-2	-1	REF DESIGNATOR	ITEM NO.	DESCRIPTION	MAT'L DWG NO./BNL NO.
QTY REQD						

INTERPRET IN GENERAL ACCORDANCE WITH ASME Y14.24M-1989
UNLESS OTHERWISE SPECIFIED DIMENSIONS ARE IN INCHES
DECIMAL TOLERANCES .X ± .XX ± .XXX ± ANGULAR TOLERANCE ±
NA FINISH
BREAK SHARP EDGES MAX. XX MIN. XX
OUTSTANDING ECN

Q.A. CATEGORY		DATE
DRAWN BY	Warren Jappe	6/9/03
CHECKED BY		
DESIGN APPROVAL		
ENGINEER APPROVAL		
SUPVR. APPROVAL		

NEXT ASSEMBLY

BROOKHAVEN NATIONAL LABORATORY
UPTON, N.Y. 11973

Power Supply connector
For VME chassis power supplies

SIZE | DRAWING NUMBER | REV.
MATERIAL: | SCALE: | WEIGHT: | SHEET

*AUTOCAD