AGS Accelerator Controls Section
Bldg 911B Wiring Diagrams

Brookhaven National Laboratory, Upton, New York 11973

Created By: John Pepe
Last Updated 9/07/04 by Ed Koropsak

Power Distribution
- ✍ Rack 5466 (Sheet 1A)
- ✍ Rack 5466 Layout (Sheet 1C)

Links Fanouts
- ✍ Supercycle (Sheet 4a)
- ✍ AGS Event Link (Sheet 17,17a)
- ✍ RHIC RTDL Link (Sheet 23b)
- ✍ RHIC Event Link (Sheet 23c)
- ✍ Injector RTDL (Sheet 24)
- ✍ Beam Sync Yellow (Sheet 38a)
- ✍ Beam Sync Blue (Sheet 39a)
- ✍ Reset Link (Sheet 43,43a)

VME Chassis AGS_RT_TIME modules (sheet 2)
- ✍ V194 Fanout Modules (Sheet 5, 5A, 5B)
- ✍ V192/V193 Booster Extraction Startgate (Real Time) (Sheet 6)
- ✍ V194 Fanout Module 2 (Sheet 7)
- ✍ V196 Timeout Decoder Mod 1 (Supercycle Trigger) (Sheet 8)
- ✍ V196 Timeout Decoder Mod 2 (Supercycle Trigger) (Sheet 9)
- ✍ V196 Timeout Decoder Mod 3 (Booster Trigger) (Sheet 10)
- ✍ V198 Timeline Trig/Buffer Module and Attached T198 Transitional Module (Sheet 11)
- ✍ V197 Timeline Trigger Module 1 (Sheet 12)
- ✍ V197 Timeline Trigger Module 2 (Sheet 13)
- ✍ V197 Timeline Trigger Module 3 (Sheet 14)
- ✍ V197 Timeline Trigger Module 4 (Sheet 15)

VME Chassis CST.911B.AGS_EVLNK(Eventlink) modules (sheet 3)
- ✍ Front End Computer, V108 Utility (Sheet 16)
- ✍ V100 Output Encoder & AGS EVLNK Fanout Mod (Sheet 17,17a)
- ✍ V101 Event Input Modules 0 - 3 (Sheet 18)
- ✍ V101 Event Input Modules 4 - 7 (Sheet 19)
- ✍ V101 Event Input Modules 8 - B (Sheet 20)
- ✍ V101 Event Input Modules C - F (Sheet 21)

VME Chassis CFE-911B-RTDL1 (sheet 4)
- ✍ Front End Computer, V108 Utility (Sheet 22)
- ✍ V104 RHIC Decoder and Attached T102 Modules (Sheet 23)
- ✍ V102 RHIC Delay Module (Sheet 23A)
- ✍ V104 RHIC Decoder (Sheet 23D)
- ✍ V202 AGS Time Line Decoder (Sheet 23E)
- ✍ V105 RTDL Encoder/Input Module (Sheet 24)
- ✍ V106 RTDL Input Module (Sheet 25) NOT USED
- ✍ V107 Injector Time Stamp Module (Sheet 25.1)
- ✍ V132 Gauss Generator (Sheet 26)
- ✍ V197 Gauss Clock Module 1 (Sheet 27)
- ✍ V197 Gauss Clock Module 2 (Sheet 28)
- ✍ V197 Gauss Clock Module 3 (Sheet 29)
- ✍ V197 Gauss Clock Module 4 (Sheet 30)

VME Chassis CFE-911-RES modules (sheet 31)
- ✍ Front End Computer, V108 Utility (Sheet 31.1)
- ✍ V194 Fanout Module 1 (Sheet 32)
- ✍ V187 FEB Bunch Signal Conditioner (Sheet 32.5)
- ✍ V126 Fill Request Selection Module (Sheet 33)
- ✍ V194 Fanout Module 2 (Sheet 34)
- ✍ V120 ATR PERMIT SYSTEM (Sheet 35)
- ✍ Permit System Interface Panel (Sheet 36)
- ✍ V120 U,V,W PERMIT SYSTEM (Sheet 37)
- ✍ Permit System Interface Panel (Sheet 38)
- ✍ V124 Beam Sync Yellow (Sheet 39)
- ✍ V124 Beam Sync Blue (Sheet 40)
- ✍ V189 ECL to TTL (Sheet 41)
- ✍ V102 RHIC Delay Module (Sheet 42)
- ✍ V103 Reset Link Encoder (Sheet 43)
- ✍ V112 Event link Monitors (Sheet 44)

REV.	ZONE	ECN NO.	DATE	BY	CKR	APP.

ACS, BNL 3/24/00 9:02 AM ags_powerdist.dwg

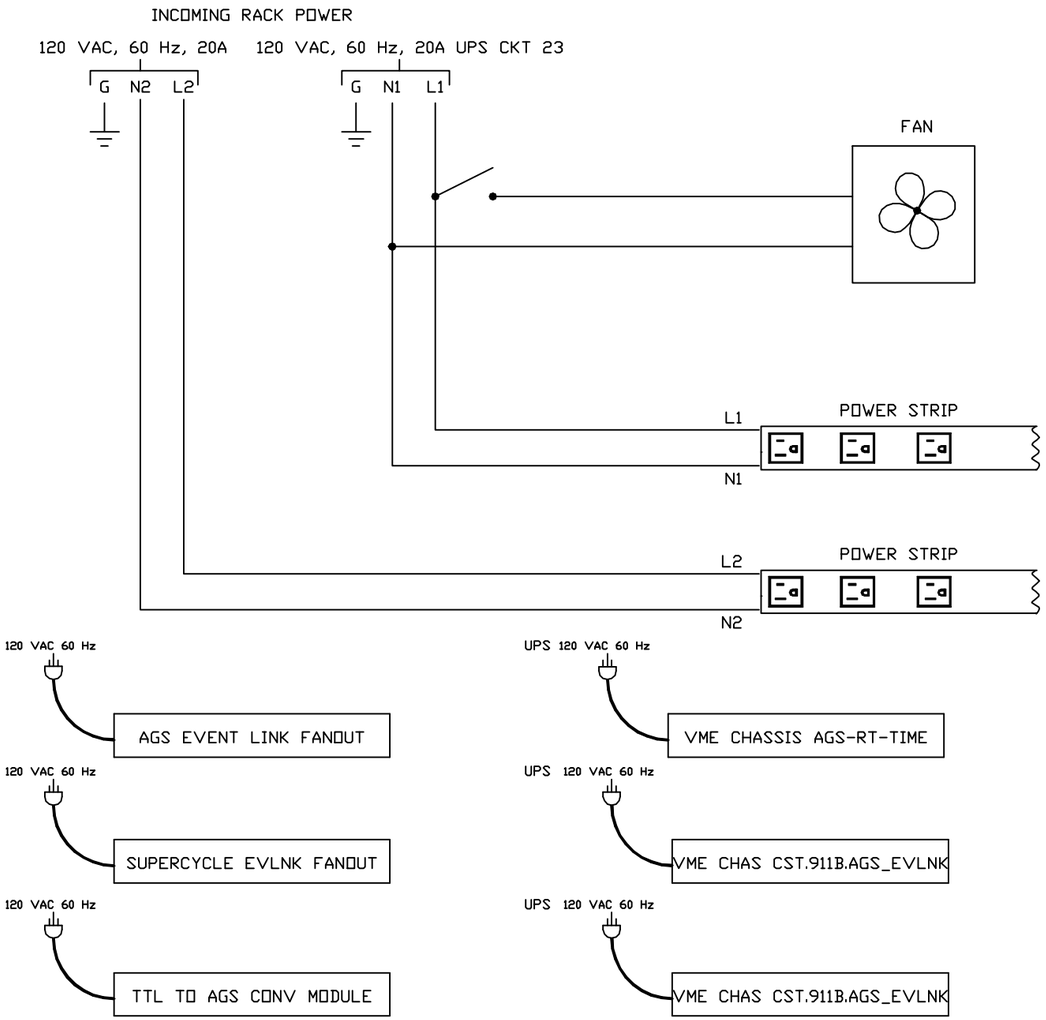

NOTE: ALL 120 VAC, 60 Hz POWER CORDS
PLUG INTO POWER STRIP OUTLETS

RACK 5466

-3	-2	-1	QTY REQD	REF DESIGNATOR	ITEM NO.	DESCRIPTION	MATL DWG NO./BNL NO.

INTERPRET IN GENERAL ACCORDANCE WITH ASME Y14.24M–1989

UNLESS OTHERWISE SPECIFIED DIMENSIONS ARE IN INCHES

DECIMAL TOLERANCES
.X ±.030
.XX ±.015
.XXX ±.005
ANGULAR TOLERANCE ± .5°

OUTSTANDING ECN

NA FINISH

BREAK SHARP EDGES MAX. XX MIN. XX

NEXT ASSEMBLY

Q.A. CATEGORY A–3	DATE	
DRAWN BY J PEPE	3/23/2000	
CHECKED BY		
DESIGN APPROVAL		
ENGINEER APPROVAL		
SUPVR. APPROVAL		

BROOKHAVEN NATIONAL LABORATORY
UPTON, N.Y. 11973

AGS CONTROLS WIRING DIAGRAM
BLDG. 911B RACK 5466

AGS TIMING POWER DISTRIBUTION

SIZE D | DRAWING NUMBER | REV. A

MATERIAL: ——— | SCALE: NA | WEIGHT: – | SHEET 1 A

*AUTOCAD

REV.	ZONE	ECN NO.	DATE	BY	CKR	APP.

Controls, C-AD 4/9/2004 1:12 PM ags_rack.dwg

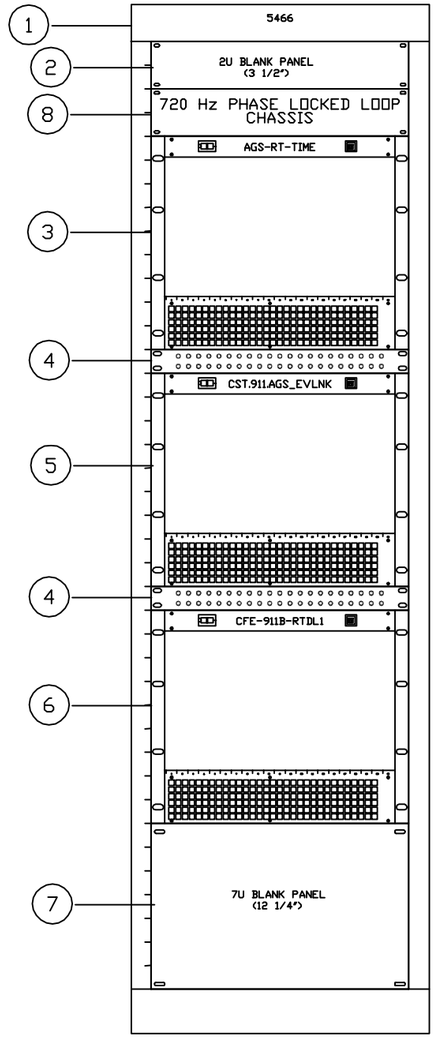

FRONT VIEW

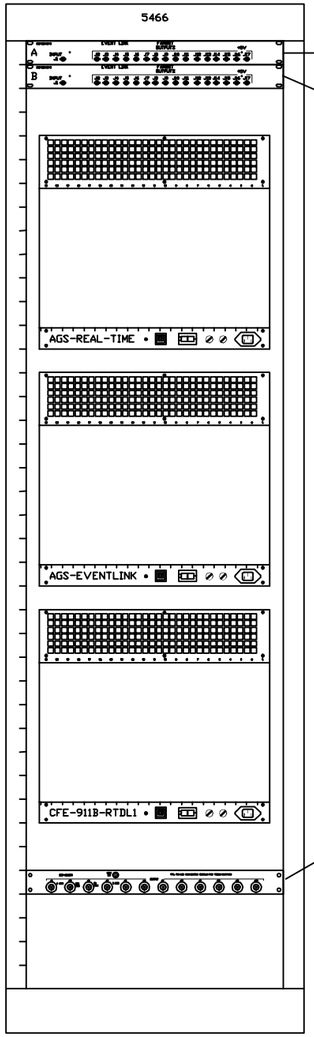

REAR VIEW

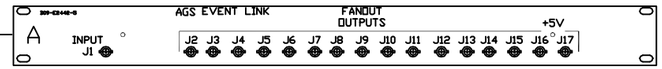

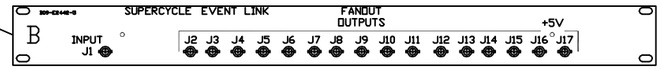

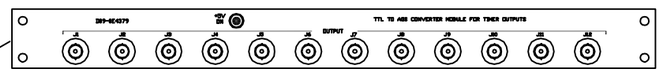

QTY REQD			REF DESIGNATOR	ITEM NO.	DESCRIPTION	MATL DWG NO./PNL NO.
		–	–	–	–	–
		–	–	–	–	–
		–	–	–	–	–
		–	–	–	–	–
		–	–	–	–	–
		–	–	–	–	–
		–	–	–	–	–
		–	–	–	–	–
		–	–	–	–	–
		1	NA	8	729 Hz PHASE LOCKED LOOP CHASSIS	–
		1	NA	7	7U x 19" BLANK PANEL (PREMIER METAL APR-1219-553)	–
		1	NA	6	VME CHASSIS CST.911B.AGS_EVLNK	94028825
		1	NA	5	VME CHASSIS CST.911B.AGS_EVLNK	94028824
		2	NA	4	GROMMET PANEL	–
		1	NA	3	VME CHASSIS AGS-RT-TIME ASSY.	94028823
		1	NA	2	2U x 19" BLANK PANEL (PREMIER METAL APR-319-553)	–
		1	NA	1	19" RACK, 70" H RACK SPACE	94028822

INTERPRET IN GENERAL ACCORDANCE WITH ASME Y14.24M-1989	Q.A. CATEGORY A-3	DATE	BROOKHAVEN NATIONAL LABORATORY		
UNLESS OTHERWISE SPECIFIED DIMENSIONS ARE IN INCHES	DRAWN BY J PEPE	2/18/2000	UPTON, N.Y. 11973		
DECIMAL TOLERANCES .X ±.030 .XX ±.015 .XXX ±.005 ANGULAR TOLERANCE ± .5°	CHECKED BY		C-A CONTROLS		
	DESIGN APPROVAL		Bldg 911B		
	ENGINEER APPROVAL		RACK ASSEMBLY 70"		
	SUPVR. APPROVAL		SIZE D	DRAWING NUMBER	REV. A
OUTSTANDING ECN	FINISH NA	BREAK SHARP EDGES MAX. XX MIN. XX	NEXT ASSEMBLY	MATERIAL: ——	SCALE: NA WEIGHT: – SHEET 1C

*AUTOCAD

PDF created with FinePrint pdfFactory Pro trial version http://www.fineprint.com

REV.	ZONE	ECN NO.	DATE	BY	CKR	APP.

Controls, C-AD 4/9/2004 1:26 PM ags_rt-chassis.dwg

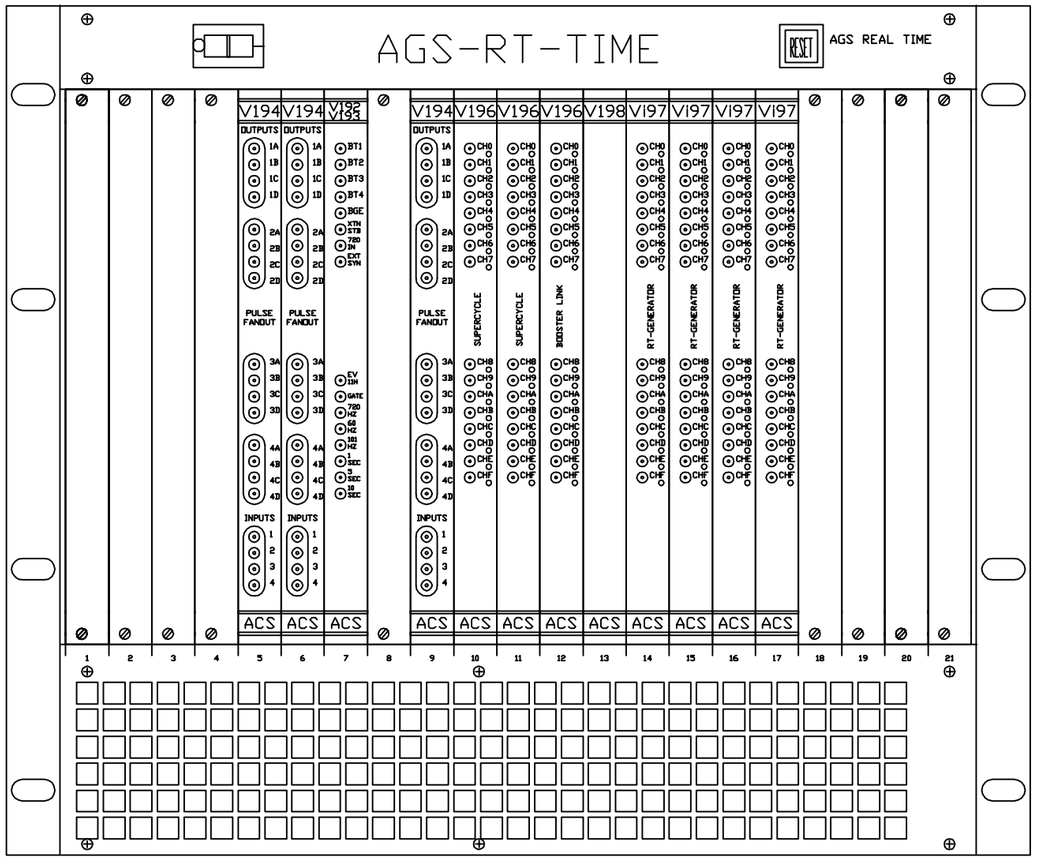

FRONT VIEW

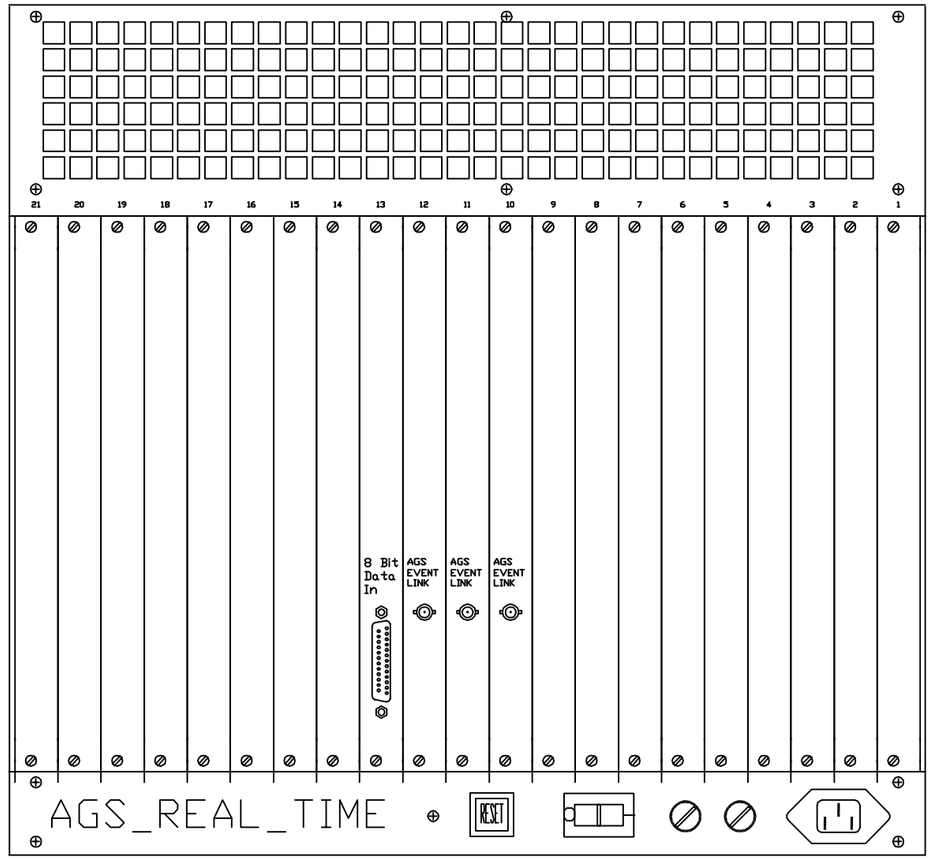

REAR VIEW

NOTE:

1. ALL UNUSED SLOTS, FRONT AND REAR

2. SPECIAL P2 BACKPLANE INSTALLED AND NO OTHER BOARDS ARE TO BE USED IN SLOTS 13 TO 21 HARDWARE DAMAGE WILL RESULT!!!

-3	-2	-1	QTY REQD	REF DESIGNATOR	ITEM NO.	DESCRIPTION	MAT'L DWG NO./BNL NO.
		26	A/R		10	BLANKS ALL UNUSED SLOTS	
		1	SLOTS14-17		9	V197 TIMELINE MODULE	D09-E2550
		1	SLOT 13		8	V198 TIMELINE BUFFER MODULE	D09-E2589
		1	SLOTS10-12		7	V196 TIMEOUT DECODER MODULE	D09-E2587
		-	-		6	-	-
		1	SLOT 8		5	BLANK	
		1	SLOT 7		4	V192/V193 BOOSTER EXTRACTION STARTGATE MODULE	D36-E-RD1455
		3	SL 5,6,9		3	V194 PULSE FANOUT MODULE	94028196
		1	SLOTS 1-5		2	BLANKS	
		1	N/A		1	VME CHASSIS	RHIC-93008000

INTERPRET IN GENERAL ACCORDANCE WITH ASME Y14.24M-1989

UNLESS OTHERWISE SPECIFIED DIMENSIONS ARE IN INCHES

DECIMAL TOLERANCES .X ±.030 .XX ±.015 .XXX ±.005

ANGULAR TOLERANCE ± .5°

OUTSTANDING ECN

NA FINISH

BREAK SHARP EDGES MAX. XX MIN. XX

Q.A. CATEGORY A-3

DRAWN BY J Pepe DATE 2/17/2000

CHECKED BY

DESIGN APPROVAL

ENGINEER APPROVAL

SUPVR. APPROVAL

NEXT ASSEMBLY

BROOKHAVEN NATIONAL LABORATORY
UPTON, N.Y. 11973
C-A CONTROLS
Bldg 911B

VME CHASSIS AGS_RT_TIME

SIZE D | DRAWING NUMBER | REV. A

MATERIAL: ——— SCALE: NA WEIGHT: – SHEET 2

*AUTOCAD

PDF created with FinePrint pdfFactory Pro trial version http://www.fineprint.com

REV.	ZONE	ECN NO.	DATE	BY	CKR	APP.

Bill Venegas, BNL 5/6/2003 2:07 PM ags_evlnk-chassis.dwg

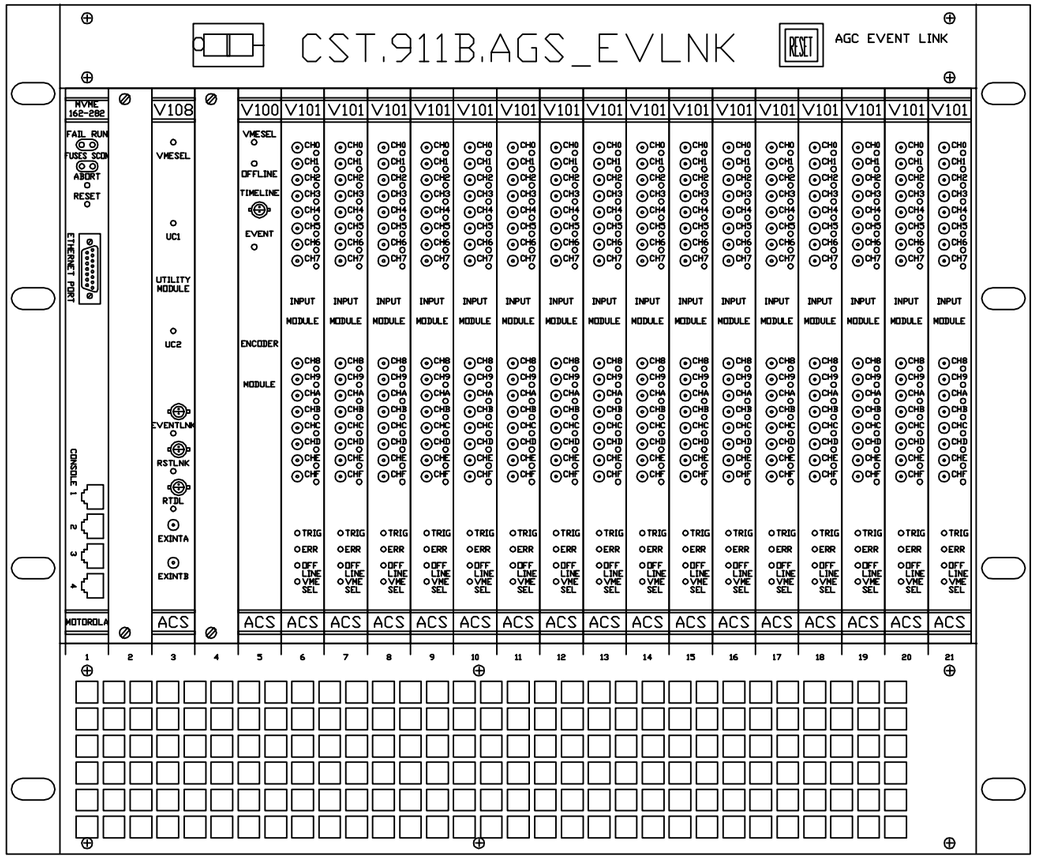

FRONT VIEW

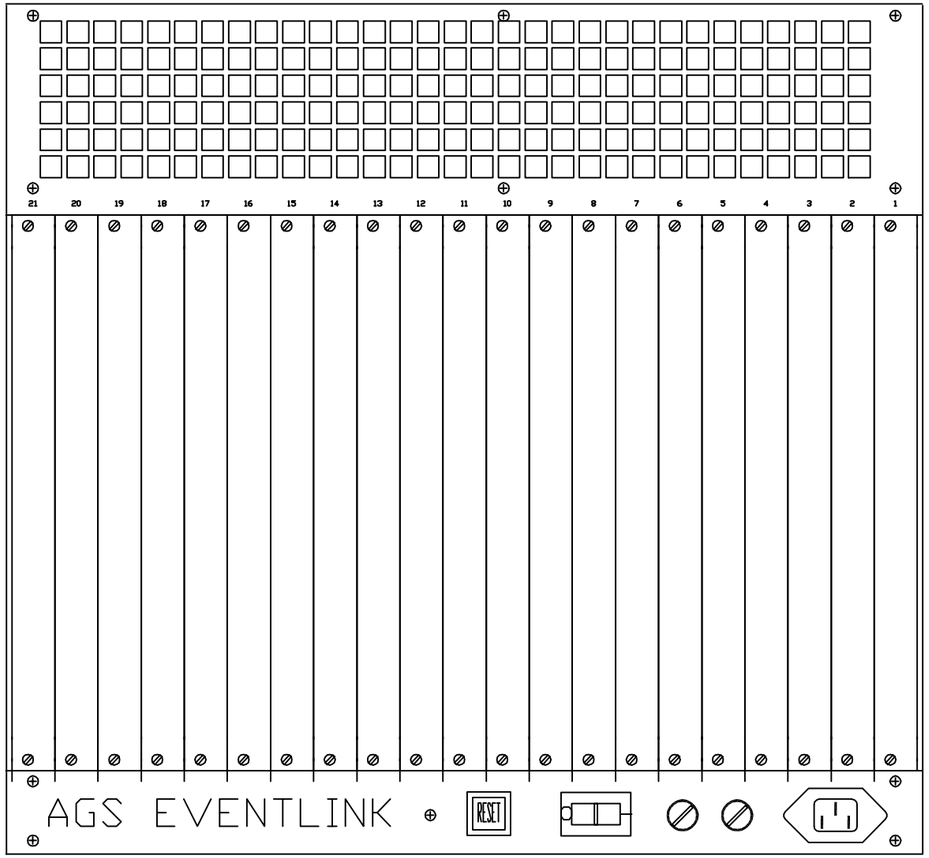

REAR VIEW

NOTE:

1. ALL UNUSED SLOTS, FRONT AND REAR

2. SPECIAL P2 BACKPLANE INSTALLED AND NO OTHER BOARDS ARE TO BE USED IN SLOTS 5 TO 21 HARDWARE DAMAGE WILL RESULT!!!

-3	-2	-1	REF DESIGNATOR	ITEM NO.	DESCRIPTION	MAT'L DWG NO./PART NO.
		x				
		x				
		x	SEE NOTE 1	8	VME BLANK PANEL (ELECTRO-SPACE ESFE-2985)	
		x				
		1	NOTE 2	7	P2 BACKPLANE	94028031
		16	SLOTS 6-21	6	V101 EVENT INPUT MODULES	94028050
		1	SLOT 5	5	V100 EVENT LINE ENCODER	94028046
		1	SLOT 5	4	x	x
		1	SLOT 3	3	V108 UTILITY MODULE	94028094
		1	SLOT 1	2	FRONT END COMPUTER	MVME 162-282
		1	N/A	1	VME CHASSIS	RHIC-93008000

QTY REQD

INTERPRET IN GENERAL ACCORDANCE WITH ASME Y14.24M-1989

UNLESS OTHERWISE SPECIFIED DIMENSIONS ARE IN INCHES

DECIMAL TOLERANCES .X ±.030 .XX ±.015 .XXX ±.005

ANGULAR TOLERANCE ± .5°

OUTSTANDING ECN

NA FINISH

BREAK SHARP EDGES MAX. XX MIN. XX

Q.A. CATEGORY A-3

DRAWN BY	J PEPE	2/16/2000
CHECKED BY		
DESIGN APPROVAL		
ENGINEER APPROVAL		
SUPVR. APPROVAL		

NEXT ASSEMBLY

BROOKHAVEN NATIONAL LABORATORY
UPTON, N.Y. 11973
C-A TIMING
BLDG 911B

VME CHASSIS CST.911B.AGS_EVLNK

SIZE D | DRAWING NUMBER | REV. A

MATERIAL: ——— SCALE: NA WEIGHT: – SHEET 3

*AUTOCAD

REV.	ZONE	ECN NO.	DATE	BY	CKR	APP.

Controls, bnl 9/7/2004 2:51 PM ags_rtdl_gc-chassis_V132.dwg

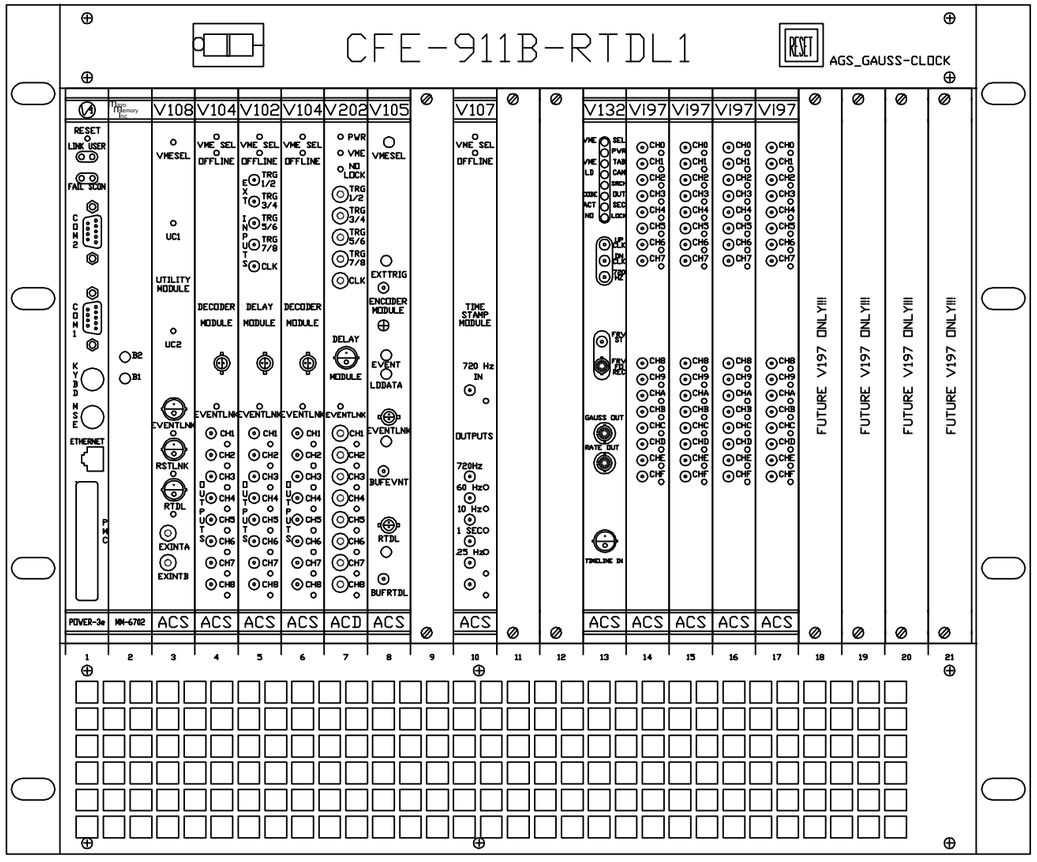

FRONT VIEW

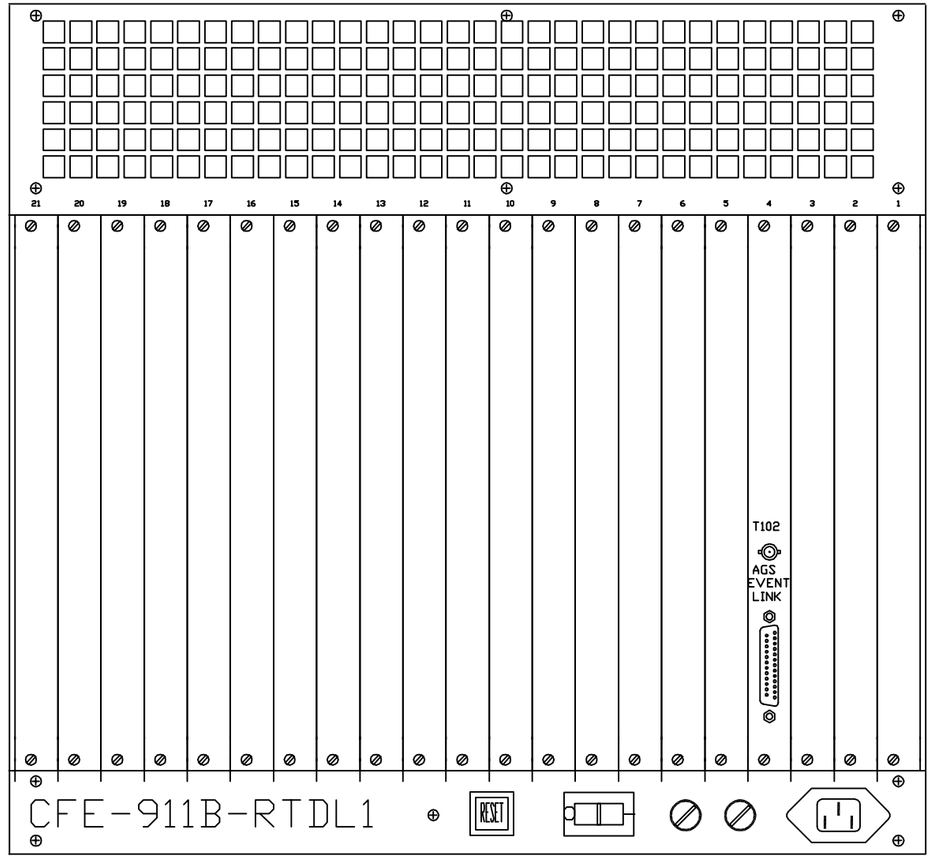

REAR VIEW

NOTE:

1. ALL UNUSED SLOTS, FRONT AND REAR BLANK FILLER PANELS

2. SPECIAL P2 BACKPLANE INSTALLED AND NO OTHER BOARDS ARE TO BE USED IN SLOTS 13 TO 21 HARDWARE DAMAGE WILL RESULT!!!

3. SPECIAL P2 BACKPLANE INSTALLED AND NO OTHER BOARDS ARE TO BE USED IN SLOTS 8 TO 10

-3	-2	-1	REF DESIGNATOR	ITEM NO.	DESCRIPTION	MAT'L DWG NO./DWG NO.
		1	SLOT 4 REAR	13	T102 TRANSITION MODULE	94028XXX
		1	SLOT 5	12	V102 DELAY MODULE	94028072
		1	SLOT 2	11	MEMORY MODULE	MM6702
		1	SLOTS14-17	10	V197 TIMELINE MODULE	D09-E2550
		1	SLOT 13	9	V132 GAUSS GENERATOR MODULE	D09-E2971-1
		1	SLOT 7	8	V202 TIME LINE DECODER	94028892
		0	SLOT 9	7	FOR FUTURE V106 RTDL INPUT MODULE	94028042
		1	SLOT 8	6	V105 RTDL ENCODER MODULE	94028068
		1	SLOT 10	5	V107 TIMESTAMP MODULE	
		2	SLOT 4,6	4	V104 TIMELINE DECODER MODULE	94028175
		1	SLOT 3	3	V108 UTILITY MODULE	94028094
		1	SLOT 1	2	POWER3e WITH 64 MB MEMORY	
		1	N/A	1	VME CHASSIS	RHIC-93008000

QTY REQD

INTERPRET IN GENERAL ACCORDANCE WITH ASME Y14.24M-1989

UNLESS OTHERWISE SPECIFIED DIMENSIONS ARE IN INCHES

DECIMAL TOLERANCES .X ±.030 .XX ±.015 .XXX ±.005 ANGULAR TOLERANCE ± .5°

NA FINISH

BREAK SHARP EDGES MAX. XX MIN. XX

OUTSTANDING ECN

Q.A. CATEGORY A-3

		DATE
DRAWN BY	Venegas	9/23/02
CHECKED BY		
DESIGN APPROVAL		
ENGINEER APPROVAL		
SUPVR. APPROVAL		

NEXT ASSEMBLY

BROOKHAVEN NATIONAL LABORATORY
UPTON, N.Y. 11973
C-A CONTROLS
Bldg 911B

VME CHASSIS CFE-911B-RTDL01

SIZE D | DRAWING NUMBER | REV. A

MATERIAL: ——— SCALE: NA WEIGHT: – SHEET 4

*AUTOCAD

Schoenfeld, Controls 10/18/2004 9:11 AM RK5649_FO_CH_A.dwg

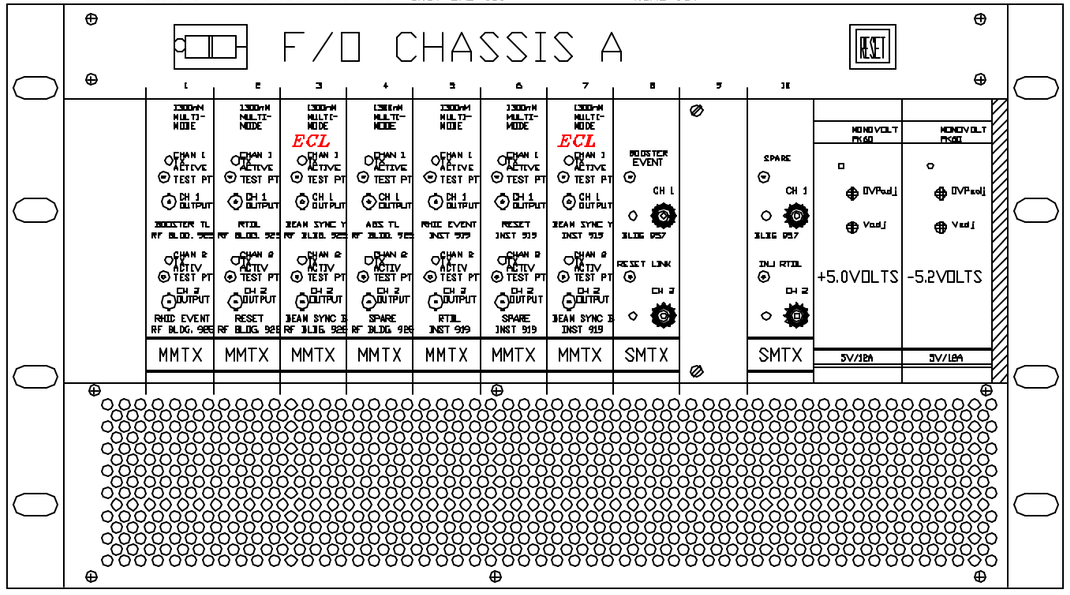

FRONT VIEW

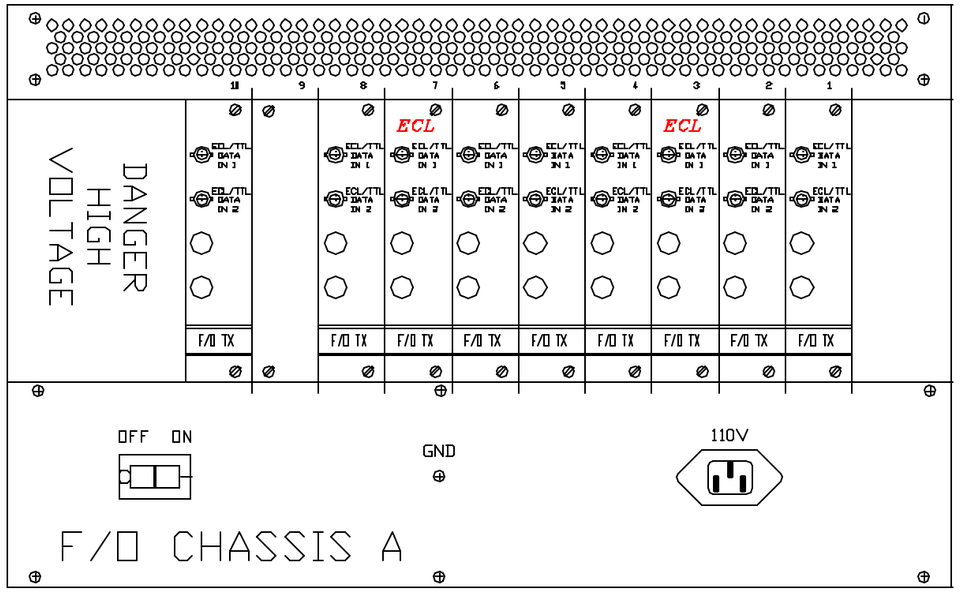

REAR VIEW

		2	SL 8, 10	7	3U FIBER OPTIC TRANSMITTER TRANSISTION MODULE, TTL	D09-E2495-3
		2	SLOT 8, 10	6	3U FIBER OPTIC TRANSMITTER MODULE, SINGLEMODE	
		2	SL 3,7	5	3U FIBER OPTIC TRANSMITTER TRANSISTION MODULE, ECL	D09-E2540-3
		2	ALL UNUSED	4	3U x 6HP BLANK PANEL (ELECTRO SPACE ESFE-3032)	X
		5	SL 1,2,4,5,6	3	3U FIBER OPTIC TRANSMITTER TRANSISTION MODULE, TTL	D09-E2495-3
		7	SLOT 1-7	2	3U FIBER OPTIC TRANSMITTER MODULE, MULTIMODE	94028168
		1	NA	1	3U FIBER OPTIC CHASSIS	94028261
-3	-2	-1	REF DESIGNATOR	ITEM NO.	DESCRIPTION	MAT'L DWG NO./SIZE NO.
QTY REQD						

INTERPRET IN GENERAL ACCORDANCE WITH ASME Y14.24M-1989

UNLESS OTHERWISE SPECIFIED DIMENSIONS ARE IN INCHES

DECIMAL TOLERANCES
.X ±.030
.XX ±.015
.XXX ±.005
ANGULAR TOLERANCE ± .5°

NA FINISH

BREAK SHARP EDGES MAX. XX MIN. XX

OUTSTANDING ECN

Q.A. CATEGORY A-3		DATE
DRAWN BY	Ed Karopsak	2/5/02
CHECKED BY		
DESIGN APPROVAL		
ENGINEER APPROVAL	????	2/5/02
SUPVR. APPROVAL		

NEXT ASSEMBLY

BROOKHAVEN NATIONAL LABORATORY
UPTON, N.Y. 11973
RHIC CONTROLS
BLDG 911-B RACK 5649
F/O CHASSIS A ASSY.

SIZE D | RK5649_FO_CH_A.DWG | REV. A
DRAWING NUMBER

MATERIAL: ——— SCALE: NA WEIGHT: - SHEET 1 OF 1

1 *AUTOCAD

REV.	ZONE	ECN NO.	DATE	BY	CKD	APP.

Schoenfeld, Controls 10/18/2004 9:47 AM SUPERCYCLE_1.DWG

CDC-SCGENTERATOR
RK #: 4535
BLDG #: 911B

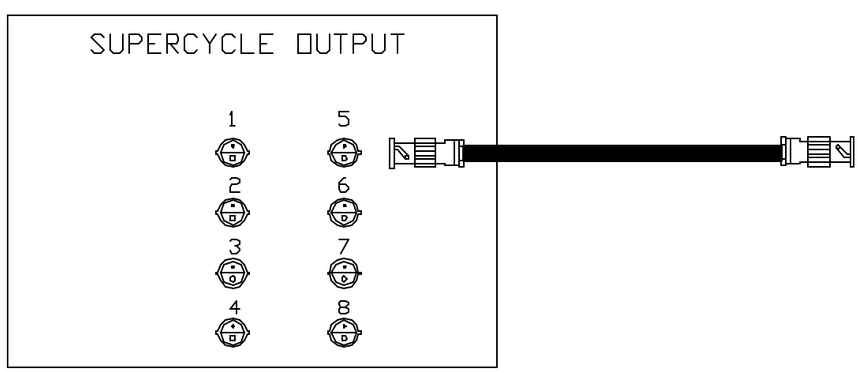

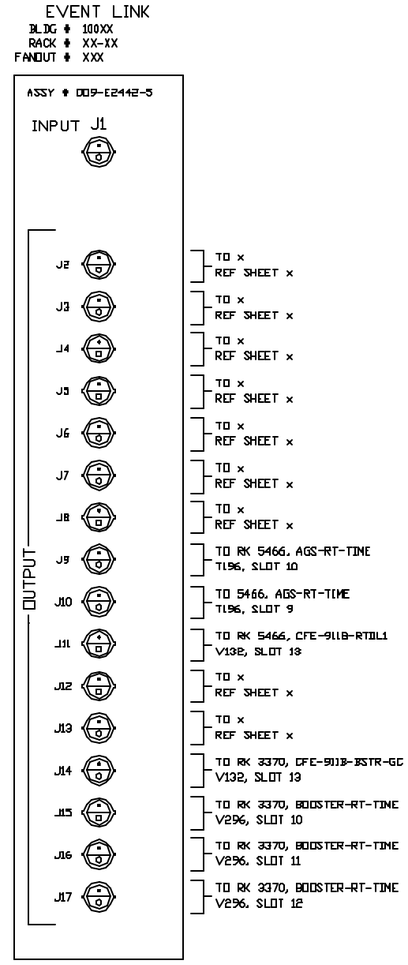

TO x
REF SHEET x

TO x
REF SHEET x

TO x
REF SHEET x

TO x
REF SHEET x

TO x
REF SHEET x

TO x
REF SHEET x

TO x
REF SHEET x

TO RK 5466, AGS-RT-TIME
T196, SLOT 10

TO 5466, AGS-RT-TIME
T196, SLOT 9

TO RK 5466, CFE-911B-RTDL1
V132, SLOT 18

TO x
REF SHEET x

TO x
REF SHEET x

TO RK 3370, CFE-911B-BSTR-GD
V132, SLOT 19

TO RK 3370, BOOSTER-RT-TIME
V296, SLOT 10

TO RK 3370, BOOSTER-RT-TIME
V296, SLOT 11

TO RK 3370, BOOSTER-RT-TIME
V296, SLOT 12

-3	-2	-1	REF DESIGNATION	ECN NO.	DESCRIPTION	MFG. DWG HOLDING NO.
ANY AREA						

INTERPRET IN GENERAL ACCORDANCE WITH ASME Y14.24M-1989
UNLESS OTHERWISE SPECIFIED DIMENSIONS ARE IN INCHES
DECIMAL TOLERANCES
.X ± .030
.XX ± .015
.XXX ± .005
ANGULAR TOLERANCE ± .5°
OUTSTANDING ECN: NA / RMSN
BREAK SHARP EDGES MAX. XX MIN. XX

Q.A. CATEGORY A-3 DATE
DRAWN BY Schoenfeld 11/16/04
CHECKED BY
DESIGN APPROVAL
ENGINEER APPROVAL
SUPVR. APPROVAL
NEXT ASSEMBLY

BROOKHAVEN NATIONAL LABORATORY
UPTON, N.Y. 11973
CONTROLS WIRING DIAGRAM
BLDG 911B, RACK 5466, FANOUT B
SUPERCYCLE
SIZE D | SUPERCYCLE_1 (DRAWING NUMBER) | REV. A
MATERIAL: ——— SCALE: FULL WEIGHT: – SHEET 4A

REV.	ZONE	ECN NO.	DATE	BY	CKR	APP.

Controls, C-AD 4/9/2004 11:06 AM v194_rt5.dwg

V194
BLDG #: 911B
RACK #: 5466
CHASSIS ID: AGS_RT_TIME
SLOT #: 5
BASE ADDRESS: N/A

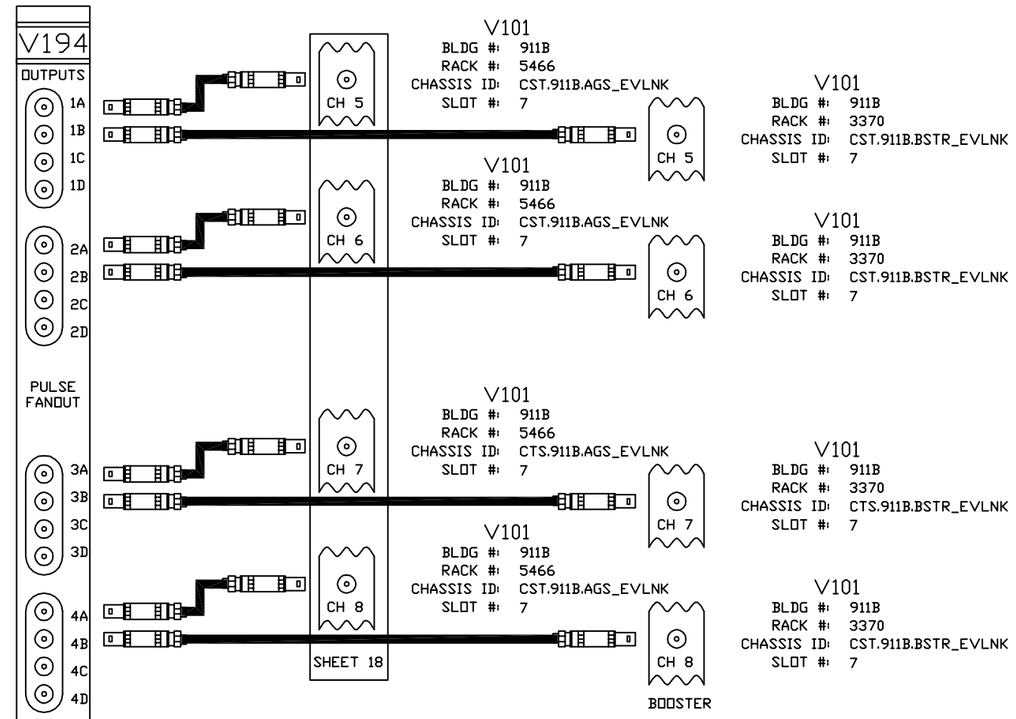

AU1, V196, AGS-RT-TIME, SLOT11, CH 5 SHEET 9

AU2, V196, AGS-RT-TIME, SLOT 11, CH 6 SHEET 9

AU3, V196, AGS-RT-TIME, SLOT 11, CH 7 SHEET 9

AU4, V196, AGS-RT-TIME, SLOT 11, CH 8 SHEET 9

-3	-2	-1	REF DESIGNATOR	ITEM NO.	DESCRIPTION	MATL DWG NO./PL NO.
QTY REQD						

INTERPRET IN GENERAL ACCORDANCE WITH ASME Y14.24M-1989
UNLESS OTHERWISE SPECIFIED DIMENSIONS ARE IN INCHES
DECIMAL TOLERANCES .X ±.030 .XX ±.015 .XXX ±.005
ANGULAR TOLERANCE ± .5°

Q.A. CATEGORY A-3		DATE	
DRAWN BY	Ed Koropsak	4/9/04	
CHECKED BY			
DESIGN APPROVAL			
ENGINEER APPROVAL			
SUPVR. APPROVAL			

BROOKHAVEN NATIONAL LABORATORY
UPTON, N.Y. 11973
AGS CONTROLS WIRING DIAGRAM
BLDG. 911B CHASSIS AGS_RT_TIME
V194 FANOUT MODULE

OUTSTANDING ECN | NA FINISH | BREAK SHARP EDGES MAX XX MIN XX | NEXT ASSEMBLY | SIZE D | DRAWING NUMBER | REV. A | MATERIAL: — | SCALE: NA | WEIGHT: — | SHEET 5a

*AUTOCAD

PDF created with FinePrint pdfFactory Pro trial version http://www.fineprint.com

REV.	ZONE	ECN NO.	DATE	BY	CKR	APP.

ACS, BNL 3/28/00 9:32 AM v194_rt6.dwg

V194
BLDG #: 911B
RACK #: 5466
CHASSIS ID: AGS_RT_TIME
SLOT #: 6
BASE ADDRESS: N/A

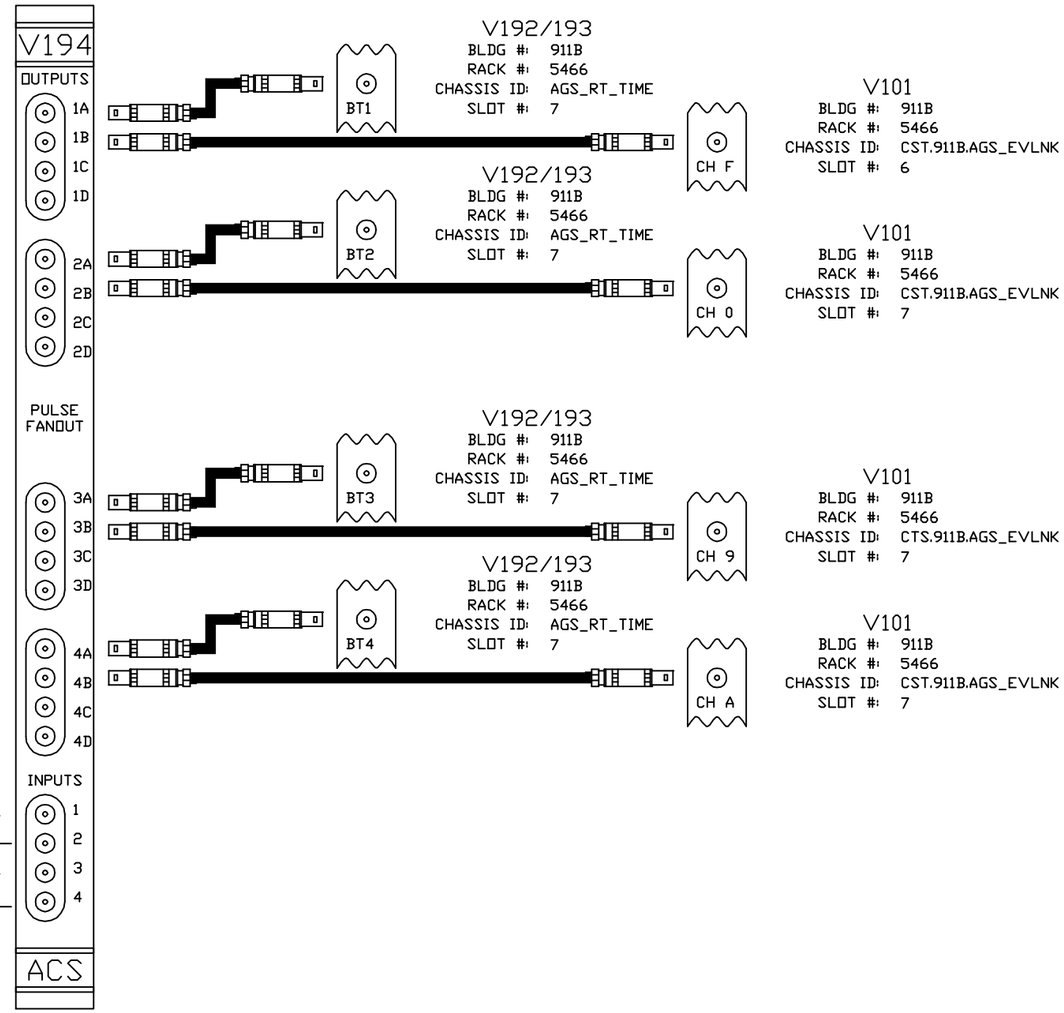

BT1, V196, AGS-RT-TIME, SLOT10, CH F
BT2, V196, AGS-RT-TIME, SLOT 11, CH 0
BT3, V196, AGS-RT-TIME, SLOT 11, CH 9
BT4, V196, AGS-RT-TIME, SLOT 11, CH A

-3	-2	-1	REF DESIGNATOR	ITEM NO.	DESCRIPTION	MAT'L DWG NO./DWG. NO.
QTY REQD						

INTERPRET IN GENERAL ACCORDANCE WITH ASME Y14.24M–1989
UNLESS OTHERWISE SPECIFIED DIMENSIONS ARE IN INCHES
DECIMAL TOLERANCES .X ±.030 .XX ±.015 .XXX ±.005
ANGULAR TOLERANCE ± .5°
FINISH NA
BREAK SHARP EDGES MAX. XX MIN. XX
OUTSTANDING ECN

Q.A. CATEGORY A–3
DRAWN BY J Pepe — DATE 3/3/2000
CHECKED BY
DESIGN APPROVAL
ENGINEER APPROVAL
SUPVR. APPROVAL
NEXT ASSEMBLY

BROOKHAVEN NATIONAL LABORATORY
UPTON, N.Y. 11973
AGS CONTROLS WIRING DIAGRAM
BLDG. 911B CHASSIS AGS_RT_TIME
V194 FANOUT MODULE

SIZE D — DRAWING NUMBER — REV. A
MATERIAL: ——— SCALE: NA WEIGHT: — SHEET 5

*AUTOCAD

REV.	ZONE	ECN NO.	DATE	BY	CKR	APP.

Controls, bnl 9/7/2004 11:44 AM v194_rt4.dwg

V194
BLDG #: 911B
RACK #: 5466
CHASSIS ID: AGS_RT_TIME
SLOT #: 4
BASE ADDRESS: N/A

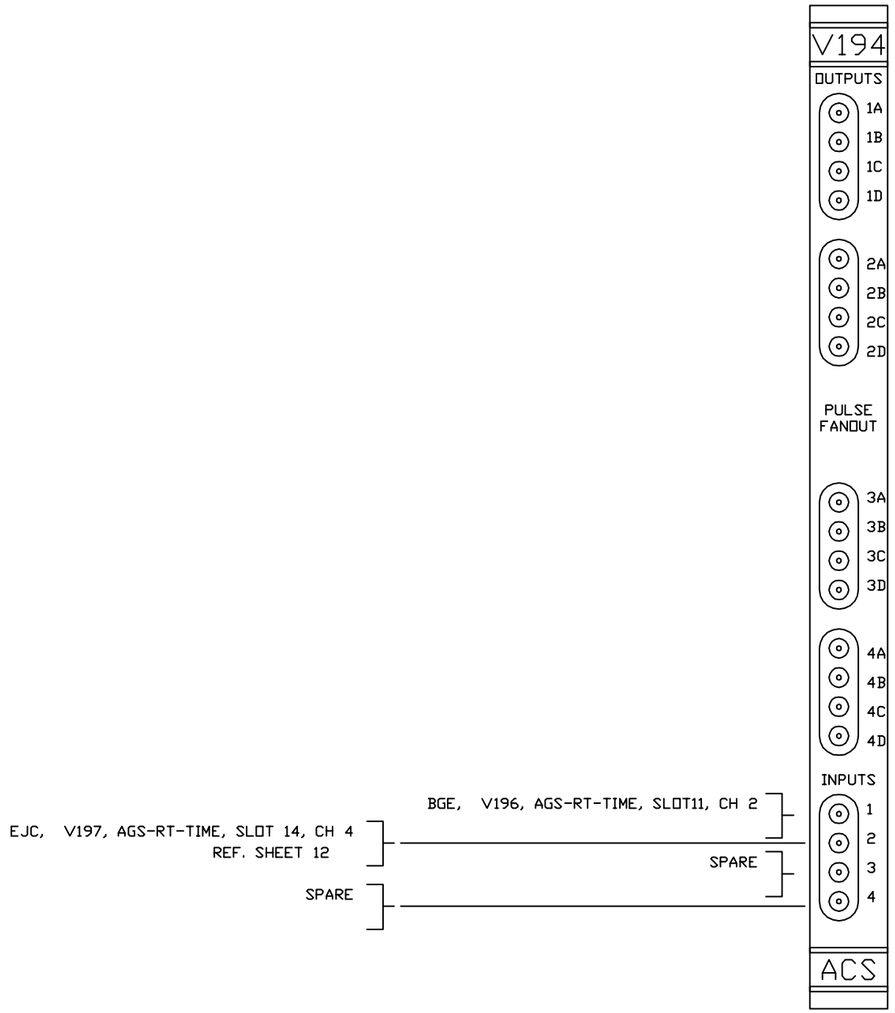

V192/193
BLDG #: 911B
RACK #: 5466
CHASSIS ID: AGS_RT_TIME
SLOT #: 7

V132
BLDG #: 911B
RACK #: 5466
CHASSIS ID: CFE-911B-RTDL1
SLOT #: 13

V101
BLDG #: 911B
RACK #: 5466
CHASSIS ID: CST.911B.AGS_EVLNK
SLOT #: 7

V101
BLDG #: 911B
RACK #: 5466
CHASSIS ID: CST.911B.AGS_EVLNK
SLOT #: 8

-3	-2	-1	REF DESIGNATOR	ITEM NO.	DESCRIPTION	MAT'L SPEC NO./DWG NO.
QTY REQD						

INTERPRET IN GENERAL ACCORDANCE WITH ASME Y14.24M-1989
UNLESS OTHERWISE SPECIFIED DIMENSIONS ARE IN INCHES
DECIMAL TOLERANCES .X ±.030 .XX ±.015 .XXX ±.005
ANGULAR TOLERANCE ± .5°
NA FINISH
BREAK SHARP EDGES MAX. XX MIN. XX
OUTSTANDING ECN

Q.A. CATEGORY A-3	DATE	BROOKHAVEN NATIONAL LABORATORY	
DRAWN BY J Pepe	3/1/2000	UPTON, N.Y. 11973	
CHECKED BY		AGS CONTROLS WIRING DIAGRAM	
DESIGN APPROVAL		BLDG. 911B CHASSIS AGS_RT_TIME	
ENGINEER APPROVAL		V194 FANOUT MODULE 4	
SUPVR. APPROVAL		SIZE D	REV. A
NEXT ASSEMBLY		DRAWING NUMBER	
		MATERIAL: ——— SCALE: NA WEIGHT: —	SHEET 58

*AUTOCAD

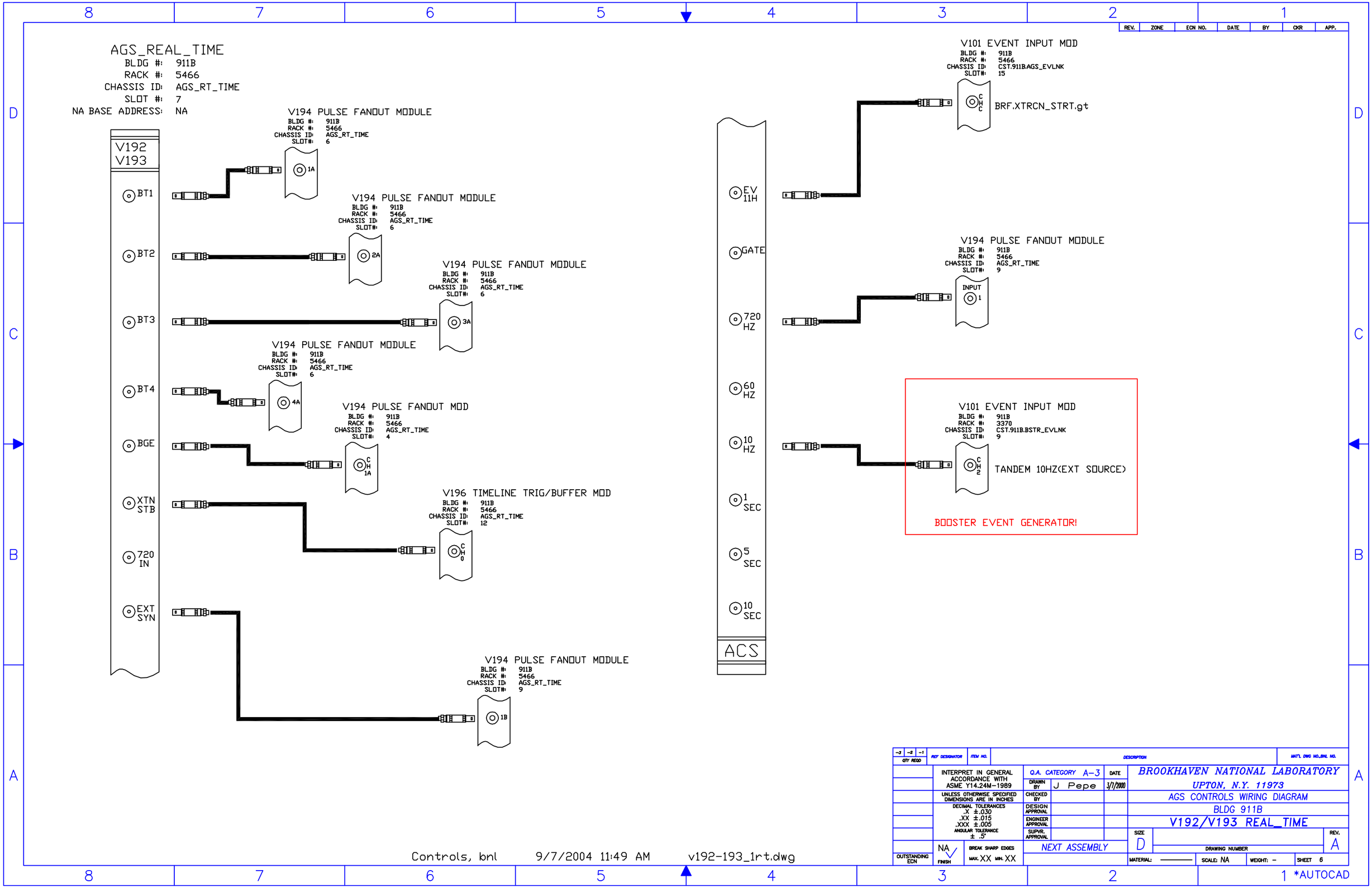

AGS_REAL_TIME
BLDG #: 911B
RACK #: 5466
CHASSIS ID: AGS_RT_TIME
SLOT #: 7
NA BASE ADDRESS: NA
V192
V193
BT1
BT2
BT3
BT4
BGE
XTN STB
720 IN
EXT SYN
V194 PULSE FANOUT MODULE
BLDG #: 911B
RACK #: 5466
CHASSIS ID: AGS_RT_TIME
SLOT#: 6
1A
V194 PULSE FANOUT MODULE
BLDG #: 911B
RACK #: 5466
CHASSIS ID: AGS_RT_TIME
SLOT#: 6
2A
V194 PULSE FANOUT MODULE
BLDG #: 911B
RACK #: 5466
CHASSIS ID: AGS_RT_TIME
SLOT#: 6
3A
V194 PULSE FANOUT MODULE
BLDG #: 911B
RACK #: 5466
CHASSIS ID: AGS_RT_TIME
SLOT#: 6
4A
V194 PULSE FANOUT MOD
BLDG #: 911B
RACK #: 5466
CHASSIS ID: AGS_RT_TIME
SLOT#: 4
CH 1A
V196 TIMELINE TRIG/BUFFER MOD
BLDG #: 911B
RACK #: 5466
CHASSIS ID: AGS_RT_TIME
SLOT#: 12
CH 0
V194 PULSE FANOUT MODULE
BLDG #: 911B
RACK #: 5466
CHASSIS ID: AGS_RT_TIME
SLOT#: 9
1B
EV 11H
GATE
720 HZ
60 HZ
10 HZ
1 SEC
5 SEC
10 SEC
ACS
V101 EVENT INPUT MOD
BLDG #: 911B
RACK #: 5466
CHASSIS ID: CST.911B.AGS_EVLNK
SLOT#: 15
CH C
BRF.XTRCN_STRT.gt
V194 PULSE FANOUT MODULE
BLDG #: 911B
RACK #: 5466
CHASSIS ID: AGS_RT_TIME
SLOT#: 9
INPUT 1
V101 EVENT INPUT MOD
BLDG #: 911B
RACK #: 3370
CHASSIS ID: CST.911B.BSTR_EVLNK
SLOT#: 9
CH 2
TANDEM 10HZ(EXT SOURCE)
BOOSTER EVENT GENERATOR!
REV. ZONE ECN NO. DATE BY CKR APP.
Controls, bnl 9/7/2004 11:49 AM v192-193_1rt.dwg
INTERPRET IN GENERAL ACCORDANCE WITH ASME Y14.24M-1989
UNLESS OTHERWISE SPECIFIED DIMENSIONS ARE IN INCHES
DECIMAL TOLERANCES .X ±.030 .XX ±.015 .XXX ±.005
ANGULAR TOLERANCE ± .5°
NA FINISH
BREAK SHARP EDGES MAX. XX MIN. XX
OUTSTANDING ECN
Q.A. CATEGORY A-3
DATE 3/7/2000
DRAWN BY J Pepe
CHECKED BY
DESIGN APPROVAL
ENGINEER APPROVAL
SUPVR. APPROVAL
NEXT ASSEMBLY
BROOKHAVEN NATIONAL LABORATORY
UPTON, N.Y. 11973
AGS CONTROLS WIRING DIAGRAM
BLDG 911B
V192/V193 REAL_TIME
SIZE D
DRAWING NUMBER
REV. A
MATERIAL:
SCALE: NA
WEIGHT: -
SHEET 6
1 *AUTOCAD

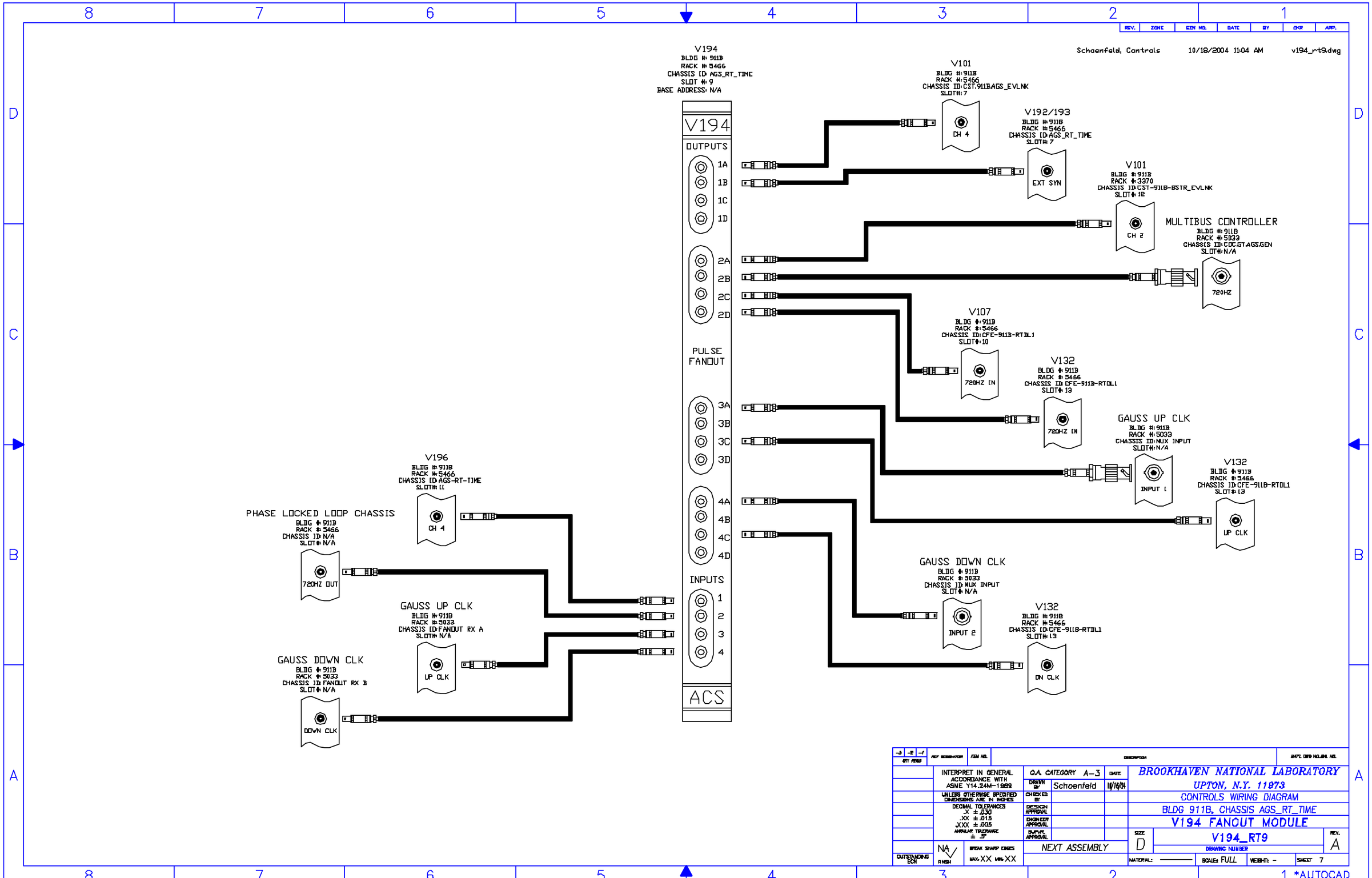

Schoenfeld, Controls 10/18/2004 11:04 AM v194_rt9.dwg
V194
BLDG #: 911B
RACK #: 5466
CHASSIS ID: AGS_RT_TIME
SLOT #: 9
BASE ADDRESS: N/A
V194
OUTPUTS
1A
1B
1C
1D
2A
2B
2C
2D
PULSE FANOUT
3A
3B
3C
3D
4A
4B
4C
4D
INPUTS
1
2
3
4
ACS
V101
BLDG #: 911B
RACK #: 5466
CHASSIS ID: CST.911B.AGS_EVLNK
SLOT#: 7
CH 4
V192/193
BLDG #: 911B
RACK #: 5466
CHASSIS ID: AGS_RT_TIME
SLOT#: 7
EXT SYN
V101
BLDG #: 911B
RACK #: 3370
CHASSIS ID: CST-911B-BSTR_EVLNK
SLOT#: 12
CH 2
MULTIBUS CONTROLLER
BLDG #: 911B
RACK #: 5033
CHASSIS ID: CDC.GT.AGS.GEN
SLOT#: N/A
720HZ
V107
BLDG #: 911B
RACK #: 5466
CHASSIS ID: CFE-911B-RTDL1
SLOT#: 10
720HZ IN
V132
BLDG #: 911B
RACK #: 5466
CHASSIS ID: CFE-911B-RTDL1
SLOT#: 13
720HZ IN
GAUSS UP CLK
BLDG #: 911B
RACK #: 5033
CHASSIS ID: MUX INPUT
SLOT#: N/A
INPUT 1
V132
BLDG #: 911B
RACK #: 5466
CHASSIS ID: CFE-911B-RTDL1
SLOT#: 13
UP CLK
GAUSS DOWN CLK
BLDG #: 911B
RACK #: 5033
CHASSIS ID: MUX INPUT
SLOT#: N/A
INPUT 2
V132
BLDG #: 911B
RACK #: 5466
CHASSIS ID: CFE-911B-RTDL1
SLOT#: 13
DN CLK
V196
BLDG #: 911B
RACK #: 5466
CHASSIS ID: AGS-RT-TIME
SLOT#: 11
CH 4
PHASE LOCKED LOOP CHASSIS
BLDG #: 911B
RACK #: 5466
CHASSIS ID: N/A
SLOT#: N/A
720HZ OUT
GAUSS UP CLK
BLDG #: 911B
RACK #: 5033
CHASSIS ID: FANOUT RX A
SLOT#: N/A
UP CLK
GAUSS DOWN CLK
BLDG #: 911B
RACK #: 5033
CHASSIS ID: FANOUT RX B
SLOT#: N/A
DOWN CLK
REV. ZONE ECN NO. DATE BY CKR APP.
-3 -2 -1 QTY REQD REF DESIGNATOR ITEM NO. DESCRIPTION MAT'L DWG NO. ENG NO.
INTERPRET IN GENERAL ACCORDANCE WITH ASME Y14.24M-1989
UNLESS OTHERWISE SPECIFIED DIMENSIONS ARE IN INCHES
DECIMAL TOLERANCES .X ± .030 .XX ± .015 .XXX ± .005
ANGULAR TOLERANCE ± .5°
NA FINISH
BREAK SHARP EDGES MAX. XX MIN. XX
OUTSTANDING ECN
Q.A. CATEGORY A-3
DATE
DRAWN BY Schoenfeld 10/18/04
CHECKED BY
DESIGN APPROVAL
ENGINEER APPROVAL
SUPVR. APPROVAL
NEXT ASSEMBLY
BROOKHAVEN NATIONAL LABORATORY
UPTON, N.Y. 11973
CONTROLS WIRING DIAGRAM
BLDG 911B, CHASSIS AGS_RT_TIME
V194 FANOUT MODULE
SIZE D
V194_RT9
DRAWING NUMBER
REV. A
MATERIAL:
SCALE: FULL
WEIGHT: -
SHEET 7
1 *AUTOCAD

REV.	ZONE	ECN NO.	DATE	BY	CKR	APP.

SUPERCYCLE
BLDG #: 911B
RACK #: 5466
CHASSIS ID: AGS_RT_TIME
SLOT #: 10
A16 BASE ADDRESS: NA

V196
CH0
CH1
CH2
CH3
CH4
CH5
CH6
CH7

V101 EVENT INPUT MOD
BLDG #: 911B
RACK #: 5466
CHASSIS ID: CST.911B.AGS_EVLNK
SLOT#: 7
CH 0
SCS

V101 EVENT INPUT MOD
BLDG #: 911B
RACK #: 5466
CHASSIS ID: CST.911B.AGS_EVLNK
SLOT#: NA
CH 1

V101 EVENT INPUT MOD
BLDG #: 911B
RACK #: 5466
CHASSIS ID: CST.911B.AGS_EVLNK
SLOT#: NA
CH 2

V101 EVENT INPUT MOD
BLDG #: 911B
RACK #: 5466
CHASSIS ID: CST.911B.AGS_EVLNK
SLOT#: NA
CH 3

V101 EVENT INPUT MOD
BLDG #: 911B
RACK #: 5466
CHASSIS ID: CST.911B.AGS_EVLNK
SLOT#: NA
CH 4

V101 EVENT INPUT MOD
BLDG #: 911B
RACK #: 5466
CHASSIS ID: CST.911B.AGS_EVLNK
SLOT#: NA
CH 5

V101 EVENT INPUT MOD
BLDG #: 911B
RACK #: 5466
CHASSIS ID: CST.911B.AGS_EVLNK
SLOT#: 9
CH 5
BRF.COGGING_ENABLED (35H)

V101 EVENT INPUT MOD
BLDG #: 911B
RACK #: 5466
CHASSIS ID: CST.911B.AGS_EVLNK
SLOT#: 9
CH 4
TBE

CH8
CH9
CHA
CHB
CHC
CHD
CHE
CHF
ACS

V101 EVENT INPUT MOD
BLDG #: 911B
RACK #: 5466
CHASSIS ID: CST.911B.AGS_EVLNK
SLOT#: NA
CH 8

V101 EVENT INPUT MOD
BLDG #: 911B
RACK #: 5466
CHASSIS ID: CST.911B.AGS_EVLNK
SLOT#: NA
CH 9

V101 EVENT INPUT MOD
BLDG #: 911B
RACK #: 5466
CHASSIS ID: CST.911B.AGS_EVLNK
SLOT#: NA
CH A

V101 EVENT INPUT MOD
BLDG #: 911B
RACK #: 5466
CHASSIS ID: CST.911B.AGS_EVLNK
SLOT#: NA
CH B

V101 EVENT INPUT MOD
BLDG #: 911B
RACK #: 5466
CHASSIS ID: CST.911B.AGS_EVLNK
SLOT#: NA
CH C

V101 EVENT INPUT MOD
BLDG #: 911B
RACK #: 5466
CHASSIS ID: CST.911B.AGS_EVLNK
SLOT#: NA
CH D

V101 EVENT INPUT MOD
BLDG #: 911B
RACK #: 5466
CHASSIS ID: CST.911B.AGS_EVLNK
SLOT#: NA
CH E

V194 PULSE FANOUT MOD
BLDG #: 911B
RACK #: 5466
CHASSIS ID: AGS_REAL_TIME
SLOT#: 6
INPUT 1
BT1

-3	-2	-1	QTY REQD	REF DESIGNATOR	ITEM NO.	DESCRIPTION	MAT'L DWG NO./DRG. NO.

INTERPRET IN GENERAL ACCORDANCE WITH ASME Y14.24M-1989
UNLESS OTHERWISE SPECIFIED DIMENSIONS ARE IN INCHES
DECIMAL TOLERANCES .X ±.030 .XX ±.015 .XXX ±.005
ANGULAR TOLERANCE ± .5'
OUTSTANDING ECN: NA
FINISH
BREAK SHARP EDGES MAX. XX MIN. XX

Q.A. CATEGORY A-3 | DATE
DRAWN BY J Pepe 2/27/2000
CHECKED BY
DESIGN APPROVAL
ENGINEER APPROVAL
SUPVR. APPROVAL
NEXT ASSEMBLY

BROOKHAVEN NATIONAL LABORATORY
UPTON, N.Y. 11973
AGS CONTROLS WIRING DIAGRAM
BLDG 911B
AGS SUPERCYCLE TRIGGER(SLOT10)
SIZE D | DRAWING NUMBER | REV. A
MATERIAL: —— | SCALE: NA | WEIGHT: – | SHEET 8

Controls, C-AD 4/9/2004 1:29 PM v196_1ss.dwg

1 *AUTOCAD

PDF created with FinePrint pdfFactory Pro trial version http://www.fineprint.com

SUPERCYCLE
BLDG #: 911B
RACK #: 5466
CHASSIS ID: AGS_RT_TIME
SLOT #: 11
A16 BASE ADDRESS: NA

V196
CH0
CH1
CH2
CH3
CH4
CH5
CH6
CH7

V194
BLDG #: 911-B
RACK #: 5466
CHASSIS ID: AGS_RT_TIME
SLOT #: 6
BASE ADDRESS: N/A
INPUTS 2
BT2

V101 EVENT INPUT MOD
BLDG #: 911B
RACK #: 5466
CHASSIS ID: CST.911B.AGS_EVLNK
SLOT #: NA
CH1

V101 EVENT INPUT MOD
BLDG #: 911B
RACK #: 5466
CHASSIS ID: CST.911B.AGS_EVLNK
SLOT #: NA
CH2

V194 PULSE FANOUT
BLDG #: 911B
RACK #: 5466
CHASSIS ID: AGS_RT_TIME
SLOT #: 4
CH1

V101 EVENT INPUT MOD
BLDG #: 911B
RACK #: 5466
CHASSIS ID: CST.911B.AGS_EVLNK
SLOT #: 9
CH4
AT0

V194
BLDG #: 911-B
RACK #: 5466
CHASSIS ID: AGS_RT_TIME
SLOT #: 5
BASE ADDRESS: N/A
INPUTS 1
AU1
SHEET 5A

V194
BLDG #: 911-B
RACK #: 5466
CHASSIS ID: AGS_RT_TIME
SLOT #: 5
BASE ADDRESS: N/A
INPUTS 2
AU2
SHEET 3A

V194
BLDG #: 911-B
RACK #: 5466
CHASSIS ID: AGS_RT_TIME
SLOT #: 5
BASE ADDRESS: N/A
INPUTS 3
AU3
SHEET 3A

CH8
CH9
CHA
CHB
CHC
CHD
CHE
CHF
ACS

V194
BLDG #: 911-B
RACK #: 5466
CHASSIS ID: AGS_RT_TIME
SLOT #: 5
BASE ADDRESS: N/A
INPUTS 4
AU4
SHEET 5A

V194
BLDG #: 911-B
RACK #: 5466
CHASSIS ID: AGS_RT_TIME
SLOT #: 6
BASE ADDRESS: N/A
INPUTS 3
BT3

V194
BLDG #: 911-B
RACK #: 5466
CHASSIS ID: AGS_RT_TIME
SLOT #: 6
BASE ADDRESS: N/A
INPUTS 4
BT4

V101 EVENT INPUT MOD
BLDG #: 911B
RACK #: 5466
CHASSIS ID: CST.911B.AGS_EVLNK
SLOT #: 7
CH B
AGS FIELD RELOAD

V101 EVENT INPUT MOD
BLDG #: 911B
RACK #: 5466
CHASSIS ID: CST.911B.AGS_EVLNK
SLOT #: 7
CH C
AGE

V101 EVENT INPUT MOD
BLDG #: 911B
RACK #: 5466
CHASSIS ID: CST.911B.AGS_EVLNK
SLOT #: 7
CH D
APP

V101 EVENT INPUT MOD
BLDG #: 911B
RACK #: 5466
CHASSIS ID: CST.911B.AGS_EVLNK
SLOT #: NA
CH E

V101 EVENT INPUT MOD
BLDG #: 911B
RACK #: 5466
CHASSIS ID: CST.911B.AGS_EVLNK
SLOT #: NA
CH F

REV.	ZONE	ECN NO.	DATE	BY	CKR	APP.

-3	-2	-1	REF DESIGNATION	ECN NO.	DESCRIPTION	MFG. DWG NO./ENG. NO.
ANY ROWS						

INTERPRET IN GENERAL ACCORDANCE WITH ASME Y14.24M-1989
UNLESS OTHERWISE SPECIFIED DIMENSIONS ARE IN INCHES
DECIMAL TOLERANCES .X ± .030 .XX ± .015 .XXX ± .005
ANGULAR TOLERANCE ± .5°
OUTSTANDING ECN
NA / FINISH
BREAK SHARP EDGES MAX. XX MIN. XX

Q.A. CATEGORY A-3
DRAWN BY J Pepe 7/27/2000
CHECKED BY
DESIGN APPROVAL
ENGINEER APPROVAL
SUPVR. APPROVAL
NEXT ASSEMBLY

DATE

BROOKHAVEN NATIONAL LABORATORY
UPTON, N.Y. 11973
AGS CONTROLS WIRING DIAGRAM
BLDG 911B
AGS SUPERCYCLE TRIGGER(SLOT11)
SIZE D
V196_2SS
REV. A
DRAWING NUMBER
MATERIAL: ——— SCALE: NA WEIGHT: - SHEET 9

Schoenfeld, Controls 10/18/2004 11:11 AM v196_2ss.dwg

*AUTOCAD

REV.	ZONE	ECN NO.	DATE	BY	CKR	APP.

BOOSTER LINK

BLDG #: 911B
RACK #: 5466
CHASSIS ID: AGS_RT_TIME
SLOT #: 12
A16 BASE ADDRESS: NA

V196
CH0
CH1
CH2
CH3
CH4
CH5
CH6
CH7

V192/193 MOD
BLDG #: 911B
RACK #: 5466
CHASSIS ID: AGS_RT_TIME
SLOT#: 7
XTN STB

V101 EVENT INPUT MOD
BLDG #: 911B
RACK #: 5466
CHASSIS ID: CST.911B.AGS_EVLNK
SLOT#: NA
CH 1

V101 EVENT INPUT MOD
BLDG #: 911B
RACK #: 5466
CHASSIS ID: CST.911B.AGS_EVLNK
SLOT#: NA
CH 2

V101 EVENT INPUT MOD
BLDG #: 911B
RACK #: 5466
CHASSIS ID: CST.911B.AGS_EVLNK
SLOT#: NA
CH 3

V101 EVENT INPUT MOD
BLDG #: 911B
RACK #: 5466
CHASSIS ID: CST.911B.AGS_EVLNK
SLOT#: NA
CH 4

V101 EVENT INPUT MOD
BLDG #: 911B
RACK #: 5466
CHASSIS ID: CST.911B.AGS_EVLNK
SLOT#: NA
CH 5

V101 EVENT INPUT MOD
BLDG #: 911B
RACK #: 5466
CHASSIS ID: CST.911B.AGS_EVLNK
SLOT#: NA
CH 6

V101 EVENT INPUT MOD
BLDG #: 911B
RACK #: 5466
CHASSIS ID: CST.911B.AGS_EVLNK
SLOT#: NA
CH 7

CH8
CH9
CHA
CHB
CHC
CHD
CHE
CHF
ACS

V101 EVENT INPUT MOD
BLDG #: 911B
RACK #: 5466
CHASSIS ID: CST.911B.AGS_EVLNK
SLOT#: NA
CH 8

V101 EVENT INPUT MOD
BLDG #: 911B
RACK #: 5466
CHASSIS ID: CTS.911B.AGS_EVLNK
SLOT#: NA
INPUT 3

V101 EVENT INPUT MOD
BLDG #: 911B
RACK #: 5466
CHASSIS ID: CTS.911B.AGS_EVLNK
SLOT#: NA
INPUT 4

V101 EVENT INPUT MOD
BLDG #: 911B
RACK #: 5466
CHASSIS ID: CST.911B.AGS_EVLNK
SLOT#: NA
CH B

V101 EVENT INPUT MOD
BLDG #: 911B
RACK #: 5466
CHASSIS ID: CST.911B.AGS_EVLNK
SLOT#: NA
CH C

V101 EVENT INPUT MOD
BLDG #: 911B
RACK #: 5466
CHASSIS ID: CST.911B.AGS_EVLNK
SLOT#: NA
CH D

V101 EVENT INPUT MOD
BLDG #: 911B
RACK #: 5466
CHASSIS ID: CST.911B.AGS_EVLNK
SLOT#: NA
CH E

V101 EVENT INPUT MOD
BLDG #: 911B
RACK #: 5466
CHASSIS ID: CST.911B.AGS_EVLNK
SLOT#: NA
CH F

-3	-2	-1	REF DESIGNATOR	ITEM NO.	DESCRIPTION	MAT'L DWG NO./DRG. NO.
QTY REQD						

INTERPRET IN GENERAL ACCORDANCE WITH ASME Y14.24M-1989
UNLESS OTHERWISE SPECIFIED DIMENSIONS ARE IN INCHES
DECIMAL TOLERANCES .X ±.030 .XX ±.015 .XXX ±.005
ANGULAR TOLERANCE ± .5°

Q.A. CATEGORY A-3 | DATE
DRAWN BY J Pepe | 3/1/2000
CHECKED BY
DESIGN APPROVAL
ENGINEER APPROVAL
SUPVR. APPROVAL
NEXT ASSEMBLY

OUTSTANDING ECN | NA FINISH | BREAK SHARP EDGES | MAX. XX MIN. XX

BROOKHAVEN NATIONAL LABORATORY
UPTON, N.Y. 11973
AGS CONTROLS WIRING DIAGRAM
BLDG 911B
BOOSTER V196 TIMEOUT DECODER

SIZE D | DRAWING NUMBER | REV. A
MATERIAL: —— | SCALE: NA | WEIGHT: – | SHEET 10

Controls, C-AD 4/9/2004 1:32 PM v196_1rt.dwg

1 *AUTOCAD

PDF created with FinePrint pdfFactory Pro trial version http://www.fineprint.com

REV.	ZONE	ECN NO.	DATE	BY	CKR	APP.

T198 TRANSITIONAL MODULE
BLDG #: 911B
RACK #: 5466
CHASSIS ID: AGS_RT_TIME
SLOT #: 13 REAR
BASE ADDRESS: XXX

V198 AGS TIMELINE TRIG/BUFFER MOD
BLDG #: 911B
RACK #: 5466
CHASSIS ID: AGS_RT_TIME
SLOT #: 13
BASE ADDRESS: XXX

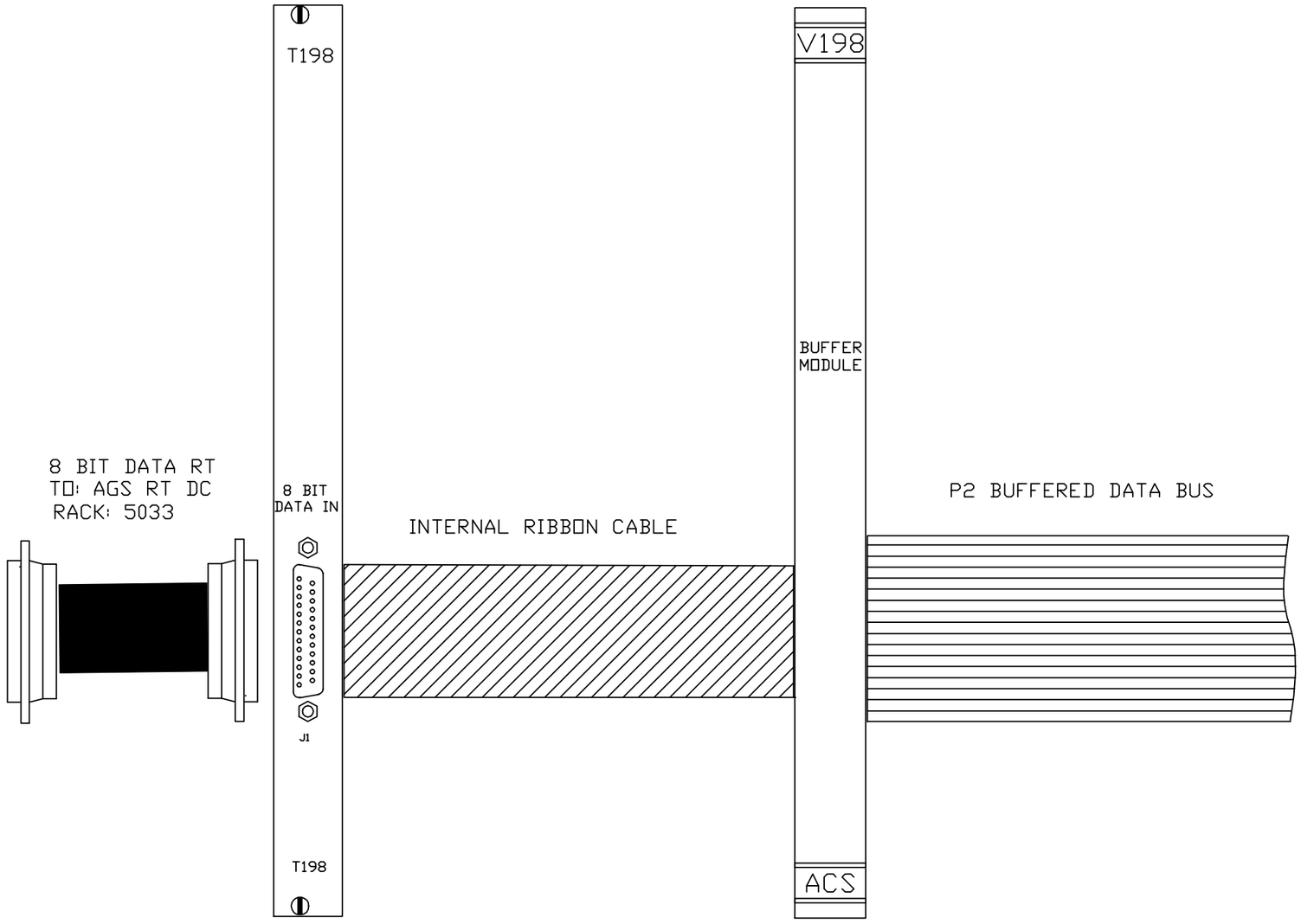

To: V197's
(V198 Drives up to 8 V197's)

ACS, BNL 3/28/00 8:31 AM v198_1rt.dwg

-3	-2	-1	QTY REQD	REF DESIGNATOR	ITEM NO.	DESCRIPTION	MAT'L. DWG NO./BNL NO.

INTERPRET IN GENERAL ACCORDANCE WITH ASME Y14.24M-1989
UNLESS OTHERWISE SPECIFIED DIMENSIONS ARE IN INCHES
DECIMAL TOLERANCES
.X ±.030
.XX ±.015
.XXX ±.005
ANGULAR TOLERANCE ± .5°
NA FINISH
BREAK SHARP EDGES
MAX. XX MIN. XX
OUTSTANDING ECN

Q.A. CATEGORY A-3
DRAWN BY J Pepe 3/9/2000
CHECKED BY
DESIGN APPROVAL
ENGINEER APPROVAL
SUPVR. APPROVAL
NEXT ASSEMBLY

BROOKHAVEN NATIONAL LABORATORY
ASSOCIATED UNIVERSITIES, INC.
UPTON, N.Y. 11973

AGS CONTROLS WIRING DIAGRAM
BLDG 911B
V198 AGS TIMELINE TRIG/BUFF MOD

SIZE D
DRAWING NUMBER
REV. A
MATERIAL: ——— SCALE: NA WEIGHT: — SHEET 11

1 *AUTOCAD

AGS_REAL_TIME EVENTS

BLDG #: 911B
RACK #: 5466
CHASSIS ID: AGS_RT_TIME
SLOT #: 14
A16 BASE ADDRESS: NA

V197

CH0 — V101 EVENT INPUT MOD (BLDG #: 911B, RACK #: 5466, CHASSIS ID: CST.911B.AGS_EVLNK, SLOT#: 8) CH 0 — AGS.GAM_TR_STRT

CH1 — V101 EVENT INPUT MOD (BLDG #: 911B, RACK #: 5466, CHASSIS ID: CST.911B.AGS_EVLNK, SLOT#: 8) CH 1 — AGS.GAM_TR_STOP

CH2 — V101 EVENT INPUT MOD (BLDG #: 911B, RACK #: 5466, CHASSIS ID: CST.911B.AGS_EVLNK, SLOT#: 8) CH 2 — AXT.SLW_SPL_ST

CH3 — V101 EVENT INPUT MOD (BLDG #: 911B, RACK #: 5466, CHASSIS ID: CST.911B.AGS_EVLNK, SLOT#: 8) CH 3 — AXT.BM_SMPL

CH4 — V194 PULSE FANOUT MOD (BLDG #: 911B, RACK #: 5466, CHASSIS ID: CST.911B.AGS_EVLNK, SLOT#: 4) CH 2 — AGT.END_CAL&JAM

CH5 — V101 EVENT INPUT MOD (BLDG #: 911B, RACK #: 5466, CHASSIS ID: CST.911B.AGS_EVLNK, SLOT#: 8) CH 5 — AGS_TM_TR_TRIG

CH6 — V101 EVENT INPUT MOD (BLDG #: 911B, RACK #: 5466, CHASSIS ID: CST.911B.AGS_EVLNK, SLOT#: 8) CH 6 — AGS_TM_HOR_KICK

CH7 — V101 EVENT INPUT MOD (BLDG #: 911B, RACK #: 5466, CHASSIS ID: CST.911B.AGS_EVLNK, SLOT#: 8) CH 7 — AGS_TM_VER_KICK

ACS

CH8 — V101 EVENT INPUT MOD (BLDG #: 911B, RACK #: 5466, CHASSIS ID: CST.911B.AGS_EVLNK, SLOT#: 8) CH 8 — ARF.DEBUNCH.RT

CH9 — V101 EVENT INPUT MOD (BLDG #: 911B, RACK #: 5466, CHASSIS ID: CST.911B.AGS_EVLNK, SLOT#: 8) CH 9 — AGN.INJ_CBM.SP

CHA — V101 EVENT INPUT MOD (BLDG #: 911B, RACK #: 5466, CHASSIS ID: CST.911B.AGS_EVLNK, SLOT#: 8) CH A — AGN.CBM.SP

CHB — V101 EVENT INPUT MOD (BLDG #: 911B, RACK #: 5466, CHASSIS ID: CST.911B.AGS_EVLNK, SLOT#: 8) CH B — AGN.XCBM.SP

CHC — V101 EVENT INPUT MOD (BLDG #: 911B, RACK #: 5466, CHASSIS ID: CST.911B.AGS_EVLNK, SLOT#: 8) CH C — XFMR_CLBRT_PLS.ST

CHD — V101 EVENT INPUT MOD (BLDG #: 911B, RACK #: 5466, CHASSIS ID: CST.911B.AGS_EVLNK, SLOT#: 8) CH D — AGS.SEB_START.RT

CHE — V101 EVENT INPUT MOD (BLDG #: 911B, RACK #: 5466, CHASSIS ID: CST.911B.AGS_EVLNK, SLOT#: 8) CH E — AGN.GNRIC_REAL.TM

CHF — V101 EVENT INPUT MOD (BLDG #: 911B, RACK #: 5466, CHASSIS ID: CST.911B.AGS_EVLNK, SLOT#: 8) CH F — AGN.G10KR_RT_ST

REV.	ZONE	ECN NO.	DATE	BY	CKR	APP.

QTY REQD	REF DESIGNATOR	ITEM NO.	DESCRIPTION	MAT'L DWG NO./BNL NO.

INTERPRET IN GENERAL ACCORDANCE WITH ASME Y14.24M-1989
UNLESS OTHERWISE SPECIFIED DIMENSIONS ARE IN INCHES
DECIMAL TOLERANCES .X ±.030 .XX ±.015 .XXX ±.005 ANGULAR TOLERANCE ± .5°
OUTSTANDING ECN: NA ✓ FINISH — BREAK SHARP EDGES MAX. XX MIN. XX

Q.A. CATEGORY A-3 — DATE
DRAWN BY: J Pepe — 2/22/2000
CHECKED BY
DESIGN APPROVAL
ENGINEER APPROVAL
SUPVR. APPROVAL
NEXT ASSEMBLY

BROOKHAVEN NATIONAL LABORATORY
UPTON, N.Y. 11973
AGS CONTROLS WIRING DIAGRAM
BLDG 911B
AGS TIMELINE TRIGGER (SLOT 14)

SIZE D — DRAWING NUMBER — REV. A
MATERIAL: —— SCALE: NA WEIGHT: – SHEET 12

Controls, bnl 9/7/2004 12:02 PM v197_1rt.dwg

1 *AUTOCAD

REV.	ZONE	ECN NO.	DATE	BY	CKR	APP.

AGS_REAL_TIME
BLDG #: 911B
RACK #: 5466
CHASSIS ID: AGS_RT_TIME
SLOT #: 15
A16 BASE ADDRESS: NA

V197
CH0
CH1
CH2
CH3
CH4
CH5
CH6
CH7

V101 EVENT INPUT MOD
BLDG #: 911B
RACK #: 5466
CHASSIS ID: CST.911B.AGS_EVLNK
SLOT#: 11
CH 0 — ADA.INJEC.1

V101 EVENT INPUT MOD
BLDG #: 911B
RACK #: 5466
CHASSIS ID: CST.911B.AGS_EVLNK
SLOT#: 11
CH 1 — ADA.INJEC.2

V101 EVENT INPUT MOD
BLDG #: 911B
RACK #: 5466
CHASSIS ID: CST.911B.AGS_EVLNK
SLOT#: 11
CH 2 — ADA.INJEC.3

V101 EVENT INPUT MOD
BLDG #: 911B
RACK #: 5466
CHASSIS ID: CST.911B.AGS_EVLNK
SLOT#: 11
CH 3 — ADA.INJEC.4

V101 EVENT INPUT MOD
BLDG #: 911B
RACK #: 5466
CHASSIS ID: CST.911B.AGS_EVLNK
SLOT#: 11
CH 4 — ADA.END_INJ_PORCH

V101 EVENT INPUT MOD
BLDG #: 911B
RACK #: 5466
CHASSIS ID: CST.911B.AGS_EVLNK
SLOT#: 11
CH 5 — ADA.BFORE_TRANS

V101 EVENT INPUT MOD
BLDG #: 911B
RACK #: 5466
CHASSIS ID: CST.911B.AGS_EVLNK
SLOT#: 11
CH 6 — ADA.AFTR_TRANS

V101 EVENT INPUT MOD
BLDG #: 911B
RACK #: 5466
CHASSIS ID: CST.911B.AGS_EVLNK
SLOT#: 11
CH 7 — ADA.BFOR_DEBUNCH

CH8
CH9
CHA
CHB
CHC
CHD
CHE
CHF
ACS

V101 EVENT INPUT MOD
BLDG #: 911B
RACK #: 5466
CHASSIS ID: CST.911B.AGS_EVLNK
SLOT#: 11
CH 8 — ADA.AFTR_DEBUNCH

V101 EVENT INPUT MOD
BLDG #: 911B
RACK #: 5466
CHASSIS ID: CST.911B.AGS_EVLNK
SLOT#: 11
CH 9 — ADA.BGN_SEP_SPILL

V101 EVENT INPUT MOD
BLDG #: 911B
RACK #: 5466
CHASSIS ID: CST.911B.AGS_EVLNK
SLOT#: 11
CH A — ADA.MID_SEB_SPILL

V101 EVENT INPUT MOD
BLDG #: 911B
RACK #: 5466
CHASSIS ID: CST.911B.AGS_EVLNK
SLOT#: 11
CH B — ADA.END_SEB_SPILL

V101 EVENT INPUT MOD
BLDG #: 911B
RACK #: 5466
CHASSIS ID: CST.911B.AGS_EVLNK
SLOT#: 11
CH C — ADA.RING_DIAGN

V101 EVENT INPUT MOD
BLDG #: 911B
RACK #: 5466
CHASSIS ID: CST.911B.AGS_EVLNK
SLOT#: 11
CH D — ADA.SEB_DIAGN

V101 EVENT INPUT MOD
BLDG #: 911B
RACK #: 5466
CHASSIS ID: CST.911B.AGS_EVLNK
SLOT#: 11
CH E — ADA.PRE_BEAM

V101 EVENT INPUT MOD
BLDG #: 911B
RACK #: 5466
CHASSIS ID: CST.911B.AGS_EVLNK
SLOT#: 11
CH F — ADA.LATE_READS

-3	-2	-1 QTY REQD	REF DESIGNATOR	ITEM NO.	DESCRIPTION	MAT'L DWG NO./BNL NO.

INTERPRET IN GENERAL ACCORDANCE WITH ASME Y14.24M-1989
UNLESS OTHERWISE SPECIFIED DIMENSIONS ARE IN INCHES
DECIMAL TOLERANCES .X ±.030 .XX ±.015 .XXX ±.005 ANGULAR TOLERANCE ± .5°
NA FINISH
BREAK SHARP EDGES MAX. XX MIN. XX
OUTSTANDING ECN

Q.A. CATEGORY A-3
DRAWN BY J Pepe DATE 2/22/2000
CHECKED BY
DESIGN APPROVAL
ENGINEER APPROVAL
SUPVR. APPROVAL
NEXT ASSEMBLY

BROOKHAVEN NATIONAL LABORATORY
UPTON, N.Y. 11973
AGS CONTROLS WIRING DIAGRAM
BLDG 911B
AGS TIMELINE TRIGGER (SLOT 15)
SIZE D DRAWING NUMBER REV. A
MATERIAL: —— SCALE: NA WEIGHT: — SHEET 13

ACS, BNL 3/27/00 11:49 AM v197_2rt.dwg

*AUTOCAD

REV.	ZONE	ECN NO.	DATE	BY	CKR	APP.

AGS_REAL_TIME
BLDG #: 911B
RACK #: 5466
CHASSIS ID: AGS_RT_TIME
SLOT #: 16
A16 BASE ADDRESS: NA

V197
CH0
CH1
CH2
CH3
CH4
CH5
CH6
CH7

V101 EVENT INPUT MOD
BLDG #: 911B
RACK #: 5466
CHASSIS ID: CST.911B.AGS_EVLNK
SLOT#: 12
CH 0
ADA.RLY_SEB_SPILL

V101 EVENT INPUT MOD
BLDG #: 911B
RACK #: 5466
CHASSIS ID: CST.911B.AGS_EVLNK
SLOT#: 12
CH 1
ADA.LAT_SEB_SPILL

V101 EVENT INPUT MOD
BLDG #: 911B
RACK #: 5466
CHASSIS ID: CST.911B.AGS_EVLNK
SLOT#: 9
CH 2
SEB.F10_HS_STRT

V101 EVENT INPUT MOD
BLDG #: 911B
RACK #: 5466
CHASSIS ID: CST.911B.AGS_EVLNK
SLOT#: 9
CH 3
ATVD.DIA_MEM_ST

V101 EVENT INPUT MOD
BLDG #: 911B
RACK #: 5466
CHASSIS ID: CST.911B.AGS_EVLNK
SLOT#: 12
CH 4
AGS.RLRM_READ1.RT

V101 EVENT INPUT MOD
BLDG #: 911B
RACK #: 5466
CHASSIS ID: CST.911B.AGS_EVLNK
SLOT#: 12
CH 5
AGS.RLRM_READ2.RT

V194 PULSE FANOUT MOD
BLDG #: 911B
RACK #: 5322
CHASSIS ID: CFE-911-RES
SLOT#: 5
INPUT 4
REF SHEET 32
GFEBREQUEST (EXT SOURCE)

V101 EVENT INPUT MOD
BLDG #: 911B
RACK #: 5466
CHASSIS ID: CST.911B.AGS_EVLNK
SLOT#: 12
CH 7
ADA.IPM_READ.RT

ACS
CH8
CH9
CHA
CHB
CHC
CHD
CHE
CHF

V101 EVENT INPUT MOD
BLDG #: 911B
RACK #: 5466
CHASSIS ID: CST.911B.AGS_EVLNK
SLOT#: 12
CH 8
AGN.MCR_TR_1.RT

V101 EVENT INPUT MOD
BLDG #: 911B
RACK #: 5466
CHASSIS ID: CST.911B.AGS_EVLNK
SLOT#: 12
CH 9
AGN.MCR_TR_2.RT

V101 EVENT INPUT MOD
BLDG #: 911B
RACK #: 5466
CHASSIS ID: CST.911B.AGS_EVLNK
SLOT#: 12
CH A
AGN.MCR_TR_3.RT

V101 EVENT INPUT MOD
BLDG #: 911B
RACK #: 5466
CHASSIS ID: CST.911B.AGS_EVLNK
SLOT#: 12
CH B
AGN.MCR_TR_4.RT

V101 EVENT INPUT MOD
BLDG #: 911B
RACK #: 5466
CHASSIS ID: CST.911B.AGS_EVLNK
SLOT#: 12
CH C
AGN.MCR_TR_5.RT

V101 EVENT INPUT MOD
BLDG #: 911B
RACK #: 5466
CHASSIS ID: CST.911B.AGS_EVLNK
SLOT#: 12
CH D
AGN.MCR_TR_6.RT

V101 EVENT INPUT MOD
BLDG #: 911B
RACK #: 5466
CHASSIS ID: CST.911B.AGS_EVLNK
SLOT#: 12
CH E
AGN.MCR_TR_7.RT

V101 EVENT INPUT MOD
BLDG #: 911B
RACK #: 5466
CHASSIS ID: CST.911B.AGS_EVLNK
SLOT#: 12
CH F
AGN.MCR_TR_8.RT

-3	-2	-1 QTY REQD	REF DESIGNATOR	ITEM NO.	DESCRIPTION	MAT'L DWG NO./BNL NO.

INTERPRET IN GENERAL ACCORDANCE WITH ASME Y14.24M-1989
UNLESS OTHERWISE SPECIFIED DIMENSIONS ARE IN INCHES
DECIMAL TOLERANCES .X ±.030 .XX ±.015 .XXX ±.005 ANGULAR TOLERANCE ± .5°
OUTSTANDING ECN
NA FINISH
BREAK SHARP EDGES MAX. XX MIN. XX

Q.A. CATEGORY A-3		DATE
DRAWN BY	J Pepe	2/22/2000
CHECKED BY		
DESIGN APPROVAL		
ENGINEER APPROVAL		
SUPVR. APPROVAL		
NEXT ASSEMBLY		

BROOKHAVEN NATIONAL LABORATORY
UPTON, N.Y. 11973
AGS CONTROLS WIRING DIAGRAM
BLDG 911B
AGS TIMELINE TRIGGER (SLOT 16)

SIZE D | DRAWING NUMBER | REV. A
MATERIAL: ——— | SCALE: NA | WEIGHT: – | SHEET 14

ACS, BNL 3/27/00 11:54 AM v197_3rt.dwg

*AUTOCAD

AGS_REAL_TIME
BLDG #: 911B
RACK #: 5466
CHASSIS ID: AGS_RT_TIME
SLOT #: 17
A16 BASE ADDRESS: NA

V197
CH0
CH1
CH2
CH3
CH4
CH5
CH6
CH7

V101 EVENT INPUT MOD
BLDG #: 911B
RACK #: 5466
CHASSIS ID: CST.911B.AGS_EVLNK
SLOT#: 13
CH 0 — AMC.CORR_SMPL.RT

V101 EVENT INPUT MOD
BLDG #: 911B
RACK #: 5466
CHASSIS ID: CST.911B.AGS_EVLNK
SLOT#: 13
CH 1 — AMC.CORR_STOP.RT

V101 EVENT INPUT MOD
BLDG #: 911B
RACK #: 5466
CHASSIS ID: CST.911B.AGS_EVLNK
SLOT#: 13
CH 2 — AMC.CORR_LIMIT.RT

V101 EVENT INPUT MOD
BLDG #: 911B
RACK #: 5466
CHASSIS ID: CST.911B.AGS_EVLNK
SLOT#: 13
CH 3 — ADA.SERVO_READ

V101 EVENT INPUT MOD
BLDG #: 911B
RACK #: 5466
CHASSIS ID: CST.911B.AGS_EVLNK
SLOT#: 13
CH 4 — ADA.ACME_READ

V101 EVENT INPUT MOD
BLDG #: 911B
RACK #: 5466
CHASSIS ID: CST.911.AGS_EVLNK
SLOT#: 13
CH 5 — ART.136_88

V101 EVENT INPUT MOD
BLDG #: 911B
RACK #: 5466
CHASSIS ID: CST.911B.AGS_EVLNK
SLOT#: 13
CH 6 — ART.137_89

V101 EVENT INPUT MOD
BLDG #: 911B
RACK #: 5466
CHASSIS ID: CST.911B.AGS_EVLNK
SLOT#: 13
CH 7 — ART.138_8A

CH8
CH9
CHA
CHB
CHC
CHD
CHE
CHF
ACS

V101 EVENT INPUT MOD
BLDG #: 911B
RACK #: 5466
CHASSIS ID: CST.911B.AGS_EVLNK
SLOT#: 13
CH 8 — ART.139_8B

V101 EVENT INPUT MOD
BLDG #: 911B
RACK #: 5466
CHASSIS ID: CST.911B.AGS_EVLNK
SLOT#: 13
CH 9 — ART.140_8C

V101 EVENT INPUT MOD
BLDG #: 911B
RACK #: 5466
CHASSIS ID: CST.911B.AGS_EVLNK
SLOT#: 13
CH A — ART.141_8D

V101 EVENT INPUT MOD
BLDG #: 911B
RACK #: 5466
CHASSIS ID: CST.911B.AGS_EVLNK
SLOT#: 13
CH B — AMD.PUE.READ1.RT

V101 EVENT INPUT MOD
BLDG #: 911B
RACK #: 5466
CHASSIS ID: CST.911B.AGS_EVLNK
SLOT#: 13
CH C — ART.164_A4

V101 EVENT INPUT MOD
BLDG #: 911B
RACK #: 5466
CHASSIS ID: CST.911B.AGS_EVLNK
SLOT#: 13
CH D — ART.165_A5

V101 EVENT INPUT MOD
BLDG #: 911B
RACK #: 5466
CHASSIS ID: CST.911B.AGS_EVLNK
SLOT#: 13
CH E — ART.166_A6

V101 EVENT INPUT MOD
BLDG #: 911B
RACK #: 5466
CHASSIS ID: CST.911B.AGS_EVLNK
SLOT#: 13
CH F — ART.167_A7
THIS EVENT IS BEING USED BY TANDEM.

REV.	ZONE	ECN NO.	DATE	BY	CKR	APP.

-3	-2	-1	REF DESIGNATOR	ITEM NO.	DESCRIPTION	MAT'L DWG NO./BNL NO.
QTY REQD						

INTERPRET IN GENERAL ACCORDANCE WITH ASME Y14.24M–1989
UNLESS OTHERWISE SPECIFIED DIMENSIONS ARE IN INCHES
DECIMAL TOLERANCES .X ±.030 .XX ±.015 .XXX ±.005
ANGULAR TOLERANCE ± .5°
OUTSTANDING ECN: NA
FINISH: BREAK SHARP EDGES MAX. XX MIN. XX

Q.A. CATEGORY A-3
DRAWN BY: J Pepe — DATE: 2/22/2000
CHECKED BY
DESIGN APPROVAL
ENGINEER APPROVAL
SUPVR. APPROVAL
NEXT ASSEMBLY

BROOKHAVEN NATIONAL LABORATORY
UPTON, N.Y. 11973
AGS CONTROLS WIRING DIAGRAM
BLDG 911B
AGS TIMELINE TRIGGER (SLOT 17)
SIZE D — DRAWING NUMBER — REV. A
MATERIAL: — SCALE: NA WEIGHT: – SHEET 15

CONTROLS- 2/6/02 11:44 AM v197_4rt.dwg

*AUTOCAD

REV.	ZONE	ECN NO.	DATE	BY	CKR	APP.

Bill Venegas, BNL 5/6/2003 4:10 PM v108_fec.dwg

FRONT END COMPUTER
BLDG #: 911B
RACK #: 5466
CHASSIS ID: AGS EVENT LINK
SLOT#: 1
FEC NAME: CST.911B.AGS_EVLNK

ETHERNET NETWORK

REF. NETWORK DIAGRAM

DEVICE: V108 UTILITY MODULE
BLDG #: 911B
RACK #: 5466
CHASSIS ID: CST.911B.AGS_EVLNK
SLOT #: 3
A24 BASE ADDRESS: 0x00400

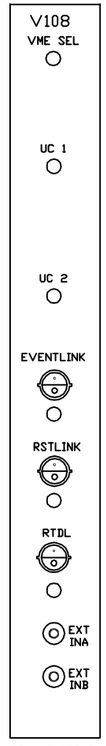

ASSY# 94028094

EVENT LINK
BLDG #: 911B
RACK #: 5466
FANOUT #: A

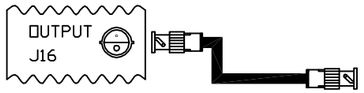

RESET LINK
BLDG #: 911B
RACK #: 5035
FANOUT #: V

REAL TIME DATA LINK
BLDG #: 911B
RACK #: 5035
FANOUT #: U

ASSY# 94028176
LENGTH AS REQUIRED
(TYP 3 PLACES)

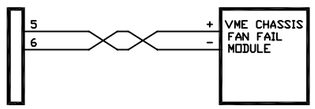

CONNECT TO P2 PINS
ON REAR OF VME CHASSIS
CABLE & CONNECTOR SUPPLIED
WITH VME CHASSIS

JUMPER LIST

Remote reset pulls VME SYS Reset.
E58-E60, E59-E61

A24 BASE ADDRESS= 4000h
E57-E13, E2-E14, E3-E15, E4-E16, E5-E17, E6-E18
E7-E19, E8-E20, E9-E21, E10-E22, E11-E24, E57-E23
SW1=OPEN
SW2=CLOSED
SW3=OPEN
SW4=OPEN

RESET CODE= FC3C
1 RC1D7 hardwired TO +5V
1 RC1D6 E37 jumper to +5V using E25-E30
1 RC1D5 E38 jumper to +5V using E25-E30
1 RC1D4 E39 jumper to +5V using E25-E30

1 RC1D3 E40 jumper to +5V using E25-E30
1 RC1D2 E41 jumper to +5V using E25-E30
0 RC1D1 E42 jumper to GND using E31-E36
0 RC1D0 E43 jumper to GND using E31-E36

0 RC2D7 hardwired to GND
0 RC2D6 E44 jumper to GND using E31-E36
1 RC2D5 E45 jumper to +5V using E25-30
1 RC2D4 E46 jumper to +5V using E25-30

1 RC2D3 E47 jumper to +5V using E25-E30
1 RC2D2 E48 jumper to +5V using E25-E30
0 RC2D1 E49 jumper to GND using E31-E36
0 RC2D0 E50 jumper to GND using E31-E36

-3	-2	-1	QTY REQD	REF DESIGNATOR	ITEM NO.	DESCRIPTION	MAT'L DWG NO./DWL NO.

INTERPRET IN GENERAL ACCORDANCE WITH ASME Y14.24M-1989
UNLESS OTHERWISE SPECIFIED DIMENSIONS ARE IN INCHES
DECIMAL TOLERANCES .X ±.030 .XX ±.015 .XXX ±.005
ANGULAR TOLERANCE ± .5'
NA FINISH
BREAK SHARP EDGES MAX. XX MIN. XX
OUTSTANDING ECN
NEXT ASSEMBLY

Q.A. CATEGORY	A-3	DATE
DRAWN BY	J Pepe	3/1/2000
CHECKED BY		
DESIGN APPROVAL		
ENGINEER APPROVAL		
SUPVR. APPROVAL		

BROOKHAVEN NATIONAL LABORATORY
UPTON, N.Y. 11973
AGS CONTROLS WIRING DIAGRAM
911B, VME CST.911B.AGS_EVLNK
FT END COMP/V108 UTIL MODULE

SIZE D DRAWING NUMBER REV. A
MATERIAL: —— SCALE: NA WEIGHT: – SHEET 16

*AUTOCAD

REV.	ZONE	ECN NO.	DATE	BY	CKR	APP.

Schoenfeld, Controls 10/18/2004 11:13 AM v100_evlnk.dwg

AGS EVENT LINK OUTPUT ENCODER

V100
BLDG #: 911B
RACK #: 5466
CHASSIS ID: CST.911B.AGS_EVLNK
SLOT #: 5
A16 BASE ADDRESS: 0x3000

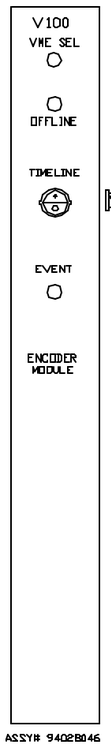

ASSY# 94028046

AGS EVENT LINK FANOUT MODULE

BLDG # 911B
RACK # 5466
FANOUT # A

ASSY # DD9-E2442-5

INPUT J1

ASSY# 94028176
LENGTH AS REQUIRED

OUTPUT

J2	To: RK5481 CFE-911-AGSB11, SLOT 3, V10B REF SHEET ?
J3	To: RK5481 CFE-911-AGSB11, SLOT 4, V113 REF SHEET ?
J4	To: RK5481 CFE-911-AGSB11, SLOT 13, V11B REF SHEET ?
J5	To: RK5481 CFE-911-AGSB11, SPARE REF SHEET ?
J6	To: RK3494 CEX-911-AGSB01, SLOT 19, V120 REF SHEET ?
J7	To: RK3494 CEX-911-AGSB01, SLOT 21, V120 REF SHEET ?
J8	To: RK 5649 911B F/O CHASSIS SLOT 4, CH1 RF BLDG 925 TIMING
J9	SPARE
J10	To: INST LAB 911A RM 142
J11	SPARE
J12	To: RK5466 CFE-911B-RTDL1 SLOT 7 V202 REF SHEET 23E (TTL LEVEL FOR SCOPE TRIGGER IN MCR)
J13	TO RK 5466, CFE-911B-RTDL1 V10B, SLOT 3 REF SHEET 22
J14	To: RK5466 CST.911B.AGS_EVLNK, SLOT 3, V10B REF SHEET 16
J15	To: SPARE REF SHEET XX
J16	
J17	

AGS EVLNK FANOUT MOD

BLDG #: 911B
RACK #: 3035
FANOUT #: T

ASSY# DD9-E-2442

INPUT J1

AGS EVLNK FANOUT MOD

BLDG #: 911B
RACK #: 3035
FANOUT #: V

ASSY# DD9-E-2442

INPUT J1

-3	-2	-1	REF DESIGNATION	ECN NO.	DESCRIPTION	MFG. DWG HOLDING NO.
ANY ABOVE						

INTERPRET IN GENERAL ACCORDANCE WITH ASME Y14.24M-1989

UNLESS OTHERWISE SPECIFIED DIMENSIONS ARE IN INCHES

DECIMAL TOLERANCES
.X ± .030
.XX ± .015
.XXX ± .005
ANGULAR TOLERANCE ± .5°

NA FINISH

BREAK SHARP EDGES
MAX. XX MIN. XX

OUTSTANDING ECN

Q.A. CATEGORY A-3

		DATE
DRAWN BY	J Pepe	3/1/2000
CHECKED BY		
DESIGN APPROVAL		
ENGINEER APPROVAL		
SUPVR. APPROVAL		

NEXT ASSEMBLY

BROOKHAVEN NATIONAL LABORATORY
UPTON, N.Y. 11973

AGS CONTROLS WIRING DIAGRAM

BLDG 911B

AGS EVENT LINK

SIZE D | V100_EVLNK | REV. A
DRAWING NUMBER

MATERIAL: ——— | SCALE: NA | WEIGHT: - | SHEET 17

8 7 6 5 4 3 2 1 *AUTOCAD

Schoenfeld, Controls 10/18/2004 11:17 AM RK5035_FANOUTS_T_W.dwg

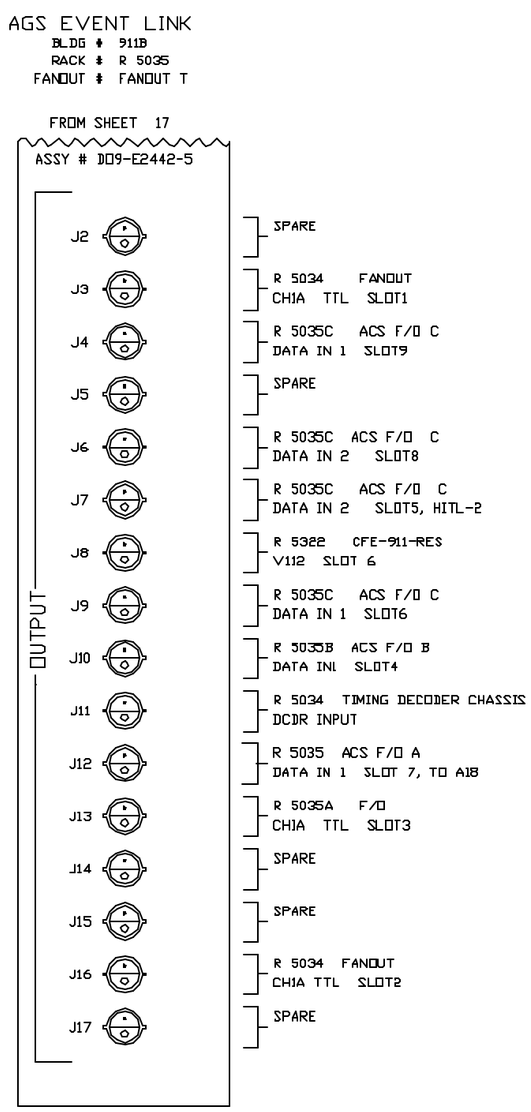

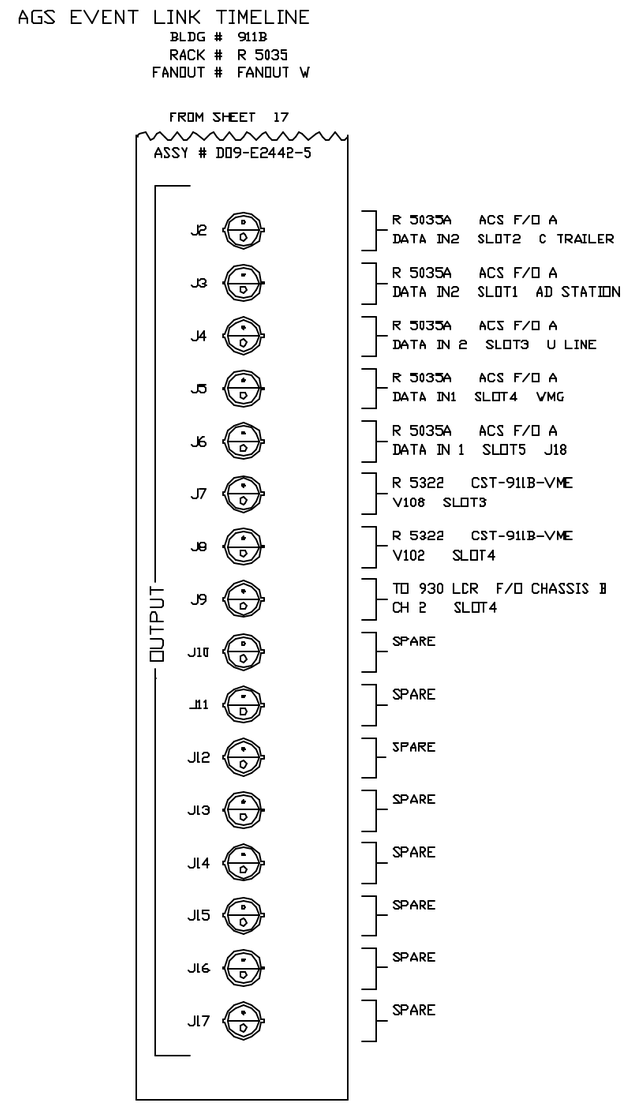

REV.	ZONE	ECN NO.	DATE	BY	CKR	APP.

INTERPRET IN GENERAL ACCORDANCE WITH ASME Y14.24M-1989	Q.A. CATEGORY A-3	DATE	BROOKHAVEN NATIONAL LABORATORY UPTON, N.Y. 11973
UNLESS OTHERWISE SPECIFIED DIMENSIONS ARE IN INCHES	DRAWN BY Steve Lenski		CA DIVISION
DECIMAL TOLERANCES .X ±.030 .XX ±.015 .XXX ±.005 ANGULAR TOLERANCE ± .5°	CHECKED BY		BLDG 911B
	DESIGN APPROVAL		AGS EVENTLINK FANOUTS T & W
	ENGINEER APPROVAL		SIZE D — RK5035_FANOUTS_T_W — REV. A
	SUPVR. APPROVAL		DRAWING NUMBER
NA FINISH — BREAK SHARP EDGES MAX. XX MIN. XX	NEXT ASSEMBLY		MATERIAL: FANOUTS — SCALE: FULL — WEIGHT: - — SHEET 17A

*AUTOCAD

REV.	ZONE	ECN NO.	DATE	BY	CKR	APP.

EVENT INPUT MODULE (0)

BLDG #: 911B
RACK #: 5466
CHASSIS ID: CST.911B.AGS_EVLNK
SLOT #: 6
A16 BASE ADDRESS: NA

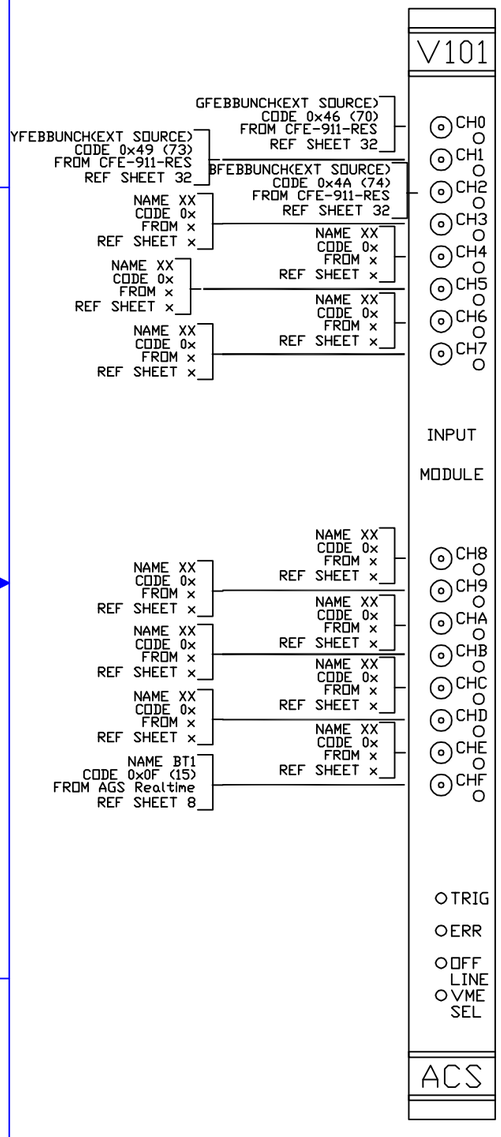

EVENT INPUT MODULE (1)

BLDG #: 911B
RACK #: 5466
CHASSIS ID: CST.911B.AGS_EVLNK
SLOT #: 7
A16 BASE ADDRESS: NA

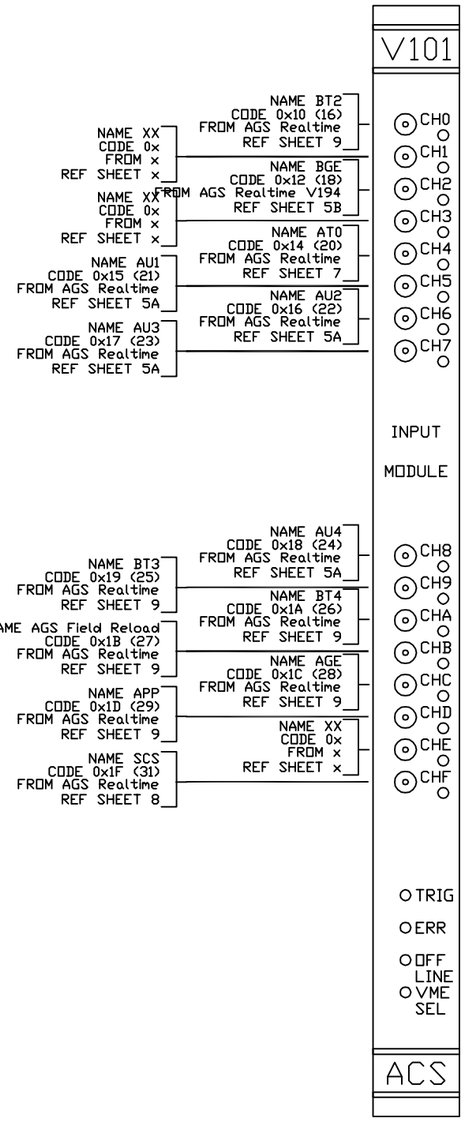

EVENT INPUT MODULE (2)

BLDG #: 911B
RACK #: 5466
CHASSIS ID: CST.911B.AGS_EVLNK
SLOT #: 8
A16 BASE ADDRESS: NA

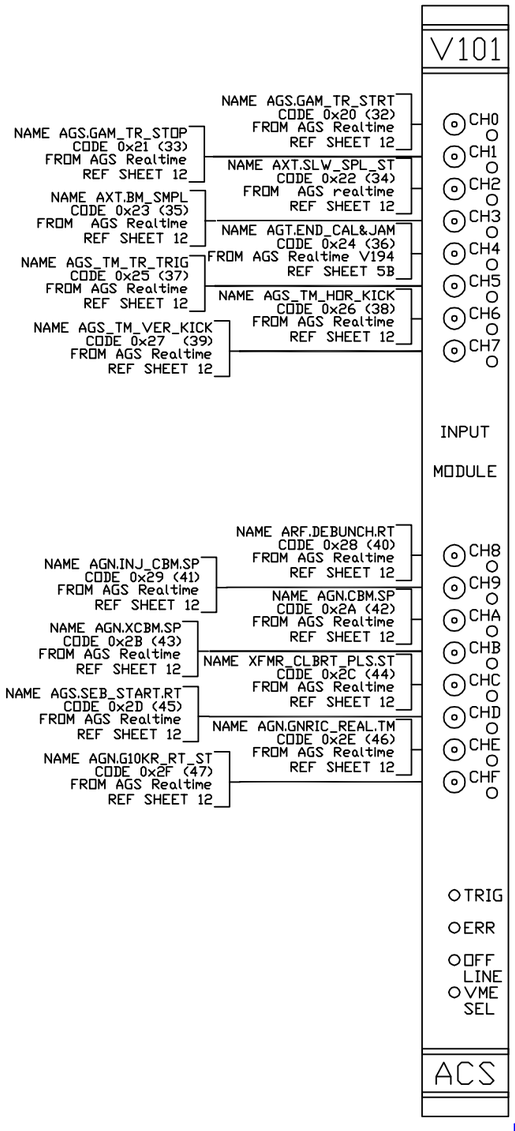

EVENT INPUT MODULE (3)

BLDG #: 911B
RACK #: 5466
CHASSIS ID: CST.911B.AGS_EVLNK
SLOT #: 9
A16 BASE ADDRESS: NA

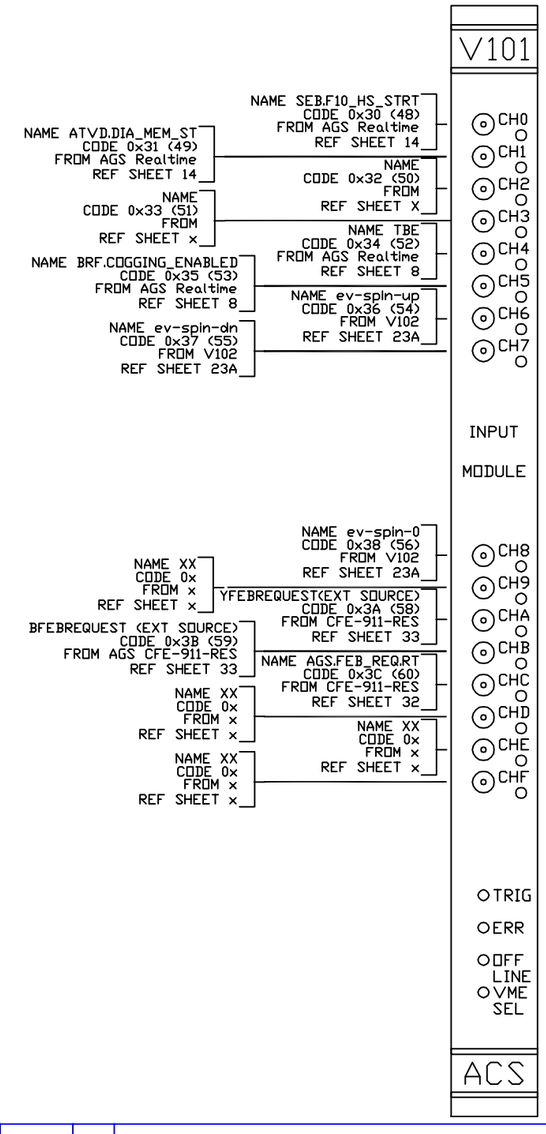

-3	-2	-1	REF DESIGNATOR	ITEM NO.	DESCRIPTION	MAT'L DWG NO./BNL NO.
QTY REQD						

INTERPRET IN GENERAL ACCORDANCE WITH ASME Y14.24M-1989
UNLESS OTHERWISE SPECIFIED DIMENSIONS ARE IN INCHES
DECIMAL TOLERANCES .X ±.030 .XX ±.015 .XXX ±.005
ANGULAR TOLERANCE ± .5°
OUTSTANDING ECN
NA
FINISH
BREAK SHARP EDGES MAX. XX MIN. XX

Q.A. CATEGORY A-3 | DATE
DRAWN BY J Pepe 2/22/2000
CHECKED BY
DESIGN APPROVAL
ENGINEER APPROVAL
SUPVR. APPROVAL
NEXT ASSEMBLY

BROOKHAVEN NATIONAL LABORATORY
UPTON, N.Y. 11973
AGS CONTROLS WIRING DIAGRAM
BLDG 911B
AGS EVENT LINK INPUTS

SIZE D | DRAWING NUMBER | REV. A
MATERIAL: ——— | SCALE: NA | WEIGHT: – | SHEET 18

Controls, bnl 9/7/2004 1:08 PM v101_1evlnk.dwg

*AUTOCAD

REV.	ZONE	ECN NO.	DATE	BY	CKR	APP.

EVENT INPUT MODULE (4)

BLDG #: 911B
RACK #: 5466
CHASSIS ID: CST.911B.AGS_EVLNK
SLOT #: 10
A16 BASE ADDRESS: NA

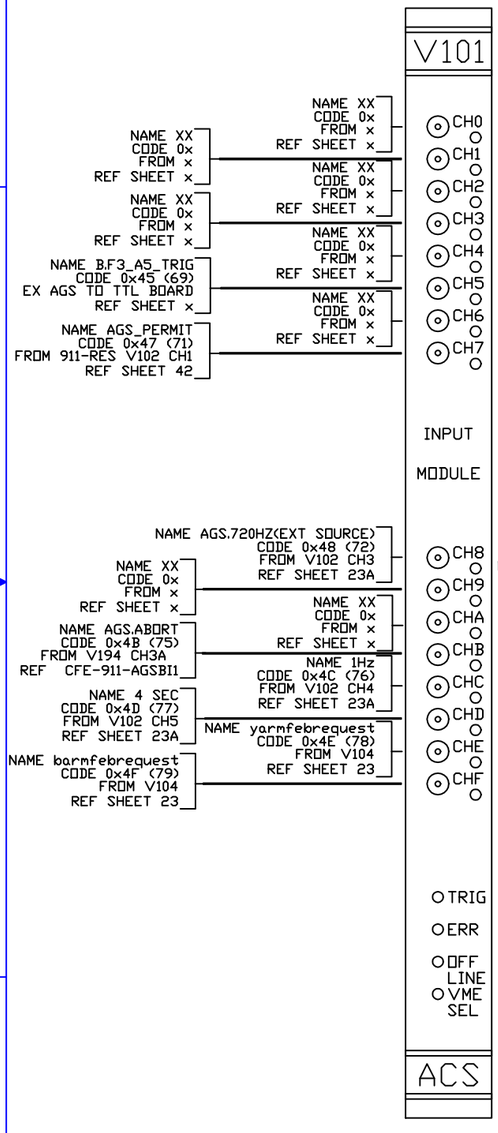

EVENT INPUT MODULE (5)

BLDG #: 911B
RACK #: 5466
CHASSIS ID: CST.911B.AGS_EVLNK
SLOT #: 11
A16 BASE ADDRESS: NA

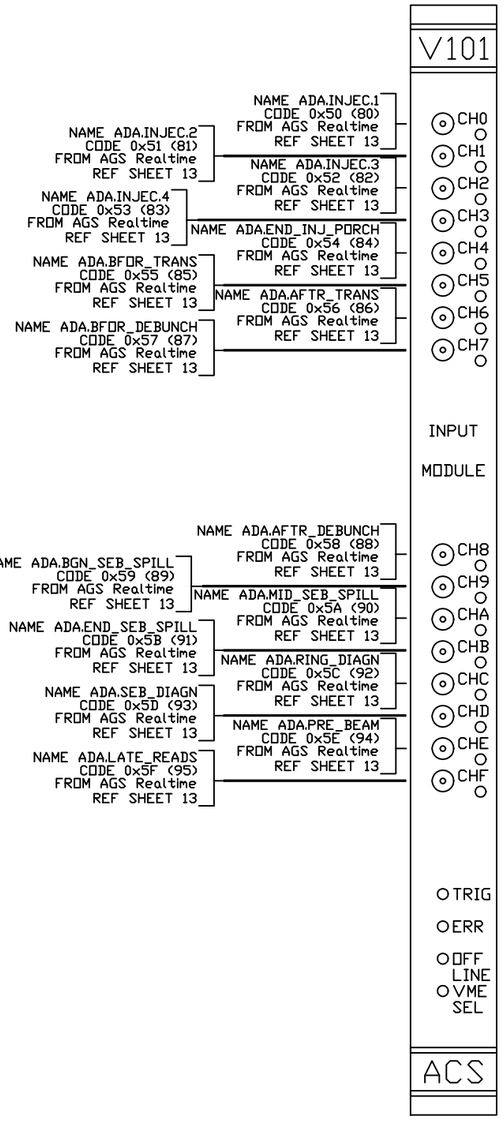

EVENT INPUT MODULE (6)

BLDG #: 911B
RACK #: 5466
CHASSIS ID: CST.911B.AGS_EVLNK
SLOT #: 12
A16 BASE ADDRESS: NA

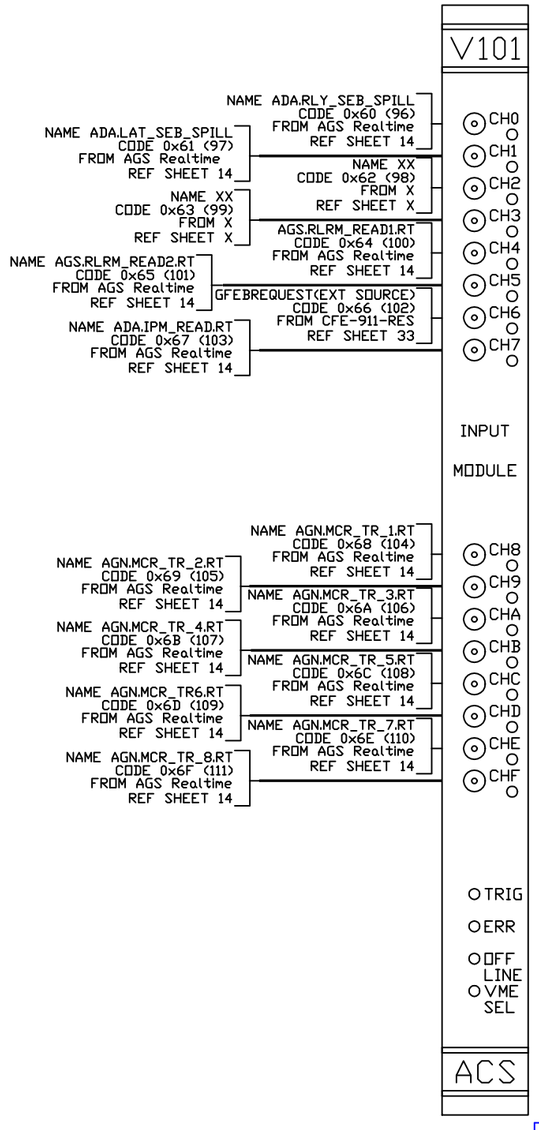

EVENT INPUT MODULE (7)

BLDG #: 911B
RACK #: 5466
CHASSIS ID: CST.911B.AGS_EVLNK
SLOT #: 13
A16 BASE ADDRESS: NA

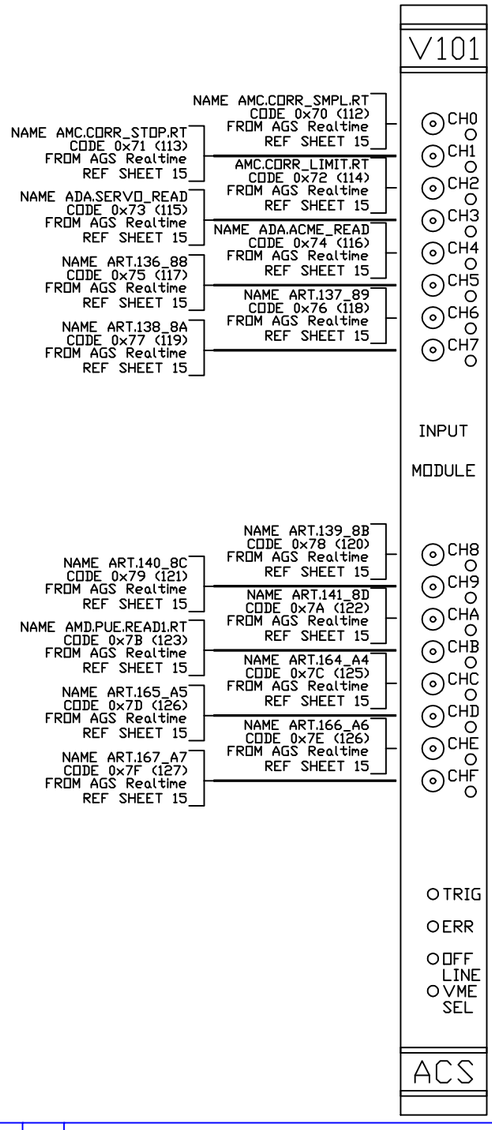

-3	-2	-1	REF DESIGNATOR	ITEM NO.	DESCRIPTION	MAT'L DWG NO./BNL NO.
QTY REQD						

INTERPRET IN GENERAL ACCORDANCE WITH ASME Y14.24M-1989
UNLESS OTHERWISE SPECIFIED DIMENSIONS ARE IN INCHES
DECIMAL TOLERANCES .X ±.030 .XX ±.015 .XXX ±.005
ANGULAR TOLERANCE ± .5°
FINISH: NA
BREAK SHARP EDGES MAX. XX MIN. XX
OUTSTANDING ECN

Q.A. CATEGORY A-3
DRAWN BY: J Pepe 2/22/2000
CHECKED BY
DESIGN APPROVAL
ENGINEER APPROVAL
SUPVR. APPROVAL
NEXT ASSEMBLY

BROOKHAVEN NATIONAL LABORATORY
UPTON, N.Y. 11973
AGS CONTROLS WIRING DIAGRAM
BLDG 911B
AGS EVENT LINK INPUTS

SIZE D | DRAWING NUMBER | REV. A
MATERIAL: ——— | SCALE: NA | WEIGHT: – | SHEET 19

BNL 10/19/01 9:35 AM v101_2evlnk.dwg

*AUTOCAD

REV.	ZONE	ECN NO.	DATE	BY	CKR	APP.

EVENT INPUT MODULE (8)

BLDG #: 911B
RACK #: 5466
CHASSIS ID: CST.911B.AGS_EVLNK
SLOT #: 14
A16 BASE ADDRESS: NA

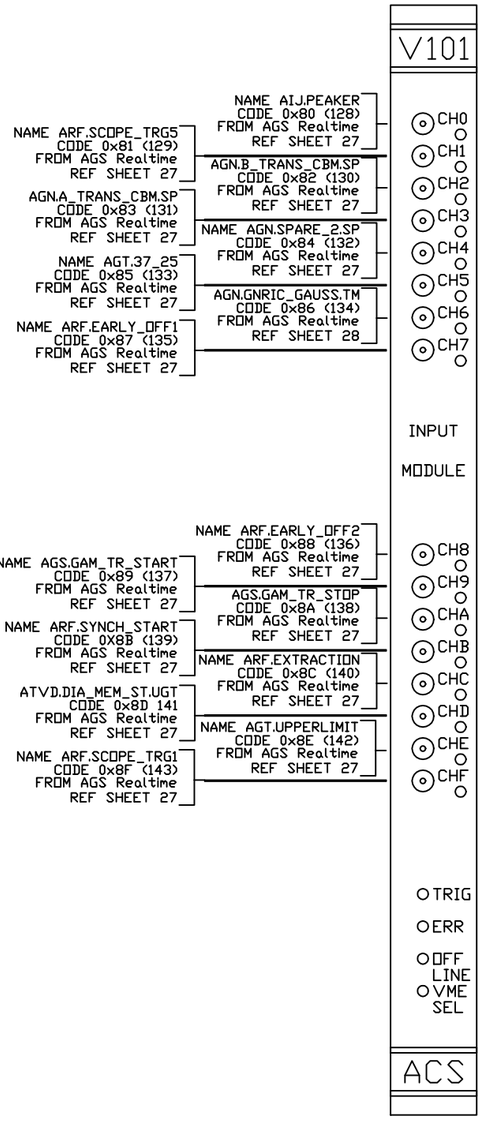

EVENT INPUT MODULE (9)

BLDG #: 911B
RACK #: 5466
CHASSIS ID: CST.911B.AGS_EVLNK
SLOT #: 15
A16 BASE ADDRESS: NA

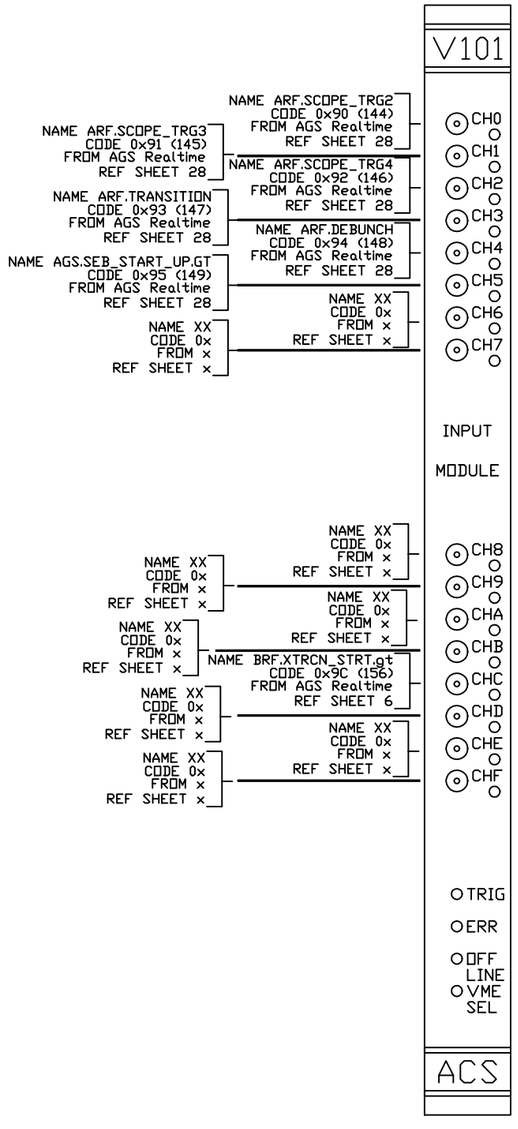

EVENT INPUT MODULE (A)

BLDG #: 911B
RACK #: 5466
CHASSIS ID: CST.911B.AGS_EVLNK
SLOT #: 16
A16 BASE ADDRESS: NA

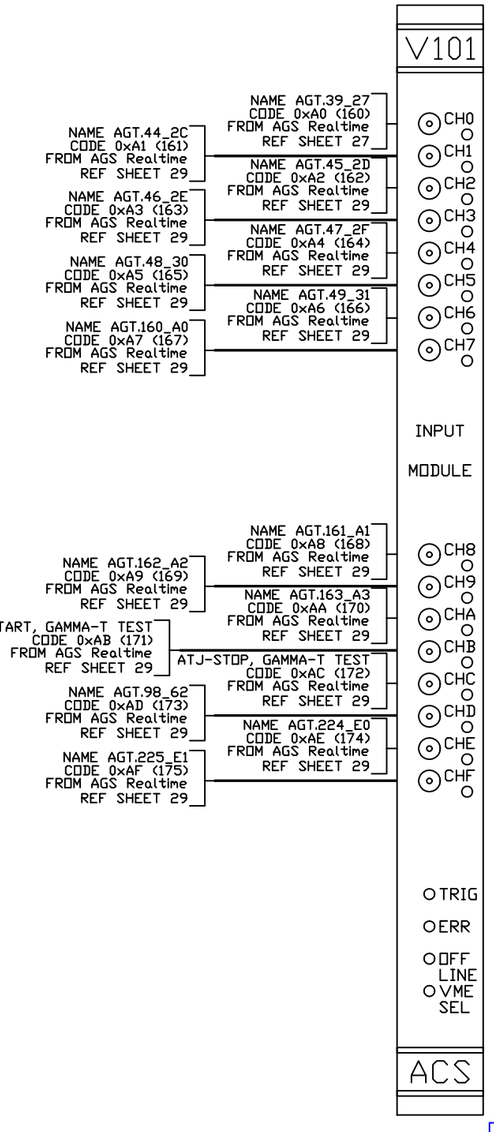

EVENT INPUT MODULE (B)

BLDG #: 911B
RACK #: 5466
CHASSIS ID: CST.911B.AGS_EVLNK
SLOT #: 17
A16 BASE ADDRESS: NA

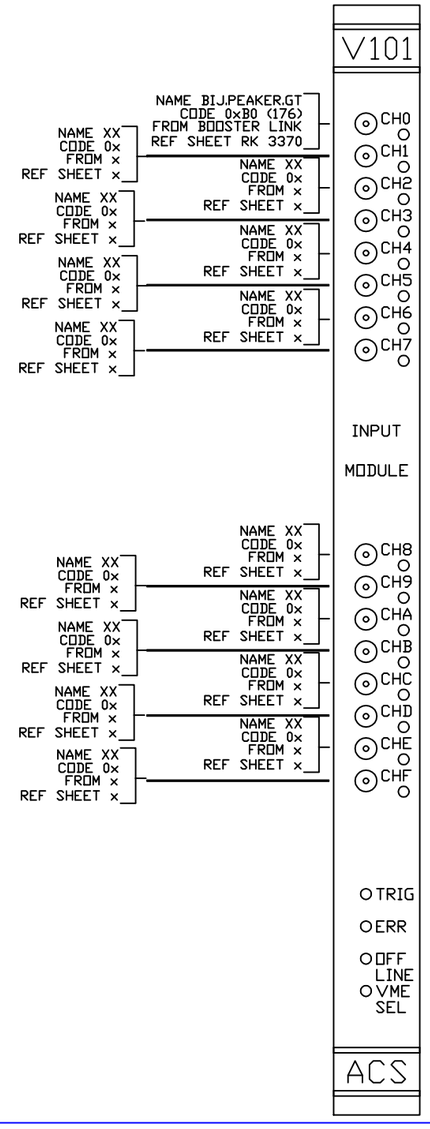

CONTROLS- 2/6/02 11:56 AM v101_3evlnk.dwg

-3	-2	-1	QTY REQD	REF DESIGNATOR	ITEM NO.	DESCRIPTION	MAT'L DWG NO./BNL NO.

INTERPRET IN GENERAL ACCORDANCE WITH ASME Y14.24M-1989	Q.A. CATEGORY A-3	DATE	BROOKHAVEN NATIONAL LABORATORY
	DRAWN BY J Pepe	2/13/2000	UPTON, N.Y. 11973
UNLESS OTHERWISE SPECIFIED DIMENSIONS ARE IN INCHES	CHECKED BY		AGS CONTROLS WIRING DIAGRAM
DECIMAL TOLERANCES .X ±.030 .XX ±.015 .XXX ±.005 ANGULAR TOLERANCE ± .5°	DESIGN APPROVAL		BLDG 911B
	ENGINEER APPROVAL		AGS EVENT LINK INPUTS
	SUPVR. APPROVAL		SIZE D / REV. A
NA FINISH / BREAK SHARP EDGES MAX. XX MIN. XX	NEXT ASSEMBLY		DRAWING NUMBER
OUTSTANDING ECN			MATERIAL: ——— / SCALE: NA / WEIGHT: – / SHEET 20

1 *AUTOCAD

REV.	ZONE	ECN NO.	DATE	BY	CKR	APP.

EVENT INPUT MODULE (C)

BLDG #: 911B
RACK #: 5466
CHASSIS ID: CST.911B.AGS_EVLNK
SLOT #: 18
A16 BASE ADDRESS: NA

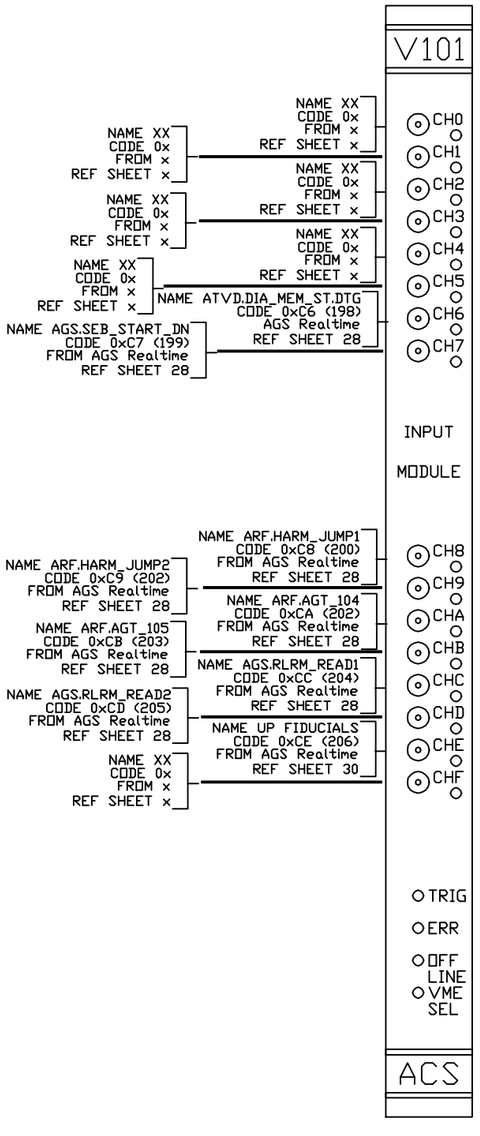

EVENT INPUT MODULE (D)

BLDG #: 911B
RACK #: 5466
CHASSIS ID: CST.911B.AGS_EVLNK
SLOT #: 19
A16 BASE ADDRESS: NA

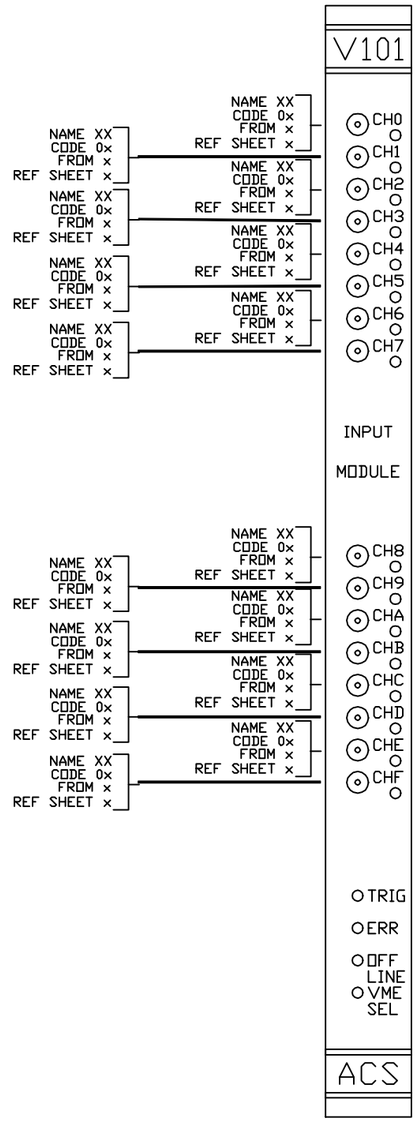

EVENT INPUT MODULE (E)

BLDG #: 911B
RACK #: 5466
CHASSIS ID: CST.911B.AGS_EVLNK
SLOT #: 20
A16 BASE ADDRESS: NA

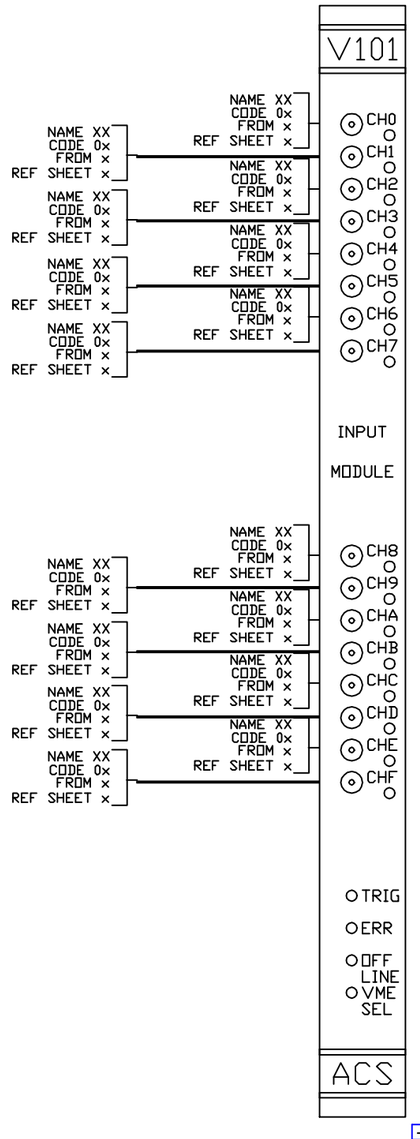

EVENT INPUT MODULE (F)

BLDG #: 911B
RACK #: 5466
CHASSIS ID: CST.911B.AGS_EVLNK
SLOT #: 21
A16 BASE ADDRESS: NA

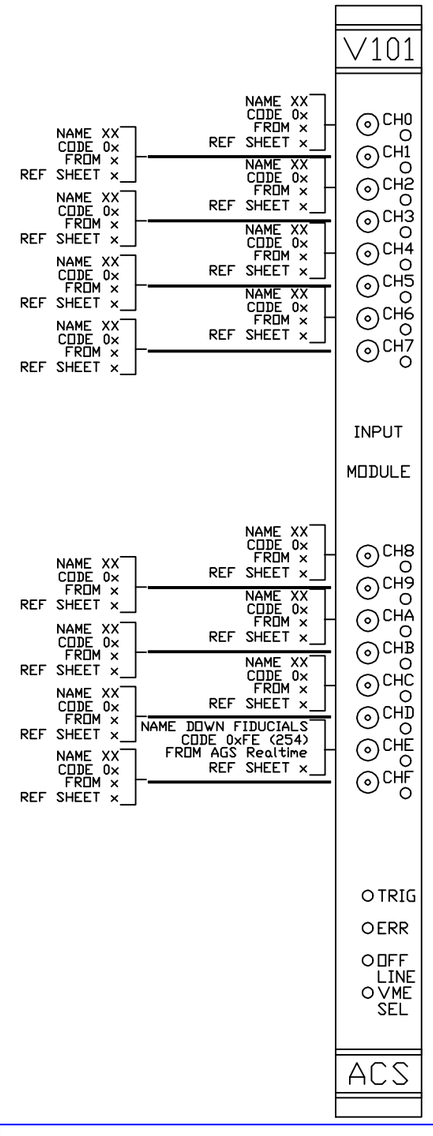

-3	-2	-1	QTY REQD	REF DESIGNATOR	ITEM NO.	DESCRIPTION	MAT'L DWG NO./BNL NO.

INTERPRET IN GENERAL ACCORDANCE WITH ASME Y14.24M-1989
UNLESS OTHERWISE SPECIFIED DIMENSIONS ARE IN INCHES
DECIMAL TOLERANCES .X ±.030 .XX ±.015 .XXX ±.005
ANGULAR TOLERANCE ± .5'
OUTSTANDING ECN
NA FINISH
BREAK SHARP EDGES MAX. XX MIN. XX

Q.A. CATEGORY A-3 | DATE
DRAWN BY J Pepe 2/23/2000
CHECKED BY
DESIGN APPROVAL
ENGINEER APPROVAL
SUPVR. APPROVAL
NEXT ASSEMBLY

BROOKHAVEN NATIONAL LABORATORY
UPTON, N.Y. 11973
AGS CONTROLS WIRING DIAGRAM
BLDG 911B
AGS EVENT LINK INPUTS

SIZE D | DRAWING NUMBER | REV. A
MATERIAL: ——— | SCALE: NA | WEIGHT: – | SHEET 21

ACS, BNL 3/27/00 12:52 PM v101_4evlnk.dwg

*AUTOCAD

Schoenfeld, Controls 10/18/2004 11:22 AM v108_fec_RTDL1.dwg

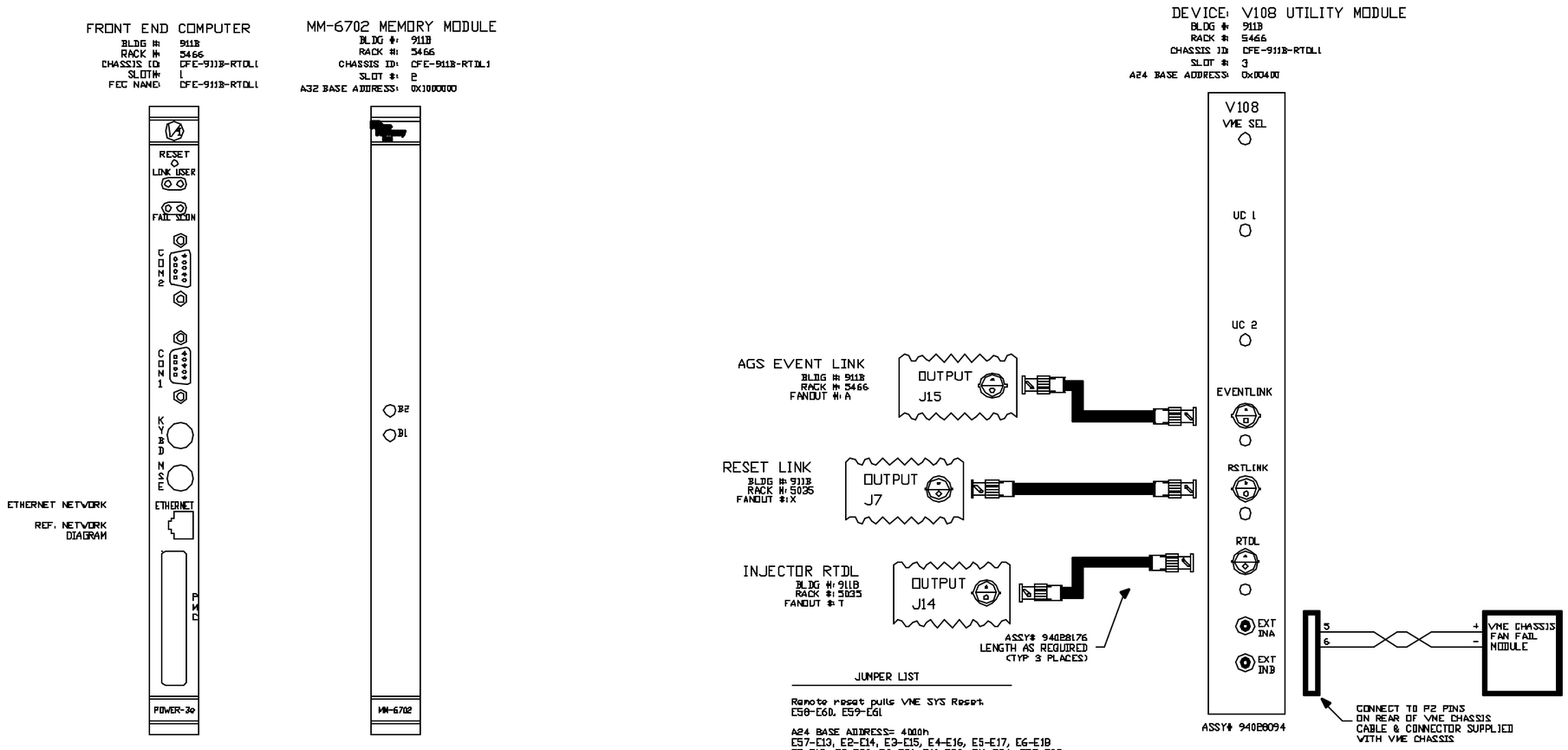

JUMPER LIST

1. REMOVE E1.
2. INSTALL E15.
3. SW3 CLOSE ALL POSITIONS. LOWER LIMIT=XX000000
4. SW2 CLOSE POSITIONS 7 AND 8. UPPER LIMIT=XX3FFFFE
5. SW1 OPEN POSITION 1. BASE=1000000
6. INSTALL E14 AND E25 TO ENABLE BATTERIES
7. SW4 ALL OPEN.
8. SW5 ALL OPEN.
9. SW6 ALL OPEN.

JUMPER LIST

Remote reset pulls VME SYS Reset.
E58-E60, E59-E61

A24 BASE ADDRESS= 4000h
E57-E13, E2-E14, E3-E15, E4-E16, E5-E17, E6-E18
E7-E19, E8-E20, E9-E21, E10-E22, E11-E24, E57-E23
SW1=OPEN
SW2=CLOSED
SW3=OPEN
SW4=OPEN

RESET CODE= FC3C
1 RC1D7 hardwired TO +5V
1 RC1D6 E37 jumper to +5V using E25-E30
1 RC1D5 E38 jumper to +5V using E25-E30
1 RC1D4 E39 jumper to +5V using E25-E30

1 RC1D3 E40 jumper to +5V using E25-E30
1 RC1D2 E41 jumper to +5V using E25-E30
0 RC1D1 E42 jumper to GND using E31-E36
0 RC1D0 E43 jumper to GND using E31-E36

0 RC2D7 hardwired to GND
0 RC2D6 E44 jumper to GND using E31-E36
1 RC2D5 E45 jumper to +5V using E25-30
1 RC2D4 E46 jumper to +5V using E25-30

1 RC2D3 E47 jumper to +5V using E25-E30
1 RC2D2 E48 jumper to +5V using E25-E30
0 RC2D1 E49 jumper to GND using E31-E36
0 RC2D0 E50 jumper to GND using E31-E36

REV.	ZONE	ECN NO.	DATE	BY	CKR	APP.

-3 -2 -1 QTY REQD	REF DESIGNATOR	ITEM NO.	DESCRIPTION	MAT'L DWG NO./INL NO.

INTERPRET IN GENERAL ACCORDANCE WITH ASME Y14.24M-1989
UNLESS OTHERWISE SPECIFIED DIMENSIONS ARE IN INCHES
DECIMAL TOLERANCES .X ±.030 .XX ±.015 .XXX ±.005
ANGULAR TOLERANCE ± .5°
NA FINISH
BREAK SHARP EDGES MAX. XX MIN. XX
OUTSTANDING ECN

Q.A. CATEGORY A-3
DRAWN BY Venegas DATE 5/8/2003
CHECKED BY
DESIGN APPROVAL
ENGINEER APPROVAL
SUPVR. APPROVAL
NEXT ASSEMBLY

BROOKHAVEN NATIONAL LABORATORY
UPTON, N.Y. 11973
AGS CONTROLS WIRING DIAGRAM
911B, VME CFE-911B-RTLD1
FT END COMP/V108 UTIL MODULE
SIZE D
V108_FEC_RTDL1
REV. A
DRAWING NUMBER
MATERIAL: ——— SCALE: NA WEIGHT: - SHEET 22

*AUTOCAD

REV.	ZONE	ECN NO.	DATE	BY	CKR	APP.

V104 DECODER MODULE
BLDG #: 911B
RACK #: 5466
CHASSIS ID: CFE-911B-RTDL1
SLOT #: 4
A16 BASE ADDRESS: 0XFFFFE400

T102
BLDG #: 911B
RACK #: 5466
CHASSIS ID: CFE-911B-RTDL1
SLOT #: 4 REAR
BASE ADDRESS: XXXXX

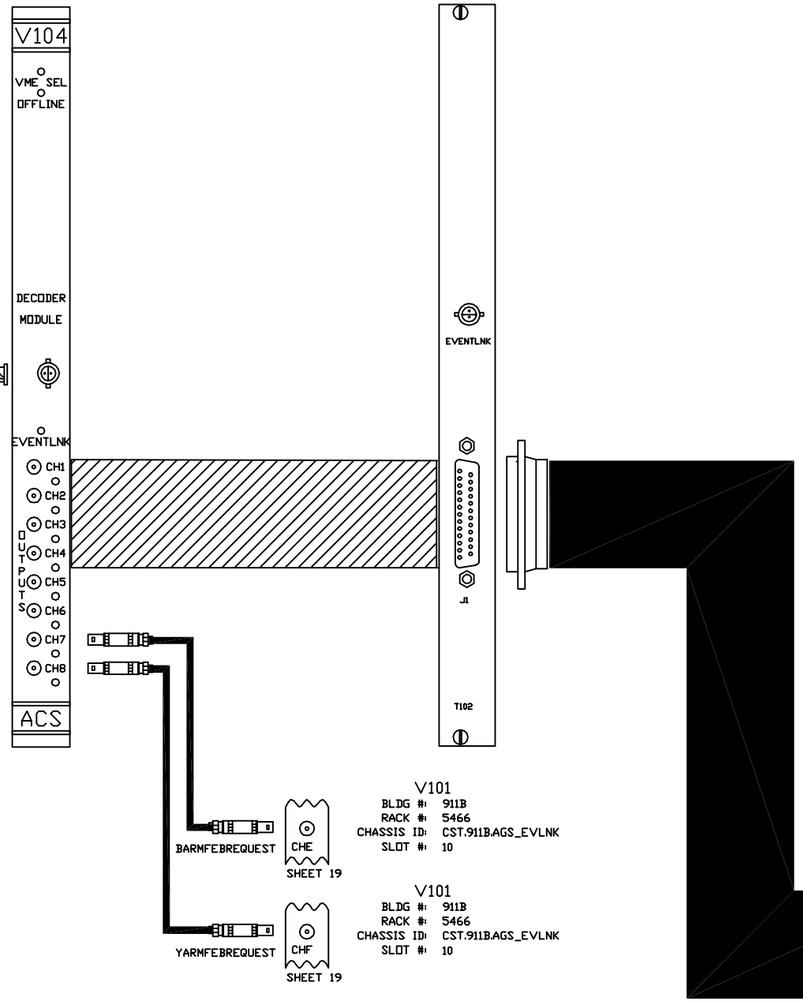

RHIC EVENT LINK
BLDG #: 911B
RACK #: 5322
FANOUT #: A

OUTPUT
J15

ASSY# 94028176
LENGTH AS REQUIRED

V104 DECODER MODULE JUMPER LIST

A16 BASE ADDRESS 0XFFFFE400	
JP1=OUT JP2=OUT JP3=OUT JP4=IN JP5=IN JP6=OUT JP7=IN	
EVENT	INPUT
JP8=OUT JP9=IN JP10=IN	
JP11=IN JP12=OUT JP13=OUT JP14=IN	

BARMFEBREQUEST
CHE
SHEET 19

V101
BLDG #: 911B
RACK #: 5466
CHASSIS ID: CST.911B.AGS_EVLNK
SLOT #: 10

YARMFEBREQUEST
CHF
SHEET 19

V101
BLDG #: 911B
RACK #: 5466
CHASSIS ID: CST.911B.AGS_EVLNK
SLOT #: 10

TTL TO AGS CONVERTER TIMER OUTPUT MOD
LOCATION: 911B
RACK: 5466
POSITION: AM

J1	1 MHZ
J2	100 KHZ
J3	10 KHZ
J4	1 KHZ
J5	GFEBBUNCH YFEBBUNCH BFEBBUNCH
J6	EV-AGS FLAT END
J7	YFEBREQUEST BFEBREQUEST GFEBREQUEST
J8	EV-AGS FLAT START
J9	AGS T0
J10	XXX
J11	OUTPUT OFF OF FRONT PANEL
J12	

-3	-2	-1	REF DESIGNATOR	ITEM NO.	DESCRIPTION	MAT'L DWG NO./PNL NO.
QTY REQD						

INTERPRET IN GENERAL ACCORDANCE WITH ASME Y14.24M-1989
UNLESS OTHERWISE SPECIFIED DIMENSIONS ARE IN INCHES
DECIMAL TOLERANCES
.X ±.030
.XX ±.015
.XXX ±.005
ANGULAR TOLERANCE ± .5°
NA FINISH
BREAK SHARP EDGES
MAX. XX MIN. XX
OUTSTANDING ECN

Q.A. CATEGORY A-3
DRAWN BY J Pepe 3/3/2000
CHECKED BY
DESIGN APPROVAL
ENGINEER APPROVAL
SUPVR. APPROVAL
NEXT ASSEMBLY

BROOKHAVEN NATIONAL LABORATORY
ASSOCIATED UNIVERSITIES, INC.
UPTON, N.Y. 11973

AGS CONTROLS WIRING DIAGRAM
BLDG 911B
V104 DECODER MODULE

SIZE D
DRAWING NUMBER
REV. A
MATERIAL: ——— SCALE: NA WEIGHT: — SHEET 23

Bill Venegas, BNL 5/9/2003 2:12 PM v104_gausscIk.dwg

1 *AUTOCAD

REV.	ZONE	ECN NO.	DATE	BY	CKR	APP.

V102 DECODER MODULE

BLDG #: 911B
RACK #: 5466
CHASSIS ID: CFE-911B-RTDL1
SLOT #: 5
A16 BASE ADDRESS: 0XFFFFE600

V102
VME SEL
OFFLINE
EXT TRG 1/2
EXT TRG 3/4
INPUTS TRG 5/6
INPUTS TRG 7/8
CLK
DELAY MODULE
EVENTLNK
OUTPUTS CH1 CH2 CH3 CH4 CH5 CH6 CH7 CH8
ACS

RHIC EVENT LINK
BLDG #: 911B
RACK #: 5322
FANOUT #: A

OUTPUT J17

ASSY# 94028176
LENGTH AS REQUIRED

RHIC EVENT 0x4E (78) → EV-SPIN-UP → CH6 SHEET 18
RHIC EVENT 0x4F (79) → EV-SPIN-DN → CH7 SHEET 18
RHIC EVENT 0x48 (72) → EV-720Hz → CH8 SHEET 19
RHIC EVENT 0x4A (74) → EV-1Hz → CHC SHEET 19
RHIC EVENT 0xC0 (192) → EV-4SEC → CHD SHEET 19
RHIC EVENT 0x38 (56) → EV-SPIN-0 → CH8 SHEET 18

V101
BLDG #: 911B
RACK #: 5466
CHASSIS ID: CST.911B.AGS_EVLNK
SLOT #: 9

V101
BLDG #: 911B
RACK #: 5466
CHASSIS ID: CST.911B.AGS_EVLNK
SLOT #: 9

V101
BLDG #: 911B
RACK #: 5466
CHASSIS ID: CST.911B.AGS_EVLNK
SLOT #: 10

V101
BLDG #: 911B
RACK #: 5466
CHASSIS ID: CST.911B.AGS_EVLNK
SLOT #: 10

V101
BLDG #: 911B
RACK #: 5466
CHASSIS ID: CST.911B.AGS_EVLNK
SLOT #: 10

V101
BLDG #: 911B
RACK #: 5466
CHASSIS ID: CST.911B.AGS_EVLNK
SLOT #: 9

V102 DECODER MODULE JUMPER LIST

A16 BASE ADDRESS 0XFFFFE600 JP1=OUT JP2=OUT JP3=OUT JP4=IN JP5=OUT JP6=OUT JP7=IN
EVENT INPUT JP8=OUT JP9=IN JP10=IN
JP11=IN JP12=OUT JP13=OUT JP14=IN

Bill Venegas, BNL 5/9/2003 2:20 PM v102_gaussclk.dwg

-3	-2	-1 QTY REQD	REF DESIGNATOR	ITEM NO.	DESCRIPTION	MAT'L DWG NO./BNL NO.

INTERPRET IN GENERAL ACCORDANCE WITH ASME Y14.24M-1989
UNLESS OTHERWISE SPECIFIED DIMENSIONS ARE IN INCHES
DECIMAL TOLERANCES .X ±.030 .XX ±.015 .XXX ±.005
ANGULAR TOLERANCE ± .5°
OUTSTANDING ECN
NA FINISH
BREAK SHARP EDGES MAX. XX MIN. XX

Q.A. CATEGORY A-3 DATE
DRAWN BY Ed Koropsak 8/9/2000
CHECKED BY
DESIGN APPROVAL
ENGINEER APPROVAL
SUPVR. APPROVAL
NEXT ASSEMBLY

BROOKHAVEN NATIONAL LABORATORY
UPTON, N.Y. 11973
AGS CONTROLS WIRING DIAGRAM
BLDG 911B
V102 DECODER MODULE

SIZE D | DRAWING NUMBER | REV. A
MATERIAL: ——— SCALE: NA WEIGHT: – SHEET 23A

*AUTOCAD

REV.	ZONE	ECN NO.	DATE	BY	CKR	APP.

CONTROLS- 2/6/02 2:08 PM Rhicrtdl.dwg

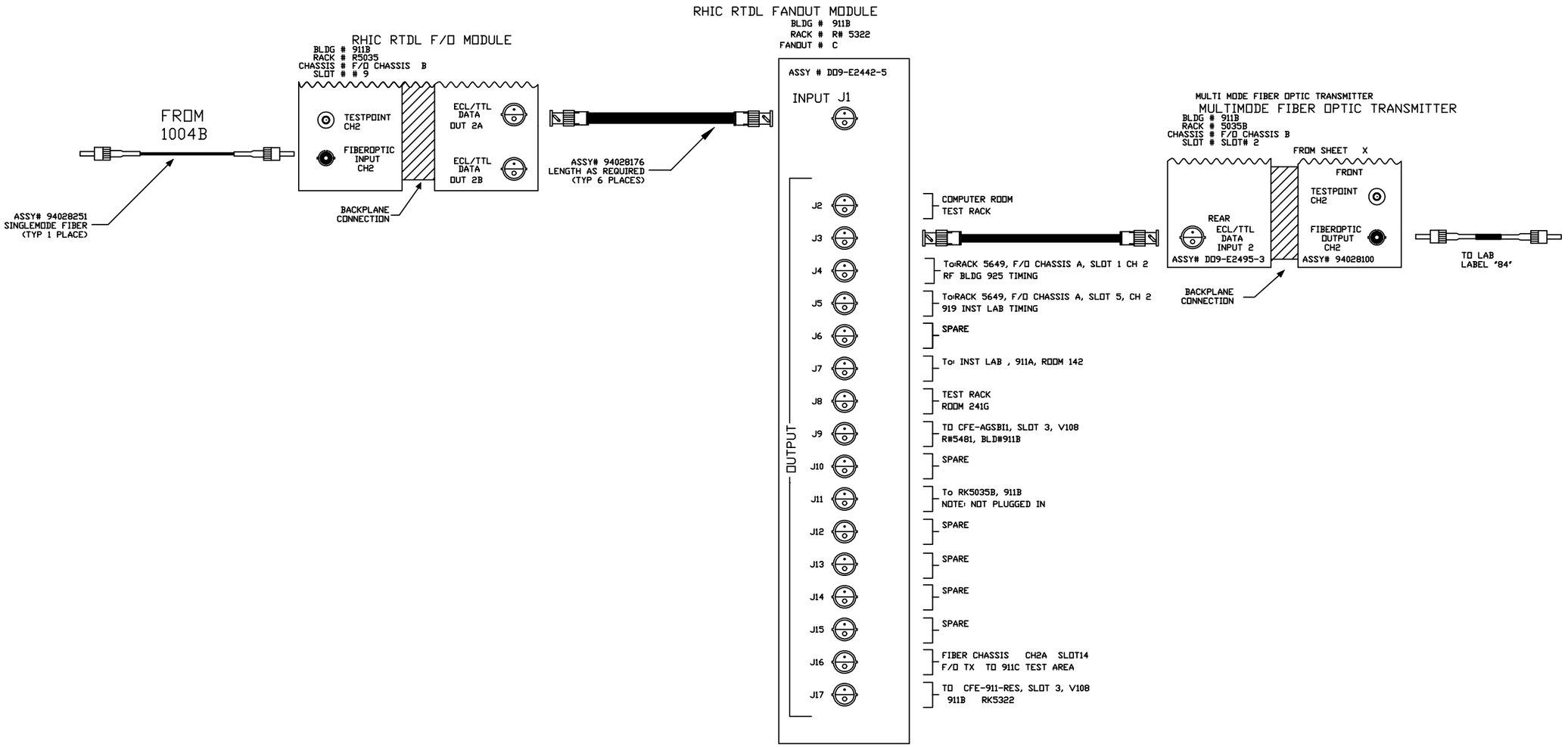

-3	-2	-1	REF DESIGNATOR	ITEM NO.	DESCRIPTION	MAT'L DWG NO./DWG NO.
QTY REQD						

INTERPRET IN GENERAL ACCORDANCE WITH ASME Y14.24M-1989	Q.A. CATEGORY A-3	DATE	BROOKHAVEN NATIONAL LABORATORY
UNLESS OTHERWISE SPECIFIED DIMENSIONS ARE IN INCHES	DRAWN BY STEVE LENSKI	07-31-01	UPTON, N.Y. 11973
DECIMAL TOLERANCES X ±.030 .XX ±.015 .XXX ±.005 ANGULAR TOLERANCE ± .5°	CHECKED BY		RHIC CONTROLS WIRING DIAGRAM
	DESIGN APPROVAL		R#5322 FANOUT C
	ENGINEER APPROVAL R. MICHNOFF	11/4/97	RTDL
NA FINISH BREAK SHARP EDGES MAX. XX MIN. XX	SUPVR. APPROVAL		SIZE D — DRAWING NUMBER — REV. A
OUTSTANDING ECN	NEXT ASSEMBLY		MATERIAL: —— SCALE: NA WEIGHT: — SHEET 4 OF 52

*AUTOCAD

REV.	ZONE	ECN NO.	DATE	BY	CKR	APP.

Bill Venegas, BNL 5/9/2003 2:51 PM 5322FOA.dwg

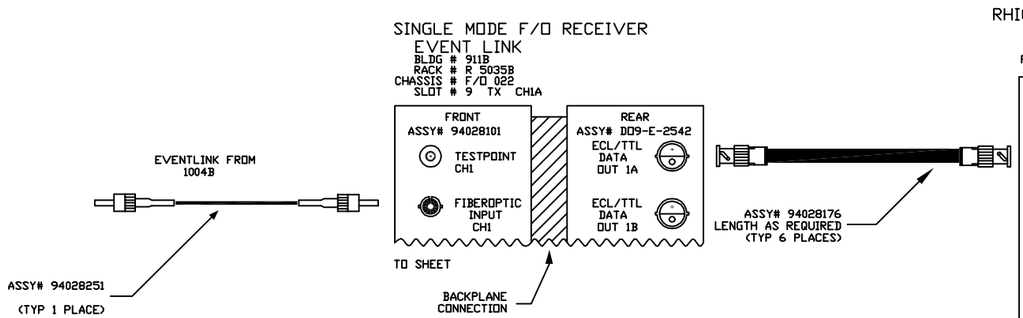

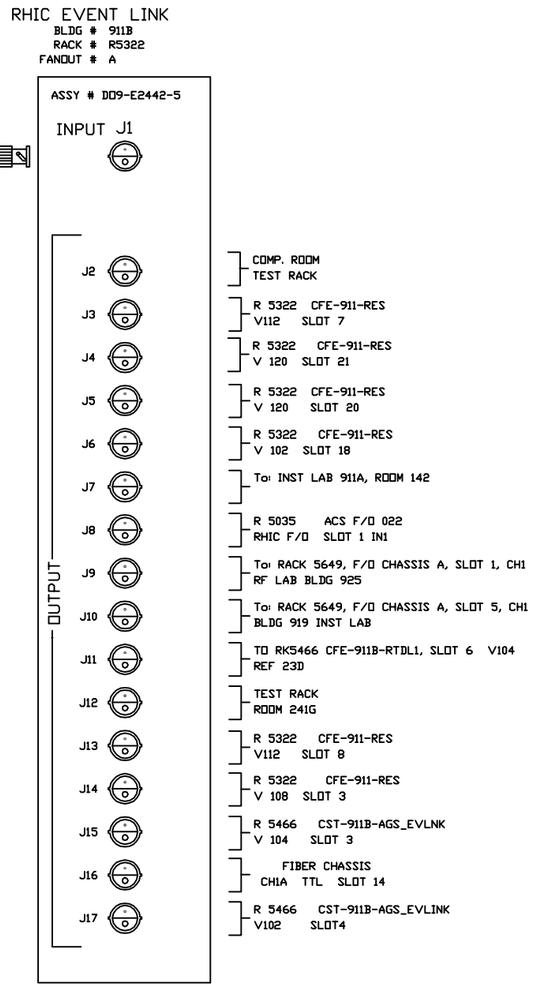

COMP. ROOM
TEST RACK

R 5322 CFE-911-RES
V112 SLOT 7

R 5322 CFE-911-RES
V 120 SLOT 21

R 5322 CFE-911-RES
V 120 SLOT 20

R 5322 CFE-911-RES
V 102 SLOT 18

To: INST LAB 911A, ROOM 142

R 5035 ACS F/O 022
RHIC F/O SLOT 1 IN1

To: RACK 5649, F/O CHASSIS A, SLOT 1, CH1
RF LAB BLDG 925

To: RACK 5649, F/O CHASSIS A, SLOT 5, CH1
BLDG 919 INST LAB

TO RK5466 CFE-911B-RTDL1, SLOT 6 V104
REF 23D

TEST RACK
ROOM 241G

R 5322 CFE-911-RES
V112 SLOT 8

R 5322 CFE-911-RES
V 108 SLOT 3

R 5466 CST-911B-AGS_EVLNK
V 104 SLOT 3

FIBER CHASSIS
CH1A TTL SLOT 14

R 5466 CST-911B-AGS_EVLINK
V102 SLOT4

-3 QTY REQD	-2	-1	REF DESIGNATOR	ITEM NO.	DESCRIPTION	MAT'L DWG NO./ENG. NO.

INTERPRET IN GENERAL ACCORDANCE WITH ASME Y14.24M-1989

UNLESS OTHERWISE SPECIFIED DIMENSIONS ARE IN INCHES

DECIMAL TOLERANCES
.X ±.030
.XX ±.015
.XXX ±.005
ANGULAR TOLERANCE ± .5'

NA FINISH

BREAK SHARP EDGES MAX. XX MIN. XX

OUTSTANDING ECN

NEXT ASSEMBLY

Q.A. CATEGORY	A-3	DATE
DRAWN BY	Steve Lenski	08/08/2001
CHECKED BY		
DESIGN APPROVAL		
ENGINEER APPROVAL	R. MICHNOFF	11/4/97
SUPVR. APPROVAL		

BROOKHAVEN NATIONAL LABORATORY
UPTON, N.Y. 11973

RHIC CONTROLS WIRING DIAGRAM
R 5322 FANOUT A 911B
RHIC EVENTLINK

SIZE D | DRAWING NUMBER | REV. A

MATERIAL: ——— SCALE: NA WEIGHT: — SHEET 23C

*AUTOCAD

REV.	ZONE	ECN NO.	DATE	BY	CKR	APP.

Schoenfeld, Controls 10/18/2004 11:25 AM v104_rhic_events2.dwg

V104 DECODER MODULE

BLDG #: 911B
RACK #: 5466
CHASSIS ID: CFE-911B-RTDL1
SLOT #: 6
A16 BASE ADDRESS: 0XFFFFE200

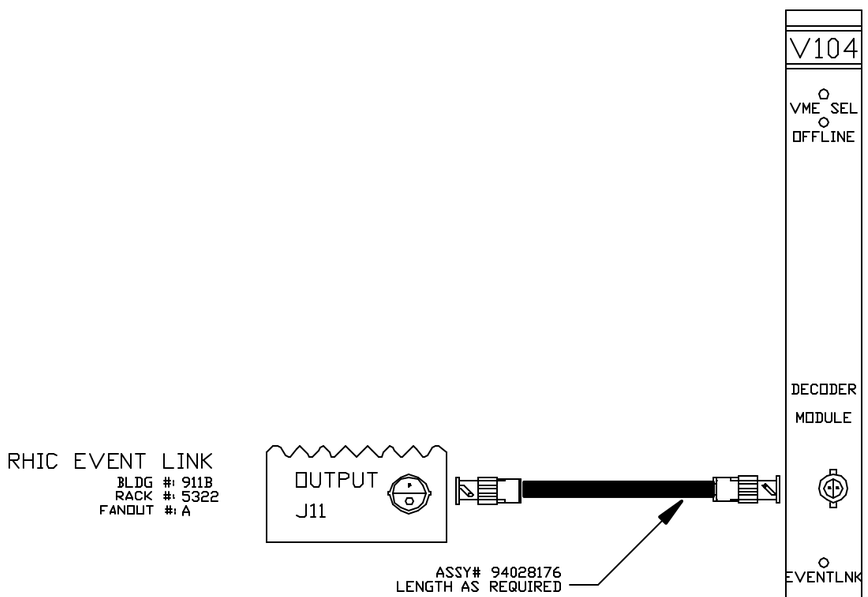

RHIC EVENT LINK
BLDG #: 911B
RACK #: 5322
FANOUT #: A

OUTPUT
J11

ASSY# 94028176
LENGTH AS REQUIRED

- CH1 — TO: EV-BRESET-SYNCHRO, CST.911B.AGS_EVLNK, V101 SLOT 10 CH3 REF: 19
- CH2 — TO: EV-YRESET-SYNCHRO, CST.911B.AGS_EVLNK, V101 SLOT 10 CH4 REF: 19
- CH3 — TO: EV-BPILOTBUNCH, CST.911B.AGS_EVLNK, V101 SLOT 12 CH2 REF: 19
- CH4 — TO: EV-YPILOTBUNCH, CST.911B.AGS_EVLNK, V101 SLOT 12 CH3 REF: 19
- CH5 — TO: RTDL_TIMERSET, CST.911B-BSTR-EVLNK, V101, SLOT 17, CH0 REF: 11
- CH6 — TO REF
- CH7 — TO REF
- CH8 — TO REF

V104 DECODER MODULE JUMPER LIST

A16 BASE ADDRESS
0XFFFFE200

JP1=OUT
JP2=OUT
JP3=OUT
JP4=IN
JP5=IN
JP6=IN
JP7=OUT

EVENT INPUT

JP8=OUT
JP9=IN
JP10=IN

JP11=IN
JP12=OUT
JP13=OUT
JP14=IN

INTERPRET IN GENERAL ACCORDANCE WITH ASME Y14.24M-1989	Q.A. CATEGORY A-3	DATE	BROOKHAVEN NATIONAL LABORATORY ASSOCIATED UNIVERSITIES, INC. UPTON, N.Y. 11973	
UNLESS OTHERWISE SPECIFIED DIMENSIONS ARE IN INCHES	DRAWN BY J Pepe	3/3/2000	AGS CONTROLS WIRING DIAGRAM	
DECIMAL TOLERANCES .X ±.030 .XX ±.015 .XXX ±.005 ANGULAR TOLERANCE ± .5°	CHECKED BY		BLDG 911B	
	DESIGN APPROVAL		V104 DECODER MODULE	
	ENGINEER APPROVAL			
	SUPVR. APPROVAL			
OUTSTANDING ECN: NA	BREAK SHARP EDGES MAX. XX MIN. XX	NEXT ASSEMBLY	SIZE D — V104_RHIC_EVENTS2 — REV. A	
			MATERIAL: — SCALE: NA WEIGHT: - SHEET 23D	

*AUTOCAD

REV.	ZONE	ECN NO.	DATE	BY	CKR	APP.

Bill Venegas, BNL 5/13/2003 2:06 PM V202_rtdl1.dwg

V202 EVENT DELAY MODULE

BLDG #: 911B
RACK #: 5644
CHASSIS ID: CFE-911B-RTDL1
SLOT #: 07
A24 BASE ADDRESS: 30000

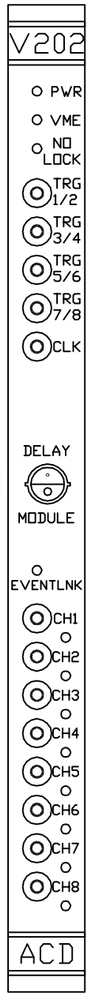

CH1 TO TERMINAL STRIP BOTTOM OF RK5466 J1
CH2 TO TERMINAL STRIP BOTTOM OF RK5466 J2
CH3 TO TERMINAL STRIP BOTTOM OF RK5466 J3
CH4 TO TERMINAL STRIP BOTTOM OF RK5466 J4
CH5 TO TERMINAL STRIP BOTTOM OF RK5466 J5
CH6 TO TERMINAL STRIP BOTTOM OF RK5466 J6
CH7 TO TERMINAL STRIP BOTTOM OF RK5466 J7
CH8 TO TERMINAL STRIP BOTTOM OF RK5466 J8

TO SCOPE TRIGGERS IN MCR3

AGS EVENT LINK
BLDG #: 911B
RACK #: 5466
FANOUT #: A

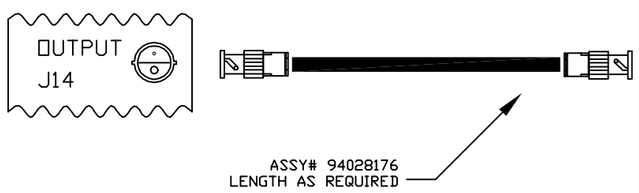

V202 EVENT DELAY MODULE JUMPER LIST

A24 BASE ADDRESS	0X030000
SW1	
A16	1
A17	1
A18	0
A19	0
A20	0
A21	0
A22	0
A23	0
JP1	IN
JP2	PIN 1 TO 2
JP3	IN
JP4	OUT
JP5	OUT
JP6	OUT
JP7	OUT
JP8	OUT
JP9	OUT
JP10	IN
JP11,12,13	IN

-3	-2	-1	REF DESIGNATOR	ITEM NO.	DESCRIPTION	MAT'L SPEC NO./DWG. NO.
QTY REQD						

INTERPRET IN GENERAL ACCORDANCE WITH ASME Y14.24M-1989
UNLESS OTHERWISE SPECIFIED DIMENSIONS ARE IN INCHES
DECIMAL TOLERANCES .X ±.030 .XX ±.015 .XXX ±.005
ANGULAR TOLERANCE ± .5°
NA FINISH
BREAK SHARP EDGES MAX. XX MIN. XX
OUTSTANDING ECN

Q.A. CATEGORY A-3
DRAWN BY Venegas 03/24/03
CHECKED BY
DESIGN APPROVAL
ENGINEER APPROVAL
SUPVR. APPROVAL
NEXT ASSEMBLY

BROOKHAVEN NATIONAL LABORATORY
UPTON, N.Y. 11973
AGS CONTROLS WIRING DIAGRAM
BLDG. 911B CHASSIS CFE-911B-RTDL1
V202 EVENT DELAY MODULE

SIZE D DRAWING NUMBER REV. A
MATERIAL: —— SCALE: NA WEIGHT: — SHEET 23E

*AUTOCAD

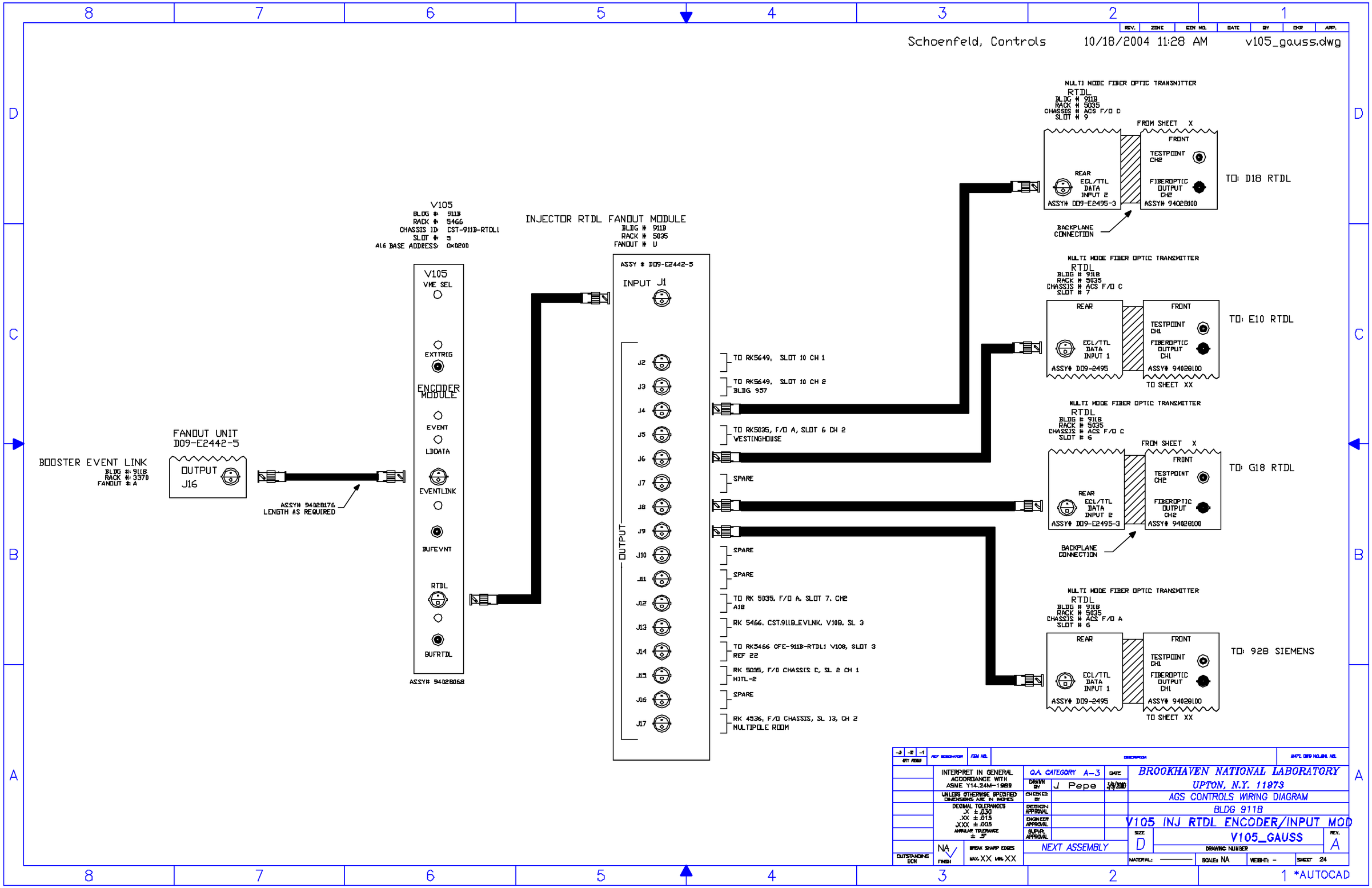

Schoenfeld, Controls 10/18/2004 11:28 AM v105_gauss.dwg
V105
BLDG # 911B
RACK # 5466
CHASSIS ID: CST-911B-RTDL1
SLOT # 5
A16 BASE ADDRESS: 0x0200
V105
VME SEL
EXTTRIG
ENCODER MODULE
EVENT
LDDATA
EVENTLINK
BUFEVNT
RTDL
BUFRTDL
ASSY# 94028068
INJECTOR RTDL FANOUT MODULE
BLDG # 911B
RACK # 5035
FANOUT # U
ASSY # D09-E2442-5
INPUT J1
OUTPUT
J2
J3
J4
J5
J6
J7
J8
J9
J10
J11
J12
J13
J14
J15
J16
J17
TO RK5649, SLOT 10 CH 1
TO RK5649, SLOT 10 CH 2
BLDG 957
TO RK5035, F/O A, SLOT 6 CH 2
WESTINGHOUSE
SPARE
SPARE
SPARE
TO RK 5035, F/O A, SLOT 7, CH2
A18
RK 5466, CST.911B_EVLNK, V10B, SL 3
TO RK5466 CFE-911B-RTDL1 V108, SLOT 3
REF 22
RK 5035, F/O CHASSIS C, SL 2 CH 1
HITL-2
SPARE
RK 4536, F/O CHASSIS, SL 13, CH 2
MULTIPOLE ROOM
FANOUT UNIT
D09-E2442-5
OUTPUT
J16
BOOSTER EVENT LINK
BLDG #: 911B
RACK #: 3370
FANOUT #: A
ASSY# 94028176
LENGTH AS REQUIRED
MULTI MODE FIBER OPTIC TRANSMITTER
RTDL
BLDG # 911B
RACK # 5035
CHASSIS # ACS F/O C
SLOT # 9
FROM SHEET X
REAR
ECL/TTL DATA INPUT 2
ASSY# D09-E2495-3
FRONT
TESTPOINT CH2
FIBEROPTIC OUTPUT CH2
ASSY# 94028100
TO: D18 RTDL
BACKPLANE CONNECTION
MULTI MODE FIBER OPTIC TRANSMITTER
RTDL
BLDG # 911B
RACK # 5035
CHASSIS # ACS F/O C
SLOT # 7
REAR
ECL/TTL DATA INPUT 1
ASSY# D09-2495
FRONT
TESTPOINT CH1
FIBEROPTIC OUTPUT CH1
ASSY# 94028100
TO: E10 RTDL
TO SHEET XX
MULTI MODE FIBER OPTIC TRANSMITTER
RTDL
BLDG # 911B
RACK # 5035
CHASSIS # ACS F/O C
SLOT # 6
FROM SHEET X
REAR
ECL/TTL DATA INPUT 2
ASSY# D09-E2495-3
FRONT
TESTPOINT CH2
FIBEROPTIC OUTPUT CH2
ASSY# 94028100
TO: G18 RTDL
BACKPLANE CONNECTION
MULTI MODE FIBER OPTIC TRANSMITTER
RTDL
BLDG # 911B
RACK # 5035
CHASSIS # ACS F/O A
SLOT # 6
REAR
ECL/TTL DATA INPUT 1
ASSY# D09-2495
FRONT
TESTPOINT CH1
FIBEROPTIC OUTPUT CH1
ASSY# 94028100
TO: 928 SIEMENS
TO SHEET XX
INTERPRET IN GENERAL ACCORDANCE WITH ASME Y14.24M-1989
UNLESS OTHERWISE SPECIFIED DIMENSIONS ARE IN INCHES
DECIMAL TOLERANCES .X ±.030 .XX ±.015 .XXX ±.005
ANGULAR TOLERANCE ± .5°
BREAK SHARP EDGES MAX. XX MIN. XX
NA
FINISH
OUTSTANDING ECN
Q.A. CATEGORY A-3
DATE
DRAWN BY J Pepe 3/9/2000
CHECKED BY
DESIGN APPROVAL
ENGINEER APPROVAL
SUPVR. APPROVAL
NEXT ASSEMBLY
BROOKHAVEN NATIONAL LABORATORY
UPTON, N.Y. 11973
AGS CONTROLS WIRING DIAGRAM
BLDG 911B
V105 INJ RTDL ENCODER/INPUT MOD
SIZE D
V105_GAUSS
REV. A
DRAWING NUMBER
MATERIAL:
SCALE: NA
WEIGHT: -
SHEET 24
1 *AUTOCAD

REV.	ZONE	ECN NO.	DATE	BY	CKR	APP.

INJECTOR RTDL INPUT MODULE

BLDG #: 911B
RACK #: 5466
CHASSIS ID: CFE-911B-RTDL1
SLOT #: 9
A16 BASE ADDRESS: 5000

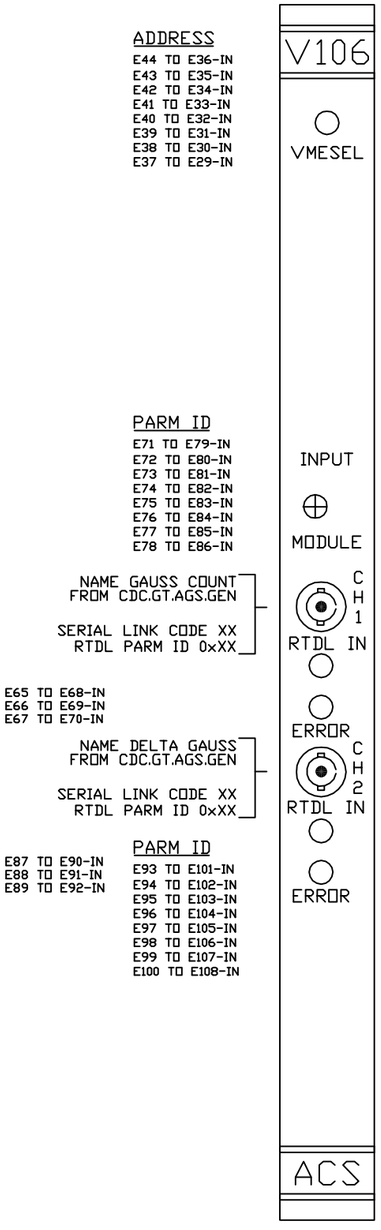

REMOVED 4/5/01
EdK

Bill Venegas, BNL 5/13/2003 2:38 PM v106_gauss.dwg

-3	-2	-1	REF DESIGNATOR	ITEM NO.	DESCRIPTION	MAT'L DWG NO./SPEC NO.
QTY REQD						

INTERPRET IN GENERAL ACCORDANCE WITH ASME Y14.24M-1989	Q.A. CATEGORY A-3	DATE	BROOKHAVEN NATIONAL LABORATORY
	DRAWN BY J Pepe	3/10/2000	UPTON, N.Y. 11973
UNLESS OTHERWISE SPECIFIED DIMENSIONS ARE IN INCHES	CHECKED BY		AGS CONTROLS WIRING DIAGRAM
DECIMAL TOLERANCES .X ±.030 .XX ±.015 .XXX ±.005 ANGULAR TOLERANCE ± .5°	DESIGN APPROVAL		BLDG 911B
	ENGINEER APPROVAL		V106 RTDL INPUT MODULE
	SUPVR. APPROVAL		SIZE D / DRAWING NUMBER / REV. A
OUTSTANDING ECN	NA FINISH	BREAK SHARP EDGES MAX. XX MIN. XX	NEXT ASSEMBLY
			MATERIAL: —— SCALE: NA WEIGHT: — SHEET 25

*AUTOCAD

REV.	ZONE	ECN NO.	DATE	BY	CKR	APP.

Bill Venegas, BNL 5/15/2003 7:22 AM v107_gauss.dwg

V107 TIME STAMP MODULE

BLDG #: 911B
RACK #: 5466
CHASSIS ID: CFE-911B-RTDL1
SLOT #: 10
A16 BASE ADDRESS: 3500

V107 JUMPERS
JP1 = OUT JP2 = IN
JP3 = IN JP4 = IN JP5 = OUT JP6 = OUT JP7 = IN JP8 = OUT JP9 = IN JP10 = OUT JP11 = IN
P3 = ALL OUT

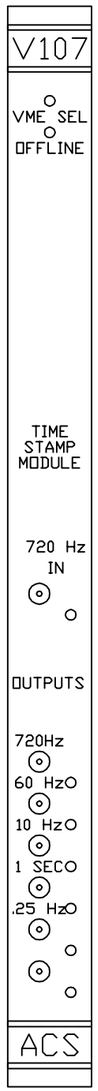

TO: AGS-RT-TIME, V194 SLOT 9 OUT 2C, 720HZ

-3	-2	-1	QTY REQD	REF DESIGNATOR	ITEM NO.	DESCRIPTION	MAT'L DWG NO./BNL NO.

INTERPRET IN GENERAL ACCORDANCE WITH ASME Y14.24M-1989
UNLESS OTHERWISE SPECIFIED DIMENSIONS ARE IN INCHES
DECIMAL TOLERANCES .X ±.030 .XX ±.015 .XXX ±.005
ANGULAR TOLERANCE ± .5'
OUTSTANDING ECN
NA FINISH
BREAK SHARP EDGES MAX. XX MIN. XX

Q.A. CATEGORY A-3	DATE	
DRAWN BY Venegas	5/14/03	
CHECKED BY		
DESIGN APPROVAL		
ENGINEER APPROVAL		
SUPVR. APPROVAL		
NEXT ASSEMBLY		

BROOKHAVEN NATIONAL LABORATORY
UPTON, N.Y. 11973
AGS CONTROLS WIRING DIAGRAM
BLDG 911B
INJECTOR V107 TIME STAMP MODULE

SIZE D | DRAWING NUMBER | REV. A
MATERIAL: ——— | SCALE: NA | WEIGHT: – | SHEET 25.1

*AUTOCAD

REV.	ZONE	ECN NO.	DATE	BY	CKR	APP.

V132 GAUSS GENERATOR

BLDG #: 911-B
RACK #: 5466
CHASSIS ID: CFE-911B-RTDL1
SLOT #: 13
A24 BASE ADDRESS: 0x720000

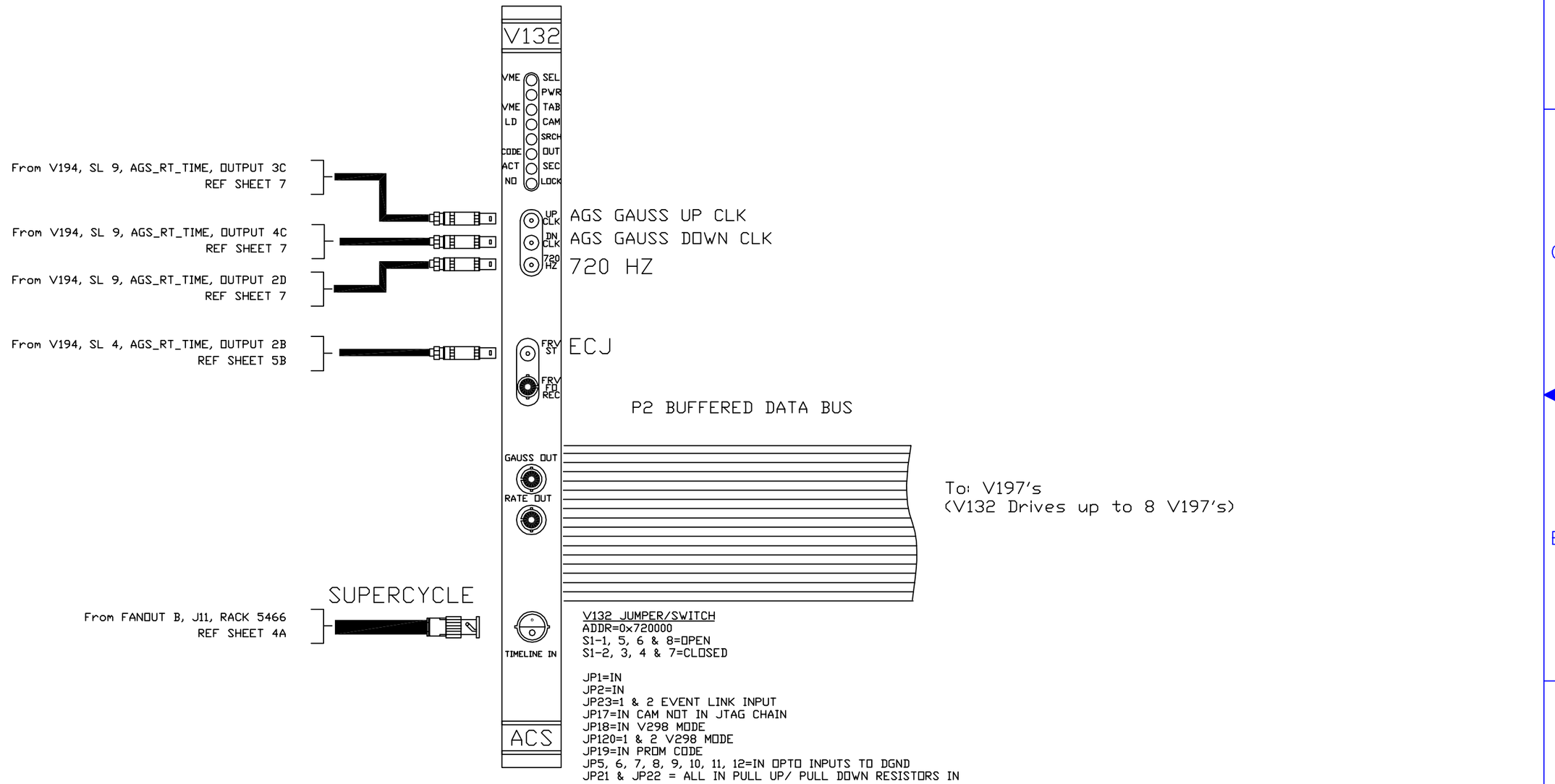

V132 JUMPER/SWITCH
ADDR=0x720000
S1-1, 5, 6 & 8=OPEN
S1-2, 3, 4 & 7=CLOSED

JP1=IN
JP2=IN
JP23=1 & 2 EVENT LINK INPUT
JP17=IN CAM NOT IN JTAG CHAIN
JP18=IN V298 MODE
JP120=1 & 2 V298 MODE
JP19=IN PROM CODE
JP5, 6, 7, 8, 9, 10, 11, 12=IN OPTO INPUTS TO DGND
JP21 & JP22 = ALL IN PULL UP/ PULL DOWN RESISTORS IN

Controls, bnl 9/7/2004 11:22 AM v132_gauss.dwg

-3 QTY REQD	-2	-1	REF DESIGNATOR	ITEM NO.	DESCRIPTION	MAT'L DWG NO./BML NO.

INTERPRET IN GENERAL ACCORDANCE WITH ASME Y14.24M-1989	Q.A. CATEGORY A-3	DATE	BROOKHAVEN NATIONAL LABORATORY
UNLESS OTHERWISE SPECIFIED DIMENSIONS ARE IN INCHES	DRAWN BY Ed Koropsak	9/3/04	UPTON, N.Y. 11973
DECIMAL TOLERANCES .X ±.030 .XX ±.015 .XXX ±.005 ANGULAR TOLERANCE ± .5'	CHECKED BY		AGS CONTROLS WIRING DIAGRAM
	DESIGN APPROVAL		BLDG 911B
	ENGINEER APPROVAL		V132 GAUSS GENERATOR
	SUPVR. APPROVAL		SIZE D / REV. A
OUTSTANDING ECN	NA FINISH / BREAK SHARP EDGES MAX. XX MIN. XX	NEXT ASSEMBLY	DRAWING NUMBER / MATERIAL: ——— / SCALE: NA / WEIGHT: – / SHEET 26

*AUTOCAD

REV.	ZONE	ECN NO.	DATE	BY	CKR	APP.

AGS_GAUSS_CLOCK

BLDG #: 911B
RACK #: 5466
CHASSIS ID: CFE-911B-RTDL1
SLOT #: 14
A16 BASE ADDRESS: NA

V197
CH0
CH1
CH2
CH3
CH4
CH5
CH6
CH7

V101 EVENT INPUT MOD
BLDG #: 911B
RACK #: 5466
CHASSIS ID: CTS.911B.AGS_EVLNK
SLOT#: 14
CH 0 — AIJ.PEAKER

V101 EVENT INPUT MOD
BLDG #: 911B
RACK #: 5466
CHASSIS ID: CST.911B.AGS_EVLNK
SLOT#: 14
CH 1 — ARF.SCOPE_TRG5

V101 EVENT INPUT MOD
BLDG #: 911B
RACK #: 5466
CHASSIS ID: CST.911B.AGS_EVLNK
SLOT#: 14
CH 2 — AGN.B_TRANS_CBM.SP

V101 EVENT INPUT MOD
BLDG #: 911B
RACK #: 5466
CHASSIS ID: CST.911B.AGS_EVLNK
SLOT#: 14
CH 3 — AGN.A_TRANS_CBM.SP

V101 EVENT INPUT MOD
BLDG #: 911B
RACK #: 5466
CHASSIS ID: CST.911B.AGS_EVLNK
SLOT#: 14
CH 4 — AGN.SPARE_2.SP

V101 EVENT INPUT MOD
BLDG #: 911B
RACK #: 5466
CHASSIS ID: CST.911B.AGS_EVLNK
SLOT#: 14
CH 5 — AGT.37_25

V101 EVENT INPUT MOD
BLDG #: 911B
RACK #: 5466
CHASSIS ID: CST.911B.AGS_EVLNK
SLOT#: 16
CH 6 — AGT.39_27

V101 EVENT INPUT MOD
BLDG #: 911B
RACK #: 5466
CHASSIS ID: CST.911B.AGS_EVLNK
SLOT#: 14
CH 7 — ARF.EARLY_OFF1.GT

CH8
CH9
CHA
CHB
CHC
CHD
CHE
CHF
ACS

V101 EVENT INPUT MOD
BLDG #: 911B
RACK #: 5466
CHASSIS ID: CST.911B.AGS_EVLNK
SLOT#: 14
CH 8 — ARF.EARLY_OFF2.GT

V101 EVENT INPUT MOD
BLDG #: 911B
RACK #: 5466
CHASSIS ID: CST.911B.AGS_EVLNK
SLOT#: 14
CH 9 — AGS.GAM_TR_START.GT

V101 EVENT INPUT MOD
BLDG #: 911B
RACK #: 5466
CHASSIS ID: CST.911B.AGS_EVLNK
SLOT#: 14
CH A — AGS.GAM_TR_STOP.GT

V101 EVENT INPUT MOD
BLDG #: 911B
RACK #: 5466
CHASSIS ID: CST.911B.AGS_EVLNK
SLOT#: 14
CH B — ARF.SYNC_START.GT

V101 EVENT INPUT MOD
BLDG #: 911B
RACK #: 5466
CHASSIS ID: CST.911B.AGS_EVLNK
SLOT#: 14
CH C — ARF.EXTRACTION

V101 EVENT INPUT MOD
BLDG #: 911B
RACK #: 5466
CHASSIS ID: CST.911B.AGS_EVLNK
SLOT#: 14
CH D — ATVD.DIA_MEM_ST.UGT

V101 EVENT INPUT MOD
BLDG #: 911B
RACK #: 5466
CHASSIS ID: CST.911B.AGS_EVLNK
SLOT#: 14
CH E — AGT.UPPERLIMIT

V101 EVENT INPUT MOD
BLDG #: 911B
RACK #: 5466
CHASSIS ID: CST.911B.AGS_EVLNK
SLOT#: 14
CH F — ARF.SCOPE_TRG1.GT

NOTE: BOARDS ONLY GET VOLTAGE AND GROUND FROM CHASSIS.

Bill Venegas, BNL 5/13/2003 2:48 PM v197_1gauss.dwg

-3	-2	-1	REF DESIGNATOR	ITEM NO.	DESCRIPTION	MAT'L DWG NO./BNL NO.
QTY REQD						

INTERPRET IN GENERAL ACCORDANCE WITH ASME Y14.24M-1989
UNLESS OTHERWISE SPECIFIED DIMENSIONS ARE IN INCHES
DECIMAL TOLERANCES .X ±.030 .XX ±.015 .XXX ±.005
ANGULAR TOLERANCE ± .5°
OUTSTANDING ECN: NA
FINISH
BREAK SHARP EDGES MAX. XX MIN. XX

Q.A. CATEGORY A-3 DATE
DRAWN BY J Pepe 2/29/2000
CHECKED BY
DESIGN APPROVAL
ENGINEER APPROVAL
SUPVR. APPROVAL
NEXT ASSEMBLY

BROOKHAVEN NATIONAL LABORATORY
UPTON, N.Y. 11973
AGS CONTROLS WIRING DIAGRAM
BLDG 911B
AGS GAUSS CLOCK (SLOT 14)

SIZE D | DRAWING NUMBER | REV. A
MATERIAL: —— | SCALE: NA | WEIGHT: — | SHEET 27

1 *AUTOCAD

REV.	ZONE	ECN NO.	DATE	BY	CKR	APP.

AGS_GAUSS_CLOCK

BLDG #: 911B
RACK #: 5466
CHASSIS ID: CFE-911B-RTDL1
SLOT #: 15
A16 BASE ADDRESS: NA

V197

CH0 — V101 EVENT INPUT MOD (BLDG #: 911B, RACK #: 5466, CHASSIS ID: CTS.911B.AGS_EVLNK, SLOT#: 15) — CH 0 — ARF.SCOPE_TRG2.GT

CH1 — V101 EVENT INPUT MOD (BLDG #: 911B, RACK #: 5466, CHASSIS ID: CST.911B.AGS_EVLNK, SLOT#: 15) — CH 1 — ARF.SCOPE_TRG3.GT

CH2 — V101 EVENT INPUT MOD (BLDG #: 911B, RACK #: 5466, CHASSIS ID: CST.911B.AGS_EVLNK, SLOT#: 15) — CH 2 — ARF.SCOPE_TRG4.GT

CH3 — V101 EVENT INPUT MOD (BLDG #: 911B, RACK #: 5466, CHASSIS ID: CST.911B.AGS_EVLNK, SLOT#: 15) — CH 3 — ARF.TRANSITION.GT

CH4 — V101 EVENT INPUT MOD (BLDG #: 911B, RACK #: 5466, CHASSIS ID: CST.911B.AGS_EVLNK, SLOT#: 15) — CH 4 — AGS.DEBUNCH.GT

CH5 — V101 EVENT INPUT MOD (BLDG #: 911B, RACK #: 5466, CHASSIS ID: CST.911B.AGS_EVLNK, SLOT#: 15) — CH 5 — AGS.SEB_START_UP.GT

CH6 — V101 EVENT INPUT MOD (BLDG #: 911B, RACK #: 5466, CHASSIS ID: CST.911B.AGS_EVLNK, SLOT#: 18) — CH 6 — ARF.HARM_JUMP1.GT

CH7 — V101 EVENT INPUT MOD (BLDG #: 911B, RACK #: 5466, CHASSIS ID: CST.911B.AGS_EVLNK, SLOT#: 18) — CH 7 — ARF.HARM_JUMP2.GT

CH8 — V101 EVENT INPUT MOD (BLDG #: 911B, RACK #: 5466, CHASSIS ID: CST.911B.AGS_EVLNK, SLOT#: 18) — CH 8 — ARF.AGT_104

CH9 — V101 EVENT INPUT MOD (BLDG #: 911B, RACK #: 5466, CHASSIS ID: CST.911B.AGS_EVLNK, SLOT#: 18) — CH 9 — AGS.AGT_105

CHA — V101 EVENT INPUT MOD (BLDG #: 911B, RACK #: 5466, CHASSIS ID: CST.911B.AGS_EVLNK, SLOT#: 18) — CH A — AGS.RLRM_READ1.GT

CHB — V101 EVENT INPUT MOD (BLDG #: 911B, RACK #: 5466, CHASSIS ID: CST.911B.AGS_EVLNK, SLOT#: 18) — CH B — AGS.RLRM_READ2.GT

CHC — V101 EVENT INPUT MOD (BLDG #: 911B, RACK #: 5466, CHASSIS ID: CST.911B.AGS_EVLNK, SLOT#: 18) — CH C — ATVD.DIA_MEM_ST.DTG

CHD — V101 EVENT INPUT MOD (BLDG #: 911B, RACK #: 5466, CHASSIS ID: CST.911B.AGS_EVLNK, SLOT#: 18) — CH D — AGS.SEB_START_DN

CHE — V101 EVENT INPUT MOD (BLDG #: 911B, RACK #: 5466, CHASSIS ID: CST.911B.AGS_EVLNK, SLOT#: 14) — CH E — AGN.GNRIC_GAUSS.TM

CHF — V101 EVENT INPUT MOD (BLDG #: 911B, RACK #: 5466, CHASSIS ID: CST.911B.AGS_EVLNK, SLOT#: NA) — CH F

ACS

NOTE: BOARDS ONLY GET VOLTAGE AND GROUND FROM CHASSIS.

Bill Venegas, BNL 5/13/2003 2:51 PM v197_2gauss.dwg

-3	-2	-1	REF DESIGNATOR	ITEM NO.	DESCRIPTION	MAT'L DWG NO./BNL NO.
QTY REQD						

INTERPRET IN GENERAL ACCORDANCE WITH ASME Y14.24M-1989
UNLESS OTHERWISE SPECIFIED DIMENSIONS ARE IN INCHES
DECIMAL TOLERANCES .X ±.030 .XX ±.015 .XXX ±.005
ANGULAR TOLERANCE ± .5°
OUTSTANDING ECN: NA
FINISH
BREAK SHARP EDGES MAX. XX MIN. XX

Q.A. CATEGORY A-3 DATE
DRAWN BY J Pepe 2/29/2000
CHECKED BY
DESIGN APPROVAL
ENGINEER APPROVAL
SUPVR. APPROVAL
NEXT ASSEMBLY

BROOKHAVEN NATIONAL LABORATORY
UPTON, N.Y. 11973
AGS CONTROLS WIRING DIAGRAM
BLDG 911B
AGS GAUSS CLOCK (SLOT 15)

SIZE D | DRAWING NUMBER | REV. A
MATERIAL: —— | SCALE: NA | WEIGHT: — | SHEET 28

1 *AUTOCAD

REV.	ZONE	ECN NO.	DATE	BY	CKR	APP.

AGS_GAUSS_CLOCK

BLDG #: 911B
RACK #: 5466
CHASSIS ID: CFE-911B-RTDL1
SLOT #: 16
A16 BASE ADDRESS: NA

V197
CH0
CH1
CH2
CH3
CH4
CH5
CH6
CH7

V101 EVENT INPUT MOD
BLDG #: 911B
RACK #: 5466
CHASSIS ID: CTS.911B.AGS_EVLNK
SLOT#: 16
CH 0
AGT.44_2C

V101 EVENT INPUT MOD
BLDG #: 911B
RACK #: 5466
CHASSIS ID: CST.911B.AGS_EVLNK
SLOT#: 16
CH 1
AGT.45_2D

V101 EVENT INPUT MOD
BLDG #: 911B
RACK #: 5466
CHASSIS ID: CST.911B.AGS_EVLNK
SLOT#: 16
CH 2
AGT.46_2E

V101 EVENT INPUT MOD
BLDG #: 911B
RACK #: 5466
CHASSIS ID: CST.911B.AGS_EVLNK
SLOT#: 16
CH 3
AGT.47_2F

V101 EVENT INPUT MOD
BLDG #: 911B
RACK #: 5466
CHASSIS ID: CST.911B.AGS_EVLNK
SLOT#: 16
CH 4
AGT.48_30

V101 EVENT INPUT MOD
BLDG #: 911B
RACK #: 5466
CHASSIS ID: CST.911B.AGS_EVLNK
SLOT#: 16
CH 5
AGT.49_31

V101 EVENT INPUT MOD
BLDG #: 911B
RACK #: 5466
CHASSIS ID: CST.911B.AGS_EVLNK
SLOT#: 16
CH 6
AGT.160_A0

V101 EVENT INPUT MOD
BLDG #: 911B
RACK #: 5466
CHASSIS ID: CST.911B.AGS_EVLNK
SLOT#: 16
CH 7
AGT.161_A1

CH8
CH9
CHA
CHB
CHC
CHD
CHE
CHF
ACS

V101 EVENT INPUT MOD
BLDG #: 911B
RACK #: 5466
CHASSIS ID: CST.911B.AGS_EVLNK
SLOT#: 16
CH 8
AGT.162_A2

V101 EVENT INPUT MOD
BLDG #: 911B
RACK #: 5466
CHASSIS ID: CST.911B.AGS_EVLNK
SLOT#: 16
CH 9
AGT.163_A3

V101 EVENT INPUT MOD
BLDG #: 911B
RACK #: 5466
CHASSIS ID: CST.911B.AGS_EVLNK
SLOT#: 16
CH A
ATJ-START
GAMMA-T TEST
AGT.96_60

V101 EVENT INPUT MOD
BLDG #: 911B
RACK #: 5466
CHASSIS ID: CST.911B.AGS_EVLNK
SLOT#: 16
CH B
ATJ-STOP
GAMMA-T TEST
AGT.97_61

V101 EVENT INPUT MOD
BLDG #: 911B
RACK #: 5466
CHASSIS ID: CST.911B.AGS_EVLNK
SLOT#: 16
CH C
AGT.98_62

V101 EVENT INPUT MOD
BLDG #: 911B
RACK #: 5466
CHASSIS ID: CST.911B.AGS_EVLNK
SLOT#: 16
CH D
AGT.224_E0

V101 EVENT INPUT MOD
BLDG #: 911B
RACK #: 5466
CHASSIS ID: CST.911B.AGS_EVLNK
SLOT#: 16
CH E
AGT.225_E1

V101 EVENT INPUT MOD
BLDG #: 911B
RACK #: 5466
CHASSIS ID: CST.911B.AGS_EVLNK
SLOT#: NA
CH F

NOTE: BOARDS GET ONLY VOLTAGE AND GROUND FROM CHASSIS.

-3	-2	-1	REF DESIGNATOR	ITEM NO.	DESCRIPTION	MAT'L DWG NO./BNL NO.
QTY REQD						

INTERPRET IN GENERAL ACCORDANCE WITH ASME Y14.24M-1989
UNLESS OTHERWISE SPECIFIED DIMENSIONS ARE IN INCHES
DECIMAL TOLERANCES .X ±.030 .XX ±.015 .XXX ±.005
ANGULAR TOLERANCE ± .5°
OUTSTANDING ECN
NA
FINISH
BREAK SHARP EDGES MAX. XX MIN. XX

Q.A. CATEGORY A-3 | DATE
DRAWN BY J Pepe 2/29/2000
CHECKED BY
DESIGN APPROVAL
ENGINEER APPROVAL
SUPVR. APPROVAL
NEXT ASSEMBLY

BROOKHAVEN NATIONAL LABORATORY
UPTON, N.Y. 11973
AGS CONTROLS WIRING DIAGRAM
BLDG 911B
AGS GAUSS CLOCK (SLOT 16)

SIZE D | DRAWING NUMBER | REV. A
MATERIAL: —— | SCALE: NA | WEIGHT: – | SHEET 29

Bill Venegas, BNL 5/13/2003 2:54 PM v197_3gauss.dwg

*AUTOCAD

REV.	ZONE	ECN NO.	DATE	BY	CKR	APP.

AGS_GAUSS_CLOCK

BLDG #: 911B
RACK #: 5466
CHASSIS ID: CFE-911B-RTDL1
SLOT #: 17
A16 BASE ADDRESS: NA

V197
CH0
CH1
CH2
CH3
CH4
CH5
CH6
CH7

V101 EVENT INPUT MOD
BLDG #: 911B
RACK #: 5466
CHASSIS ID: CTS.911B.AGS_EVLNK
SLOT#: 18
CH 0
UP FIDUCIALS

V101 EVENT INPUT MOD
BLDG #: 911B
RACK #: 5466
CHASSIS ID: CST.911B.AGS_EVLNK
SLOT#: 21
CH 1
DOWN FIDUCIALS

V101 EVENT INPUT MOD
BLDG #: 911B
RACK #: 5466
CHASSIS ID: CST.911B.AGS_EVLNK
SLOT#: NA
CH 2

V101 EVENT INPUT MOD
BLDG #: 911B
RACK #: 5466
CHASSIS ID: CST.911B.AGS_EVLNK
SLOT#: NA
CH 3

V101 EVENT INPUT MOD
BLDG #: 911B
RACK #: 5466
CHASSIS ID: CST.911B.AGS_EVLNK
SLOT#: NA
CH 4

V101 EVENT INPUT MOD
BLDG #: 911B
RACK #: 5466
CHASSIS ID: CST.911B.AGS_EVLNK
SLOT#: NA
CH 5

V101 EVENT INPUT MOD
BLDG #: 911B
RACK #: 5466
CHASSIS ID: CST.911B.AGS_EVLNK
SLOT#: NA
CH 6

V101 EVENT INPUT MOD
BLDG #: 911B
RACK #: 5466
CHASSIS ID: CST.911B.AGS_EVLNK
SLOT#: NA
CH 7

ACS
CH8
CH9
CHA
CHB
CHC
CHD
CHE
CHF

V101 EVENT INPUT MOD
BLDG #: 911B
RACK #: 5466
CHASSIS ID: CST.911B.AGS_EVLNK
SLOT#: NA
CH 8

V101 EVENT INPUT MOD
BLDG #: 911B
RACK #: 5466
CHASSIS ID: CST.911B.AGS_EVLNK
SLOT#: NA
CH 9

V101 EVENT INPUT MOD
BLDG #: 911B
RACK #: 5466
CHASSIS ID: CST.911B.AGS_EVLNK
SLOT#: NA
CH A

V101 EVENT INPUT MOD
BLDG #: 911B
RACK #: 5466
CHASSIS ID: CST.911B.AGS_EVLNK
SLOT#: NA
CH B

V101 EVENT INPUT MOD
BLDG #: 911B
RACK #: 5466
CHASSIS ID: CST.911B.AGS_EVLNK
SLOT#: NA
CH C

V101 EVENT INPUT MOD
BLDG #: 911B
RACK #: 5466
CHASSIS ID: CST.911B.AGS_EVLNK
SLOT#: NA
CH D

V101 EVENT INPUT MOD
BLDG #: 911B
RACK #: 5466
CHASSIS ID: CST.911B.AGS_EVLNK
SLOT#: NA
CH E

V101 EVENT INPUT MOD
BLDG #: 911B
RACK #: 5466
CHASSIS ID: CST.911B.AGS_EVLNK
SLOT#: NA
CH F

NOTE: BOARD GETS VOLTAGE AND GROUND FROM CHASSIS.

Bill Venegas, BNL 5/13/2003 2:56 PM v197_4gauss.dwg

-3	-2	-1	REF DESIGNATOR	ITEM NO.	DESCRIPTION	MAT'L DWG NO./BNL NO.
QTY REQD						

INTERPRET IN GENERAL ACCORDANCE WITH ASME Y14.24M-1989
UNLESS OTHERWISE SPECIFIED DIMENSIONS ARE IN INCHES
DECIMAL TOLERANCES .X ±.030 .XX ±.015 .XXX ±.005
ANGULAR TOLERANCE ± .5°
OUTSTANDING ECN: NA
FINISH
BREAK SHARP EDGES MAX. XX MIN. XX

Q.A. CATEGORY A-3
DRAWN BY: J Pepe DATE: 2/29/2000
CHECKED BY
DESIGN APPROVAL
ENGINEER APPROVAL
SUPVR. APPROVAL
NEXT ASSEMBLY

BROOKHAVEN NATIONAL LABORATORY
UPTON, N.Y. 11973
AGS CONTROLS WIRING DIAGRAM
BLDG 911B
AGS GAUSS CLOCK (SLOT 17)

SIZE D | DRAWING NUMBER | REV. A
MATERIAL: —— | SCALE: NA | WEIGHT: – | SHEET 30

*AUTOCAD

Bill Venegas, BNL 5/14/2003 10:25 AM ags_res-chassis.dwg

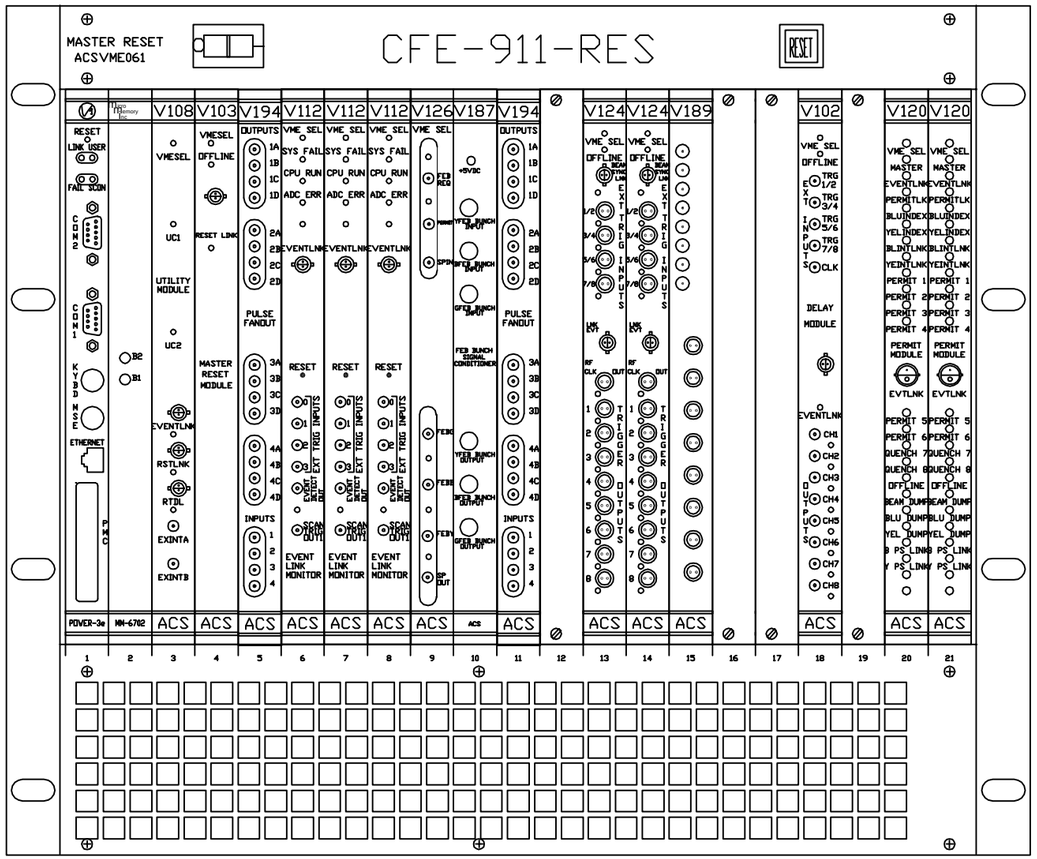

FRONT VIEW

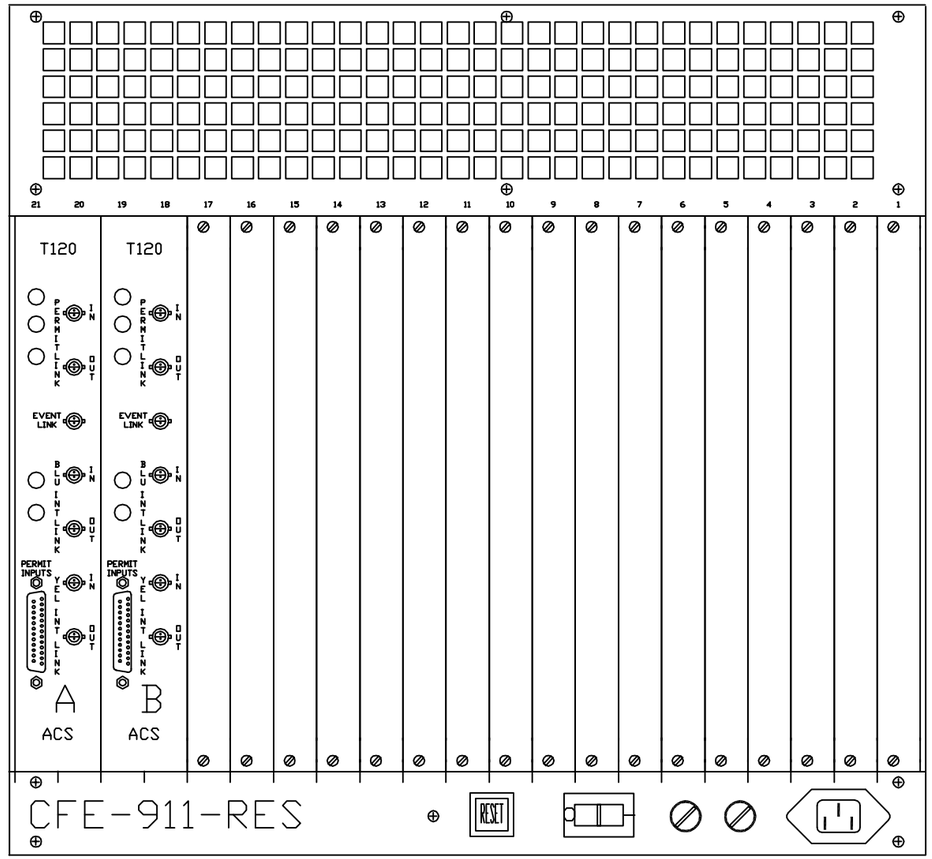

REAR VIEW

-3	-2	-1	REF DESIGNATOR	ITEM NO.	DESCRIPTION	MAT'L DWG NO.,BNL NO.
		1	SLOT 15	16	V189 ECL TO TTL MODULE	94028???
		1	SLOT 18	15	V102 DELAY MODULE	94028072
		2	SLOT 13,14	14	V124 Beam Sync Decoder Module	94028430
		2	SLOT 18-21	13	T120 PERMIT SYSTEM TRANSITION MOD	94028188-2
		2	SLOT 20,21	12	V120 PERMIT SYSTEM MODULE	94028077
		1	SLOTS12-20	11	BLANKS	
		1	SLOT 11	10	V194 PULSE FANOUT MODULE	94028196
		1	SLOT 10	9	V187 FEB BUNCH SIGNAL CONDITIONER	D09-E2935
		1	SLOT 9	8	V126 FEB CONTROL MODULE	94028782
		1	SLOTS 6-8	7	V112 EVENT LINK MONITOR	
		1	SLOT 5	6	V194 PULSE FANOUT MODULE	94028196
		1	SLOT 4	5	V103 RESET GENERATOR ASSY	94028054
		1	SLOT 3	4	V108 UTILITY MODULE	94028094
		1	SLOT 2	3	MEMORY MODULE (MICRO MEM)	MM-6702
		1	SLOT 1	2	FEC (POWER3e)	603-P3E200-1
		1	N/A	1	VME CHASSIS	RHIC-93008000

QTY REQD

INTERPRET IN GENERAL ACCORDANCE WITH ASME Y14.24M-1989

UNLESS OTHERWISE SPECIFIED DIMENSIONS ARE IN INCHES

DECIMAL TOLERANCES
.X ±.030
.XX ±.015
.XXX ±.005
ANGULAR TOLERANCE ± .5°

NA FINISH

BREAK SHARP EDGES MAX. XX MIN. XX

OUTSTANDING ECN

Q.A. CATEGORY A-3

DRAWN BY J Pepe DATE 3/16/2000

CHECKED BY

DESIGN APPROVAL

ENGINEER APPROVAL

SUPVR. APPROVAL

NEXT ASSEMBLY

BROOKHAVEN NATIONAL LABORATORY
UPTON, N.Y. 11973

C-A CONTROLS

Bldg 911B

VME CHASSIS CFE-911-RES

SIZE D

DRAWING NUMBER

REV. A

MATERIAL: ——— SCALE: NA WEIGHT: – SHEET 31

*AUTOCAD

REV.	ZONE	ECN NO.	DATE	BY	CKR	APP.

Bill Venegas, BNL 5/16/2003 9:38 AM v108_fec_res.dwg

FRONT END COMPUTER
BLDG #: 911B
RACK #: 5322
CHASSIS ID: CFE-911-RES
SLOT#: 1
FEC NAME: cfe-911-res

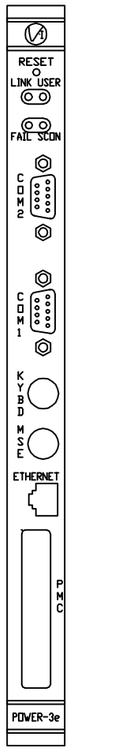

ETHERNET NETWORK

REF. NETWORK DIAGRAM

MM-6702 MEMORY MODULE
BLDG #: 911B
RACK #: 5322
CHASSIS ID: CFE-911-RES
SLOT #: 2
A32 BASE ADDRESS: 80000000

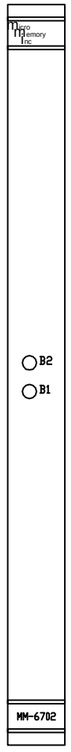

JUMPER LIST
1. REMOVE E1.
2. INSTALL E15.
3. SW3 CLOSE ALL POSITIONS. LOWER LIMIT=XX000000
4. SW2 CLOSE POSITIONS 7 AND 8. UPPER LIMIT=XX3FFFFE
5. SW1 CLOSE POSITION 1. BASE=80XXXXXX
6. INSTALL E14 AND E25 TO ENABLE BATTERIES
7. SW4 ALL OPEN.
8. SW5 ALL OPEN.
9. SW6 ALL OPEN.

DEVICE: V108 UTILITY MODULE
BLDG #: 911B
RACK #: 5322
CHASSIS ID: CFE-911-RES
SLOT #: 3
A24 BASE ADDRESS: 0XF0004000

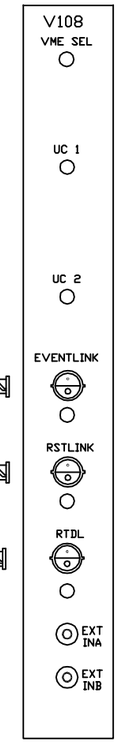

ASSY# 94028094

RHIC EVENT LINK
BLDG #: 911B
RACK #: 5322
FANOUT #: A

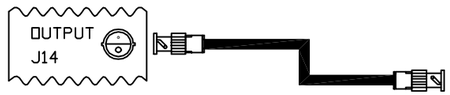

RESET LINK
BLDG #: 911B
RACK #: 5322
FANOUT #: B

REAL TIME DATA LINK
BLDG #: 911B
RACK #: 5322
FANOUT #: C

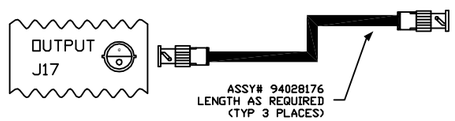

JUMPER LIST

E25 through E50 are configured for remote reset address at the time of board acceptance test.
DO NOT MODIFY!

Remote reset pulls VME SYS Reset.
E58-E60, E59-E61

A24 BASE ADDRESS= 4000h
E57-E13, E2-E14, E3-E15, E4-E16, E5-E17, E6-E18
E7-E19, E8-E20, E9-E21, E10-E22, E11-E24, E57-E23
SW1=OPEN
SW2=CLOSED
SW3=OPEN
SW4=OPEN

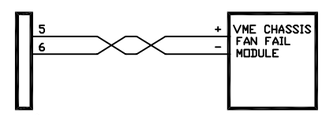

-3	-2	-1	QTY REQD	REF DESIGNATOR	ITEM NO.	DESCRIPTION	MAT'L DWG NO./MFG NO.

INTERPRET IN GENERAL ACCORDANCE WITH ASME Y14.24M-1989
UNLESS OTHERWISE SPECIFIED DIMENSIONS ARE IN INCHES
DECIMAL TOLERANCES .X ±.030 .XX ±.015 .XXX ±.005
ANGULAR TOLERANCE ± .5°
FINISH: NA
BREAK SHARP EDGES MAX. XX MIN. XX
OUTSTANDING ECN

Q.A. CATEGORY A-3
DRAWN BY: Venegas 5/16/03
CHECKED BY
DESIGN APPROVAL
ENGINEER APPROVAL
SUPVR. APPROVAL
NEXT ASSEMBLY

BROOKHAVEN NATIONAL LABORATORY
UPTON, N.Y. 11973
C-AD CONTROLS WIRING DIAGRAM
VME CHASSIS CFE-911-RES
FT END COMP/V108 UTIL MODULE

SIZE D DRAWING NUMBER REV. A
MATERIAL: —— SCALE: NA WEIGHT: – SHEET 31.1

*AUTOCAD

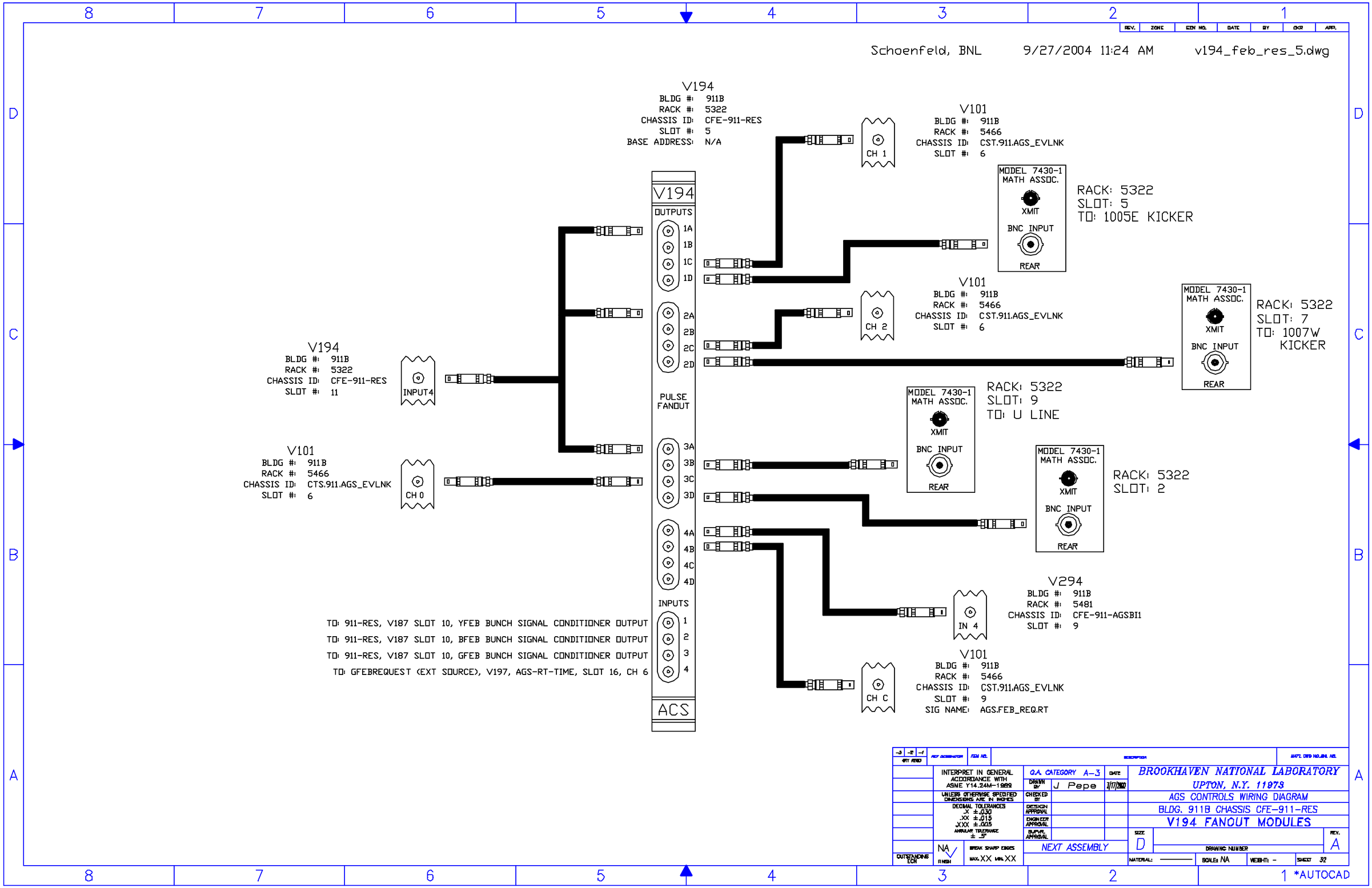

Schoenfeld, BNL 9/27/2004 11:24 AM v194_feb_res_5.dwg
V194
BLDG #: 911B
RACK #: 5322
CHASSIS ID: CFE-911-RES
SLOT #: 5
BASE ADDRESS: N/A
V101
BLDG #: 911B
RACK #: 5466
CHASSIS ID: CST.911.AGS_EVLNK
SLOT #: 6
CH 1
MODEL 7430-1
MATH ASSOC.
XMIT
BNC INPUT
REAR
RACK: 5322
SLOT: 5
TO: 1005E KICKER
V194
OUTPUTS
1A
1B
1C
1D
2A
2B
2C
2D
PULSE FANOUT
3A
3B
3C
3D
4A
4B
4C
4D
INPUTS
1
2
3
4
ACS
V101
BLDG #: 911B
RACK #: 5466
CHASSIS ID: CST.911.AGS_EVLNK
SLOT #: 6
CH 2
MODEL 7430-1
MATH ASSOC.
XMIT
BNC INPUT
REAR
RACK: 5322
SLOT: 7
TO: 1007W KICKER
V194
BLDG #: 911B
RACK #: 5322
CHASSIS ID: CFE-911-RES
SLOT #: 11
INPUT4
MODEL 7430-1
MATH ASSOC.
XMIT
BNC INPUT
REAR
RACK: 5322
SLOT: 9
TO: U LINE
V101
BLDG #: 911B
RACK #: 5466
CHASSIS ID: CTS.911.AGS_EVLNK
SLOT #: 6
CH 0
MODEL 7430-1
MATH ASSOC.
XMIT
BNC INPUT
REAR
RACK: 5322
SLOT: 2
V294
BLDG #: 911B
RACK #: 5481
CHASSIS ID: CFE-911-AGSBI1
SLOT #: 9
IN 4
TO: 911-RES, V187 SLOT 10, YFEB BUNCH SIGNAL CONDITIONER OUTPUT
TO: 911-RES, V187 SLOT 10, BFEB BUNCH SIGNAL CONDITIONER OUTPUT
TO: 911-RES, V187 SLOT 10, GFEB BUNCH SIGNAL CONDITIONER OUTPUT
TO: GFEBREQUEST (EXT SOURCE), V197, AGS-RT-TIME, SLOT 16, CH 6
V101
BLDG #: 911B
RACK #: 5466
CHASSIS ID: CST.911.AGS_EVLNK
SLOT #: 9
SIG NAME: AGS.FEB_REQ.RT
CH C
INTERPRET IN GENERAL ACCORDANCE WITH ASME Y14.24M-1989
UNLESS OTHERWISE SPECIFIED DIMENSIONS ARE IN INCHES
DECIMAL TOLERANCES .X ±.030 .XX ±.015 .XXX ±.005
ANGULAR TOLERANCE ± .5°
NA
FINISH
BREAK SHARP EDGES MAX. XX MIN. XX
Q.A. CATEGORY A-3
DRAWN BY J Pepe
CHECKED BY
DESIGN APPROVAL
ENGINEER APPROVAL
SUPVR. APPROVAL
NEXT ASSEMBLY
BROOKHAVEN NATIONAL LABORATORY
UPTON, N.Y. 11973
AGS CONTROLS WIRING DIAGRAM
BLDG. 911B CHASSIS CFE-911-RES
V194 FANOUT MODULES
SIZE D
REV. A
DRAWING NUMBER
MATERIAL:
SCALE: NA
WEIGHT: -
SHEET 32
1 *AUTOCAD

REV.	ZONE	ECN NO.	DATE	BY	CKR	APP.

Bill Venegas, BNL 5/14/2003 10:58 AM FEB_BUNCH_SIGNAL_C.dwg

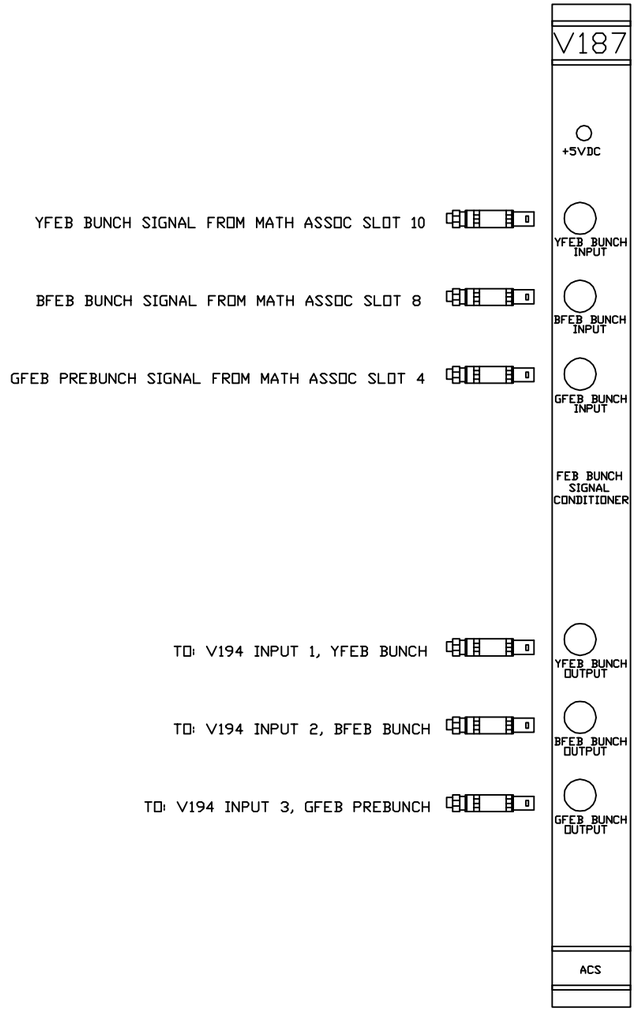

-3	-2	-1	REF DESIGNATOR	ITEM NO.	DESCRIPTION	MAT'L DWG NO./PML NO.
QTY REQD						

INTERPRET IN GENERAL ACCORDANCE WITH ASME Y14.24M–1989

UNLESS OTHERWISE SPECIFIED DIMENSIONS ARE IN INCHES

DECIMAL TOLERANCES
.X ±.030
.XX ±.015
.XXX ±.005
ANGULAR TOLERANCE ± .5°

OUTSTANDING ECN

NA
FINISH

BREAK SHARP EDGES
MAX. XX MIN. XX

Q.A. CATEGORY A–3		DATE
DRAWN BY	AL WATSON	4/14/00
CHECKED BY		
DESIGN APPROVAL		
ENGINEER APPROVAL		
SUPVR. APPROVAL		

NEXT ASSEMBLY

BROOKHAVEN NATIONAL LABORATORY
UPTON, N.Y. 11973

AGS CONTROLS WIRING DIAGRAM
BLDG. 911B CHASSIS CFE–911–RES

FEB BUNCH SIGNAL CONDITIONER

SIZE	DRAWING NUMBER	REV.
D		A

MATERIAL:	SCALE: NA	WEIGHT:	SHEET 32.5

*AUTOCAD

REV.	ZONE	ECN NO.	DATE	BY	CKD	APP.

Schoenfeld, bnl 9/27/2004 2:54 PM v126_res.dwg

V126
BLDG #: 911B
RACK #: 5322
CHASSIS ID: CFE-911-RES
SLOT #: 9
BASE ADDRESS: 8000

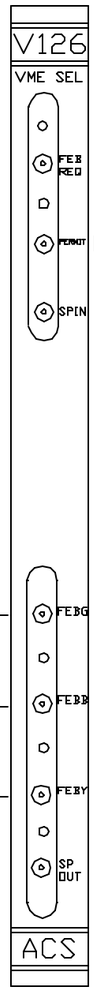

GFEBREQUEST, V101, CTS.911.AGS_EVLNK, SLOT 12, CH 6

BFEBREQUEST, V101, CTS.911.AGS_EVLNK, SLOT 9, CH B

YFEBREQUEST, V101, CTS.911.AGS_EVLNK, SLOT 9, CH A

V294
BLDG #: 911B
RACK #: 5481
CHASSIS ID: CFE-911-AGSBI1
SLOT #: 9

OUT 1

SHEET 36 BEAM PERMIT SYSTEM
BLDG #: 911B
RACK #: 5322
CHASSIS ID: CFE-911-RES
SLOT #: CHASSIS REAR

PERMIT LEVEL

-3	-2	-1	REF DESIGNATION	ECN NO.	DESCRIPTION	MFG. DATA NO./INT. NO.
QTY REQD						

INTERPRET IN GENERAL ACCORDANCE WITH ASME Y14.24M-1989
UNLESS OTHERWISE SPECIFIED DIMENSIONS ARE IN INCHES
DECIMAL TOLERANCES .X ±.030 .XX ±.015 .XXX ±.005
ANGULAR TOLERANCE ± .5°
NA FINISH
BREAK SHARP EDGES
MAX. XX MIN. XX
OUTSTANDING ECN

Q.A. CATEGORY A-3

		DATE
DRAWN BY	J Pepe	7/21/2002
CHECKED BY		
DESIGN APPROVAL		
ENGINEER APPROVAL		
SUPVR. APPROVAL		

NEXT ASSEMBLY

BROOKHAVEN NATIONAL LABORATORY
UPTON, N.Y. 11973
AGS CONTROLS WIRING DIAGRAM
BLDG. 911B CHASSIS CFE-911-RES
V126 REQUEST SELECTION MODULE

SIZE D | DRAWING NUMBER | REV. A
MATERIAL: —— | SCALE: NA | WEIGHT: – | SHEET 33

*AUTOCAD

REV.	ZONE	ECN NO.	DATE	BY	CKR	APP.

C-A, BNL 7/3/01 11:13 AM v194_feb_res11.dwg

V194
BLDG #: 911B
RACK #: 5322
CHASSIS ID: CFE-911-RES
SLOT #: 11
BASE ADDRESS: N/A

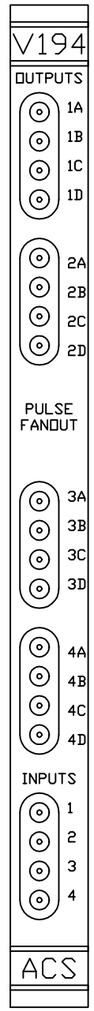

FEB PREBUNCH, V194, CFE-911-RES, SLOT 5, 3A

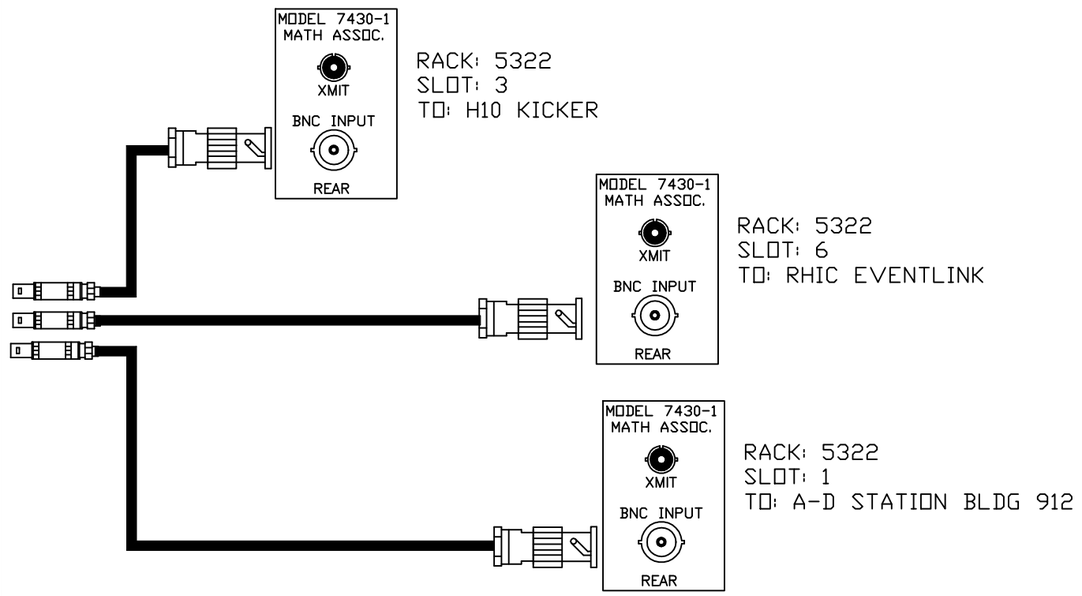

-3	-2	-1	QTY REQD	REF DESIGNATOR	ITEM NO.	DESCRIPTION	MAT'L DWG NO./BNL NO.

INTERPRET IN GENERAL ACCORDANCE WITH ASME Y14.24M-1989
UNLESS OTHERWISE SPECIFIED DIMENSIONS ARE IN INCHES
DECIMAL TOLERANCES
.X ±.030
.XX ±.015
.XXX ±.005
ANGULAR TOLERANCE
± .5°
NA FINISH
BREAK SHARP EDGES
MAX. XX MIN. XX
OUTSTANDING ECN

Q.A. CATEGORY A-3	DATE	
DRAWN BY J Pepe	3/17/2000	
CHECKED BY		
DESIGN APPROVAL		
ENGINEER APPROVAL		
SUPVR. APPROVAL		

NEXT ASSEMBLY

BROOKHAVEN NATIONAL LABORATORY
UPTON, N.Y. 11973
AGS CONTROLS WIRING DIAGRAM
BLDG. 911B CHASSIS CFE-911-RES
V194 FANOUT MODULES

SIZE D | DRAWING NUMBER | REV. A

MATERIAL: ——— SCALE: NA WEIGHT: — SHEET 34

8 7 6 5 4 3 2 1 *AUTOCAD

BNL, BNL 4/11/00 9:46 AM v120a_1.dwg

ATR TRANSFER LINE SYSTEM

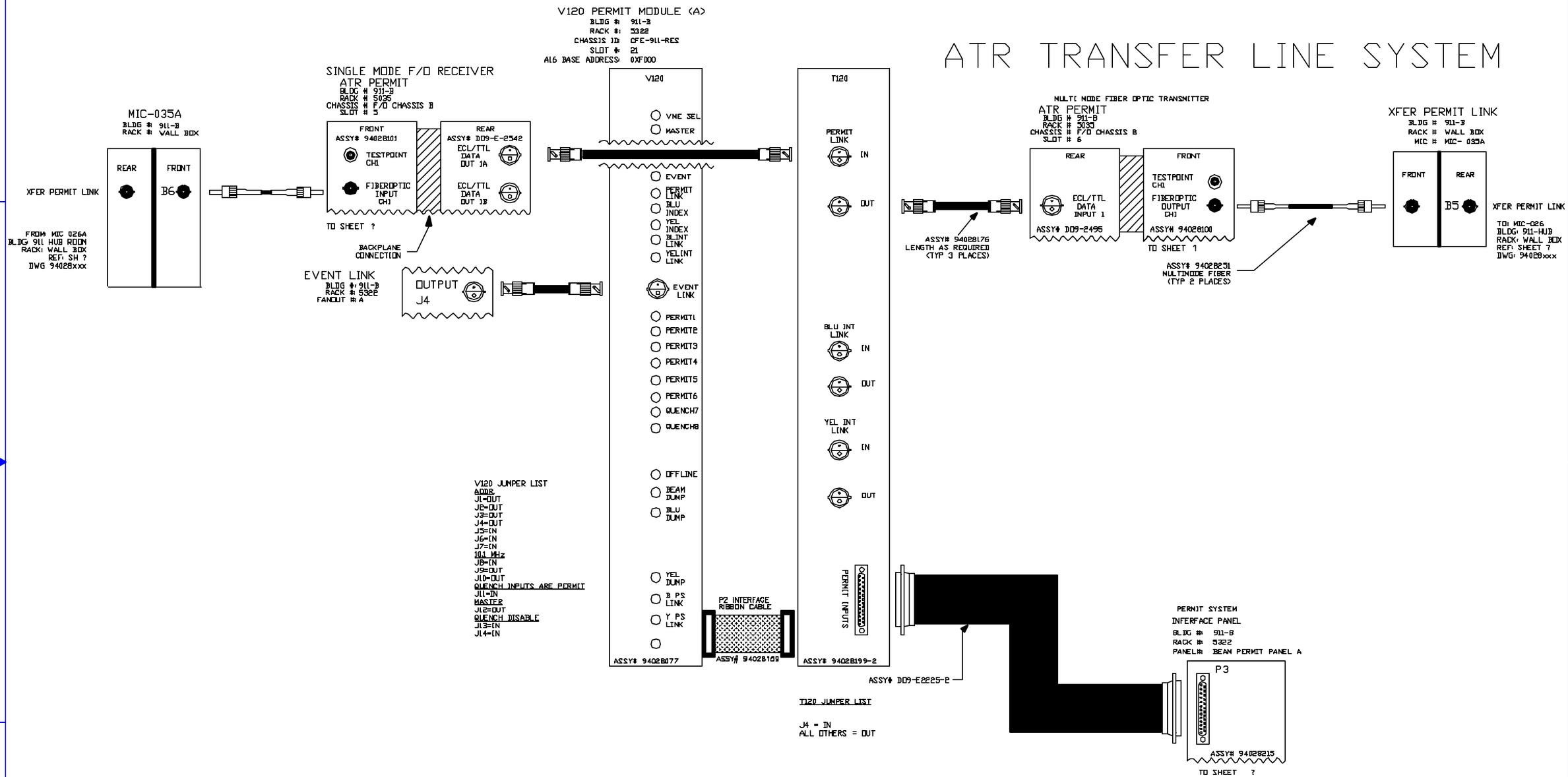

V120 JUMPER LIST
ADDR
J1=OUT
J2=OUT
J3=OUT
J4=OUT
J5=IN
J6=IN
J7=IN
10.1 MHz
J8=IN
J9=OUT
J10=OUT
QUENCH INPUTS ARE PERMIT
J11=IN
MASTER
J12=OUT
QUENCH DISABLE
J13=IN
J14=IN

T120 JUMPER LIST

J4 = IN
ALL OTHERS = OUT

REV.	ZONE	ECN NO.	DATE	BY	CKR	APP.

-3 -2 -1 DRY REQD	REF DESIGNATOR	ITEM NO	DESCRIPTION	MAT'L BAR NO/SNL NO.

INTERPRET IN GENERAL ACCORDANCE WITH ASME Y14 24M-1989
UNLESS OTHERWISE SPECIFIED DIMENSIONS ARE IN INCHES
DECIMAL TOLERANCES .X ±.030 .XX ±.015 .XXX ±.005 ANGULAR TOLERANCE ± .5°
NA FINISH
BREAK SHARP EDGES MAX XX MIN XX
OUTSTANDING ECN

QA CATEGORY A-3		DATE
DRAWN BY	Ed Koropsak	4/6/00
CHECKED BY		
DESIGN APPROVAL		
ENGINEER APPROVAL	R. MICHNOFF	4/6/00
SUPVR. APPROVAL		

NEXT ASSEMBLY

BROOKHAVEN NATIONAL LABORATORY
UPTON, N.Y. 11973
RHIC CONTROLS WIRING DIAGRAM
911-B, CHASSIS CFE-911-RES
V120/T120 PERMIT SYSTEM

SIZE D | 94028xxx | REV A
DRAWING NUMBER
MATERIAL ——— | SCALE NA | WEIGHT: – | SHEET 36

1 *AUTOCAD

BNL, BNL 4/11/00 9:47 AM v120a_2.dwg

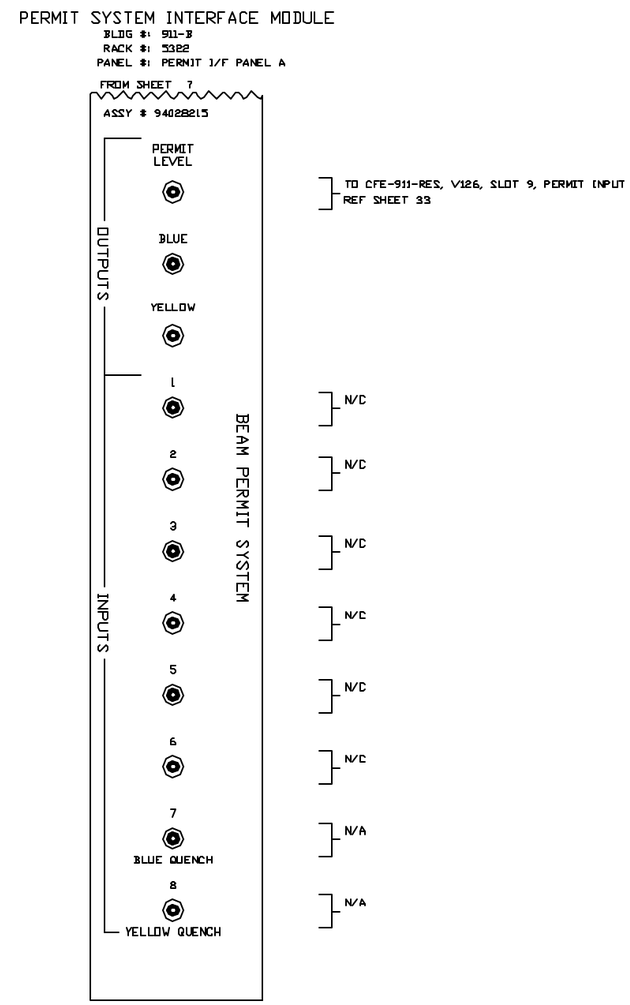

REV.	ZONE	ECN NO.	DATE	BY	CKR	APP.

-3 -2 -1 DTY REQD	REF DESIGNATOR	ITEM NO	DESCRIPTION	MAT'L INV NO./INL NO.

INTERPRET IN GENERAL ACCORDANCE WITH ASME Y14.24M-1989

UNLESS OTHERWISE SPECIFIED DIMENSIONS ARE IN INCHES

DECIMAL TOLERANCES
.X ±.030
.XX ±.015
.XXX ±.005
ANGULAR TOLERANCE ± .5°

NA FINISH

BREAK SHARP EDGES
MAX XX MIN XX

OUTSTANDING ECN

Q.A. CATEGORY A-3		DATE
DRAWN BY	Ed Koropsak	4/6/00
CHECKED BY		
DESIGN APPROVAL		
ENGINEER APPROVAL	R. MICHNOFF	4/6/00
SUPVR. APPROVAL		

NEXT ASSEMBLY

BROOKHAVEN NATIONAL LABORATORY
UPTON, N.Y. 11973

RHIC CONTROLS WIRING DIAGRAM
911-B RACK 5322

PERMIT SYSTEM INTERFACE PANEL

SIZE D | DRAWING NUMBER ? | REV A

MATERIAL — | SCALE NA | WEIGHT: – | SHEET 35

1 *AUTOCAD

BNL, BNL 4/11/00 9:48 AM v120b_1.dwg

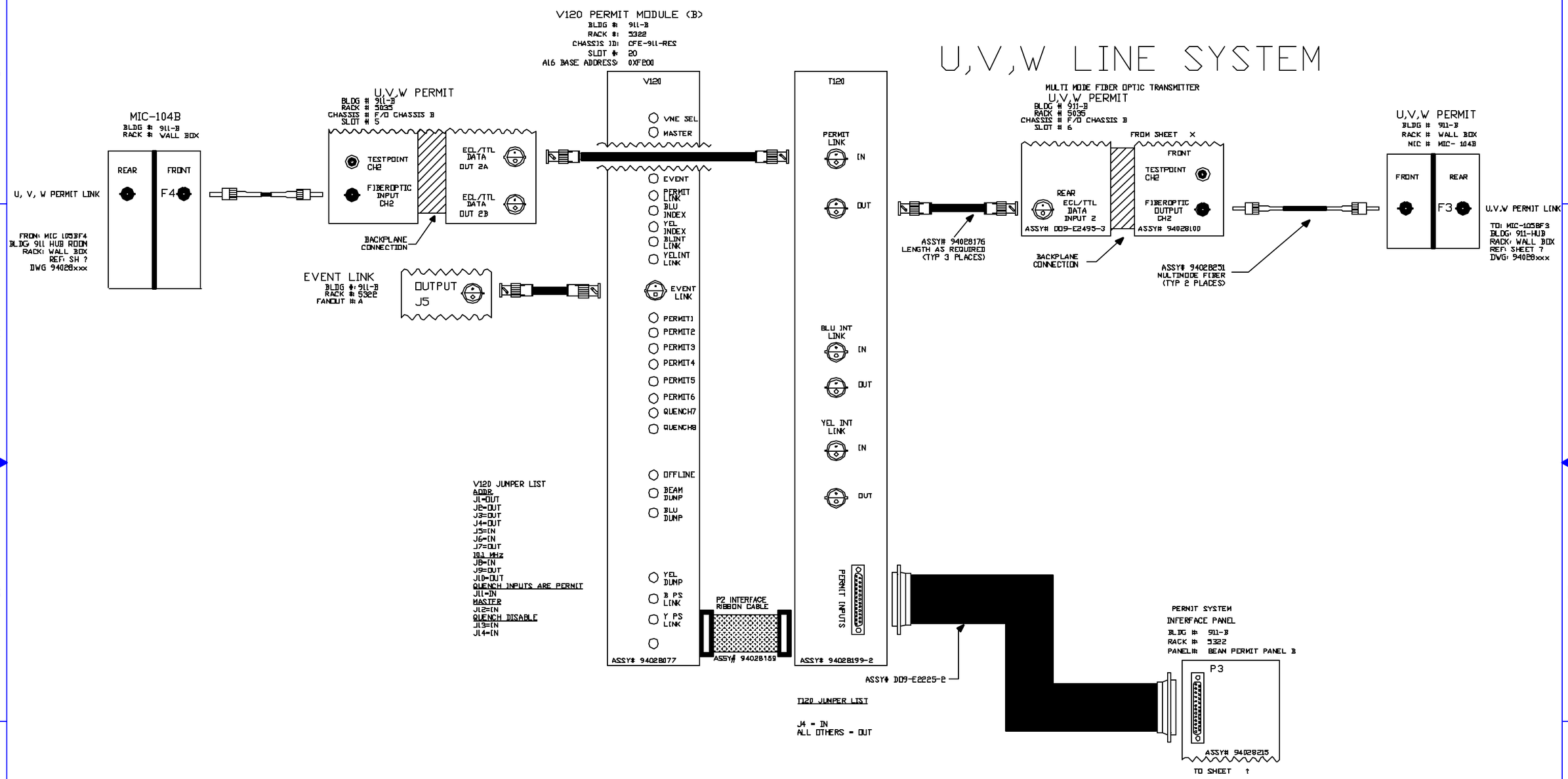

REV.	ZONE	ECN NO.	DATE	BY	CKR	APP.

-3 -2 -1 DTY REQD	REF DESIGNATOR	ITEM NO	DESCRIPTION	MAT'L DWG NO./INL NO.

INTERPRET IN GENERAL ACCORDANCE WITH ASME Y14 24M-1989
UNLESS OTHERWISE SPECIFIED DIMENSIONS ARE IN INCHES
DECIMAL TOLERANCES .X ±.030 .XX ±.015 .XXX ±.005
ANGULAR TOLERANCE ± .5°
NA FINISH
BREAK SHARP EDGES MAX XX MIN XX
OUTSTANDING ECN

Q.A. CATEGORY A-3		DATE
DRAWN BY	Ed Koropsak	4/8/00
CHECKED BY		
DESIGN APPROVAL		
ENGINEER APPROVAL	R. MICHNOFF	4/8/00
SUPVR. APPROVAL		

NEXT ASSEMBLY

BROOKHAVEN NATIONAL LABORATORY
UPTON, N.Y. 11973
RHIC CONTROLS WIRING DIAGRAM
911-B, CHASSIS CFE-911-RES
V120/T120 PERMIT SYSTEM

SIZE D | DRAWING NUMBER ? | REV A
MATERIAL — | SCALE NA | WEIGHT: - | SHEET 37

1 *AUTOCAD

REV.	ZONE	ECN NO.	DATE	BY	CKR	APP.

Bill Venegas, BNL 5/14/2003 11:25 AM v120b_2.dwg

PERMIT SYSTEM INTERFACE MODULE

BLDG #: 911-B
RACK #: 5322
PANEL #: PERMIT I/F PANEL B

FROM SHEET ?

ASSY # 94028215

BEAM PERMIT SYSTEM

OUTPUTS

PERMIT LEVEL — TO AGS BEAM INHIBIT RACK 61 TERMINAL ROOM #222

BLUE

YELLOW

INPUTS

1 — N/C

2 — N/C

3 — N/C

4 — N/C

5 — N/C

6 — N/C

7 — BLUE QUENCH — N/A

8 — YELLOW QUENCH — N/A

-3	-2	-1	REF DESIGNATOR	ITEM NO.	DESCRIPTION	MAT'L DWG NO./JNL NO.
QTY REQD						

INTERPRET IN GENERAL ACCORDANCE WITH ASME Y14.24M-1989

UNLESS OTHERWISE SPECIFIED DIMENSIONS ARE IN INCHES

DECIMAL TOLERANCES
.X ±.030
.XX ±.015
.XXX ±.005
ANGULAR TOLERANCE ± .5°

NA — FINISH

BREAK SHARP EDGES MAX. XX MIN. XX

OUTSTANDING ECN

Q.A. CATEGORY A-3

DRAWN BY	Ed Koropsak	4/6/00
CHECKED BY		
DESIGN APPROVAL		
ENGINEER APPROVAL	R. MICHNOFF	4/6/00
SUPVR. APPROVAL		

NEXT ASSEMBLY

BROOKHAVEN NATIONAL LABORATORY
UPTON, N.Y. 11973

RHIC CONTROLS WIRING DIAGRAM

911-B RACK 5322

PERMIT SYSTEM INTERFACE PANEL

SIZE D — DRAWING NUMBER ? — REV. A

MATERIAL: ——— SCALE: NA WEIGHT: – SHEET 38

*AUTOCAD

REV.	ZONE	ECN NO.	DATE	BY	CKR	APP.

CONTROLS- 2/6/02 2:57 PM beam_sync_yel.dwg

SINGLE MODE F/O RECEIVER
BEAM SYNC YELLOW LINK

BLDG # 911B
RACK # R 5035A
CHASSIS # ACS F/O 042 DATA OUT 1B
SLOT # SLOT 9

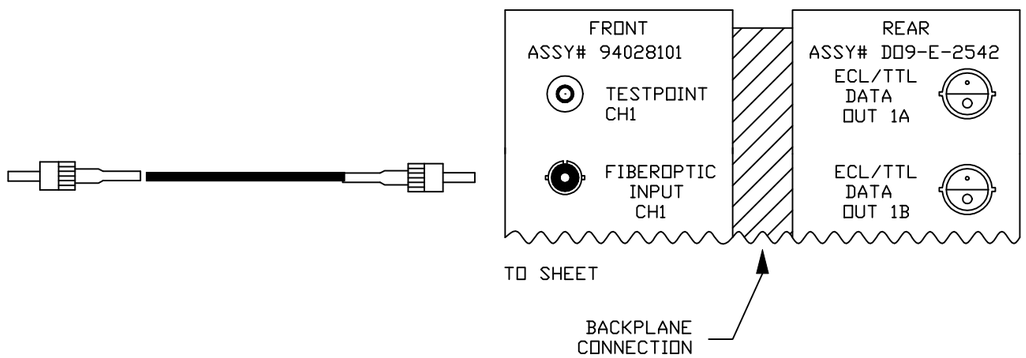

BEAM SYNC YELLOW

BLDG # 911B
RACK # R 5322
FANOUT # FANOUT D

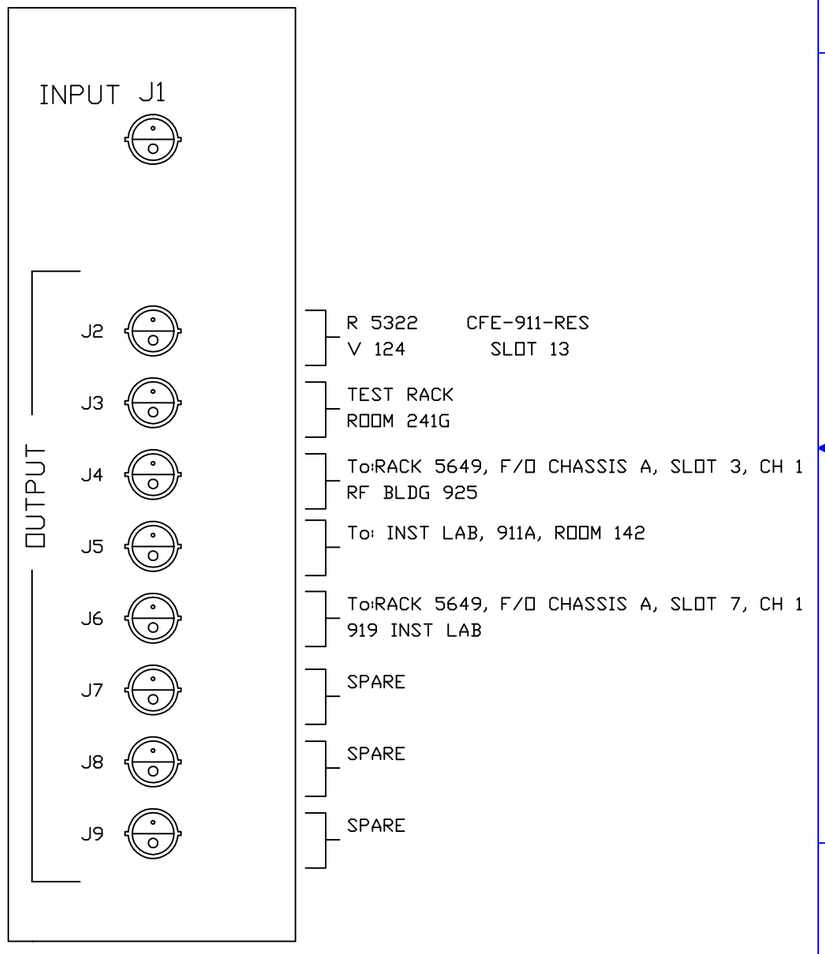

-3	-2	-1	QTY REQD	REF DESIGNATOR	ITEM NO.	DESCRIPTION	MAT'L DWG NO./PRL NO.

INTERPRET IN GENERAL ACCORDANCE WITH ASME Y14.24M–1989
UNLESS OTHERWISE SPECIFIED DIMENSIONS ARE IN INCHES
DECIMAL TOLERANCES .X ±.030 .XX ±.015 .XXX ±.005
ANGULAR TOLERANCE ± .5°
OUTSTANDING ECN
NA FINISH
BREAK SHARP EDGES MAX. XX MIN. XX

Q.A. CATEGORY A–3		DATE	BROOKHAVEN NATIONAL LABORATORY
DRAWN BY	Steve Lenski	03/09/2001	UPTON, N.Y. 11973
CHECKED BY			RHIC CONTROLS WIRING DIAGRAM
DESIGN APPROVAL			BLDG. 911B
ENGINEER APPROVAL		6/18/98	BEAM SYNC YELLOW FANOUT
SUPVR. APPROVAL			SIZE D — REV. A
NEXT ASSEMBLY			DRAWING NUMBER

MATERIAL: —— SCALE: NA WEIGHT: – SHEET 38A

1 *AUTOCAD

REV.	ZONE	ECN NO.	DATE	BY	CKR	APP.

C-A, BNL 8/8/01 2:45 PM V124bs_yel_res.dwg

V124 YELLOW BEAM SYNC MODULE

BLDG #: 911B
RACK #: 5322
CHASSIS ID: CFE-911-RES
SLOT #: 13
A16 BASE ADDRESS: 9000

EVENT LINK
BLDG #: 911B
RACK #: 5322
FANOUT #: D

OUTPUT
J2

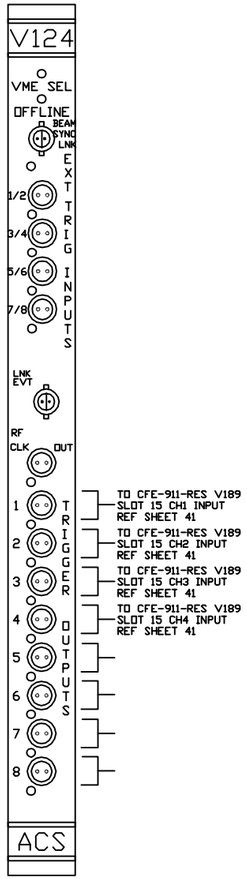

TO CFE-911-RES V189
SLOT 15 CH1 INPUT
REF SHEET 41

TO CFE-911-RES V189
SLOT 15 CH2 INPUT
REF SHEET 41

TO CFE-911-RES V189
SLOT 15 CH3 INPUT
REF SHEET 41

TO CFE-911-RES V189
SLOT 15 CH4 INPUT
REF SHEET 41

ADDRESS JUMPER LIST: 0X9000
JP1 OUT
JP27 IN
JP28 IN
JP29 OUT
JP5 IN

-3	-2	-1	QTY REQD	REF DESIGNATOR	ITEM NO.	DESCRIPTION	MAT'L DWG NO./PRL NO.

INTERPRET IN GENERAL ACCORDANCE WITH ASME Y14.24M-1989
UNLESS OTHERWISE SPECIFIED DIMENSIONS ARE IN INCHES
DECIMAL TOLERANCES .X ±.030 .XX ±.015 .XXX ±.005
ANGULAR TOLERANCE ± .5'
FINISH: NA
BREAK SHARP EDGES MAX. XX MIN. XX
OUTSTANDING ECN
NEXT ASSEMBLY

Q.A. CATEGORY A-3
DRAWN BY: VENEGAS — DATE: 5/16/00
CHECKED BY
DESIGN APPROVAL
ENGINEER APPROVAL
SUPVR. APPROVAL

BROOKHAVEN NATIONAL LABORATORY
UPTON, N.Y. 11973
C-AD CONTROLS WIRING DIAGRAM
BLDG. 911B CHASSIS CFE-911-RES
V124 BEAM SYNC MODULE

SIZE D — DRAWING NUMBER — REV. A
MATERIAL: ——— SCALE: NA WEIGHT: – SHEET 39

*AUTOCAD

REV.	ZONE	ECN NO.	DATE	BY	CKR	APP.

CONTROLS- 2/6/02 3:01 PM beam_sync_blue.dwg

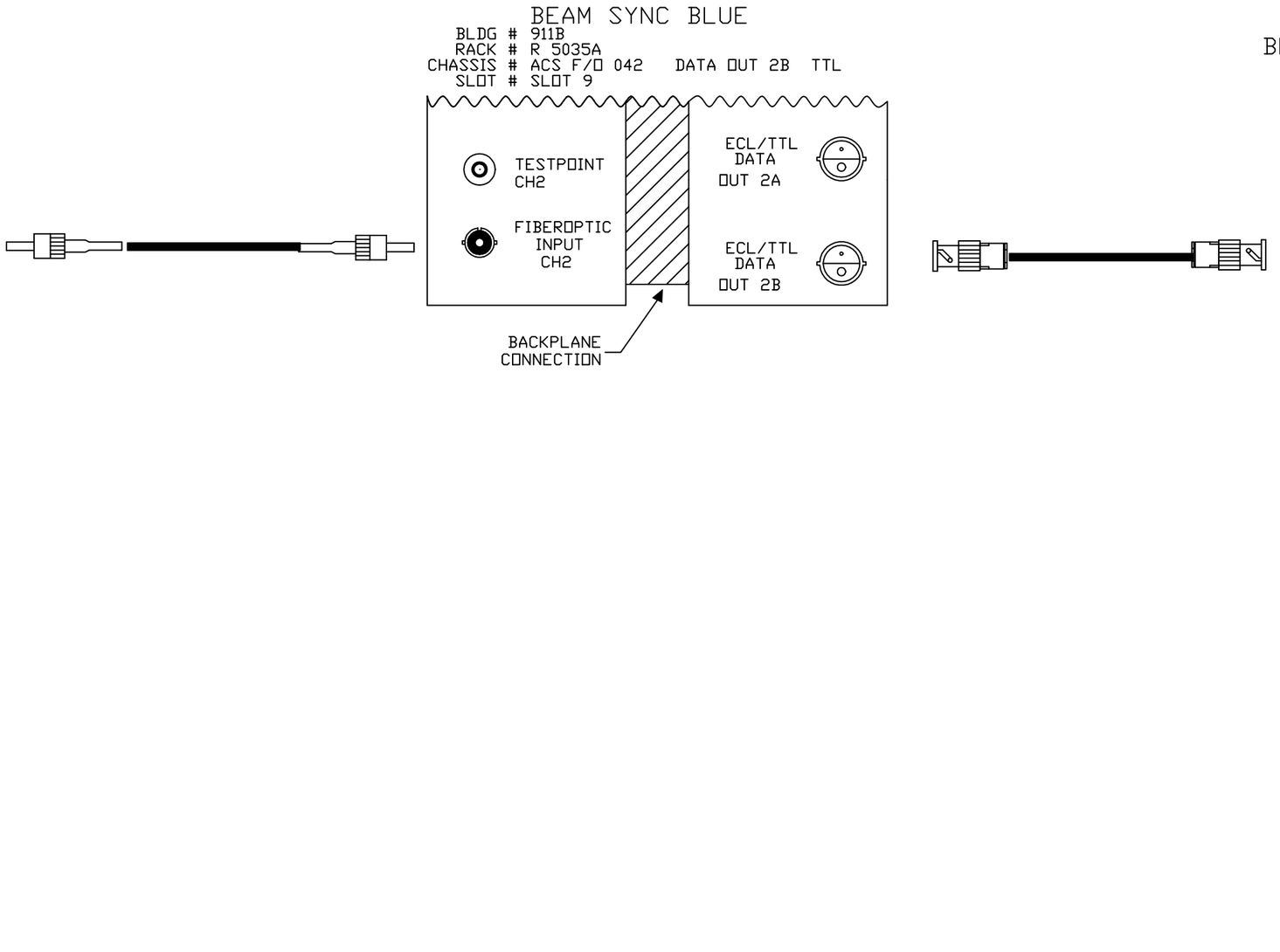

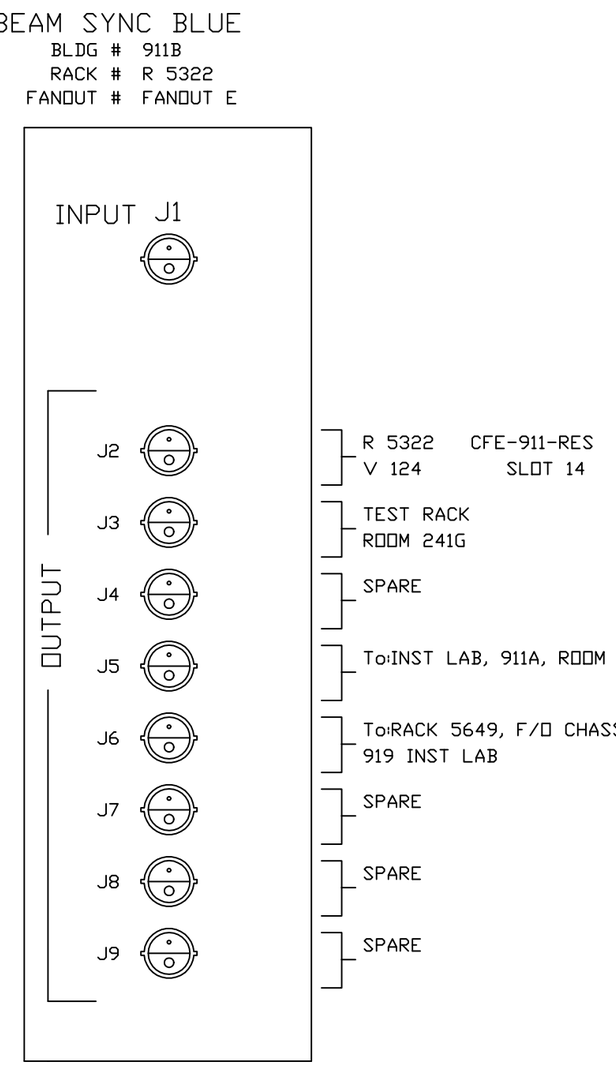

-3	-2	-1	REF DESIGNATOR	ITEM NO.	DESCRIPTION	MAT'L DWG NO./BNL NO.
QTY REQD						

INTERPRET IN GENERAL ACCORDANCE WITH ASME Y14.24M–1989

UNLESS OTHERWISE SPECIFIED DIMENSIONS ARE IN INCHES

DECIMAL TOLERANCES .X ±.030 .XX ±.015 .XXX ±.005

ANGULAR TOLERANCE ± .5°

OUTSTANDING ECN

NA FINISH

BREAK SHARP EDGES MAX. XX MIN. XX

Q.A. CATEGORY A–3

NEXT ASSEMBLY

DRAWN BY	Steve Lenski	08/09/2011
CHECKED BY		
DESIGN APPROVAL		
ENGINEER APPROVAL		6/18/98
SUPVR. APPROVAL		

BROOKHAVEN NATIONAL LABORATORY
UPTON, N.Y. 11973

RHIC CONTROLS WIRING DIAGRAM

BLDG. 911B

BEAM SYNC BLUE FANOUT

SIZE D | DRAWING NUMBER | REV. A

MATERIAL: ——— SCALE: NA WEIGHT: – SHEET J9A

*AUTOCAD

REV.	ZONE	ECN NO.	DATE	BY	CKR	APP.

C-A, BNL 8/8/01 2:44 PM V124bs_blue_res.dwg

V124 BLUE BEAM SYNC MODULE

BLDG #: 911B
RACK #: 5322
CHASSIS ID: CFE-911-RES
SLOT #: 14
A16 BASE ADDRESS: 9800

EVENT LINK
BLDG #: 911B
RACK #: 5322
FANOUT #: E

OUTPUT
J2

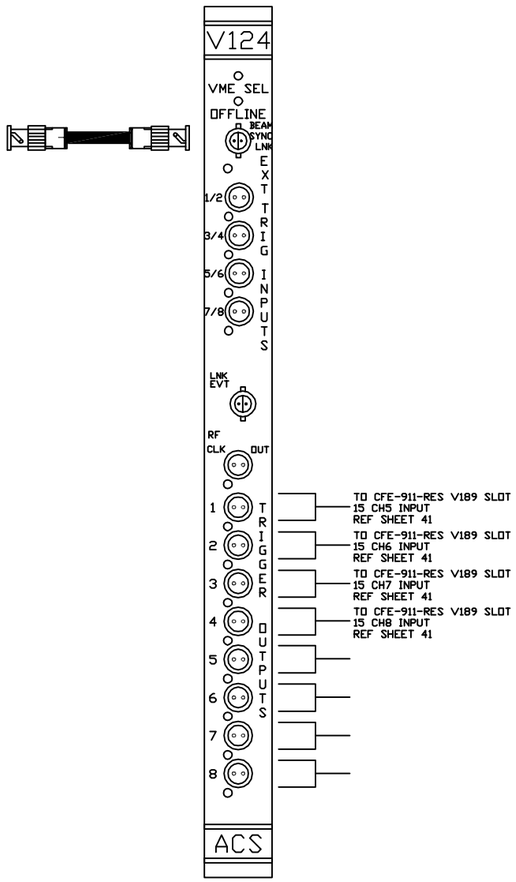

TO CFE-911-RES V189 SLOT 15 CH5 INPUT REF SHEET 41
TO CFE-911-RES V189 SLOT 15 CH6 INPUT REF SHEET 41
TO CFE-911-RES V189 SLOT 15 CH7 INPUT REF SHEET 41
TO CFE-911-RES V189 SLOT 15 CH8 INPUT REF SHEET 41

ADDRESS JUMPER LIST: 0X9800
JP1 OUT
JP27 IN
JP28 IN
JP29 OUT
JP5 OUT

-3	-2	-1 QTY REQD	REF DESIGNATOR	ITEM NO.	DESCRIPTION	MAT'L DWG NO./BNL NO.

INTERPRET IN GENERAL ACCORDANCE WITH ASME Y14.24M-1989
UNLESS OTHERWISE SPECIFIED DIMENSIONS ARE IN INCHES
DECIMAL TOLERANCES .X ±.030 .XX ±.015 .XXX ±.005
ANGULAR TOLERANCE ± .5°
FINISH: NA
BREAK SHARP EDGES MAX. XX MIN. XX
OUTSTANDING ECN
NEXT ASSEMBLY

Q.A. CATEGORY A-3		DATE
DRAWN BY	VENEGAS	5/16/00
CHECKED BY		
DESIGN APPROVAL		
ENGINEER APPROVAL		
SUPVR. APPROVAL		

BROOKHAVEN NATIONAL LABORATORY
UPTON, N.Y. 11973
C-AD CONTROLS WIRING DIAGRAM
BLDG. 911B CHASSIS CFE-911-RES
V124 BEAM SYNC MODULE

SIZE D | DRAWING NUMBER | REV. A
MATERIAL: ——— | SCALE: NA | WEIGHT: – | SHEET 40

*AUTOCAD

REV.	ZONE	ECN NO.	DATE	BY	CKR	APP.

C-A, BNL 7/3/01 11:44 AM V189_ecl_ttl.dwg

V189 ECL TO TTL MODULE

BLDG #: 911B
RACK #: 5035
CHASSIS ID: CFE-911-RES
SLOT #: 15
NONE BASE ADDRESS: NONE

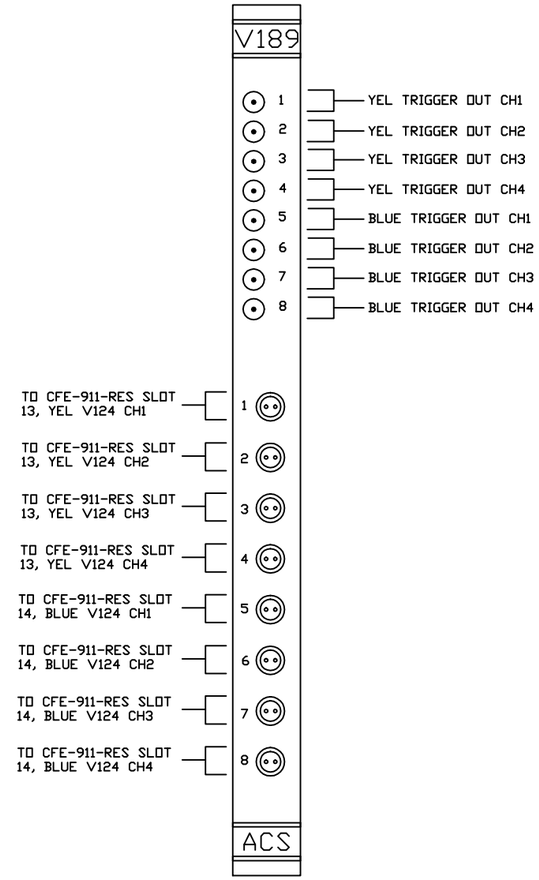

-3	-2	-1	QTY REQD	REF DESIGNATOR	ITEM NO.	DESCRIPTION	MAT'L DWG NO./BNL NO.

INTERPRET IN GENERAL ACCORDANCE WITH ASME Y14.24M-1989

UNLESS OTHERWISE SPECIFIED DIMENSIONS ARE IN INCHES

DECIMAL TOLERANCES
.X ±.030
.XX ±.015
.XXX ±.005
ANGULAR TOLERANCE
± .5°

NA FINISH

BREAK SHARP EDGES
MAX. XX MIN. XX

OUTSTANDING ECN

NEXT ASSEMBLY

Q.A. CATEGORY	A-3	DATE
DRAWN BY	VENEGAS	5/17/00
CHECKED BY		
DESIGN APPROVAL		
ENGINEER APPROVAL		
SUPVR. APPROVAL		

BROOKHAVEN NATIONAL LABORATORY
UPTON, N.Y. 11973

C-AD CONTROLS WIRING DIAGRAM

BLDG. 911B CHASSIS CFE-911-RES

V189 ECL TO TTL MODULE

SIZE D | DRAWING NUMBER RD D09- | REV. A

MATERIAL: ——— | SCALE: NA | WEIGHT: – | SHEET 41

*AUTOCAD

V102 DELAY MODULE

BLDG #: 911B
RACK #: 5322
CHASSIS ID: CFE-911-RES
SLOT #: 18
A16 BASE ADDRESS: E600

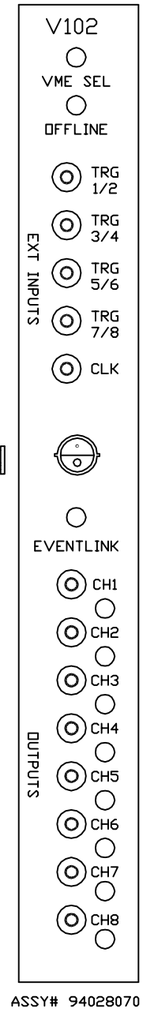

ASSY# 94028070

RHIC EVENT LINK

BLDG #: 911B
RACK #: 5322
FANOUT #: A

OUTPUT J6

ASSY# 94028176
LENGTH AS REQUIRED

TO PATCH PANEL 55H32 REF SHEET x

ev-ags_permit

SHEET 35 CH 7

V101

BLDG #: 911B
RACK #: 5466
CHASSIS ID: CST.911B.AGS_EVLNK
SLOT #: 10

TEST SIGNAL TO PERMIT A INPUT 3
RACK 3494 CEX-911-AGSBI1

V102 DELAY MODULE JUMPER LIST

A16 BASE ADDRESS 0XFFFFE600 JP1=OUT JP2=OUT JP3=OUT JP4=IN JP5=IN JP6=OUT JP7=OUT
EVENT LINK INPUT JP8=IN JP9=OUT JP10=OUT
JP11=IN JP12=IN JP13=OUT JP14=IN

-3	-2	-1	QTY REQD	REF DESIGNATOR	ITEM NO.	DESCRIPTION	MAT'L DWG NO./BML NO.

INTERPRET IN GENERAL ACCORDANCE WITH ASME Y14.24M-1989
UNLESS OTHERWISE SPECIFIED DIMENSIONS ARE IN INCHES
DECIMAL TOLERANCES .X ±.030 .XX ±.015 .XXX ±.005 ANGULAR TOLERANCE ± .5'
NA FINISH
BREAK SHARP EDGES MAX. XX MIN. XX
OUTSTANDING ECN

Q.A. CATEGORY A-3 | DATE

DRAWN BY	Ed Koropsak	7/03/01
CHECKED BY		
DESIGN APPROVAL		
ENGINEER APPROVAL	R. MICHNOFF	7/03/01
SUPVR. APPROVAL		

NEXT ASSEMBLY

BROOKHAVEN NATIONAL LABORATORY
UPTON, N.Y. 11973
RHIC CONTROLS WIRING DIAGRAM
BLDG. 911B CHASSIS CFE-911-RES
V102 DELAY MODULE

SIZE D | DRAWING NUMBER | REV. A
MATERIAL: ——— | SCALE: NA | WEIGHT: – | SHEET 42

*AUTOCAD

REV.	ZONE	ECN NO.	DATE	BY	CKR	APP.

Controls, C-AD 4/9/2004 2:07 PM V103_res.dwg

V103 RESET LINK ENCODER

BLDG #: 911B
RACK #: 5322
CHASSIS ID: CFE-911-RES
SLOT #: 4
A16 BASE ADDRESS: 4000

RESET LINK FANOUT MODULE

BLDG # 911B
RACK # 5322
FANOUT # B

ASSY # DD9-E2442-5

INPUT J1

ASSY# 94028176
LENGTH AS REQUIRED

OUTPUT

- J2 — COMPUTER ROOM TEST RACK
- J3 — SPARE REF
- J4 — SPARE REF
- J5
- J6 — TO RACK 4536 SLOT 1 CH 2
- J7 — TO RACK 4536 SLOT 2 CH 2
- J8 — ROOM 241G (RF LAB) TEST RACK
- J9 — TO 911C LAB
- J10 — TO CFE-911-AGSBI1 SLOT 3 V108
- J11 — TO CST-911-BSTR-EVLNK
- J12 — TO CST-911B-VME
- J13 — SPARE
- J14 — TO RACK 5322 CFE-911-RES V108
- J15
- J16
- J17 — TO RACK 5035 F/O SLOT 8 CH 1

RESET LINK FANOUT MOD

BLDG #: 911B
RACK #: 5035
FANOUT #: X

ASSY# DD9-E-2442
INPUT J1

RESET LINK FANOUT MOD

BLDG #: 911B
RACK #: 5035
FANOUT #: C

ASSY# DD9-E-2442
INPUT J1

RESET LINK FANOUT MOD

BLDG #: 911B
RACK #: 5323
FANOUT #: ?

ASSY# DD9-E-2442
INPUT J1

-3	-2	-1	REF DESIGNATOR	ITEM NO.	DESCRIPTION	MAT'L DWG NO./PRL NO.
QTY REQD						

INTERPRET IN GENERAL ACCORDANCE WITH ASME Y14.24M-1989
UNLESS OTHERWISE SPECIFIED DIMENSIONS ARE IN INCHES
DECIMAL TOLERANCES .X ±.030 .XX ±.015 .XXX ±.005
ANGULAR TOLERANCE ± .5°
NA FINISH
BREAK SHARP EDGES MAX. XX MIN. XX
OUTSTANDING ECN

Q.A. CATEGORY A-3

DRAWN BY	Ed Koropsak	7/03/01
CHECKED BY		
DESIGN APPROVAL		
ENGINEER APPROVAL	R. MICHNOFF	7/03/01
SUPVR. APPROVAL		

NEXT ASSEMBLY

BROOKHAVEN NATIONAL LABORATORY
UPTON, N.Y. 11973
RHIC CONTROLS WIRING DIAGRAM
BLDG. 911B CHASSIS CFE-911-RES
V103 RESET LINK ENCODER

SIZE D | DRAWING NUMBER | REV. A
MATERIAL: ——— SCALE: NA WEIGHT: — SHEET 43

*AUTOCAD

PDF created with FinePrint pdfFactory Pro trial version http://www.fineprint.com

REV.	ZONE	ECN NO.	DATE	BY	CKR	APP.

Schoenfeld, Controls 10/18/2004 11:43 AM RESET_Fanouts.dwg

RESET LINK FANOUT

BLDG # 911B
RACK # R 5035
FANOUT # FANOUT X

FROM SHEET 43
ASSY # DD9-E2442-5

OUTPUT

J2	R 5034 F/O TTL CH 2A SLOT 1
J3	To: RACK 5649, F/O CHASSIS A, SLOT 2, CH 2 RF BLDG 925
J4	ToRACK 5649, F/O CHASSIS A, SLOT 6, CH 1 919 INST LAB
J5	TO: RK5649 F/O CHASSIS A SLOT 8 CH2 TO BLDG 957
J6	TO: RK 3370 CFE-911B-BSTR-GC, V10B SLOT 3 TO BLDG 911B
J7	TO: CFE-911B-RTDLL, V108 SLOT 3 REF 22
J8	SPARE
J9	SPARE
J10	SPARE
J11	SPARE
J12	SPARE
J13	SPARE
J14	SPARE
J15	SPARE
J16	SPARE
J17	SPARE

RESET LINK FANOUT

BLDG # 911B
RACK # R 5035
FANOUT # FANOUT V

FROM SHEET 43
ASSY # DD9-E2442-5

OUTPUT

J2	R 5035B ACS F/O A DATA IN 1 SWIC A/D SLOT 1
J3	R 5035A ACS F/O A DATA IN TRAILER SLOT 2
J4	R 5035A ACS F/O A DATA IN 1 ULINE SLOT 3
J5	R 5035C ACS F/O C DATA IN 1 D18 SLOT 8
J6	R 5035A ACS F/O A DATA IN 2 SLOT4
J7	R 5035C ACS F/O C DATA IN 2 SLOT 7
J8	R 5035C ACS F/O C DATA IN 1 SLOT 5
J9	MASTER RESET TO 929
J10	SPARE
J11	R 5035A ACS F/O A DATA IN 2 SLOT 5
J12	R 5466 CST.911B.AGS_EVLNK V108 SLOT 3
J13	R 5035 ACS F/O A, SLOT 8 CH1 A18
J14	R 5034 F/O SLT2 TTL CH2A SLOT 2
J15	SPARE
J16	SPARE
J17	R 5035C ACS F/O C DATA IN 2 SLOT 1 HITL-2

RESET LINK FANOUT

BLDG # 911B
RACK # R 5323
FANOUT # ?

FROM SHEET 43
ASSY # DD9-E2442-5

OUTPUT

J2	To x REF SHEET x
J3	To x REF SHEET x
J4	To x REF SHEET x
J5	To x REF SHEET x
J6	To x REF SHEET x
J7	To x REF SHEET x
J8	To x REF SHEET x
J9	To x REF SHEET x
J10	To x REF SHEET x
J11	To x REF SHEET x
J12	To x REF SHEET x
J13	To x REF SHEET x
J14	To x REF SHEET x
J15	To x REF SHEET x
J16	To x REF SHEET x
J17	To x REF SHEET x

-3	-2	-1	REF DESIGNATION	ECN NO.	DESCRIPTION	MFG. DRG. REVISN. NO.
ANY ROWS						

INTERPRET IN GENERAL ACCORDANCE WITH ASME Y14.24M-1989
UNLESS OTHERWISE SPECIFIED DIMENSIONS ARE IN INCHES
DECIMAL TOLERANCES
.X ± .030
.XX ± .015
.XXX ± .005
ANGULAR TOLERANCE ± .5°

OUTSTANDING ECN

NA
FINISH

BREAK SHARP EDGES
MAX. XX MIN. XX

Q.A. CATEGORY A-3

DRAWN BY	Steve Lanski	10/18/2004
CHECKED BY		
DESIGN APPROVAL		
ENGINEER APPROVAL		
SUPVR. APPROVAL		

NEXT ASSEMBLY

BROOKHAVEN NATIONAL LABORATORY
UPTON, N.Y. 11973

RHIC CONTROLS WIRING DIAGRAM
BLD. 911B
RESET LINK FANOUT MODULES

SIZE D
RESET_FANOUTS
DRAWING NUMBER
REV. A

MATERIAL: ——— SCALE: FULL WEIGHT: – SHEET 43A

*AUTOCAD

REV.	ZONE	ECN NO.	DATE	BY	CKR	APP.

Bill Venegas, BNL 5/16/2003 10:46 AM v112_evMons_res.dwg

AGS EVENT LINK

BLDG #: 911B
RACK #: 5322
CHASSIS ID: CFE-911-RES
SLOT #: 06
A24 BASE ADDRESS: 0X540000

TO: RK5035 FANOUT T J8

RHIC EVENT LINK

BLDG #: 911B
RACK #: 5322
CHASSIS ID: CFE-911-RES
SLOT #: 07
A24 BASE ADDRESS: 0X580000

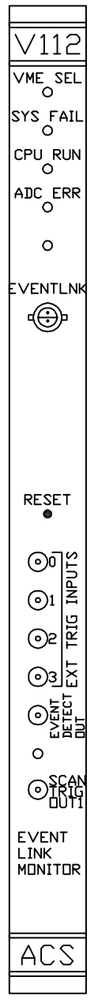

TO: RK5322 FANOUT A J3

BOOSTER EVENT LINK

BLDG #: 911B
RACK #: 5322
CHASSIS ID: CFE-911-RES
SLOT #: 08
A24 BASE ADDRESS: 5C0000

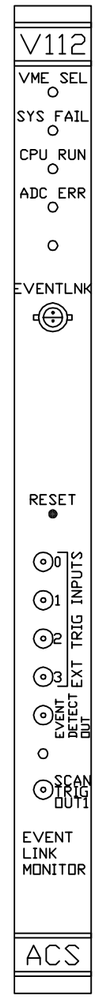

TO RK 3370 FANOUT A J17

-3	-2	-1	REF DESIGNATOR	ITEM NO.	DESCRIPTION	MAT'L DWG NO./PRL NO.
QTY REQD						

INTERPRET IN GENERAL ACCORDANCE WITH ASME Y14.24M-1989
UNLESS OTHERWISE SPECIFIED DIMENSIONS ARE IN INCHES
DECIMAL TOLERANCES .X ±.030 .XX ±.015 .XXX ±.005
ANGULAR TOLERANCE ± .5°
FINISH: NA
BREAK SHARP EDGES MAX. XX MIN. XX
OUTSTANDING ECN
NEXT ASSEMBLY

Q.A. CATEGORY A-3		DATE
DRAWN BY	Venegas	5/16/03
CHECKED BY		
DESIGN APPROVAL		
ENGINEER APPROVAL		
SUPVR. APPROVAL		

BROOKHAVEN NATIONAL LABORATORY
UPTON, N.Y. 11973
C-AD CONTROLS WIRING DIAGRAM
VME CHASSIS CFE-911-RES
V112 EVENT LINK MONITORS

SIZE D | DRAWING NUMBER | REV. A
MATERIAL: ——— | SCALE: NA | WEIGHT: – | SHEET 44

*AUTOCAD