REV.	ZONE	ECN NO.	DATE	BY	CKR	APP.

CONTROLS-4/5/01 3:25 PM D09-E-RD2826.dwg

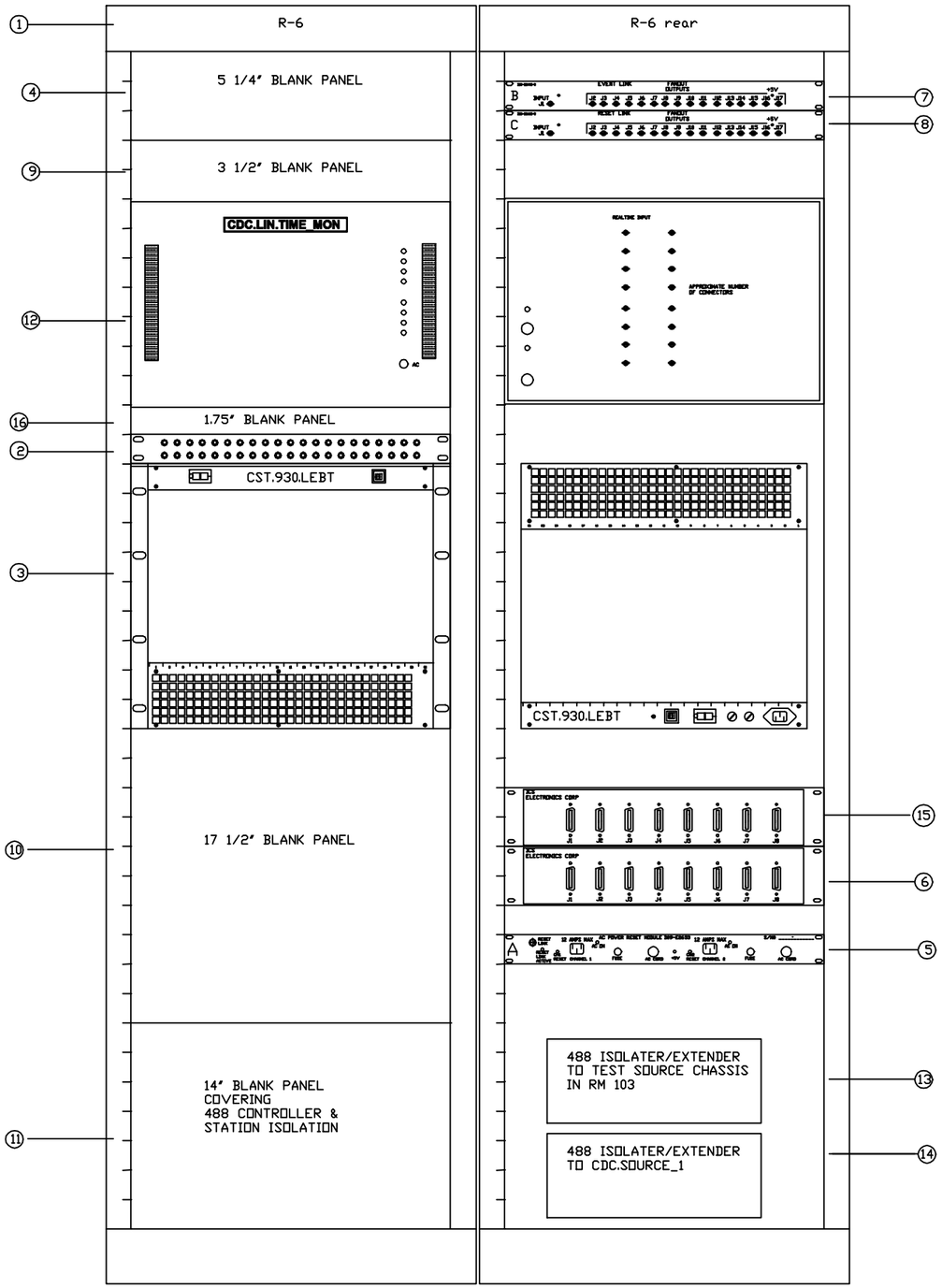

CONTROLLER LIST
CDC.SOURCE_1
CDC.LEBT.INS
CDC.LEBT.RFQII
CDC.LEBT.PREINJECT
CDC.LIN.RF_CHOP
TEST SOURCE CHASSIS IN RM 103

-3	-2	-1	REF DESIGNATOR	ITEM NO.	DESCRIPTION	MAT'L DWG NO.,BNL NO.
		1	16	13	1 3/4" BLANK PANEL	
		1	10	12	17 1/2" BLANK PANEL	
		2	13, 14	11	488 ISOLATER/EXTENDER	
		1	12	10	LINAC TLM	
		1	11	9	14" BLANK PANEL	
		1	9	8	3 1/2" BLANK PANEL	
		2	7,8	7	EVENT/RESET LINK FANOUT	
		2	6,15	6	488 FANOUT MODULE	
		1	5	5	AC RESET MODULE	
		1	4	4	5 1/4 BLANK PANEL	
		1	3	3	6U VME CHASSIS CST.930.LEBT	
		1	2	2	GROMMET PANEL	
		1	1	1	70" RACK	

QTY REQD

INTERPRET IN GENERAL ACCORDANCE WITH ASME Y14.24M-1989

UNLESS OTHERWISE SPECIFIED DIMENSIONS ARE IN INCHES
DECIMAL TOLERANCES
.X ±.030
.XX ±.015
.XXX ±.005
ANGULAR TOLERANCE
± .5°

OUTSTANDING ECN

NA FINISH

BREAK SHARP EDGES
MAX. XX MIN. XX

Q.A. CATEGORY A-3

		DATE
DRAWN BY	JAPPE	2/4/2000
CHECKED BY		
DESIGN APPROVAL		
ENGINEER APPROVAL		
SUPVR. APPROVAL		

NEXT ASSEMBLY

BROOKHAVEN NATIONAL LABORATORY
UPTON, N.Y. 11973
CA Division
LEBT Rack Layout
CST.930.LEBT

SIZE A
D09-E-RD2826
DRAWING NUMBER
REV. A

MATERIAL: ——— SCALE: FULL WEIGHT: – SHEET 1

*AUTOCAD

REV.	ZONE	ECN NO.	DATE	BY	CKR	APP.

BNL, BNL 12/28/00 11:47 AM D09-E-RD2827.dwg

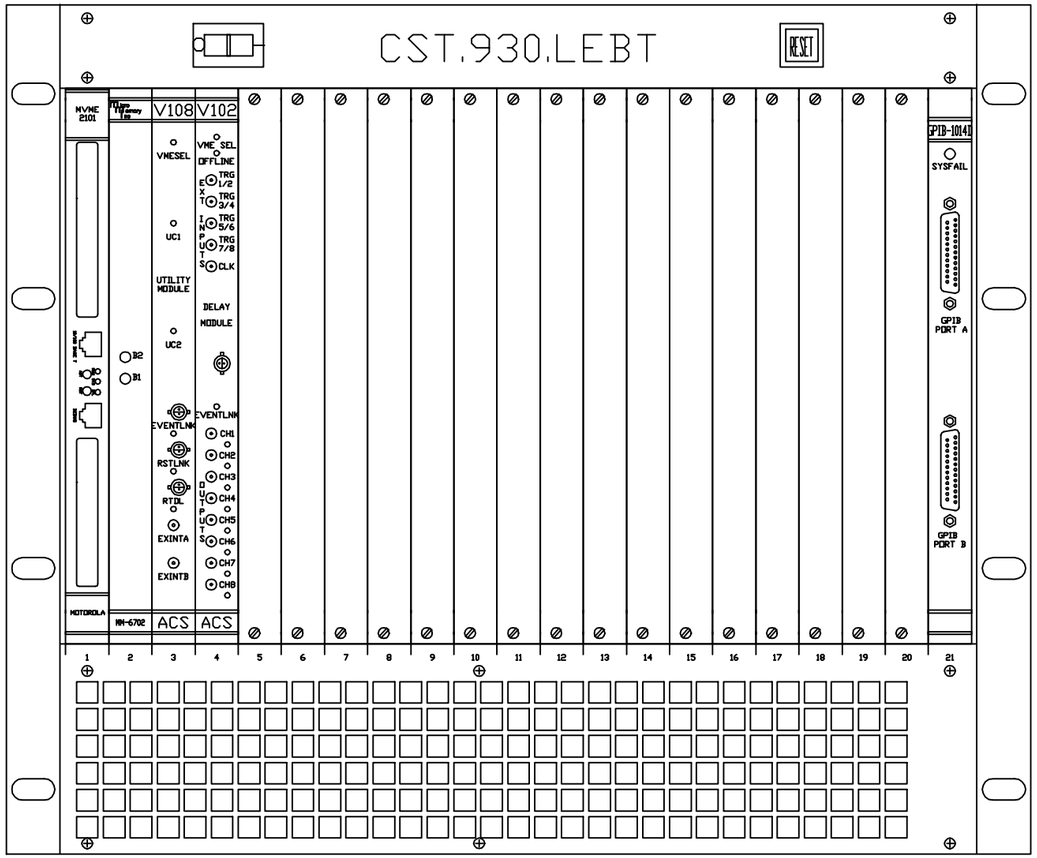

FRONT VIEW

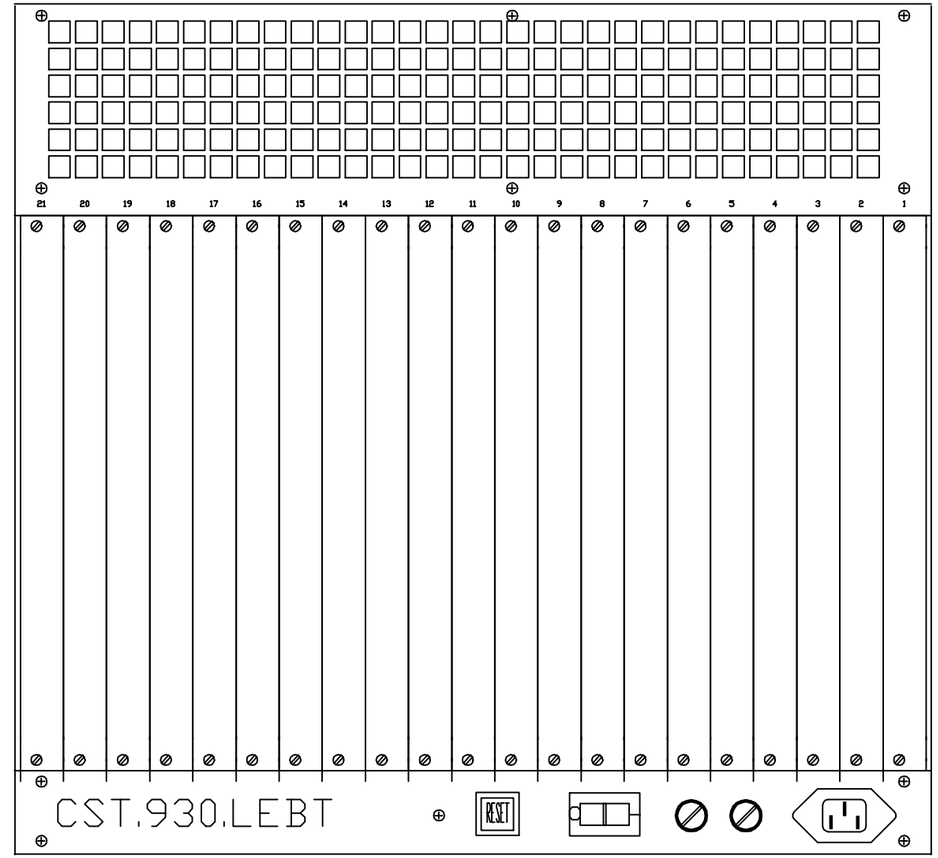

REAR VIEW

NOTE:

1. ALL UNUSED SLOTS, FRONT AND REAR

-3	-2	-1	REF DESIGNATOR	ITEM NO.	DESCRIPTION	MAT'L DWG NO.,BNL NO.
		-	-	-	-	-
		1	SLOT 21	6	ALLEN BRADLEY 1014D 488 GPIB CONTRLLER	-
		1	SLOT 4	5	V102 DELAY MODULES	94028072
		1	SLOT 3	4	V108 UTILITY MODULE	94028094
		1	SLOT 2	3	MEMORY BOARD	MM-6702
		1	SLOT 1	2	FRONT END COMPUTER	POWER3E
		1	N/A	1	VME CHASSIS	RHIC-93008000

QTY REQD

INTERPRET IN GENERAL ACCORDANCE WITH ASME Y14.24M-1989

UNLESS OTHERWISE SPECIFIED DIMENSIONS ARE IN INCHES

DECIMAL TOLERANCES
.X ±.030
.XX ±.015
.XXX ±.005
ANGULAR TOLERANCE
± .5°

OUTSTANDING ECN

NA FINISH

BREAK SHARP EDGES
MAX. XX MIN. XX

Q.A. CATEGORY A-3

		DATE
DRAWN BY	Jappe	2/4/2000
CHECKED BY		
DESIGN APPROVAL		
ENGINEER APPROVAL		
SUPVR. APPROVAL		

NEXT ASSEMBLY

BROOKHAVEN NATIONAL LABORATORY
UPTON, N.Y. 11973

CAD CONTROLS

BLDG. 930 RACK R-6

VME CHASSIS CST.930.LEBT

SIZE A | DRAWING NUMBER D09-E-RD2827 | REV. A

MATERIAL: ——— SCALE: NA WEIGHT: - SHEET 2

*AUTOCAD

BNL, BNL 12/28/00 11:48 AM D09-E-RD2828.dwg

REV.	ZONE	ECN NO.	DATE	BY	CKR	APP.

FRONT END COMPUTER
BLDG #: 930
RACK #: R-6
CHASSIS ID: CST.930.LEBT
SLOT#: 1
FEC NAME: CST.930.LEBT

DEVICE: MM-6702 MEMORY MODULE
BLDG #: 930
RACK #: R-6
CHASSIS ID: CST.930.LEBT
SLOT #: 2
A24 BASE ADDRESS: XXX

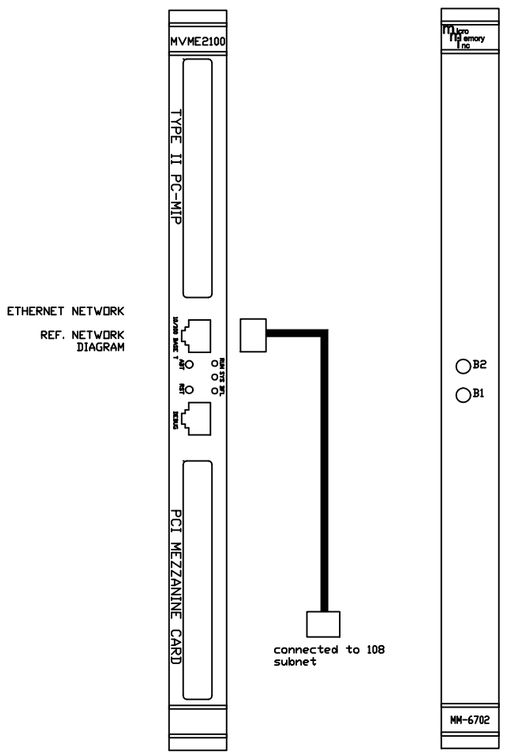

JUMPER LIST
1. REMOVE E1.
2. INSTALL E15.
3. SW3 CLOSE ALL POSITIONS.
4. SW2 CLOSE POSITIONS 7 AND 8.
5. SW1 CLOSE POSITIONS 2-8.
6. INSTALL E14 AND E25 TO ENABLE BATTERIES

DEVICE: V108 UTILITY MODULE
BLDG #: 930
RACK #: R-6
CHASSIS ID: CST.930.LEBT
SLOT #: 3
A24 BASE ADDRESS: 0XF0004000

JUMPER LIST

E25 through E50 are configured for remote reset address at the time of board acceptance test.
DO NOT MODIFY!

Remote reset pulls VME SYS Reset.
E58-E60, E59-E61

A24 BASE ADDRESS= 4000h
E57-E13, E2-E14, E3-E15, E4-E16, E5-E17, E6-E18
E7-E19, E8-E20, E9-E21, E10-E22, E11-E24, E57-E23
SW1=OPEN
SW2=CLOSED
SW3=OPEN
SW4=OPEN

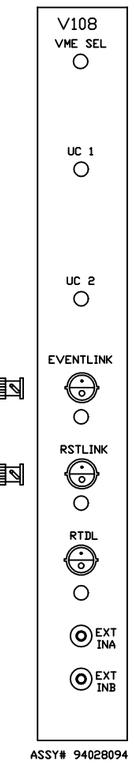

EVENT LINK
BLDG #: 930
RACK #: R-6
FANOUT #: B

RESET LINK
BLDG #: 930
RACK #: R-6
FANOUT #: C

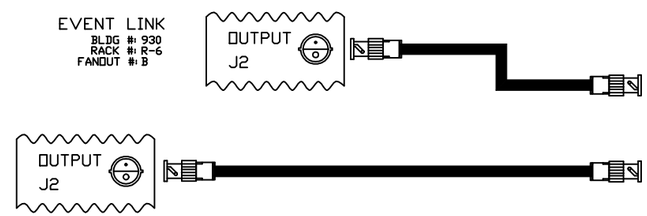

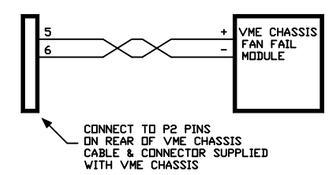

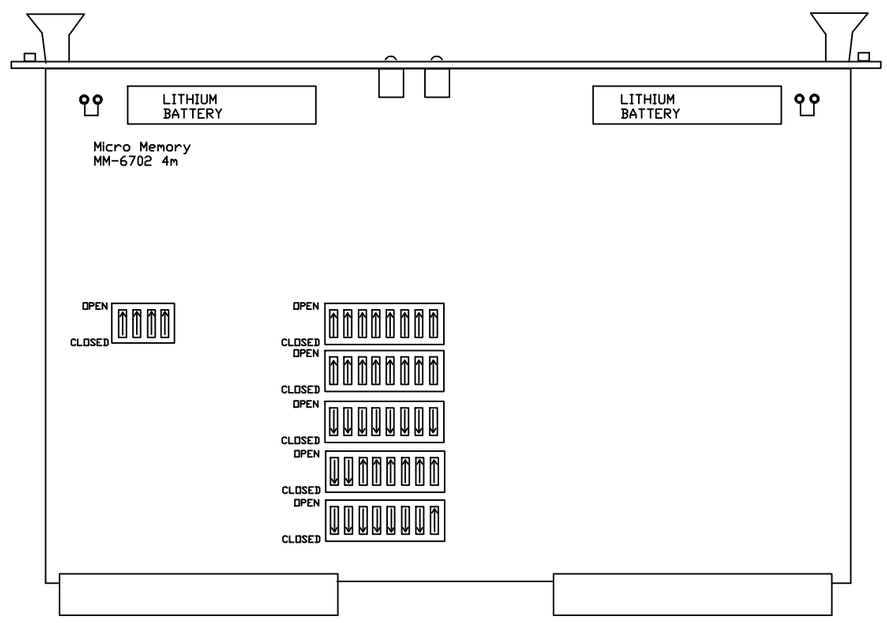

TO SET UP BOOT PARAMS FOR THE FEC
ON A X-TERM RUN StartUp
Top of StartUp

go to diagnostics
then Servers
then AGS VME stations
then pick a station you want the params for
then fec diagnostics
then Show Boot Params (PPC) (power PC)

-3	-2	-1	REF DESIGNATOR	ITEM NO.	DESCRIPTION	MAT'L DWG NO.,BNL NO.
QTY REQD						

INTERPRET IN GENERAL ACCORDANCE WITH ASME Y14.24M-1989
UNLESS OTHERWISE SPECIFIED DIMENSIONS ARE IN INCHES
DECIMAL TOLERANCES .X ±XXX .XX ±XXX .XXX ±XXX
ANGULAR TOLERANCE ± XXX
NA FINISH
BREAK SHARP EDGES MAX. XX MIN. XX
OUTSTANDING ECN

Q.A. CATEGORY A-3
DRAWN BY Jappe DATE 2/4/2000
CHECKED BY
DESIGN APPROVAL
ENGINEER APPROVAL
SUPVR. APPROVAL
NEXT ASSEMBLY

BROOKHAVEN NATIONAL LABORATORY
ASSOCIATED UNIVERSITIES, INC.
UPTON, N.Y. 11973

CAD WIRING DIAGRAM
LEBT VME CHASSIS CST.930.LEBT
CPU/MEMORY/V108 UTIL MODULE

SIZE A | DRAWING NUMBER D09-E-RD2828 | REV. A
MATERIAL: ——— SCALE: NA WEIGHT: – SHEET 3

*AUTOCAD

REV.	ZONE	ECN NO.	DATE	BY	CKR	APP.

BNL, BNL 12/28/00 11:49 AM D09-E-RD2829.dwg

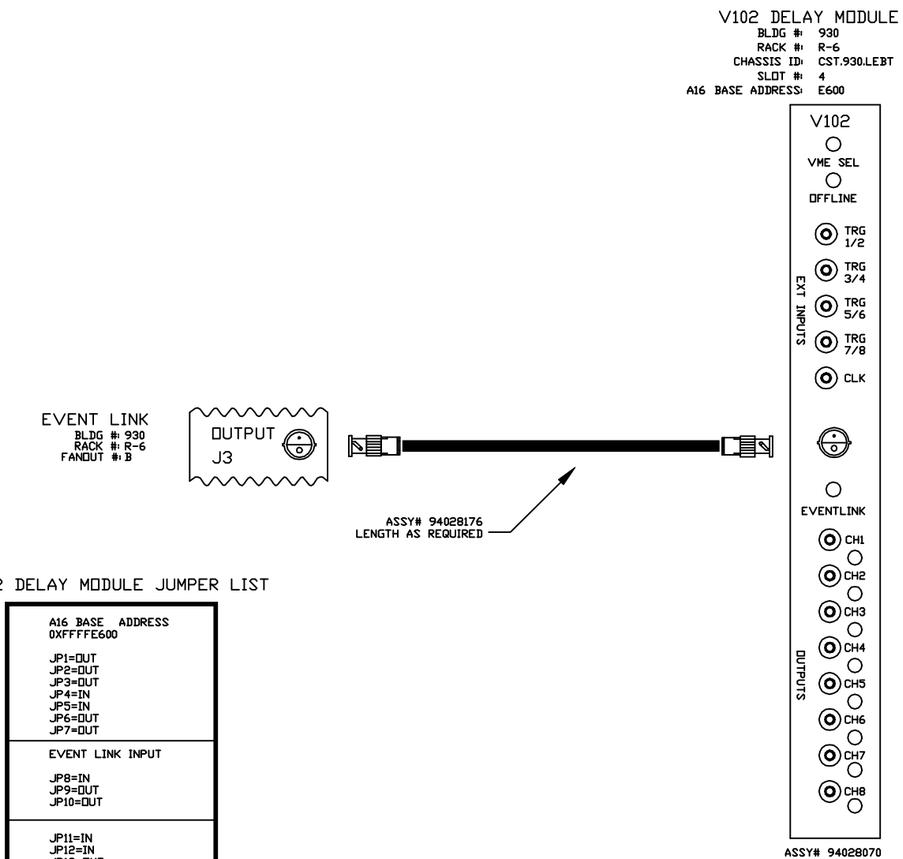

V102 DELAY MODULE JUMPER LIST

A16 BASE ADDRESS 0XFFFFE600 JP1=OUT JP2=OUT JP3=OUT JP4=IN JP5=IN JP6=OUT JP7=OUT
EVENT LINK INPUT JP8=IN JP9=OUT JP10=OUT
JP11=IN JP12=IN JP13=OUT JP14=IN

-3	-2	-1	REF DESIGNATOR	ITEM NO.	DESCRIPTION	MAT'L DWG NO.,BNL NO.
QTY REQD						

INTERPRET IN GENERAL ACCORDANCE WITH ASME Y14.24M-1989

UNLESS OTHERWISE SPECIFIED DIMENSIONS ARE IN INCHES

DECIMAL TOLERANCES
.X ±XXX
.XX ±XXX
.XXX ±XXX
ANGULAR TOLERANCE
± XXX

OUTSTANDING ECN

NA FINISH

BREAK SHARP EDGES
MAX. XX MIN. XX

Q.A. CATEGORY A-3		DATE
DRAWN BY	Warren Jappe	2/4/2000
CHECKED BY		
DESIGN APPROVAL		
ENGINEER APPROVAL		
SUPVR. APPROVAL		

NEXT ASSEMBLY

BROOKHAVEN NATIONAL LABORATORY
UPTON, N.Y. 11973

CAD WIRING DIAGRAM

BLDG.LEBT CHASSIS CST.930.LEBT

V102 DELAY MODULE

SIZE A | D09-E-RD2829 | REV. A

DRAWING NUMBER

MATERIAL: ——— SCALE: NA WEIGHT: SHEET 4

*AUTOCAD

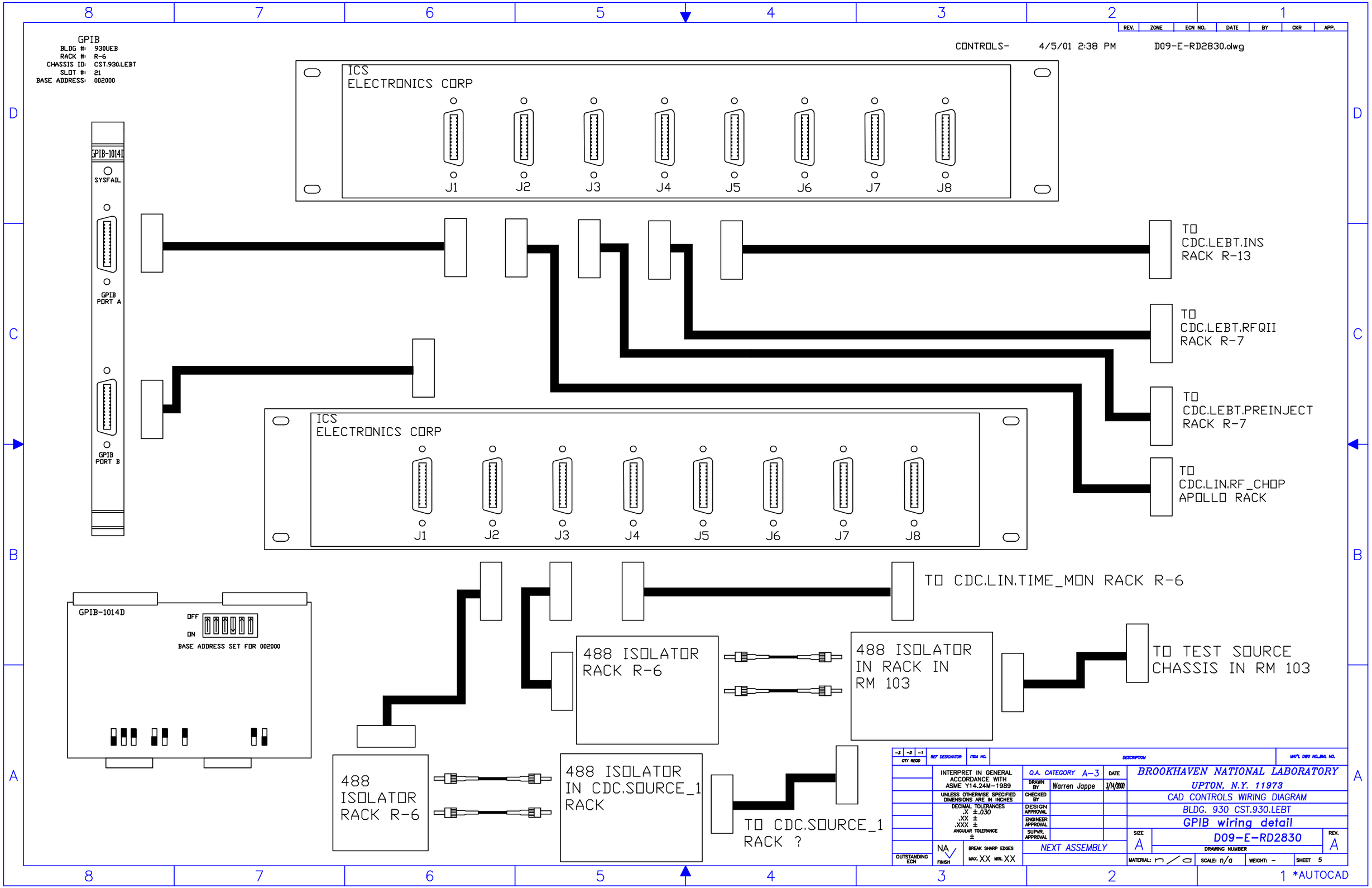
GPIB
BLDG #: 930UEB
RACK #: R-6
CHASSIS ID: CST.930.LEBT
SLOT #: 21
BASE ADDRESS: 002000
CONTROLS- 4/5/01 2:38 PM D09-E-RD2830.dwg
GPIB-1014D
SYSFAIL
GPIB PORT A
GPIB PORT B
ICS ELECTRONICS CORP
J1 J2 J3 J4 J5 J6 J7 J8
TO CDC.LEBT.INS RACK R-13
TO CDC.LEBT.RFQII RACK R-7
TO CDC.LEBT.PREINJECT RACK R-7
TO CDC.LIN.RF_CHOP APOLLO RACK
TO CDC.LIN.TIME_MON RACK R-6
GPIB-1014D
OFF
ON
BASE ADDRESS SET FOR 002000
488 ISOLATOR RACK R-6
488 ISOLATOR IN RACK IN RM 103
TO TEST SOURCE CHASSIS IN RM 103
488 ISOLATOR RACK R-6
488 ISOLATOR IN CDC.SOURCE_1 RACK
TO CDC.SOURCE_1 RACK ?
INTERPRET IN GENERAL ACCORDANCE WITH ASME Y14.24M-1989
UNLESS OTHERWISE SPECIFIED DIMENSIONS ARE IN INCHES
DECIMAL TOLERANCES .X ±.030 .XX ± .XXX ±
ANGULAR TOLERANCE ±
Q.A. CATEGORY A-3
DRAWN BY Warren Jappe 3/14/2000
CHECKED BY
DESIGN APPROVAL
ENGINEER APPROVAL
SUPVR. APPROVAL
NEXT ASSEMBLY
BROOKHAVEN NATIONAL LABORATORY
UPTON, N.Y. 11973
CAD CONTROLS WIRING DIAGRAM
BLDG. 930 CST.930.LEBT
GPIB wiring detail
SIZE A
D09-E-RD2830
REV. A
DRAWING NUMBER
SCALE: n/a
WEIGHT: -
SHEET 5
*AUTOCAD

CONTROLS- 4/5/01 2:42 PM D09-E-RD2831.dwg

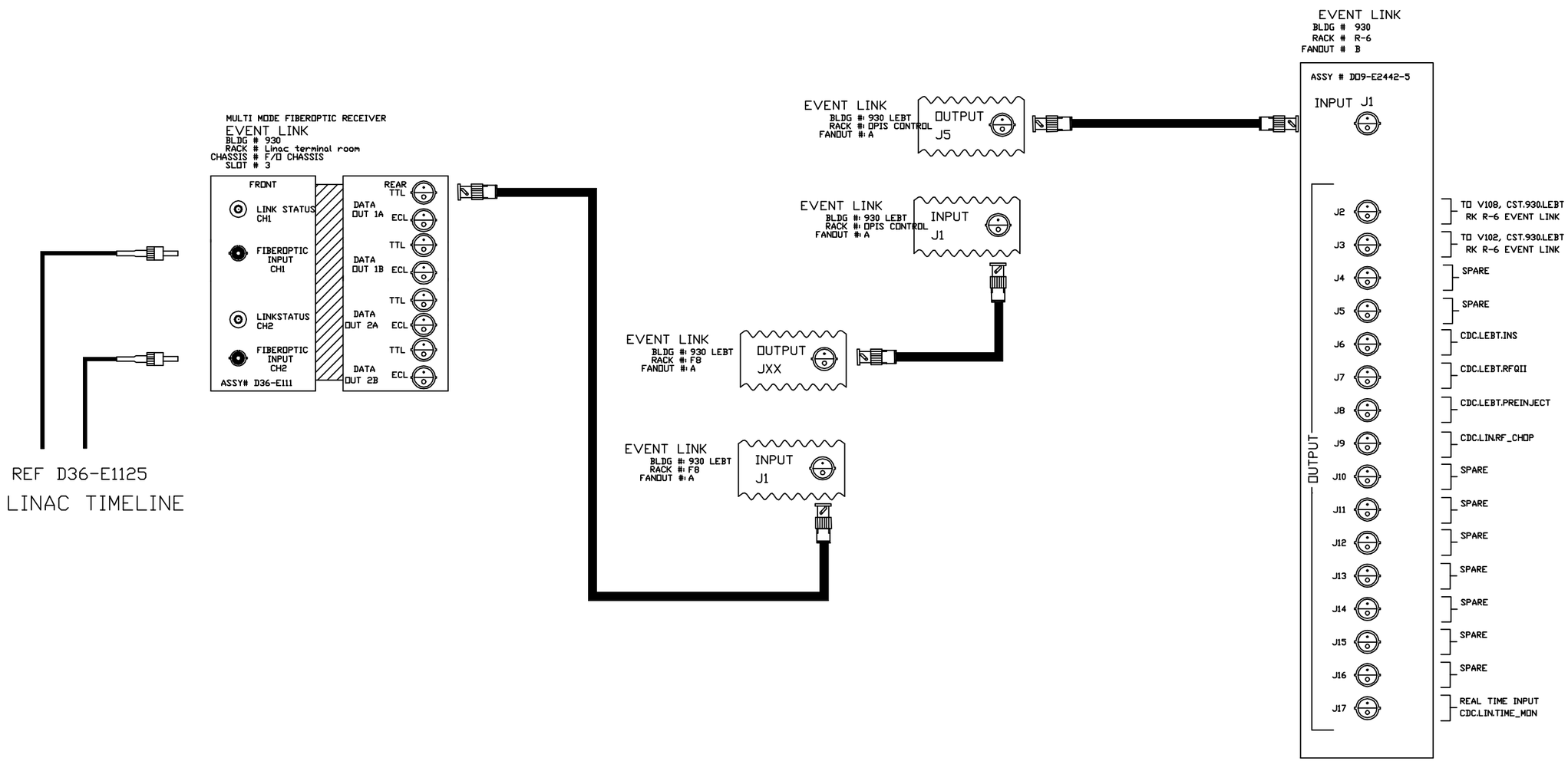

-3	-2	-1	REF DESIGNATOR	ITEM NO.	DESCRIPTION	MAT'L. DWG NO.,SPEC. NO.
QTY REQD						

INTERPRET IN GENERAL ACCORDANCE WITH ASME Y14.24M-1989

UNLESS OTHERWISE SPECIFIED DIMENSIONS ARE IN INCHES

DECIMAL TOLERANCES
.X ±.030
.XX ±.015
.XXX ±.005
ANGULAR TOLERANCE ± .5°

NA FINISH

BREAK SHARP EDGES MAX. XX MIN. XX

OUTSTANDING ECN

Q.A. CATEGORY A-3		DATE
DRAWN BY	Warren Jappe	2/14/00
CHECKED BY		
DESIGN APPROVAL		
ENGINEER APPROVAL		
SUPVR. APPROVAL		

NEXT ASSEMBLY

BROOKHAVEN NATIONAL LABORATORY
UPTON, N.Y. 11973

CAD WIRING DIAGRAM

930 CST.930.LEBT

EVENT LINK DETAIL

SIZE A | D09-E-RD2831 | REV. A

DRAWING NUMBER

MATERIAL: ——— SCALE: NA WEIGHT: – SHEET 6

*AUTOCAD

BNL, BNL 12/28/00 11:53 AM D09-E-RD2832.dwg

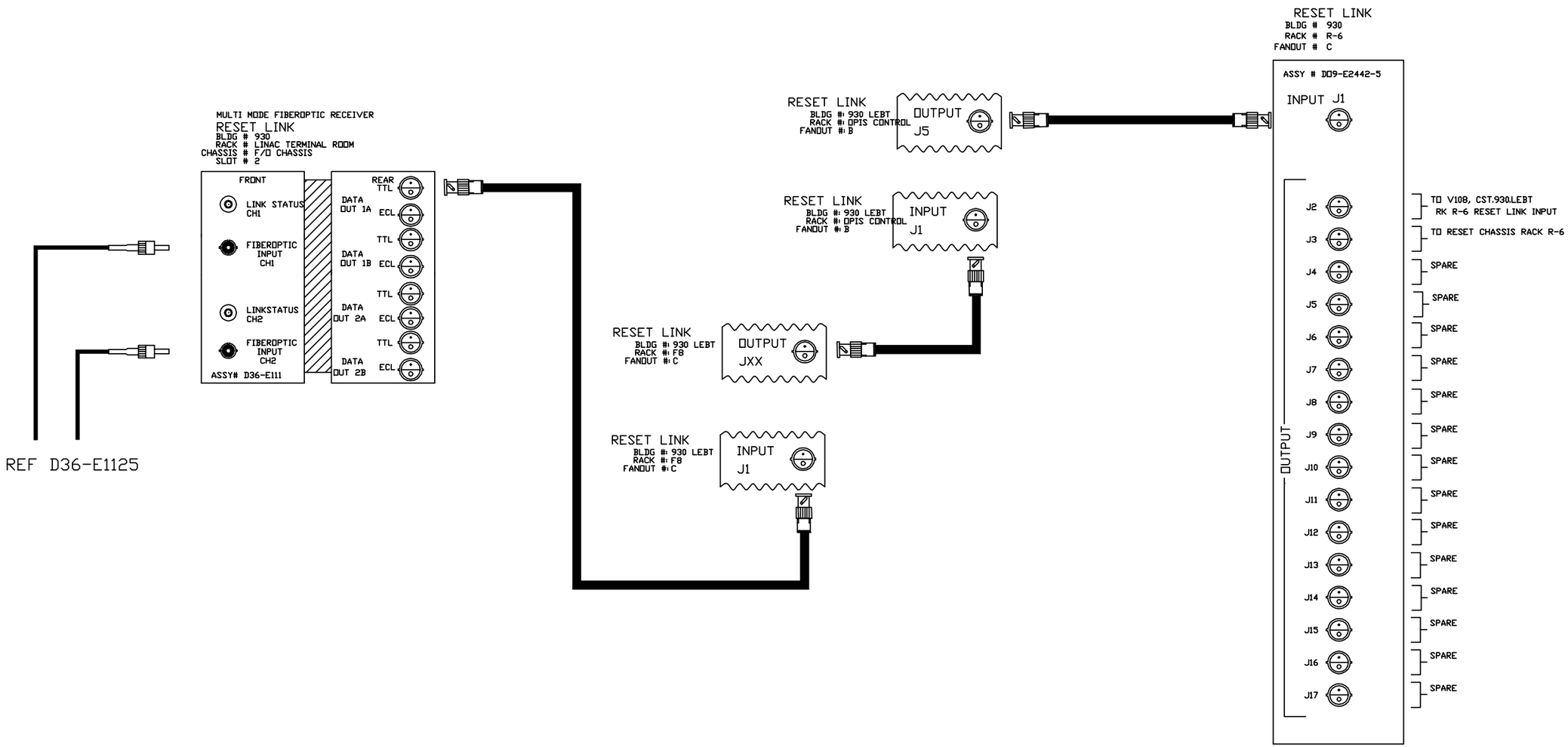

-3	-2	-1	REF DESIGNATOR	ITEM NO.	DESCRIPTION	MAT'L. DWG NO.,BNL NO.
QTY REQD						

INTERPRET IN GENERAL ACCORDANCE WITH ASME Y14.24M-1989

UNLESS OTHERWISE SPECIFIED DIMENSIONS ARE IN INCHES

DECIMAL TOLERANCES
.X ±.030
.XX ±.015
.XXX ±.005
ANGULAR TOLERANCE
± .5°

OUTSTANDING ECN

NA FINISH

BREAK SHARP EDGES
MAX. XX MIN. XX

Q.A. CATEGORY A-3		DATE
DRAWN BY	Warren Jappe	3/23/00
CHECKED BY		
DESIGN APPROVAL		
ENGINEER APPROVAL		
SUPVR. APPROVAL		

NEXT ASSEMBLY

BROOKHAVEN NATIONAL LABORATORY
UPTON, N.Y. 11973

CAD WIRING DIAGRAM

930 CST.930.LEBT

RESET LINK DETAIL

SIZE A | D09-E-RD2832 | REV. A

DRAWING NUMBER

MATERIAL: ——— SCALE: NA WEIGHT: – SHEET 7

*AUTOCAD

REV.	ZONE	ECN NO.	DATE	BY	CKR	APP.

BNL, BNL 12/28/00 11:57 AM D09-E-RD2833.dwg

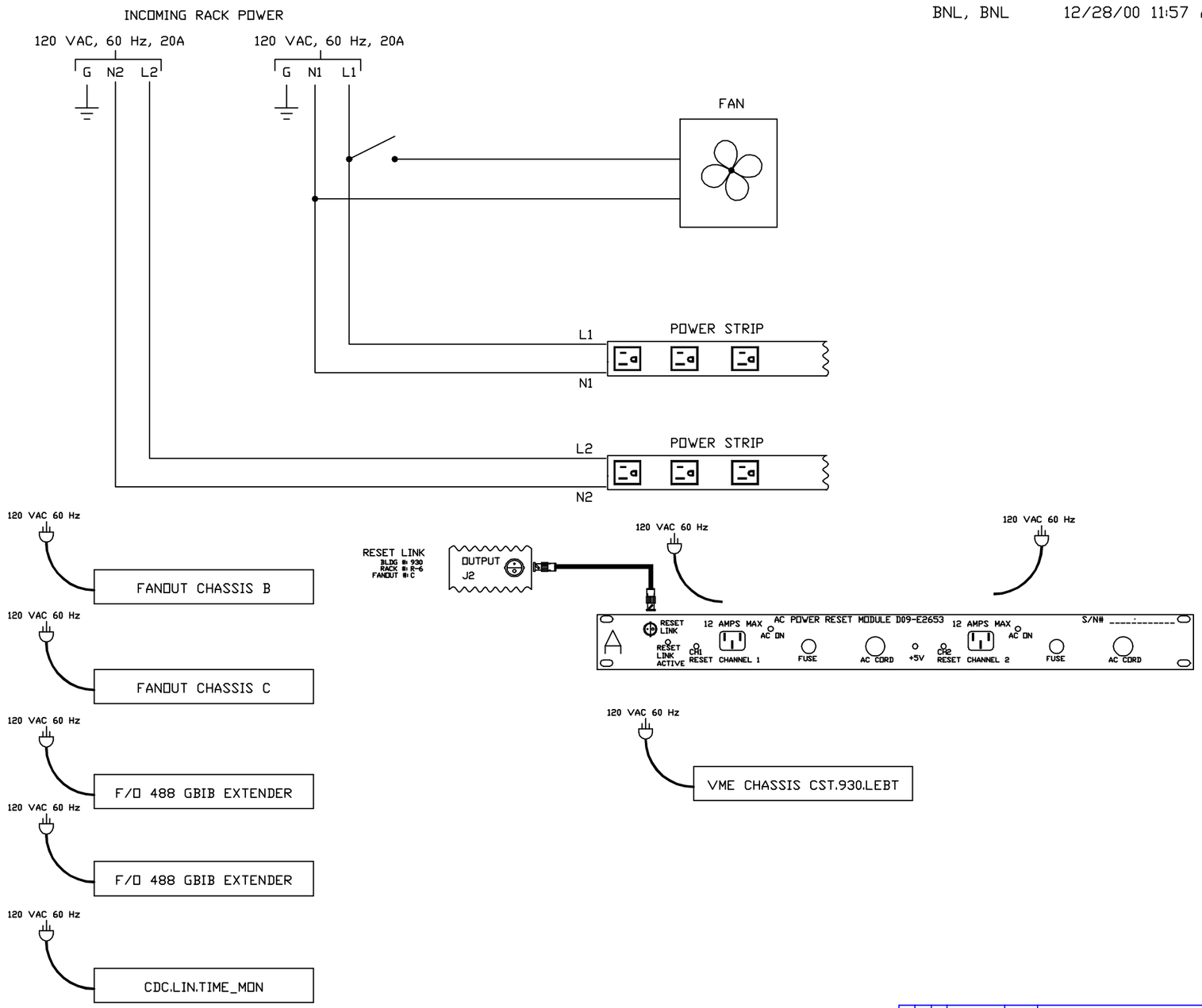

NOTE: ALL 120 VAC, 60 Hz POWER CORDS
PLUG INTO POWER STRIP OUTLETS EXCEPT FOR 6U VME CHASSIS

-3	-2	-1	REF DESIGNATOR	ITEM NO.	DESCRIPTION	MAT'L DWG NO./BNL NO.
QTY REQD						

INTERPRET IN GENERAL ACCORDANCE WITH ASME Y14.24M-1989

UNLESS OTHERWISE SPECIFIED DIMENSIONS ARE IN INCHES

DECIMAL TOLERANCES
.X ±.030
.XX ±.015
.XXX ±.005
ANGULAR TOLERANCE ± .5°

OUTSTANDING ECN

NA FINISH

BREAK SHARP EDGES MAX. XX MIN. XX

Q.A. CATEGORY A-3		DATE
DRAWN BY	Jappe	3/22/00
CHECKED BY		
DESIGN APPROVAL		
ENGINEER APPROVAL		
SUPVR. APPROVAL		

NEXT ASSEMBLY

BROOKHAVEN NATIONAL LABORATORY
ASSOCIATED UNIVERSITIES, INC.
UPTON, N.Y. 11973

CAD WIRING DIAGRAM

LEBT RACK R-6

POWER DISTRIBUTION

SIZE D09-E-RD2833 REV.

DRAWING NUMBER

MATERIAL: ——— SCALE: NA WEIGHT: SHEET 8

*AUTOCAD