BNL, BNL 12/28/00 10:25 AM D09-E-RD2810.dwg

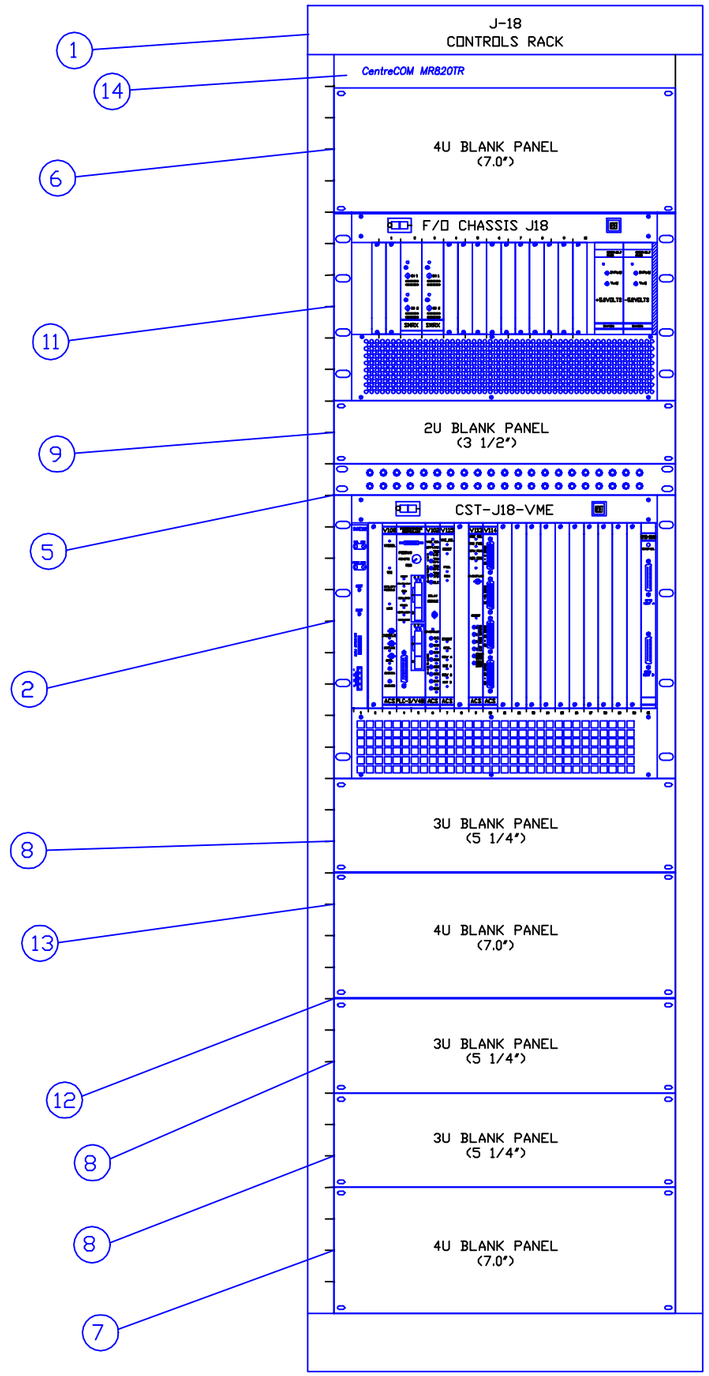

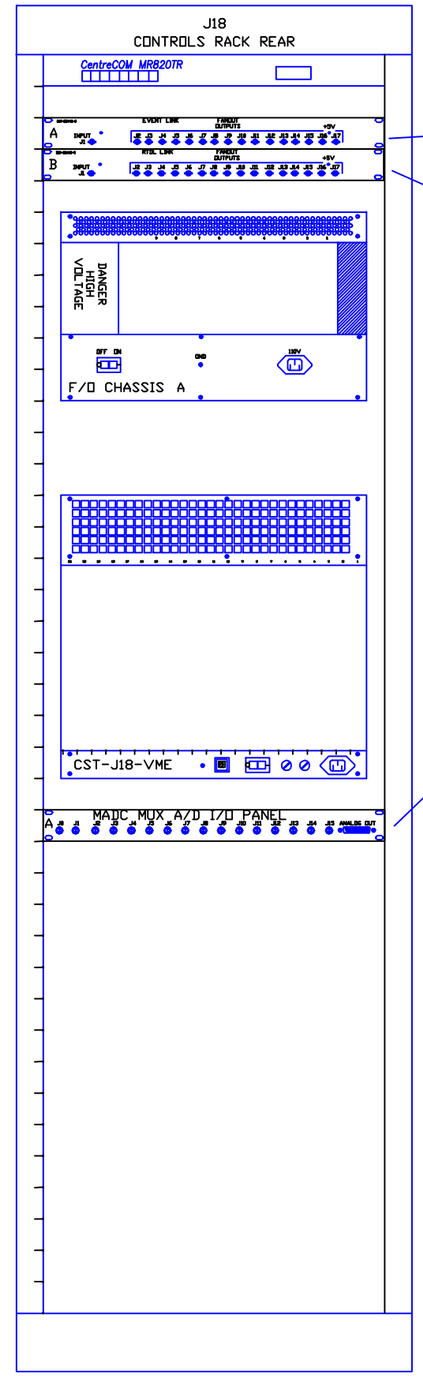

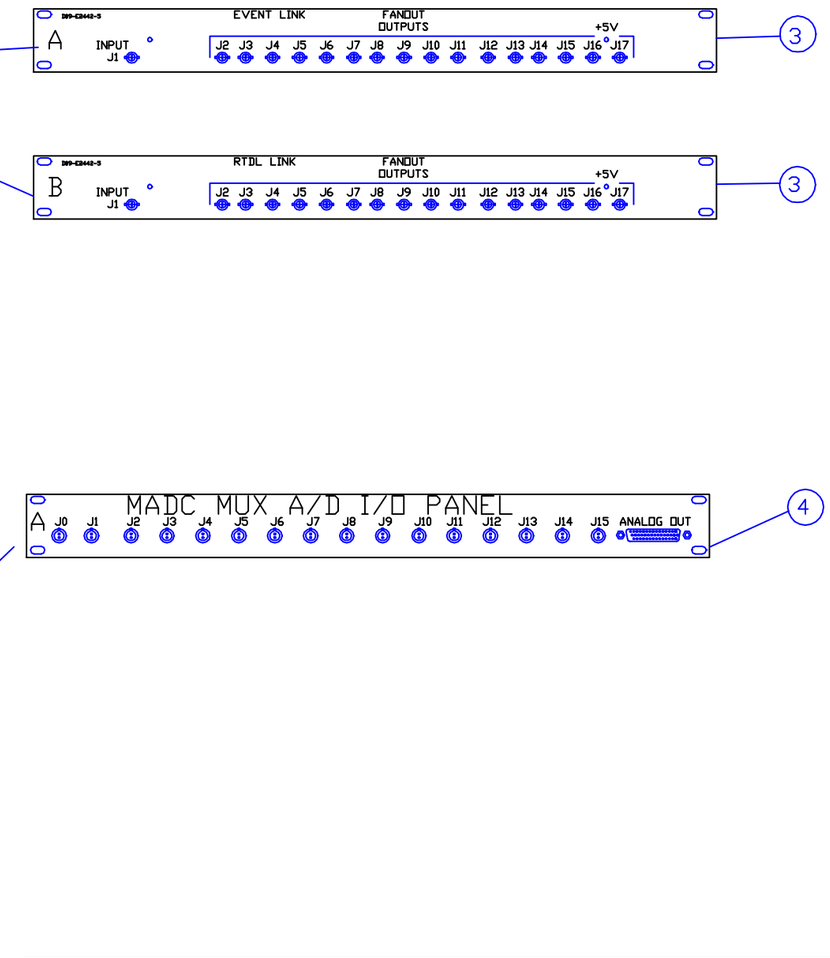

QTY REQD -3	QTY REQD -2	QTY REQD -1	REF DESIGNATOR	ITEM NO.	DESCRIPTION	MAT'L DWG NO.,BNL NO.
		1	N/A	14	CentreCOM100mb 10 mb MR820TR	N/A
		1	N/A	12	CISCO 2908 SUBNET FANOUT	N/A
		1	N/A	11	F/O CHASSIS J18	N/A
		1	N/A	10	1U BLANK PANEL (1.75")	N/A
		1	N/A	9	2U BLANK PANEL (3.5")	N/A
		3	N/A	8	3U BLANK PANEL (5.25")	N/A
		3	N/A	6,7,13	4U BLANK PANEL (7.0")	N/A
		1	N/A	5	GROMMET PANEL	N/A
		1	N/A	4	MADC A/D I/O PANEL	94028183
		2	A,B	3	TIMELINE FANOUT ASSEMBLY	D09-E2442
		1	N/A	2	VME CHASSIS CST-J18-VME	94028382
		1	N/A	1	19" RACK, 77" RACK SPACE	N/A

INTERPRET IN GENERAL ACCORDANCE WITH ASME Y14.24M-1989

UNLESS OTHERWISE SPECIFIED DIMENSIONS ARE IN INCHES

DECIMAL TOLERANCES
.X ±
.XX ±
.XXX ±
ANGULAR TOLERANCE
±

NA FINISH

BREAK SHARP EDGES
MAX. XX MIN. XX

OUTSTANDING ECN

NEXT ASSEMBLY

Q.A. CATEGORY		DATE
DRAWN BY	Vincent Wong	07/21/99
CHECKED BY		
DESIGN APPROVAL		
ENGINEER APPROVAL		
SUPVR. APPROVAL		

BROOKHAVEN NATIONAL LABORATORY
UPTON, N.Y. 11973

AGS CONTROLS

BUILDING J18

J18 RACK LAYOUT

SIZE D

DRAWING NUMBER D09-E-RD2810

REV.

MATERIAL: ——— SCALE: FULL WEIGHT: SHEET 1

*AUTOCAD

REV.	ZONE	ECN NO.	DATE	BY	CKR	APP.

BNL, BNL 12/28/00 10:26 AM D09-E-RD2811.dwg

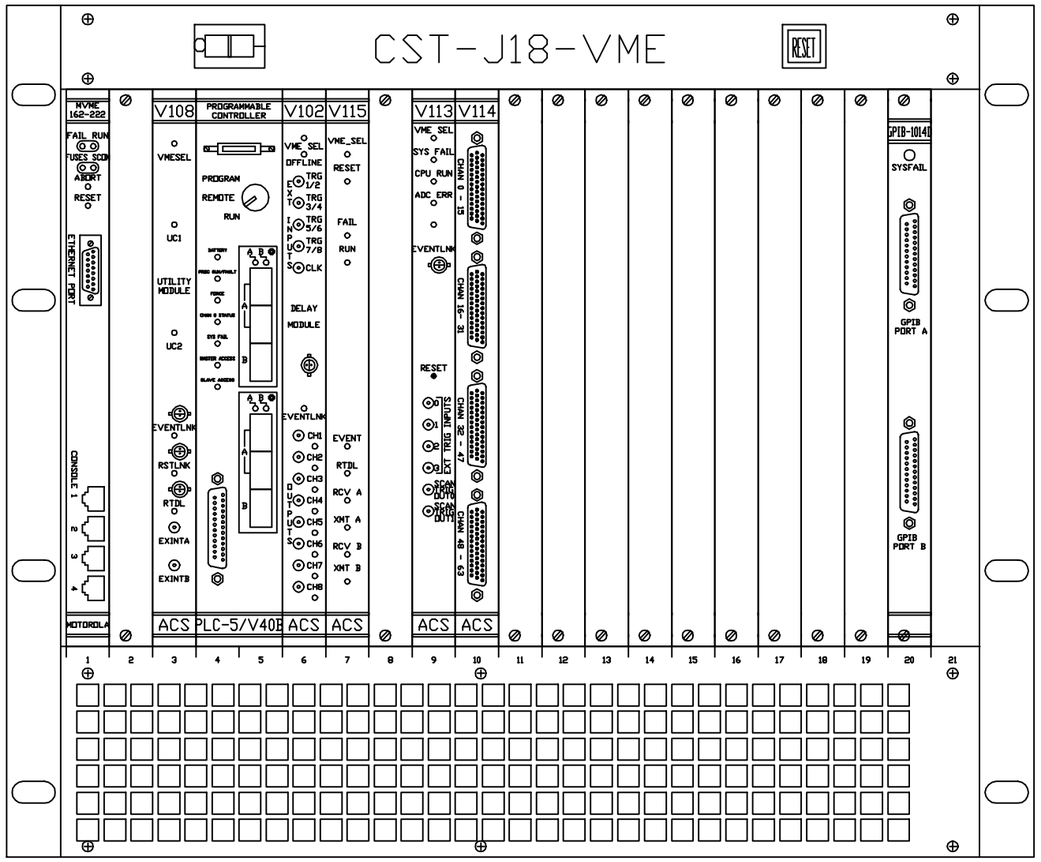

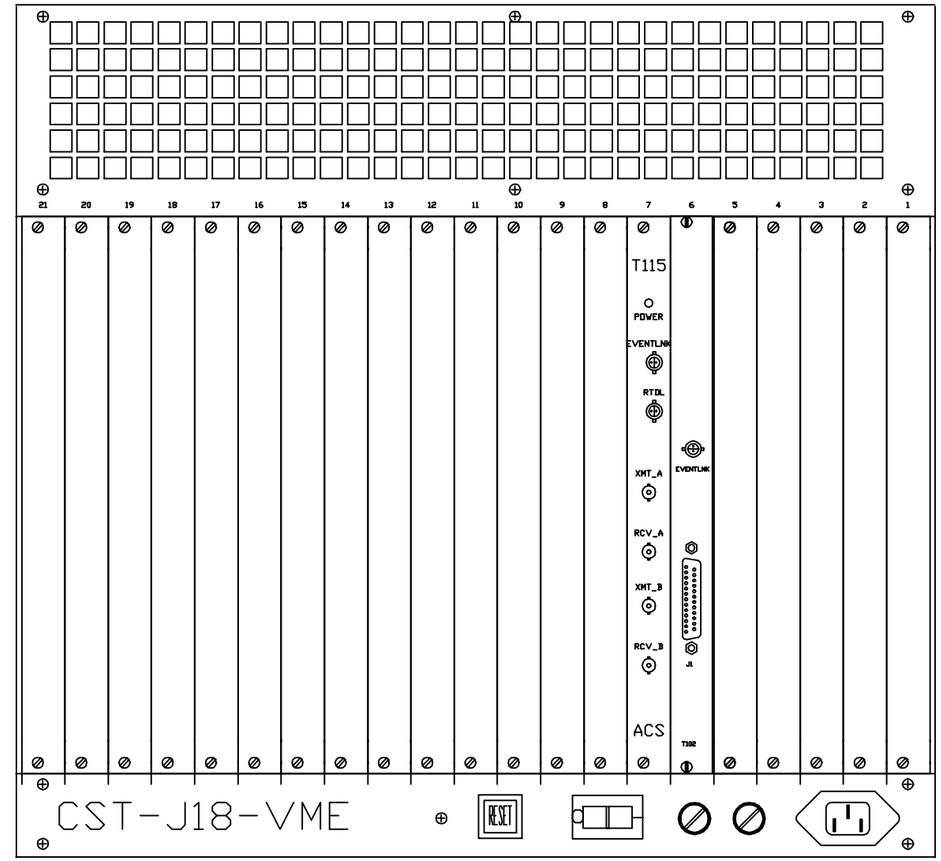

QTY REQD -3	QTY REQD -2	QTY REQD -1	REF DESIGNATOR	ITEM NO.	DESCRIPTION	MAT'L DWG NO./BNL NO.
		1	SLOT 21	11	GPIB 1014D INTERFACE	
		1	SLOT 7R	10	T115 TRANSITION MODULE	94028126
		1	SLOT 6R	9	T102 TRANSITION MODULE	D09-E2324
		1	SLOT 10	8	V114 MADC A/D CONVERTER MODULE	94028226
		1	SLOT 9	7	V113 MADC CONTROLLER BOARD	94028140
		1	SLOT 7	6	V115 WAVEFORM GENERATOR MODULE	94028108
		1	SLOT 6	5	V102 DELAY MODULE	94028072
		1	SLOT 4 & 5	4	PROGRAMMABLE CONTROLLER	PLC-5/V40B
		1	SLOT 3	3	V108 UTILITY MODULE	94028094
		1	SLOT 1	2	FRONT END COMPUTER	MVME 162-222
		1	N/A	1	VME CHASSIS	RHIC-9300800D

INTERPRET IN GENERAL ACCORDANCE WITH ASME Y14.24M-1989

UNLESS OTHERWISE SPECIFIED DIMENSIONS ARE IN INCHES

DECIMAL TOLERANCES .X ± .XX ± .XXX ± ANGULAR TOLERANCE ±

NA FINISH

BREAK SHARP EDGES MAX. XX MIN. XX

OUTSTANDING ECN

Q.A. CATEGORY		DATE
DRAWN BY	W. Jappe	6/27/00
CHECKED BY		
DESIGN APPROVAL		
ENGINEER APPROVAL		
SUPVR. APPROVAL		

NEXT ASSEMBLY

BROOKHAVEN NATIONAL LABORATORY
UPTON, N.Y. 11973

AGS CONTROLS

J18 RACK

VME CHASSIS CST-J18-VME

SIZE D | DRAWING NUMBER D09-E-RD2811 | REV.

MATERIAL: ——— SCALE: FULL WEIGHT: SHEET 2

*AUTOCAD

REV.	ZONE	ECN NO.	DATE	BY	CKR	APP.

BNL, BNL 12/28/00 10:27 AM D09-E-RD2812.dwg

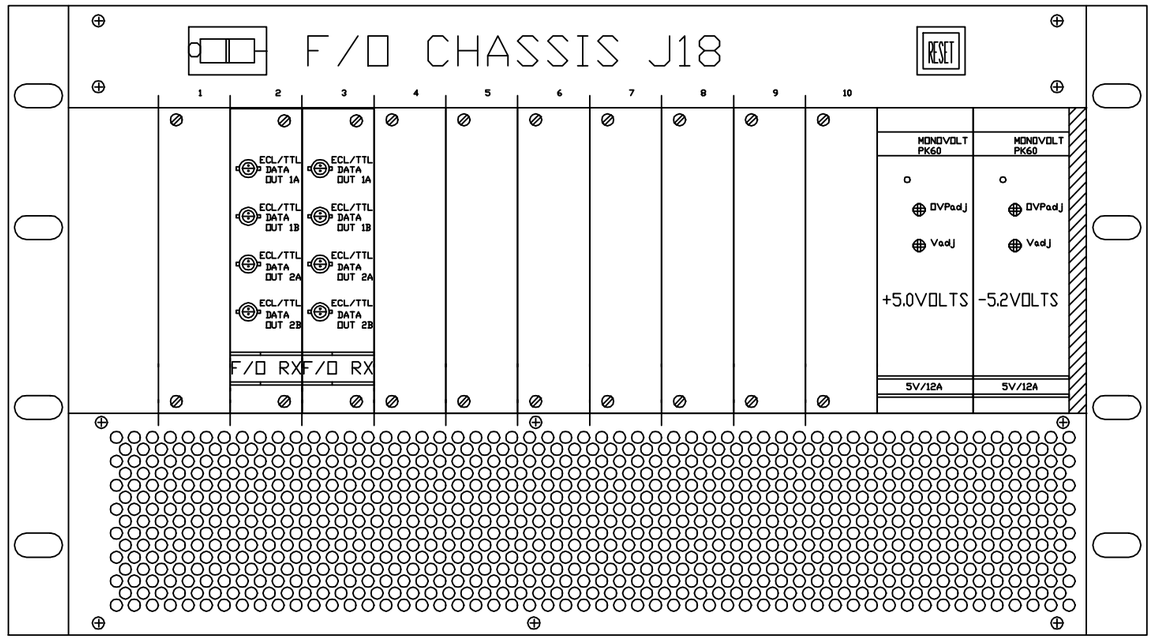

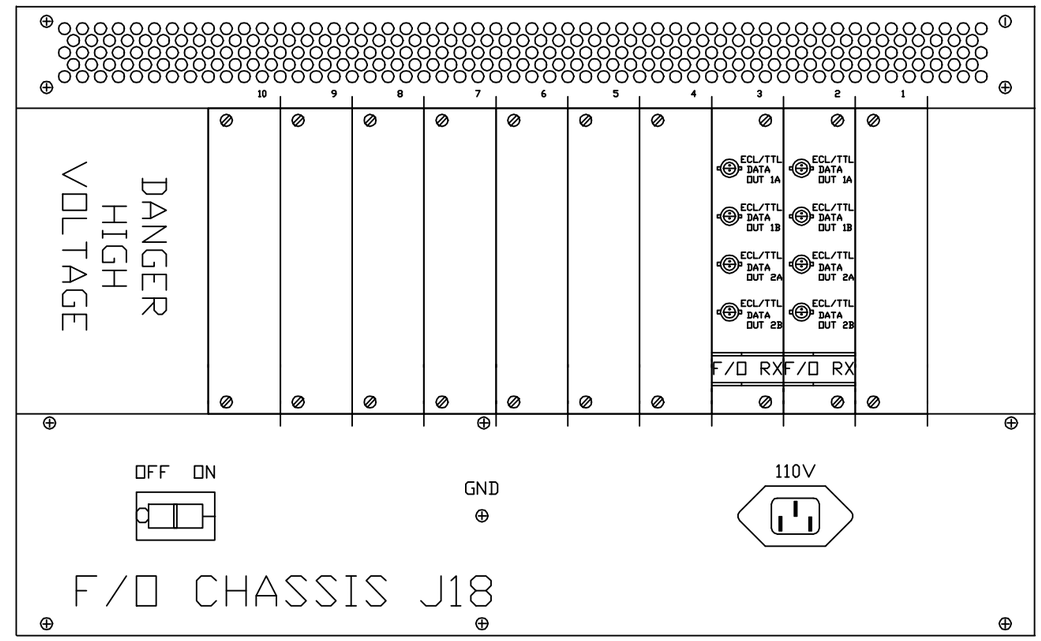

QTY REQD -3	QTY REQD -2	QTY REQD -1	REF DESIGNATOR	ITEM NO.	DESCRIPTION	MAT'L DWG NO.,BNL NO.
				7		
				6		
				5		
				4		
		2	SLOT 2&3R	3	F/O RX TRANSITION MODULE	D09-E2493-3
		2	SLOT 2&3	2	RHIC SINGLE MODE RECEIVER MODULE	94028099
		1	SLOT N/A	1	F/O CHASSIS	X

INTERPRET IN GENERAL ACCORDANCE WITH ASME Y14.24M-1989

UNLESS OTHERWISE SPECIFIED DIMENSIONS ARE IN INCHES

DECIMAL TOLERANCES
.X ±
.XX ±
.XXX ±
ANGULAR TOLERANCE
±

OUTSTANDING ECN

NA FINISH

BREAK SHARP EDGES
MAX. XX MIN. XX

Q.A. CATEGORY

		DATE
DRAWN BY	W. Jappe	6/27/00
CHECKED BY		
DESIGN APPROVAL		
ENGINEER APPROVAL		
SUPVR. APPROVAL		

NEXT ASSEMBLY

BROOKHAVEN NATIONAL LABORATORY
UPTON, N.Y. 11973

AGS CONTROLS

J18 RACK

F/O CHASSIS_J18

SIZE D

DRAWING NUMBER D09-E-RD2812

REV.

MATERIAL: ——— SCALE: FULL WEIGHT: SHEET 3

*AUTOCAD

DEVICE: GPIB
BLDG #: J18
RACK #: XXXX
CHASSIS ID: CST.J18.VME
SLOT #: 21
A24 BASE ADDRESS: 002000

BNL, BNL 12/28/00 11:13 AM D09-E-RD2818.dwg

REV.	ZONE	ECN NO.	DATE	BY	CKR	APP.

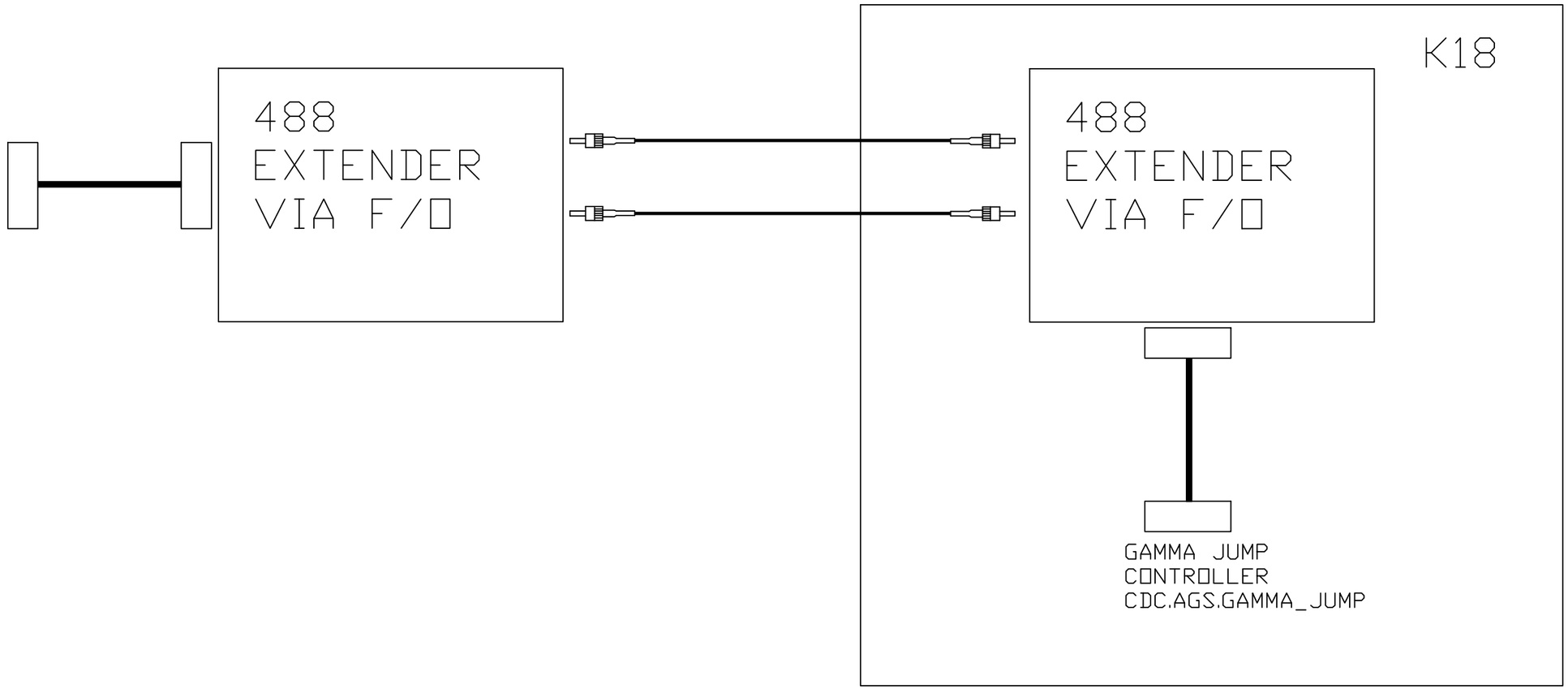

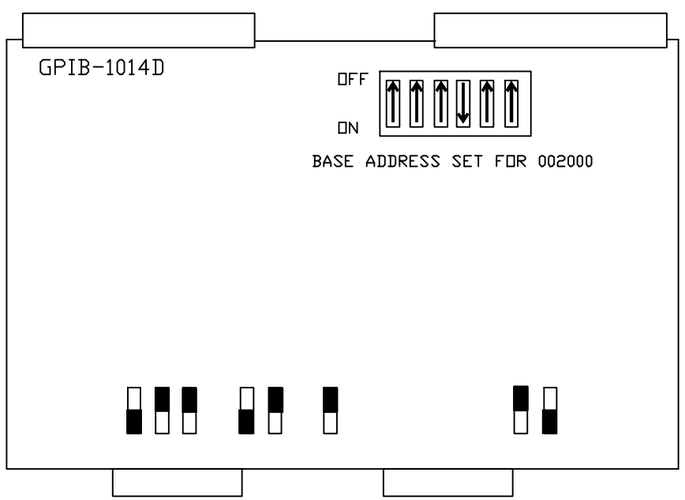

-3	-2	-1	REF DESIGNATOR	ITEM NO.	DESCRIPTION	MAT'L. DWG NO.,SPEC. NO.
QTY REQD						

INTERPRET IN GENERAL ACCORDANCE WITH ASME Y14.24M-1989

UNLESS OTHERWISE SPECIFIED DIMENSIONS ARE IN INCHES
DECIMAL TOLERANCES
.X ±XXX
.XX ±XXX
.XXX ±XXX
ANGULAR TOLERANCE ± XXX

OUTSTANDING ECN

NA FINISH

BREAK SHARP EDGES MAX. XX MIN. XX

Q.A. CATEGORY A-3

		DATE
DRAWN BY	Jappe	10/17/2000
CHECKED BY		
DESIGN APPROVAL		
ENGINEER APPROVAL		
SUPVR. APPROVAL		

NEXT ASSEMBLY

BROOKHAVEN NATIONAL LABORATORY
ASSOCIATED UNIVERSITIES, INC.
UPTON, N.Y. 11973

CAD WIRING DIAGRAM

J18 GPIB CST.J18.VME

GPIB 1014D INTERFACE

SIZE A | D09-E-RD2818 | REV. A

DRAWING NUMBER

MATERIAL: ——— SCALE: NA WEIGHT: – SHEET 9

*AUTOCAD

REV.	ZONE	ECN NO.	DATE	BY	CKR	APP.

BNL, BNL 12/28/00 10:44 AM D09-E-RD2814.dwg

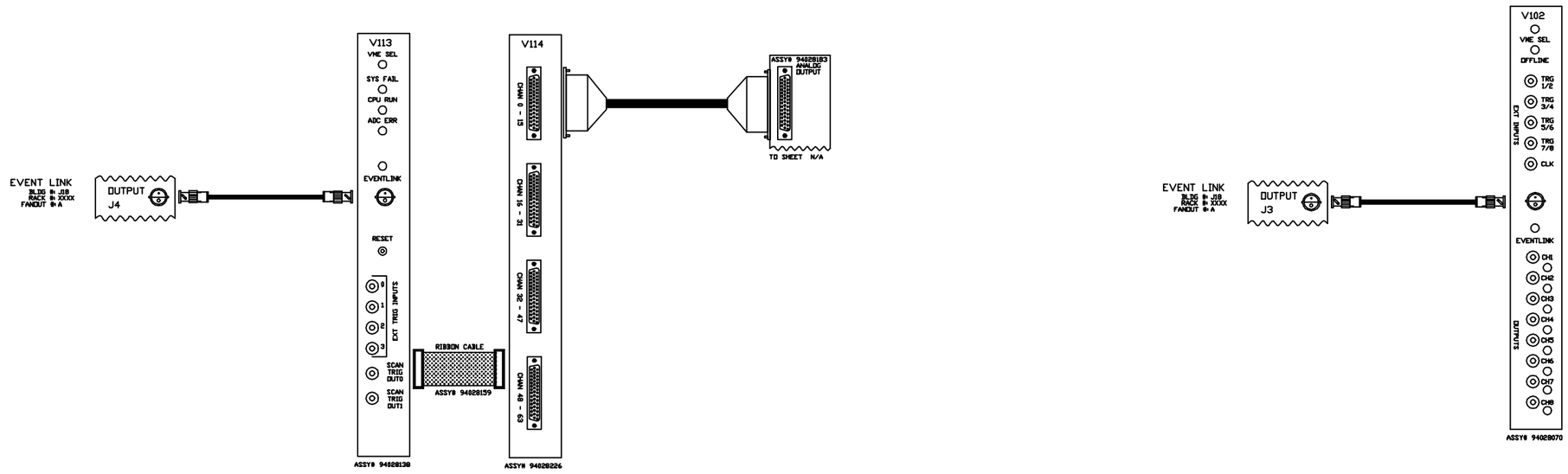

-3	-2	-1	REF DESIGNATOR	ITEM NO.	DESCRIPTION	MAT'L DWG NO.,BNL NO.
QTY REQD						

INTERPRET IN GENERAL ACCORDANCE WITH ASME Y14.24M-1989	Q.A. CATEGORY		DATE
	DRAWN BY	Warren Jappe	6/27/00
UNLESS OTHERWISE SPECIFIED DIMENSIONS ARE IN INCHES	CHECKED BY		
DECIMAL TOLERANCES .X ± .XX ± .XXX ± ANGULAR TOLERANCE ±	DESIGN APPROVAL		
	ENGINEER APPROVAL		
	SUPVR. APPROVAL		
NA FINISH / BREAK SHARP EDGES MAX. XX MIN. XX	NEXT ASSEMBLY		
OUTSTANDING ECN			

BROOKHAVEN NATIONAL LABORATORY
UPTON, N.Y. 11973

AGS CONTROLS WIRING DIAGRAM
BLDG. J18

MADC & V102

SIZE A — D09-E-RD2814 — REV.
DRAWING NUMBER

MATERIAL: N/A SCALE: NA WEIGHT: SHEET 5

1 *AUTOCAD

BNL, BNL 12/28/00 10:49 AM D09-E-RD2815.dwg

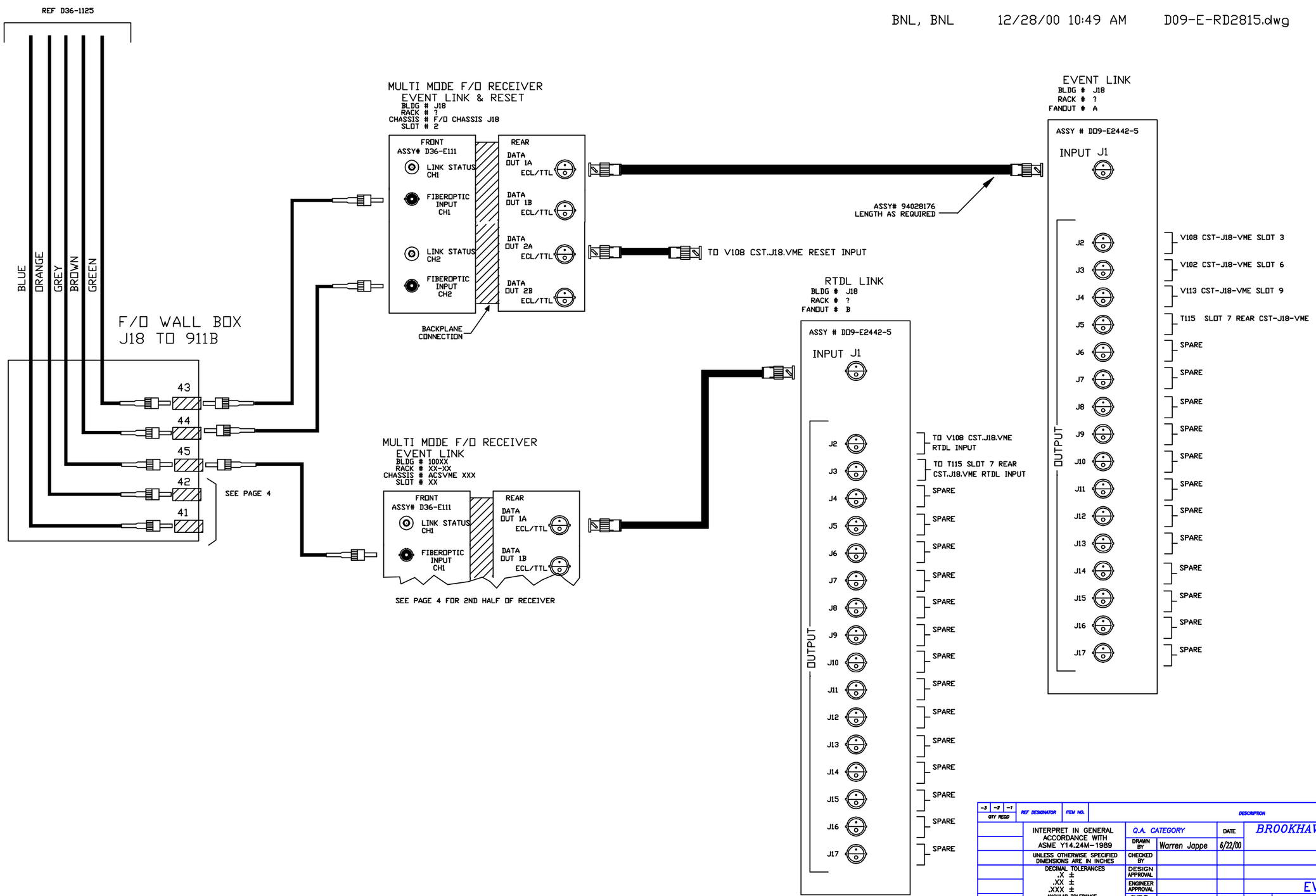

REV.	ZONE	ECN NO.	DATE	BY	CKR	APP.

-3	-2	-1	REF DESIGNATOR	ITEM NO.	DESCRIPTION	MAT'L DWG NO./BNL NO.
QTY REQD						

INTERPRET IN GENERAL ACCORDANCE WITH ASME Y14.24M-1989

UNLESS OTHERWISE SPECIFIED DIMENSIONS ARE IN INCHES

DECIMAL TOLERANCES
.X ±
.XX ±
.XXX ±
ANGULAR TOLERANCE
±

NA FINISH

BREAK SHARP EDGES
MAX. XX MIN. XX

OUTSTANDING ECN

Q.A. CATEGORY		DATE
DRAWN BY	Warren Jappe	6/22/00
CHECKED BY		
DESIGN APPROVAL		
ENGINEER APPROVAL		
SUPVR. APPROVAL		

NEXT ASSEMBLY

BROOKHAVEN NATIONAL LABORATORY
UPTON, N.Y. 11973

CAD WIRING DIAGRAM

J18 CST.J18.VME

EVENT LINK DETAIL

SIZE A | DRAWING NUMBER D09-E-RD2815 | REV.

MATERIAL: ——— SCALE: NA WEIGHT: — SHEET 6

*AUTOCAD

REV.	ZONE	ECN NO.	DATE	BY	CKR	APP.

BNL, BNL 12/28/00 10:58 AM D09-E-RD2816.dwg

J10 DUMP POWER SUPPLY

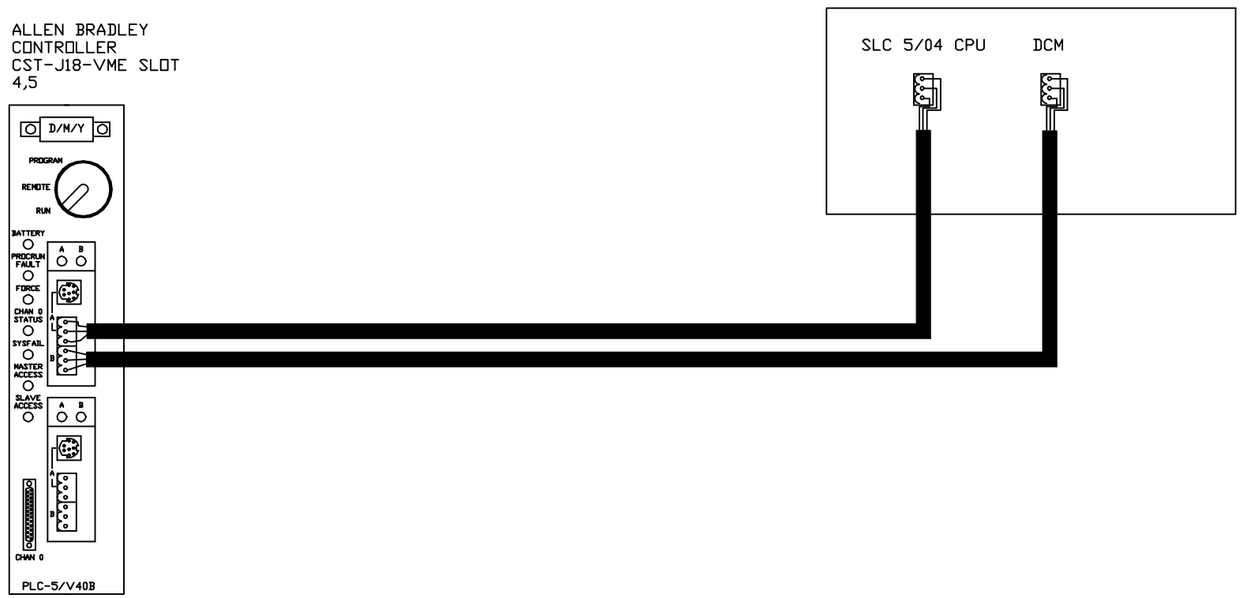

-3	-2	-1	REF DESIGNATOR	ITEM NO.	DESCRIPTION	MAT'L DWG NO.,BNL NO.
QTY REQD						

INTERPRET IN GENERAL ACCORDANCE WITH ASME Y14.24M-1989

UNLESS OTHERWISE SPECIFIED DIMENSIONS ARE IN INCHES

DECIMAL TOLERANCES
.X ±
.XX ±
.XXX ±
ANGULAR TOLERANCE
±

NA FINISH

BREAK SHARP EDGES
MAX. XX MIN. XX

OUTSTANDING ECN

Q.A. CATEGORY		DATE
DRAWN BY	Warren Jappe	8/31/99
CHECKED BY		
DESIGN APPROVAL		
ENGINEER APPROVAL		
SUPVR. APPROVAL		

NEXT ASSEMBLY

BROOKHAVEN NATIONAL LABORATORY
UPTON, N.Y. 11973

AGS CONTROLS WIRING DIAGRAM
BLDG. J18

Allen Bradey P. S. CONTROLLER

SIZE D
D09-E-RD2816
DRAWING NUMBER
REV.

MATERIAL: N/A SCALE: NA WEIGHT: SHEET 7

*AUTOCAD

REV.	ZONE	ECN NO.	DATE	BY	CKR	APP.

BNL, BNL 12/28/00 11:02 AM D09-E-RD2817.dwg

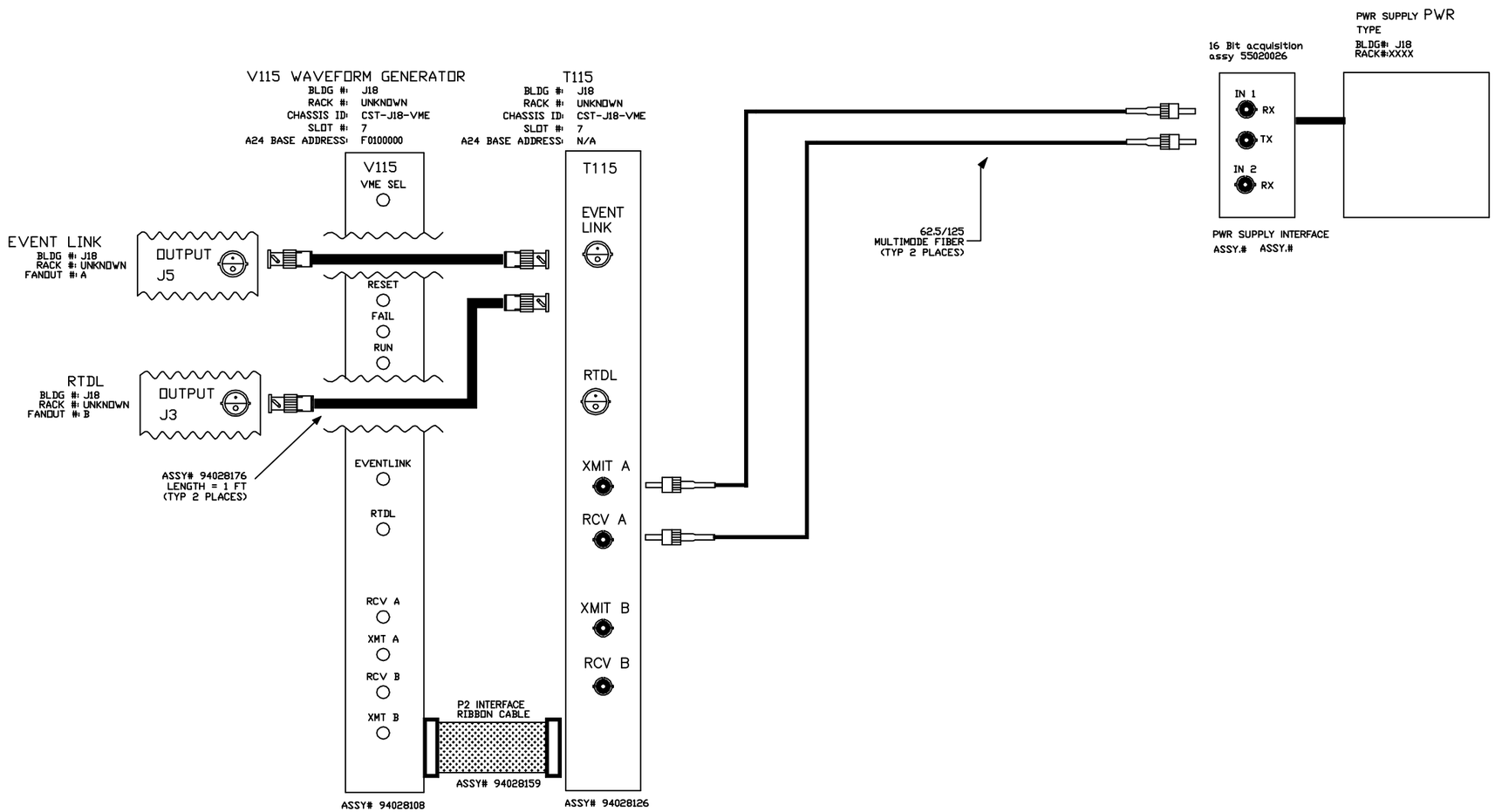

V115 JUMPER LIST
JP3=IN JP4=IN JP1=OUT JP2=OUT
A24 BASE ADDRESS JB1-A23=IN JB1-A22=IN JB1-A21=IN JB1-A20=OUT JB1-A19=IN JB1-A18=IN

-3	-2	-1	REF DESIGNATOR	ITEM NO.	DESCRIPTION	MAT'L DWG NO./BNL NO.
QTY REQD						

INTERPRET IN GENERAL ACCORDANCE WITH ASME Y14.24M-1989

UNLESS OTHERWISE SPECIFIED DIMENSIONS ARE IN INCHES
DECIMAL TOLERANCES
.X ±N/A
.XX ±N/A
.XXX ±N/A
ANGULAR TOLERANCE
± N/A

OUTSTANDING ECN

NA FINISH

BREAK SHARP EDGES
MAX. XX MIN. XX

Q.A. CATEGORY A-3		DATE
DRAWN BY	Warren Jappe	9/1/1999
CHECKED BY		
DESIGN APPROVAL		
ENGINEER APPROVAL		
SUPVR. APPROVAL		

NEXT ASSEMBLY

BROOKHAVEN NATIONAL LABORATORY
UPTON, N.Y. 11973

AGS CONTROLS

J18 RACK

V115 and T115

SIZE D — DRAWING NUMBER D09-E-RD2817 — REV. A

MATERIAL: ——— SCALE: FULL WEIGHT: – SHEET 8

*AUTOCAD

REV.	ZONE	ECN NO.	DATE	BY	CKR	APP.

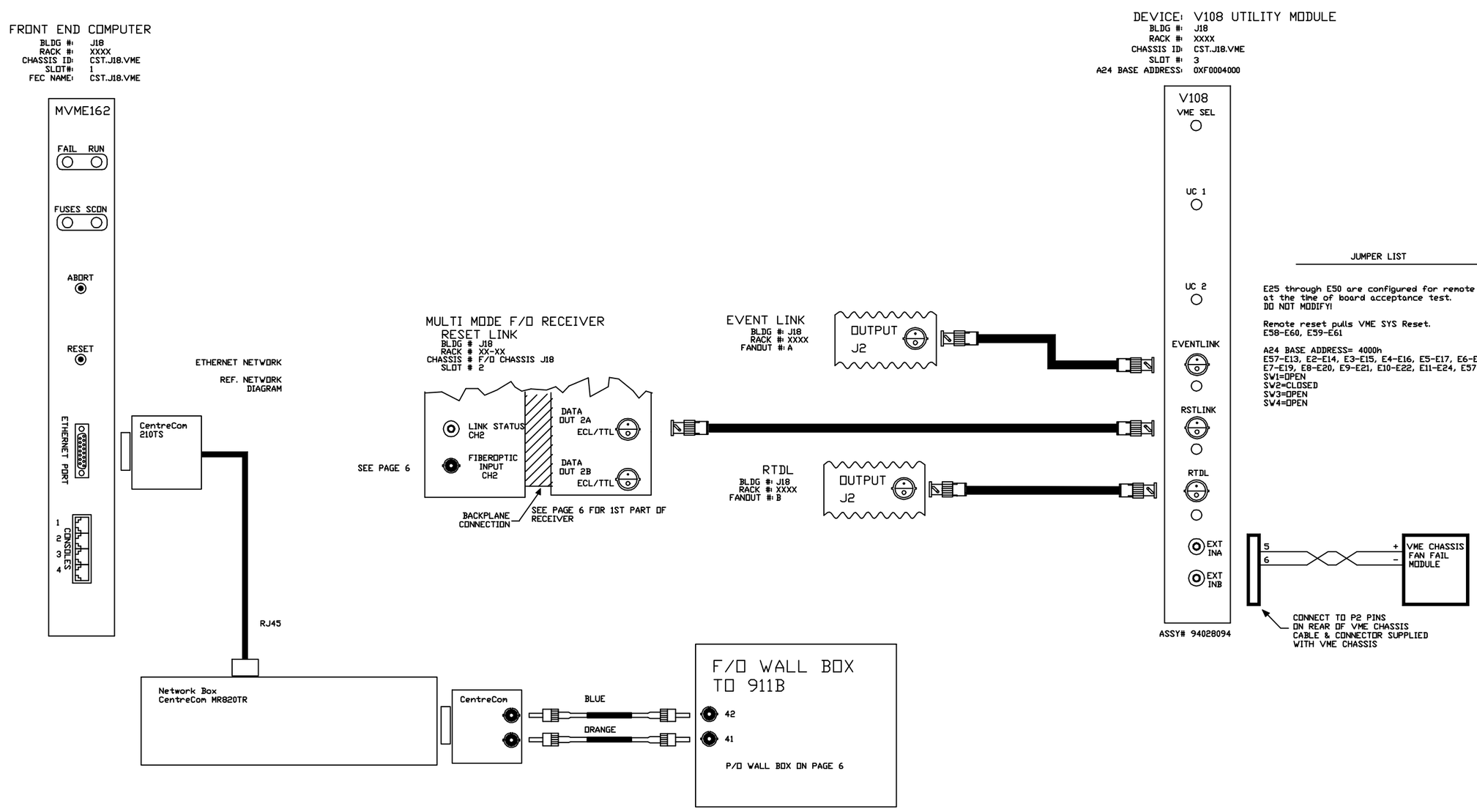

-3	-2	-1	REF DESIGNATOR	ITEM NO.	DESCRIPTION	MAT'L DWG NO./BNL NO.
QTY REQD						

INTERPRET IN GENERAL ACCORDANCE WITH ASME Y14.24M-1989

UNLESS OTHERWISE SPECIFIED DIMENSIONS ARE IN INCHES

DECIMAL TOLERANCES
.X ±XXX
.XX ±XXX
.XXX ±XXX
ANGULAR TOLERANCE ± XXX

OUTSTANDING ECN

NA FINISH

BREAK SHARP EDGES MAX. XX MIN. XX

Q.A. CATEGORY A-3

		DATE
DRAWN BY	Jappe	6/26/2000
CHECKED BY		
DESIGN APPROVAL		
ENGINEER APPROVAL		
SUPVR. APPROVAL		

NEXT ASSEMBLY

BROOKHAVEN NATIONAL LABORATORY
ASSOCIATED UNIVERSITIES, INC.
UPTON, N.Y. 11973

CAD WIRING DIAGRAM

J18 VME CHASSIS CST.J18.VME

CPU/MEMORY /V108 UTIL MODULE

SIZE A | DRAWING NUMBER D09-E-RD2813 | REV. A

MATERIAL: ——— SCALE: NA WEIGHT: – SHEET 4

*AUTOCAD