REV.	ZONE	ECN NO.	DATE	BY	CKR	APP.

BNL, BNL 12/28/00 9:52 AM D09-E-RD2804.dwg

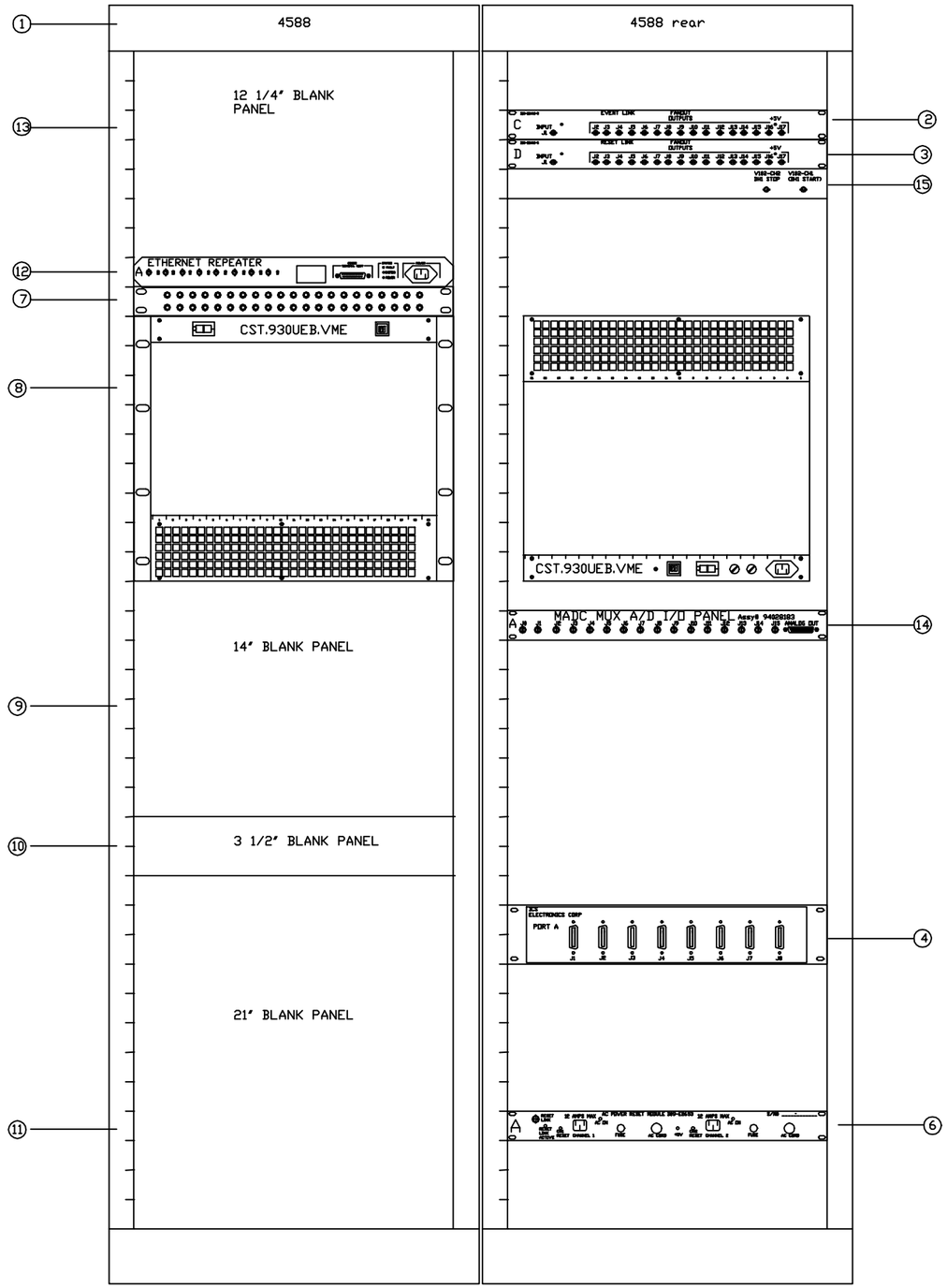

CONTROLLER LIST

CDC.B_VAC_RS232_1
CDC.B_VAC_RS232_2
CDC.B_VAC_DATACON_1
CDC.B_VAC_DATACON_2
CDC.B.AMUX_930UEB
CDC.BINJ.930U
CDC.LTB.INST
CDC.BLM.INST

-3	-2	-1	REF DESIGNATOR	ITEM NO.	DESCRIPTION	MAT'L DWG NO.,BNL NO.
		1	15	14	CUSTOM PATCH PANEL	
		1	14	13	MADC PANEL	
		1	10	12	3 1/2" BLANK PANEL	
		1	13	11	21" BLANK PANEL	
		1	12	10	ETHERNET REPEATER	
		1	11	9	10.5" BLANK PANEL	
		1	8	8	6U VME CHASSIS CST-L18A-VME	X
		1	7	7	GROMMET PANEL	X
		1	9	5	14" BLANK PANEL	
		1	6	6	AC RESET MODULE	
		1	4	4	IEEE 488 FANOUT	
		1	3	3	RESET LINK FANOUT	
		1	2	2	EVENTLINK FANOUT	
		1	1	1	70" RACK	X

QTY REQD

INTERPRET IN GENERAL ACCORDANCE WITH ASME Y14.24M-1989

UNLESS OTHERWISE SPECIFIED DIMENSIONS ARE IN INCHES
DECIMAL TOLERANCES
.X ±.030
.XX ±.015
.XXX ±.005
ANGULAR TOLERANCE
± .5°

OUTSTANDING ECN

NA FINISH

BREAK SHARP EDGES
MAX. XX MIN. XX

Q.A. CATEGORY A-3

		DATE
DRAWN BY	JAPPE	1/18/2000
CHECKED BY		
DESIGN APPROVAL		
ENGINEER APPROVAL		
SUPVR. APPROVAL		

NEXT ASSEMBLY

BROOKHAVEN NATIONAL LABORATORY
UPTON, N.Y. 11973
CA Division
930UEB Rack Layout
CST.930UEB.VME

SIZE A
D09-E-RD2804
DRAWING NUMBER
REV. A

MATERIAL: ——— SCALE: FULL WEIGHT: – SHEET 1

*AUTOCAD

REV.	ZONE	ECN NO.	DATE	BY	CKR	APP.

CONTROLS- 4/4/01 2:25 PM D09-E-RD2805.dwg

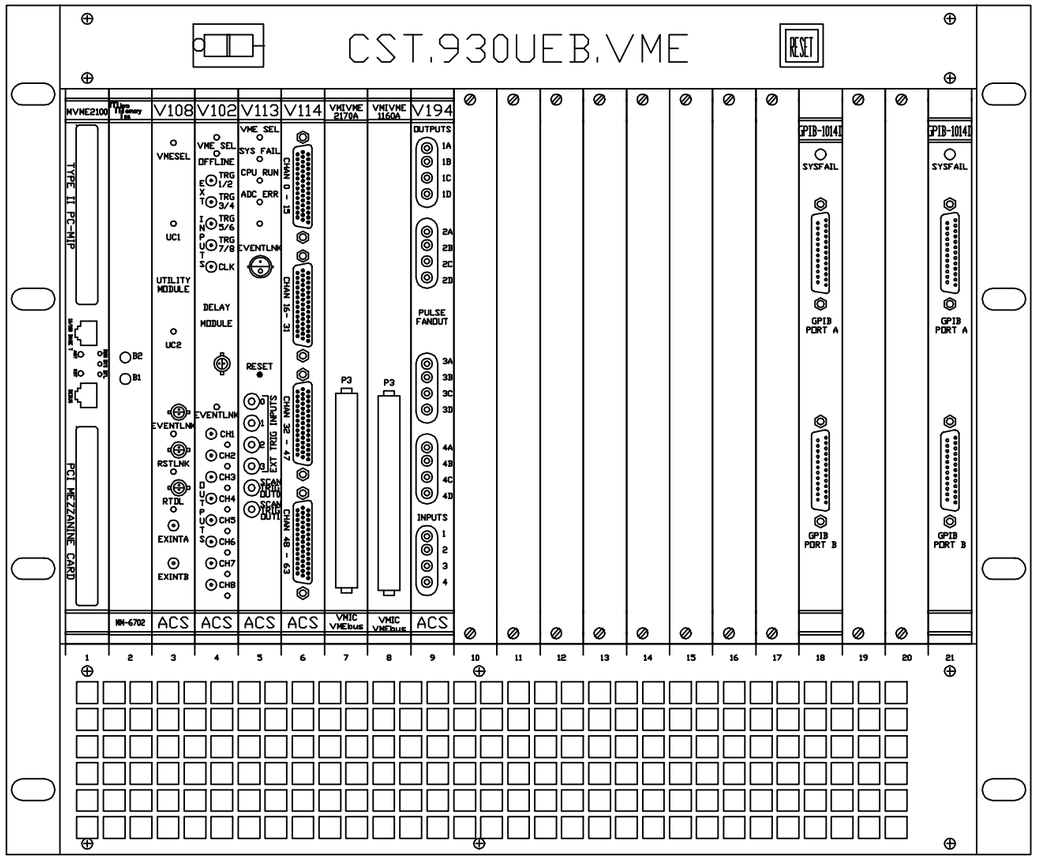

FRONT VIEW

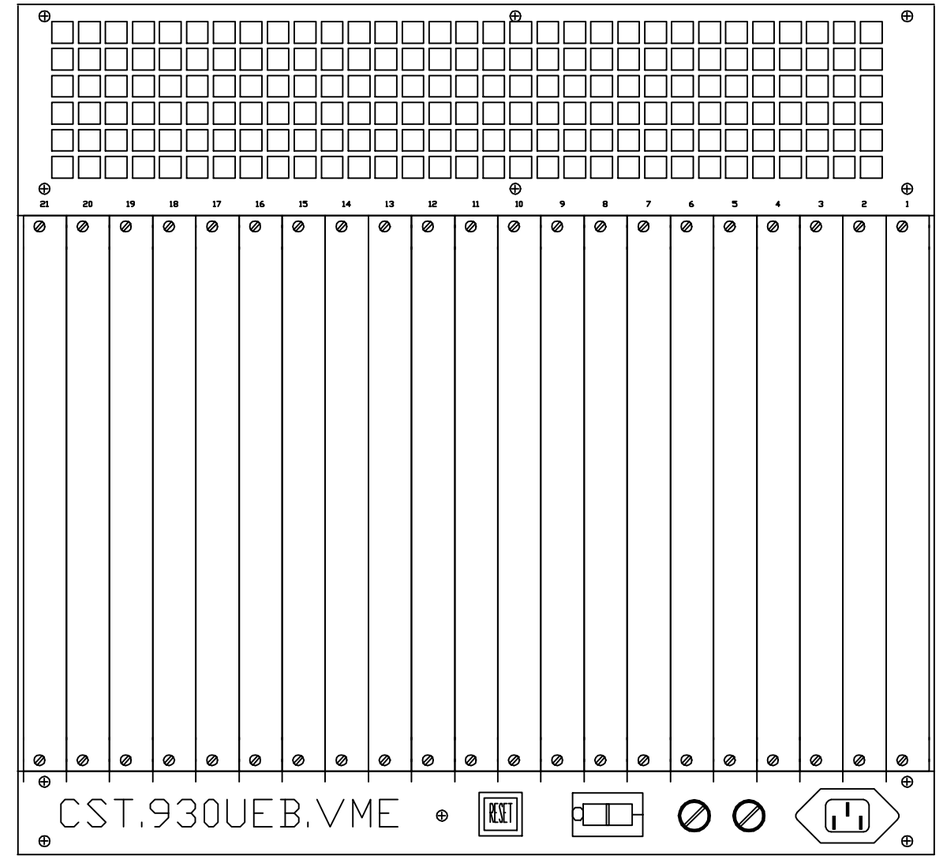

REAR VIEW

NOTE:

1. ALL UNUSED SLOTS, FRONT AND REAR
2. INSTALL 64 PIN RIBBON CABLE FOR MADC BETWEEN SLOTS 5 & 6 ON P2 REAR

-3	-2	-1	REF DESIGNATOR	ITEM NO.	DESCRIPTION	MAT'L DWG NO.,BNL NO.
		1	SLOT 20	7	ALLEN BRADLEY 1014D 488 GPIB CONTROLLER	-
		1	SLOT 21	6	ALLEN BRADLEY 1014D 488 GPIB CONTROLLER	-
		1	SLOT 4	5	V102 DELAY MODULES	94028072
		1	SLOT 3	4	V108 UTILITY MODULE	94028094
		1	SLOT 2	3	MEMORY BOARD	MM-6702
		1	SLOT 1	2	FRONT END COMPUTER	POWER3E
		1	N/A	1	VME CHASSIS	RHIC-93008000

QTY REQD

INTERPRET IN GENERAL ACCORDANCE WITH ASME Y14.24M-1989

UNLESS OTHERWISE SPECIFIED DIMENSIONS ARE IN INCHES

DECIMAL TOLERANCES
.X ±.030
.XX ±.015
.XXX ±.005
ANGULAR TOLERANCE
± .5°

OUTSTANDING ECN

NA FINISH

BREAK SHARP EDGES
MAX. XX MIN. XX

Q.A. CATEGORY A-3		DATE
DRAWN BY	Jappe	2/3/2000
CHECKED BY		
DESIGN APPROVAL		
ENGINEER APPROVAL		
SUPVR. APPROVAL		

NEXT ASSEMBLY

BROOKHAVEN NATIONAL LABORATORY
UPTON, N.Y. 11973

CAD CONTROLS

BLDG. 930UEB RACK 4588

VME CHASSIS CST.930UEB.VME

SIZE A | DRAWING NUMBER D09-E-RD2805 | REV. A

MATERIAL: ——— SCALE: NA WEIGHT: - SHEET 2

1 *AUTOCAD

BNL, BNL 12/28/00 9:55 AM D09-E-RD2806.dwg

REV.	ZONE	ECN NO.	DATE	BY	CKR	APP.

FRONT END COMPUTER
BLDG #: 930UEB
RACK #: 4588
CHASSIS ID: CST.930UEB.VME
SLOT#: 1
FEC NAME: CST.930UEB.VME

DEVICE: MM-6702 MEMORY MODULE
BLDG #: 930UEB
RACK #: 4588
CHASSIS ID: CST.930UEB.VME
SLOT #: 2
A24 BASE ADDRESS: XXX

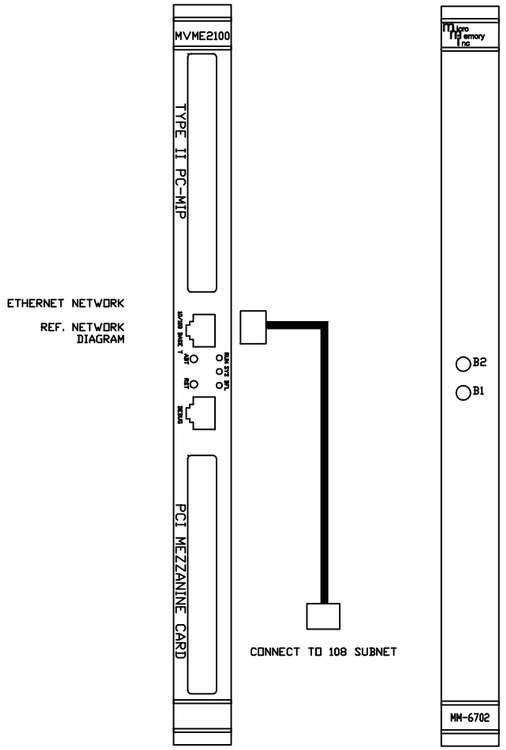

JUMPER LIST
1. REMOVE E1.
2. INSTALL E15.
3. SW3 CLOSE ALL POSITIONS.
4. SW2 CLOSE POSITIONS 7 AND 8.
5. SW1 CLOSE POSITIONS 2-8.
6. INSTALL E14 AND E25 TO ENABLE BATTERIES

TO SET UP BOOT PARAMS FOR THE FEC
ON A X-TERM RUN StartUp
Top of StartUp

go to diagnostics
then Servers
then AGS VME stations
then pick a station you want the params for
then fec diagnostics
then Show Boot Params (PPC) (power PC)

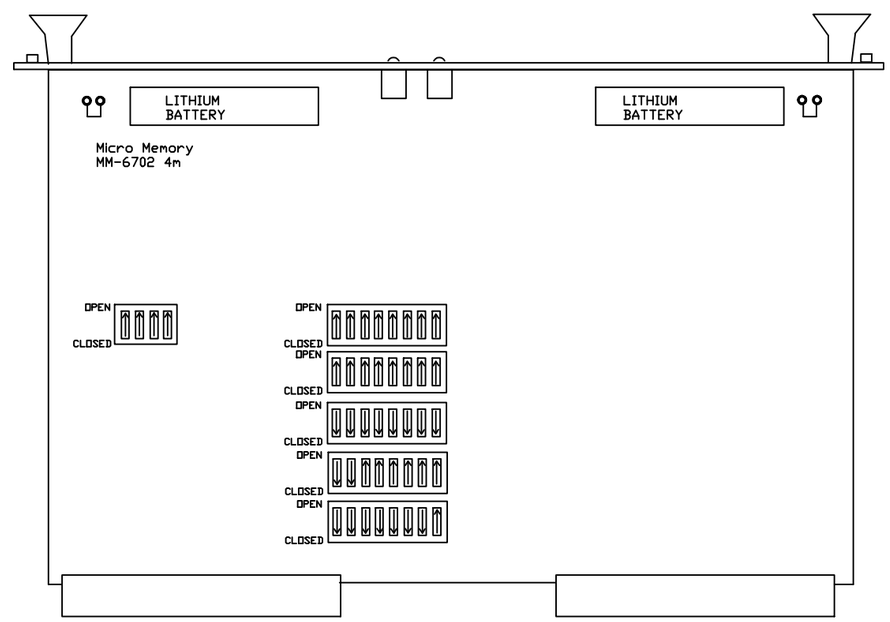

DEVICE: V108 UTILITY MODULE
BLDG #: 930UEB
RACK #: 4588
CHASSIS ID: CST.930UEB.VME
SLOT #: 3
A24 BASE ADDRESS: 0XF0004000

JUMPER LIST

E25 through E50 are configured for remote reset address
at the time of board acceptance test.
DO NOT MODIFY!

Remote reset pulls VME SYS Reset.
E58-E60, E59-E61

A24 BASE ADDRESS= 4000h
E57-E13, E2-E14, E3-E15, E4-E16, E5-E17, E6-E18
E7-E19, E8-E20, E9-E21, E10-E22, E11-E24, E57-E23
SW1=OPEN
SW2=CLOSED
SW3=OPEN
SW4=OPEN

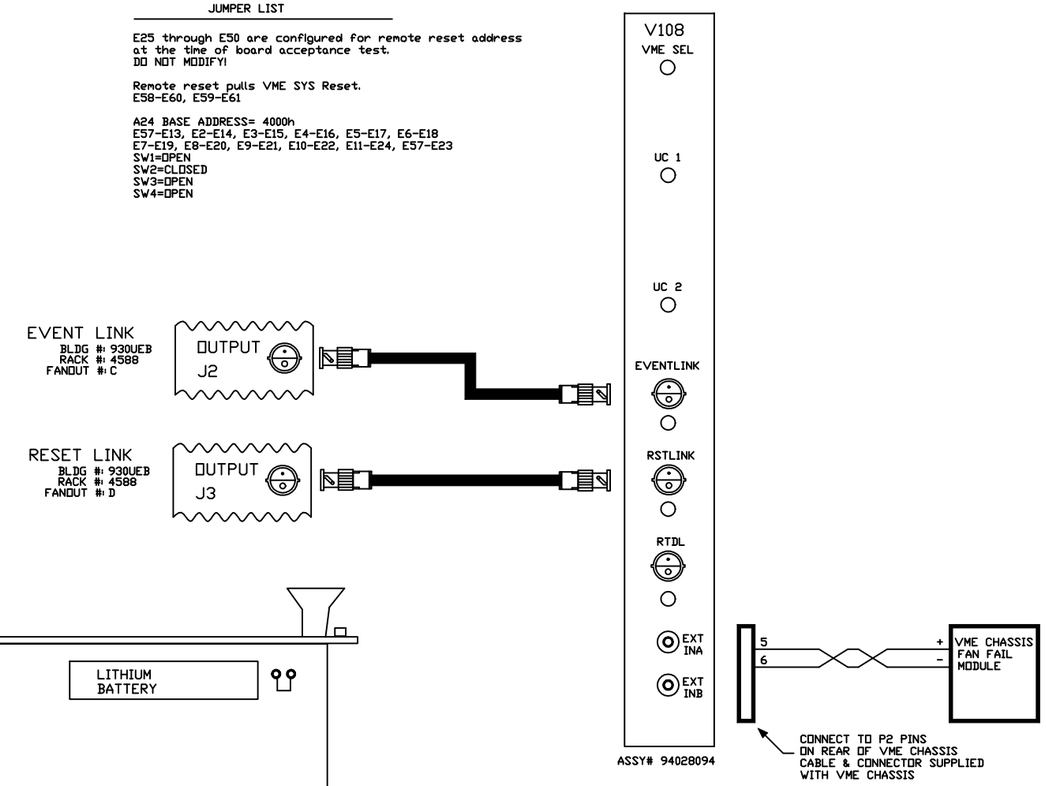

-3	-2	-1	REF DESIGNATOR	ITEM NO.	DESCRIPTION	MAT'L. DWG NO./BNL NO.
QTY REQD						

INTERPRET IN GENERAL ACCORDANCE WITH ASME Y14.24M-1989
UNLESS OTHERWISE SPECIFIED DIMENSIONS ARE IN INCHES
DECIMAL TOLERANCES
.X ±.XXX
.XX ±.XXX
.XXX ±.XXX
ANGULAR TOLERANCE ± XXX
NA FINISH
BREAK SHARP EDGES
MAX. XX MIN. XX
OUTSTANDING ECN

Q.A. CATEGORY A-3
DRAWN BY Jappe DATE 2/4/2000
CHECKED BY
DESIGN APPROVAL
ENGINEER APPROVAL
SUPVR. APPROVAL
NEXT ASSEMBLY

BROOKHAVEN NATIONAL LABORATORY
ASSOCIATED UNIVERSITIES, INC.
UPTON, N.Y. 11973

CAD WIRING DIAGRAM
930UEB VME CHASSIS CST.930UEB.VME
CPU/MEMORY /V108 UTIL MODULE

SIZE A | D09-E-RD2806 | REV. A
DRAWING NUMBER
MATERIAL: ——— SCALE: NA WEIGHT: – SHEET 3

*AUTOCAD

REV.	ZONE	ECN NO.	DATE	BY	CKR	APP.

BNL, BNL 12/28/00 9:59 AM D09-E-RD2807.dwg

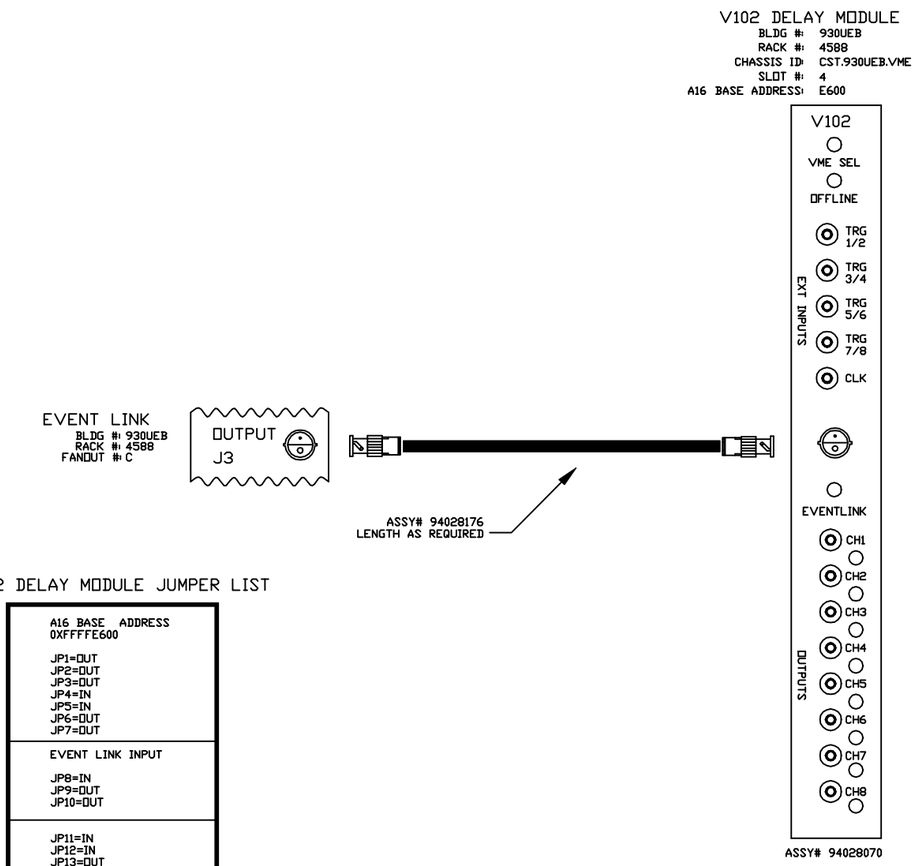

V102 DELAY MODULE JUMPER LIST

A16 BASE ADDRESS 0XFFFFE600 JP1=OUT JP2=OUT JP3=OUT JP4=IN JP5=IN JP6=OUT JP7=OUT
EVENT LINK INPUT JP8=IN JP9=OUT JP10=OUT
JP11=IN JP12=IN JP13=OUT JP14=IN

-3	-2	-1	REF DESIGNATOR	ITEM NO.	DESCRIPTION	MAT'L. DWG NO./BNL NO.
QTY REQD						

INTERPRET IN GENERAL ACCORDANCE WITH ASME Y14.24M-1989

UNLESS OTHERWISE SPECIFIED DIMENSIONS ARE IN INCHES

DECIMAL TOLERANCES
.X ±XXX
.XX ±XXX
.XXX ±XXX
ANGULAR TOLERANCE
± XXX

OUTSTANDING ECN

NA FINISH

BREAK SHARP EDGES
MAX. XX MIN. XX

Q.A. CATEGORY A-3		DATE
DRAWN BY	Warren Jappe	2/4/2000
CHECKED BY		
DESIGN APPROVAL		
ENGINEER APPROVAL		
SUPVR. APPROVAL		

NEXT ASSEMBLY

BROOKHAVEN NATIONAL LABORATORY
UPTON, N.Y. 11973

CAD WIRING DIAGRAM

BLDG.930UEB CHASSIS CST.930UEB.VME

V102 DELAY MODULE

SIZE A | DRAWING NUMBER D09-E-RD2807 | REV. A

MATERIAL: ——— SCALE: NA WEIGHT: SHEET 4

*AUTOCAD

CONTROLS- 4/4/01 2:55 PM D09-E-RD2809.dwg

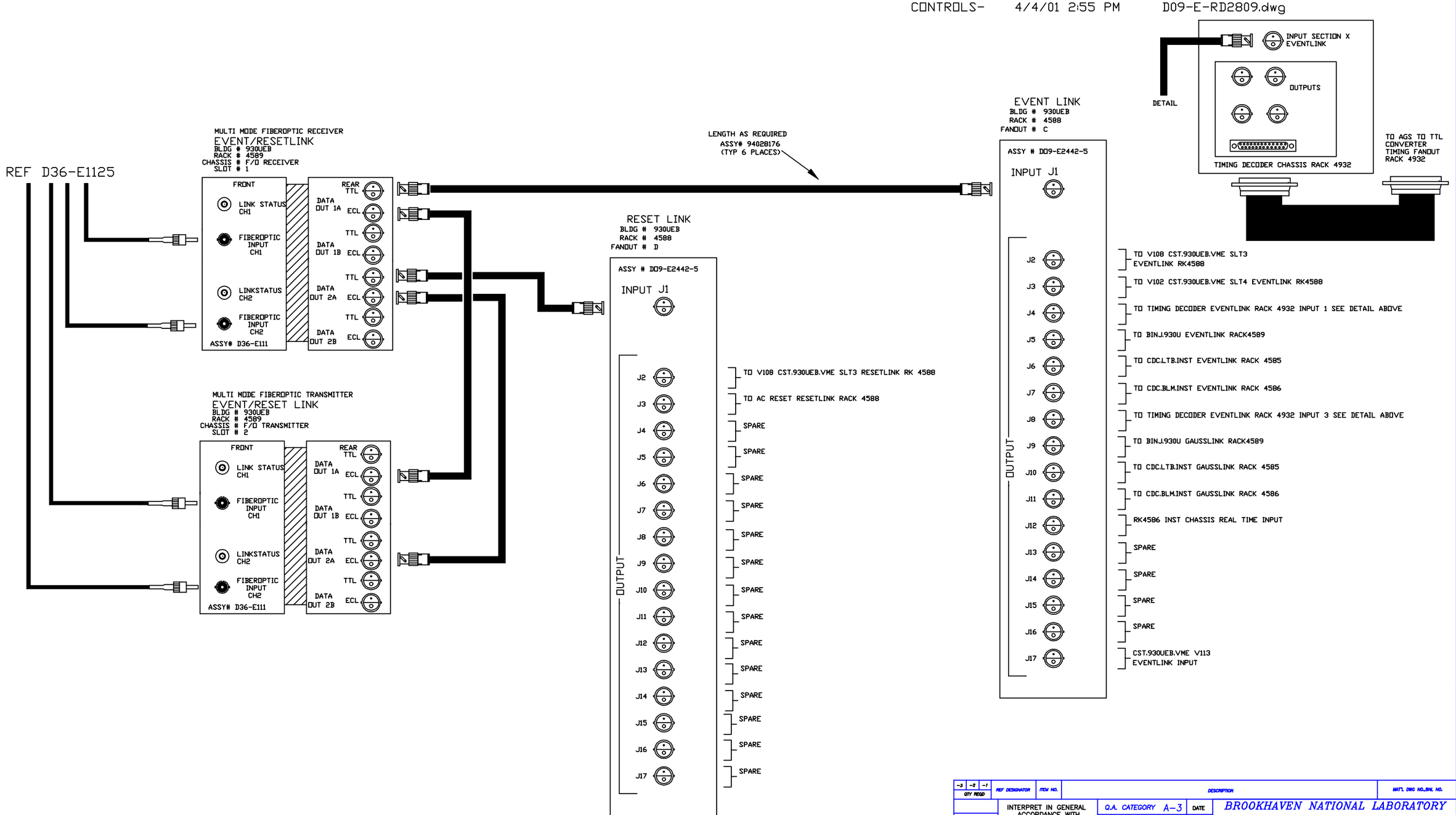

REV.	ZONE	ECN NO.	DATE	BY	CKR	APP.

-3	-2	-1	REF DESIGNATOR	ITEM NO.	DESCRIPTION	MAT'L. DWG NO.,BINL NO.
QTY REQD						

INTERPRET IN GENERAL ACCORDANCE WITH ASME Y14.24M-1989

UNLESS OTHERWISE SPECIFIED DIMENSIONS ARE IN INCHES

DECIMAL TOLERANCES .X ±.030 .XX ±.015 .XXX ±.005 ANGULAR TOLERANCE ± .5°

OUTSTANDING ECN

NA FINISH

BREAK SHARP EDGES MAX. XX MIN. XX

Q.A. CATEGORY A-3		DATE
DRAWN BY	Warren Jappe	3/3/00
CHECKED BY		
DESIGN APPROVAL		
ENGINEER APPROVAL		
SUPVR. APPROVAL		

NEXT ASSEMBLY

BROOKHAVEN NATIONAL LABORATORY

UPTON, N.Y. 11973

CAD WIRING DIAGRAM

930UEB CST.930UEB.VME

EVENT/RESET LINK DETAIL

SIZE A | DRAWING NUMBER D09-E-RD2809 | REV. A

MATERIAL: ——— SCALE: NA WEIGHT: – SHEET 5

*AUTOCAD

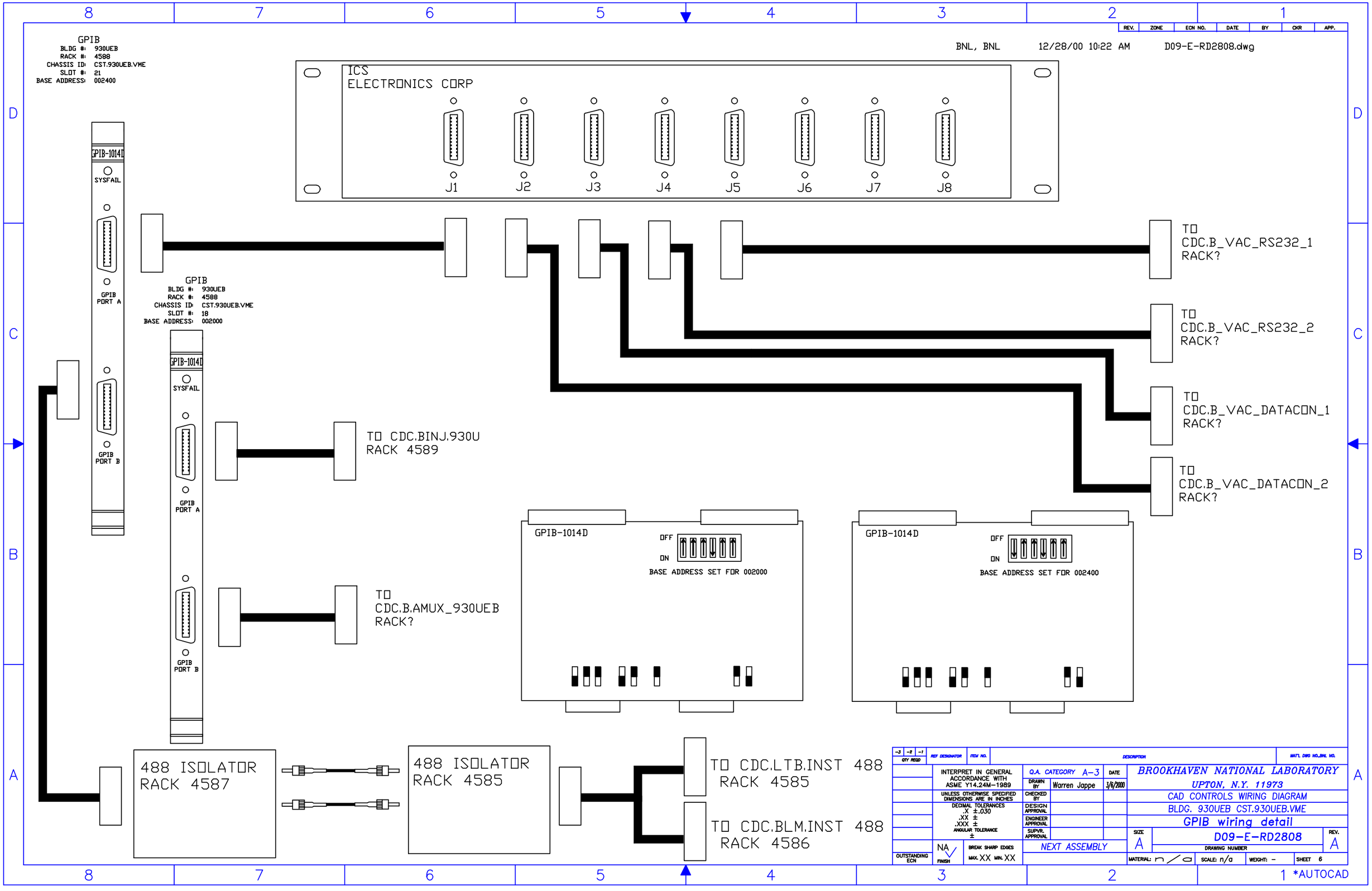
GPIB
BLDG #: 930UEB
RACK #: 4588
CHASSIS ID: CST.930UEB.VME
SLOT #: 21
BASE ADDRESS: 002400
BNL, BNL 12/28/00 10:22 AM D09-E-RD2808.dwg
ICS
ELECTRONICS CORP
J1
J2
J3
J4
J5
J6
J7
J8
GPIB-1014D
SYSFAIL
GPIB PORT A
GPIB PORT B
TO CDC.B_VAC_RS232_1 RACK?
TO CDC.B_VAC_RS232_2 RACK?
TO CDC.B_VAC_DATACON_1 RACK?
TO CDC.B_VAC_DATACON_2 RACK?
GPIB
BLDG #: 930UEB
RACK #: 4588
CHASSIS ID: CST.930UEB.VME
SLOT #: 18
BASE ADDRESS: 002000
TO CDC.BINJ.930U RACK 4589
TO CDC.B.AMUX_930UEB RACK?
OFF
ON
BASE ADDRESS SET FOR 002000
BASE ADDRESS SET FOR 002400
488 ISOLATOR RACK 4587
488 ISOLATOR RACK 4585
TO CDC.LTB.INST 488 RACK 4585
TO CDC.BLM.INST 488 RACK 4586
INTERPRET IN GENERAL ACCORDANCE WITH ASME Y14.24M-1989
UNLESS OTHERWISE SPECIFIED DIMENSIONS ARE IN INCHES
DECIMAL TOLERANCES .X ±.030 .XX ± .XXX ±
ANGULAR TOLERANCE ±
BREAK SHARP EDGES MAX. XX MIN. XX
NEXT ASSEMBLY
Q.A. CATEGORY A-3
DRAWN BY Warren Jappe 3/6/2000
CHECKED BY
DESIGN APPROVAL
ENGINEER APPROVAL
SUPVR. APPROVAL
BROOKHAVEN NATIONAL LABORATORY
UPTON, N.Y. 11973
CAD CONTROLS WIRING DIAGRAM
BLDG. 930UEB CST.930UEB.VME
GPIB wiring detail
SIZE A
D09-E-RD2808
REV. A
DRAWING NUMBER
MATERIAL: n/a
SCALE: n/a
WEIGHT: -
SHEET 6
*AUTOCAD

REV.	ZONE	ECN NO.	DATE	BY	CKR	APP.

BNL, BNL 12/28/00 10:44 AM D09-E-RD2814.dwg

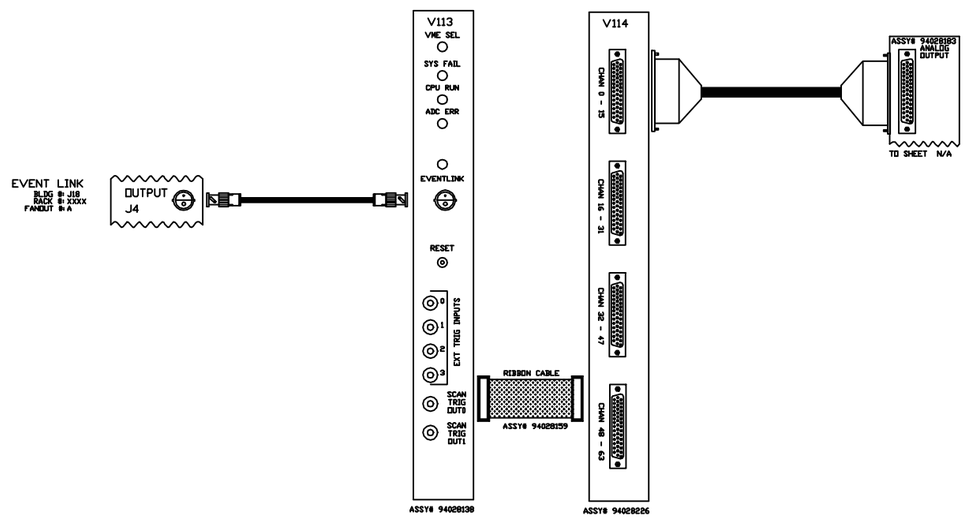

-3	-2	-1	REF DESIGNATOR	ITEM NO.	DESCRIPTION	MAT'L. DWG NO.,BNL NO.
QTY REQD						

INTERPRET IN GENERAL ACCORDANCE WITH ASME Y14.24M-1989

UNLESS OTHERWISE SPECIFIED DIMENSIONS ARE IN INCHES

DECIMAL TOLERANCES
.X ±
.XX ±
.XXX ±
ANGULAR TOLERANCE ±

NA FINISH

BREAK SHARP EDGES MAX. XX MIN. XX

OUTSTANDING ECN

Q.A. CATEGORY		DATE
DRAWN BY	Warren Jappe	6/27/00
CHECKED BY		
DESIGN APPROVAL		
ENGINEER APPROVAL		
SUPVR. APPROVAL		

NEXT ASSEMBLY

BROOKHAVEN NATIONAL LABORATORY
UPTON, N.Y. 11973

AGS CONTROLS WIRING DIAGRAM

BLDG. 930UEB

MADC

SIZE A

D09-E-RD2924

DRAWING NUMBER

REV.

MATERIAL: N/A SCALE: NA WEIGHT: SHEET 7

1 *AUTOCAD

REV.	ZONE	ECN NO.	DATE	BY	CKR	APP.

CONTROLS- 4/4/01 4:09 PM D09-E-RDXXXZ.dwg

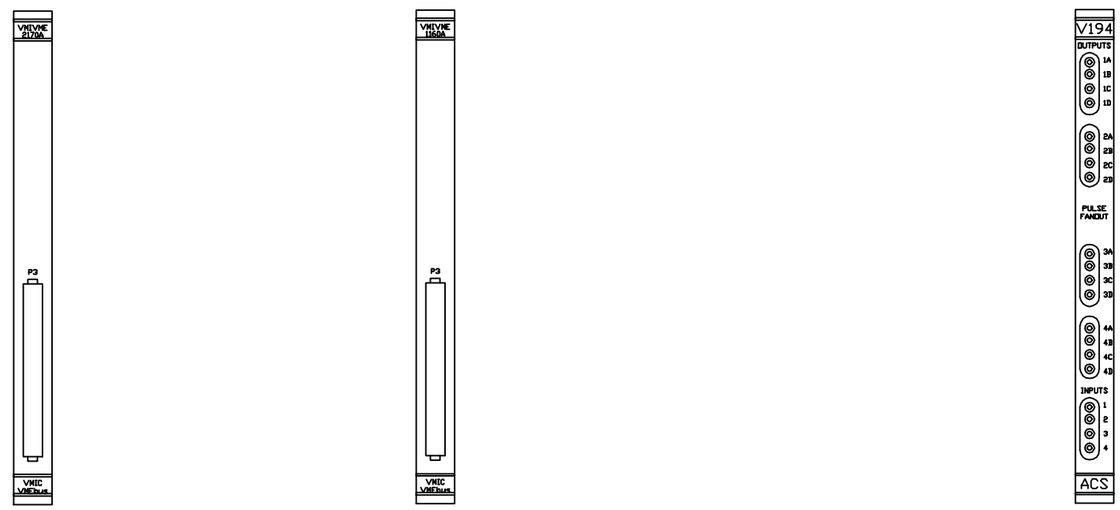

-3	-2	-1	REF DESIGNATOR	ITEM NO.	DESCRIPTION	MAT'L DWG NO./BNL NO.
QTY REQD						

INTERPRET IN GENERAL ACCORDANCE WITH ASME Y14.24M-1989

UNLESS OTHERWISE SPECIFIED DIMENSIONS ARE IN INCHES

DECIMAL TOLERANCES .X ± .XX ± .XXX ± ANGULAR TOLERANCE ±

NA FINISH

BREAK SHARP EDGES MAX. XX MIN. XX

OUTSTANDING ECN

Q.A. CATEGORY		DATE
DRAWN BY	Warren Jappe	4/4/2001
CHECKED BY		
DESIGN APPROVAL		
ENGINEER APPROVAL		
SUPVR. APPROVAL		

NEXT ASSEMBLY

BROOKHAVEN NATIONAL LABORATORY

UPTON, N.Y. 11973

AGS CONTROLS WIRING DIAGRAM

930UEB

VMIVME 2170, VMIVME1160A, V194

SIZE A

D09-E-RD2925

DRAWING NUMBER

REV.

MATERIAL: N/A SCALE: NA WEIGHT: SHEET 8

*AUTOCAD