REV.	ZONE	ECN NO.	DATE	BY	CKR	APP.

BNL, BNL 12/28/00 9:22 AM D09-E-RD2797.dwg

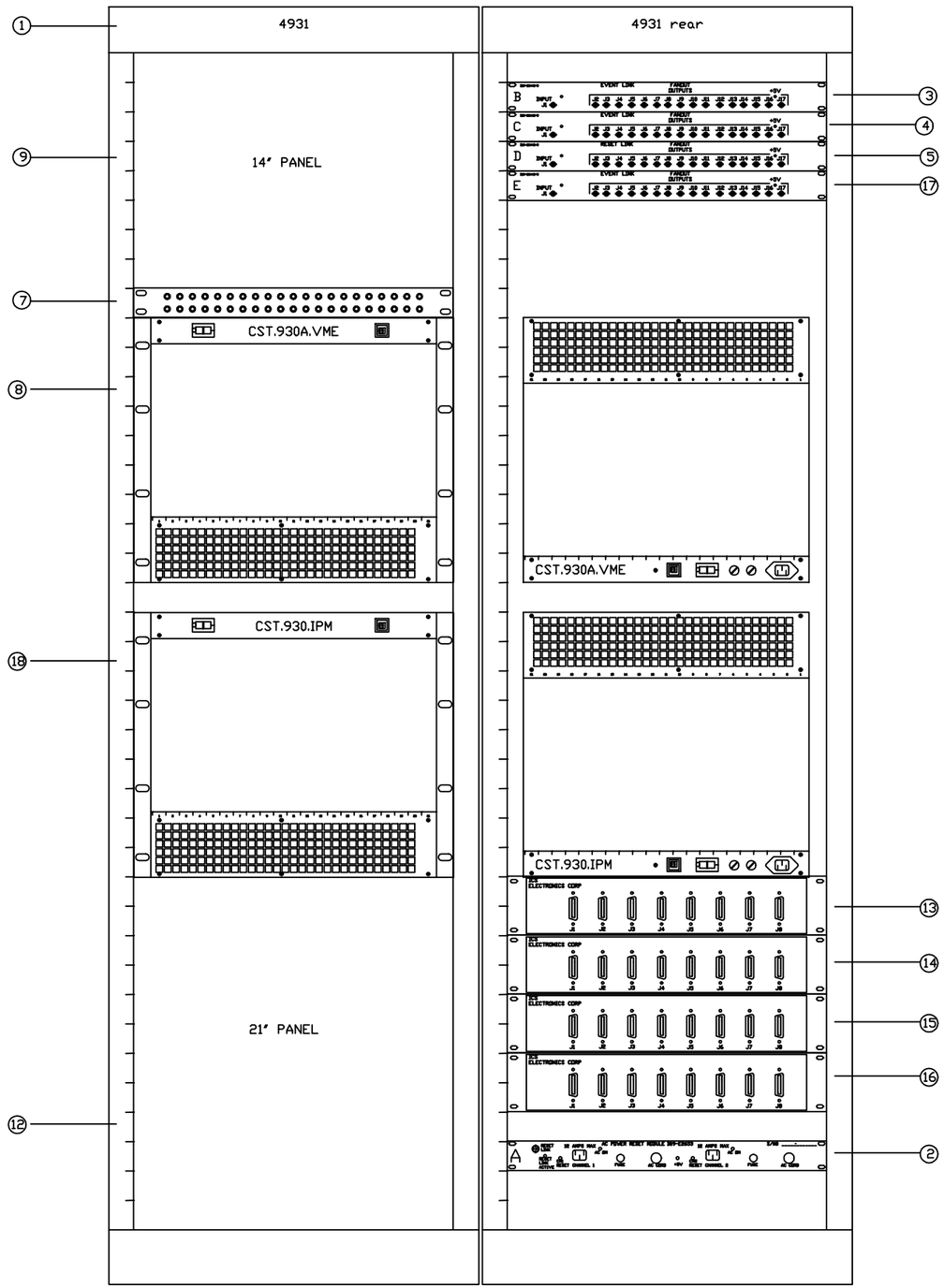

CONTROLLER LIST

CDC.BINJ.930A
CDC.BST.TUNE.CHROM
CDC.BMM.PS
CDC.BST.COR_ORB_BC
CDC.BST.COR_ORB_CD
CDC.BST.TIME_MON
CDC.BST.STOP_BAND
BOOSTER SYNTHETIC GAUSS CLOCK

-3	-2	-1	REF DESIGNATOR	ITEM NO.	DESCRIPTION	MAT'L. DWG NO.,BNL NO.
		4	13,14,15,16	12	488 FANOUT	
		1	12	11	21" BLANK PANEL	
		1	9	9	14" BLANK PANEL 8U	
		1	8	8	6U VME CHASSIS CST930A.VME1	
		1	7	7	GROMMET PANEL	
		1	18	14	6U VME CHASSIS CST.930.IPM	
		4	3,4,5,17	3	EVENTLINK/RESET LINK FANOUTS	
		1	2	2	AC RESET MODULE	
		1	1	1	70" RACK	

QTY REQD

INTERPRET IN GENERAL ACCORDANCE WITH ASME Y14.24M-1989

UNLESS OTHERWISE SPECIFIED DIMENSIONS ARE IN INCHES
DECIMAL TOLERANCES
.X ±.030
.XX ±.015
.XXX ±.005
ANGULAR TOLERANCE ± .5°

NA FINISH
BREAK SHARP EDGES
MAX. XX MIN. XX

OUTSTANDING ECN

Q.A. CATEGORY A-3
DATE
DRAWN BY JAPPE 2/3/2000
CHECKED BY
DESIGN APPROVAL
ENGINEER APPROVAL
SUPVR. APPROVAL

NEXT ASSEMBLY

BROOKHAVEN NATIONAL LABORATORY
UPTON, N.Y. 11973
CA Division
930A Rack Layout
CST.930A.VME

SIZE A
D09-E-RD2797
DRAWING NUMBER
REV. A

MATERIAL: ——— SCALE: FULL WEIGHT: – SHEET 1

*AUTOCAD

REV.	ZONE	ECN NO.	DATE	BY	CKR	APP.

CONTROLS- 7/24/03 8:51 AM D09-E-RD2798.dwg

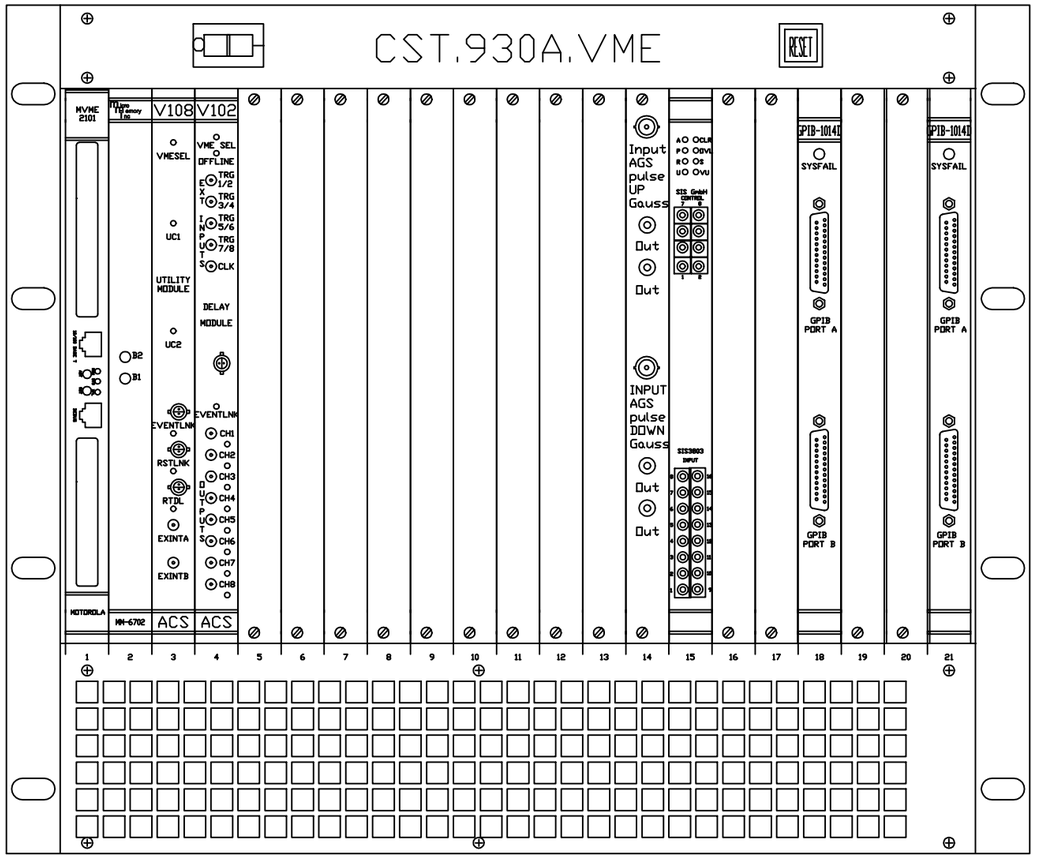

FRONT VIEW

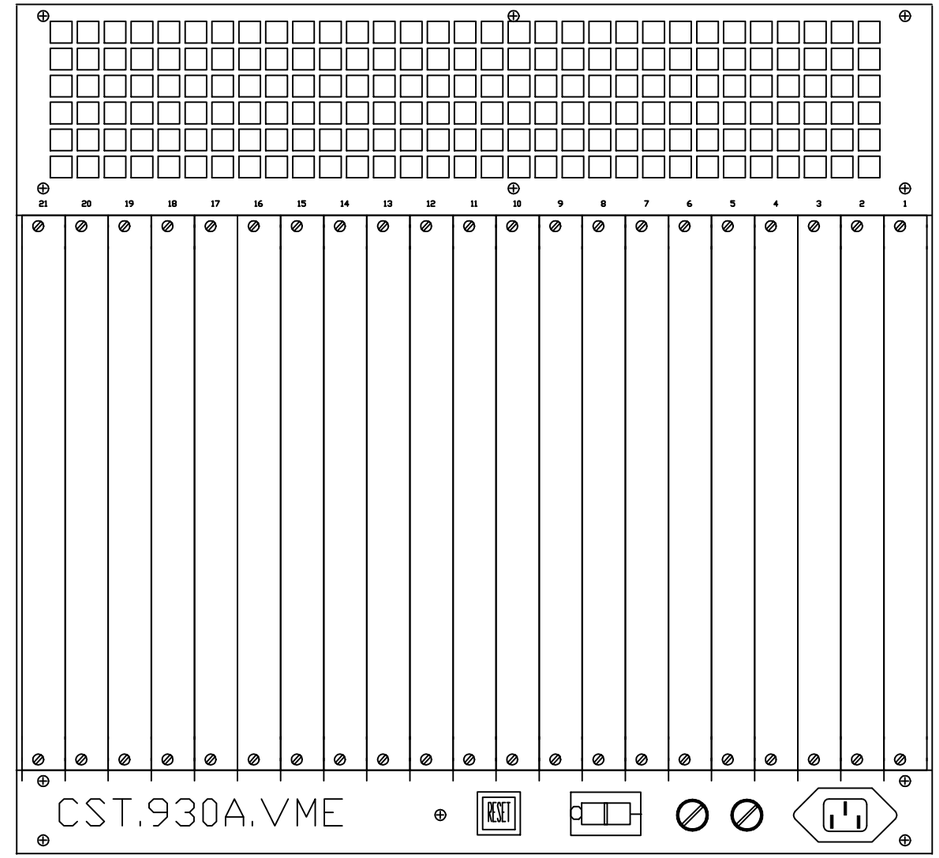

REAR VIEW

NOTE:

1. ALL UNUSED SLOTS, FRONT AND REAR

QTY REQD -3	QTY REQD -2	QTY REQD -1	REF DESIGNATOR	ITEM NO.	DESCRIPTION	MAT'L. DWG NO.,SPEC. NO.
		1	SLOT 14	8	2 CHANNEL AGS TO TTL CONVERTER	-
		1	SLOT 15	7	SIS3808 SCALER	-
		2	SLT 20, 21	6	ALLEN BRADLEY 1014D 488 GPIB CONTRLLER	-
		1	SLOT 4	5	V102 DELAY MODULES	94028072
		1	SLOT 3	4	V108 UTILITY MODULE	94028094
		1	SLOT 2	3	MEMORY BOARD	MM-6702
		1	SLOT 1	2	FRONT END COMPUTER	POWER3E
		1	N/A	1	VME CHASSIS	RHIC-93008000

INTERPRET IN GENERAL ACCORDANCE WITH ASME Y14.24M-1989

UNLESS OTHERWISE SPECIFIED DIMENSIONS ARE IN INCHES

DECIMAL TOLERANCES
.X ±.030
.XX ±.015
.XXX ±.005
ANGULAR TOLERANCE ± .5°

NA FINISH

BREAK SHARP EDGES MAX. XX MIN. XX

OUTSTANDING ECN

Q.A. CATEGORY A-3

		DATE
DRAWN BY	Jappe	3/9/2000
CHECKED BY		
DESIGN APPROVAL		
ENGINEER APPROVAL		
SUPVR. APPROVAL		

NEXT ASSEMBLY

BROOKHAVEN NATIONAL LABORATORY
UPTON, N.Y. 11973

CAD CONTROLS

BLDG. 930A RACK 4931

VME CHASSIS CST.930A.VME

SIZE A | DRAWING NUMBER D09-E-RD2798 | REV. A

MATERIAL: ——— SCALE: NA WEIGHT: - SHEET 2

*AUTOCAD

REV.	ZONE	ECN NO.	DATE	BY	CKR	APP.

BNL, BNL 12/28/00 3:24 PM D09-E-RD2799.dwg

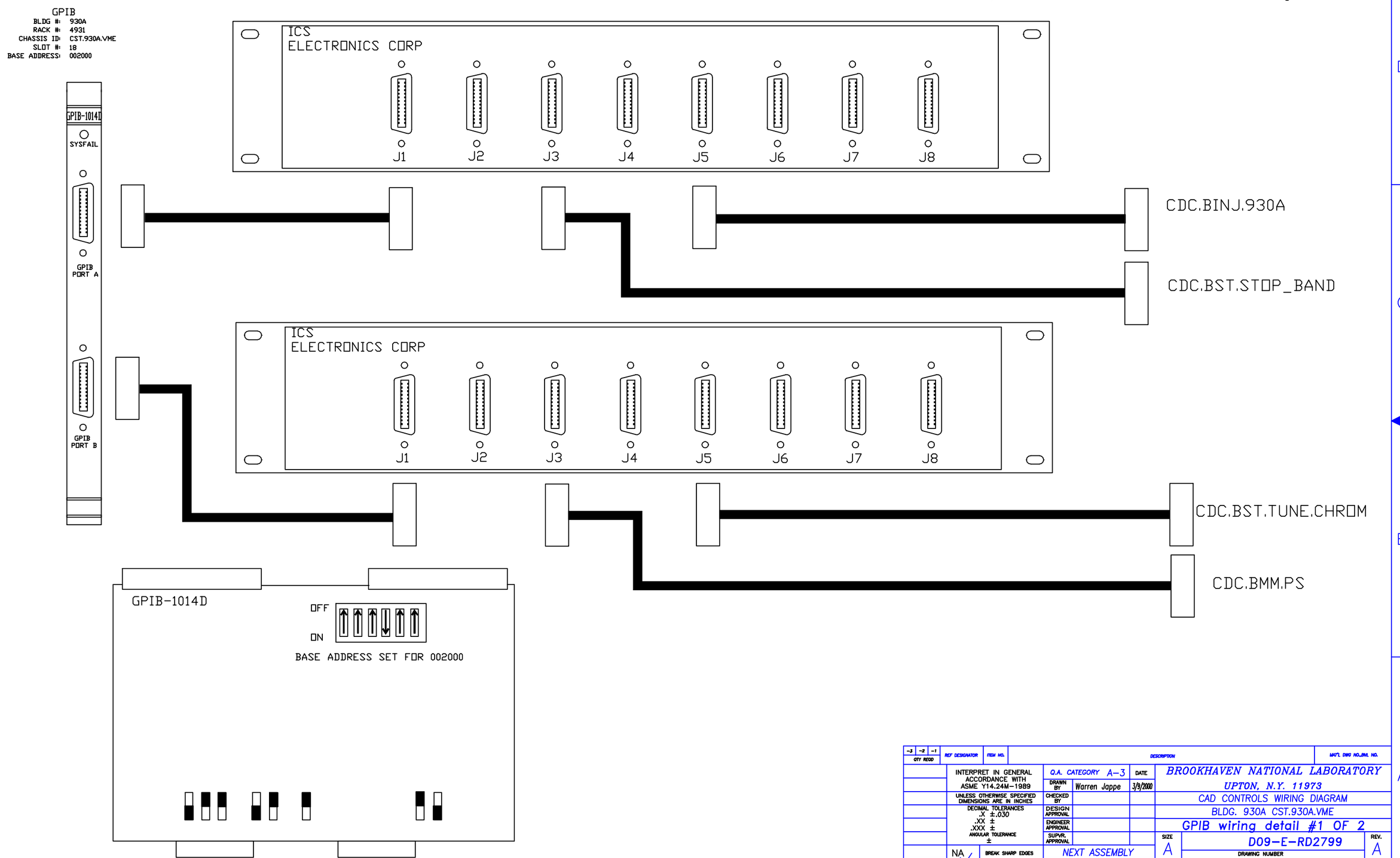

-3	-2	-1	REF DESIGNATOR	ITEM NO.	DESCRIPTION	MAT'L DWG NO.,BNL NO.
QTY REQD						

INTERPRET IN GENERAL ACCORDANCE WITH ASME Y14.24M-1989

UNLESS OTHERWISE SPECIFIED DIMENSIONS ARE IN INCHES

DECIMAL TOLERANCES
.X ±.030
.XX ±
.XXX ±
ANGULAR TOLERANCE
±

NA FINISH

BREAK SHARP EDGES
MAX. XX MIN. XX

OUTSTANDING ECN

Q.A. CATEGORY A-3		DATE
DRAWN BY	Warren Jappe	3/9/2000
CHECKED BY		
DESIGN APPROVAL		
ENGINEER APPROVAL		
SUPVR. APPROVAL		

NEXT ASSEMBLY

BROOKHAVEN NATIONAL LABORATORY
UPTON, N.Y. 11973

CAD CONTROLS WIRING DIAGRAM

BLDG. 930A CST.930A.VME

GPIB wiring detail #1 OF 2

SIZE A — DRAWING NUMBER D09-E-RD2799 — REV. A

MATERIAL: n/a SCALE: n/a WEIGHT: - SHEET 7

1 *AUTOCAD

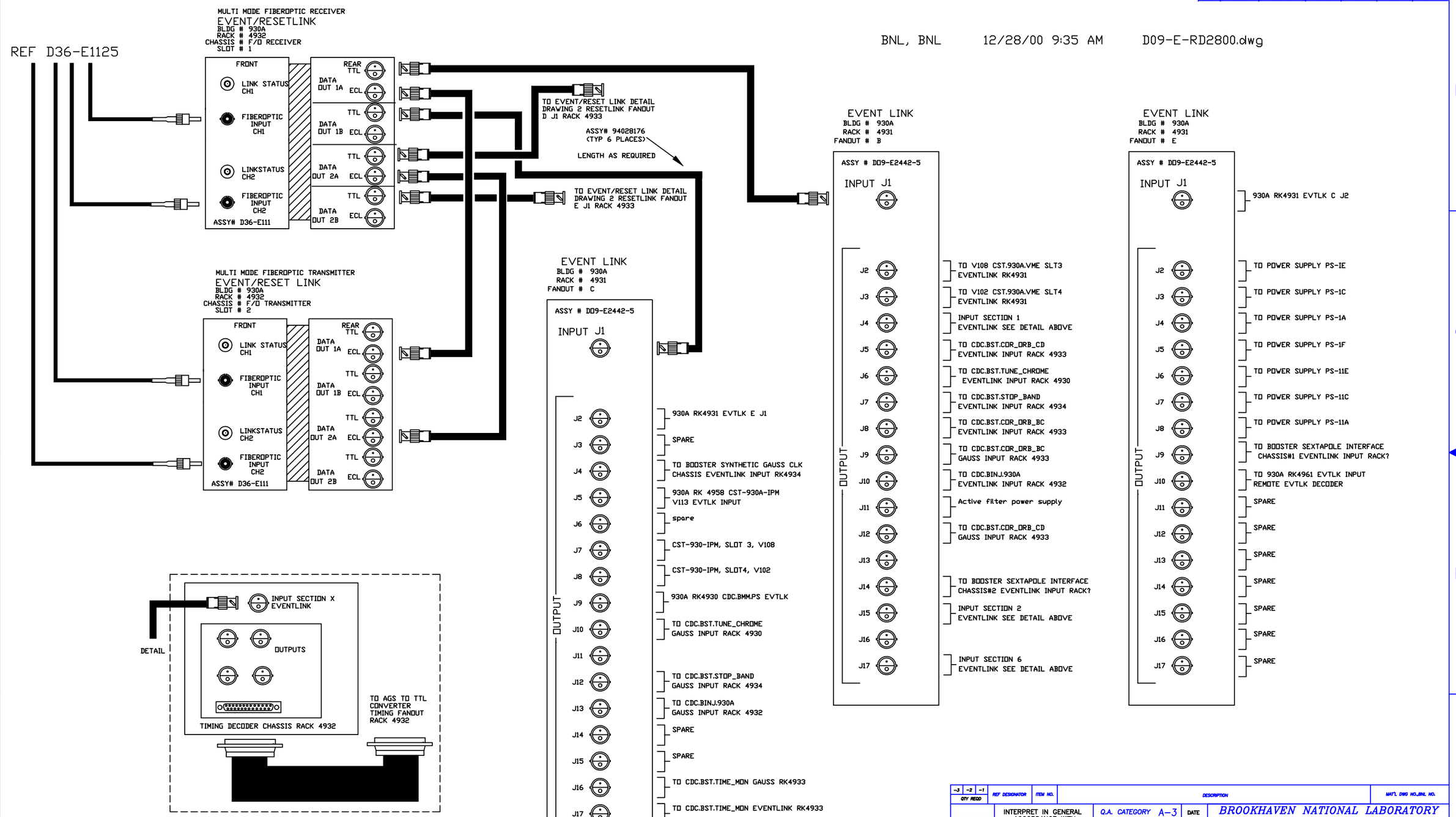

REV.	ZONE	ECN NO.	DATE	BY	CKR	APP.

-3	-2	-1	REF DESIGNATOR	ITEM NO.	DESCRIPTION	MAT'L. DWG NO.,BNL NO.
QTY REQD						

INTERPRET IN GENERAL ACCORDANCE WITH ASME Y14.24M-1989

UNLESS OTHERWISE SPECIFIED DIMENSIONS ARE IN INCHES

DECIMAL TOLERANCES
.X ±.030
.XX ±.015
.XXX ±.005
ANGULAR TOLERANCE ± .5°

NA FINISH

BREAK SHARP EDGES MAX. XX MIN. XX

OUTSTANDING ECN

Q.A. CATEGORY A-3		DATE
DRAWN BY	Warren Jappe	3/2/00
CHECKED BY		
DESIGN APPROVAL		
ENGINEER APPROVAL		
SUPVR. APPROVAL		

NEXT ASSEMBLY

BROOKHAVEN NATIONAL LABORATORY
UPTON, N.Y. 11973

CAD WIRING DIAGRAM

930A CST.930A.VME

EVENT/RESET LINK DETAIL 1 of 2

SIZE A | DRAWING NUMBER D09-E-RD2800 | REV. A

MATERIAL: ——— SCALE: NA WEIGHT: – SHEET 4

*AUTOCAD

REV.	ZONE	ECN NO.	DATE	BY	CKR	APP.

BNL, BNL 12/28/00 9:37 AM D09-E-RD2801.dwg

RESET LINK
BLDG # 930A
RACK # 4931
FANOUT # D

ASSY # D09-E2442-5

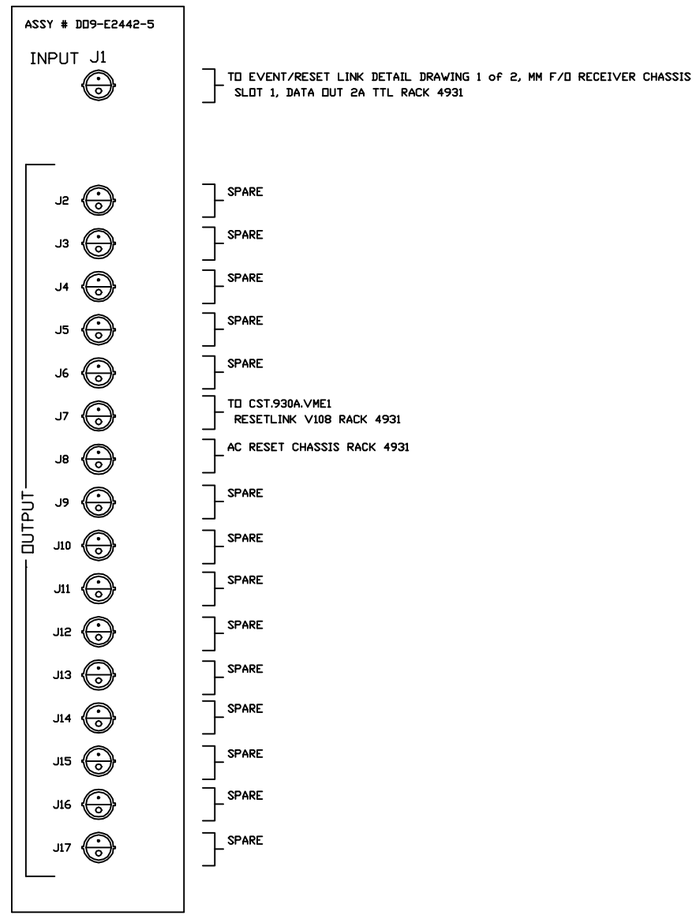

-3	-2	-1	REF DESIGNATOR	ITEM NO.	DESCRIPTION	MAT'L DWG NO.,BNL NO.
QTY REQD						

INTERPRET IN GENERAL ACCORDANCE WITH ASME Y14.24M-1989

UNLESS OTHERWISE SPECIFIED DIMENSIONS ARE IN INCHES

DECIMAL TOLERANCES
.X ±.030
.XX ±.015
.XXX ±.005
ANGULAR TOLERANCE
± .5'

OUTSTANDING ECN

NA FINISH

BREAK SHARP EDGES
MAX. XX MIN. XX

Q.A. CATEGORY A-3		DATE
DRAWN BY	Warren Jappe	3/2/00
CHECKED BY		
DESIGN APPROVAL		
ENGINEER APPROVAL		
SUPVR. APPROVAL		

NEXT ASSEMBLY

BROOKHAVEN NATIONAL LABORATORY
UPTON, N.Y. 11973

CAD WIRING DIAGRAM

930A CST.930A.VME

EVENT/RESET LINK DETAIL 2 of 2

SIZE A | DRAWING NUMBER D09-E-RD2801 | REV. A

MATERIAL: ——— SCALE: NA WEIGHT: — SHEET 5

*AUTOCAD

BNL, BNL 12/28/00 9:39 AM D09-E-RD2802.dwg

REV.	ZONE	ECN NO.	DATE	BY	CKR	APP.

FRONT END COMPUTER
BLDG #: 930A
RACK #: 4931
CHASSIS ID: CST.930A.VME
SLOT#: 1
FEC NAME: CST.930A.VME

DEVICE: MM-6702 MEMORY MODULE
BLDG #: 930A
RACK #: 4931
CHASSIS ID: CST.930A.VME
SLOT #: 2
A24 BASE ADDRESS: XXX

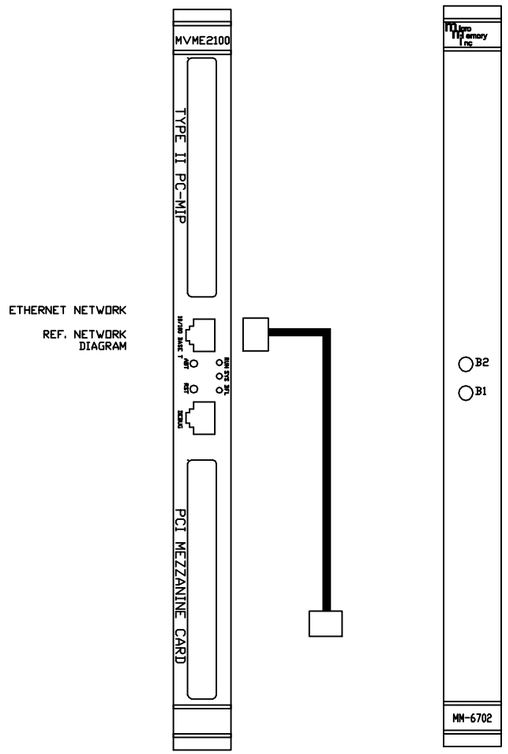

JUMPER LIST
1. REMOVE E1.
2. INSTALL E15.
3. SW3 CLOSE ALL POSITIONS.
4. SW2 CLOSE POSITIONS 7 AND 8.
5. SW1 CLOSE POSITIONS 2-8.
6. INSTALL E14 AND E25 TO ENABLE BATTERIES

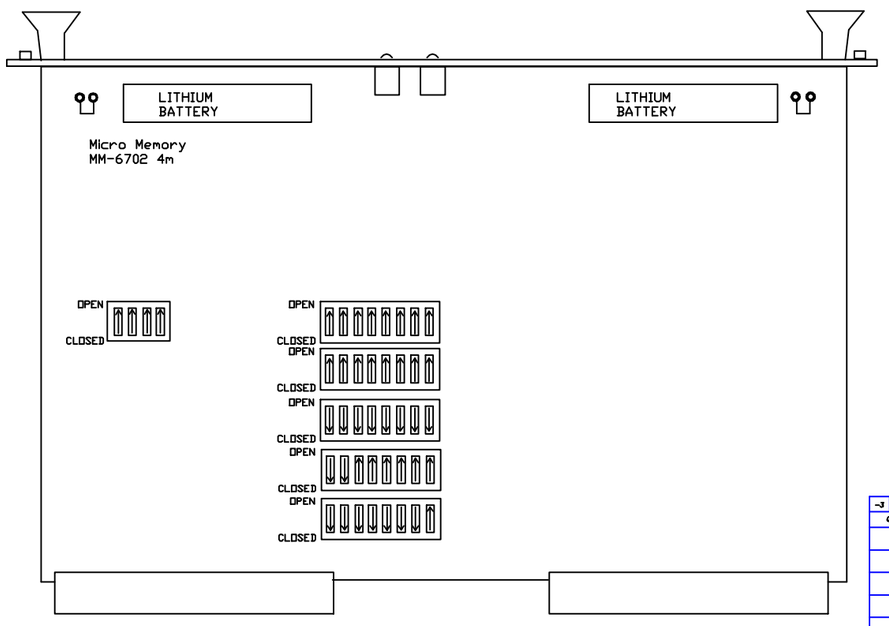

DEVICE: V108 UTILITY MODULE
BLDG #: 930A
RACK #: 4931
CHASSIS ID: CST.930A.VME
SLOT #: 3
A24 BASE ADDRESS: 0XF0004000

JUMPER LIST

E25 through E30 are configured for remote reset address at the time of board acceptance test.
DO NOT MODIFY!

Remote reset pulls VME SYS Reset.
E58-E60, E59-E61

A24 BASE ADDRESS= 4000h
E57-E13, E2-E14, E3-E15, E4-E16, E5-E17, E6-E18
E7-E19, E8-E20, E9-E21, E10-E22, E11-E24, E57-E23
SW1=OPEN
SW2=CLOSED
SW3=OPEN
SW4=OPEN

EVENT LINK
BLDG #: 930A
RACK #: 4931
FANOUT #: B

RESET LINK
BLDG #: 930A
RACK #: 4931
FANOUT #: D

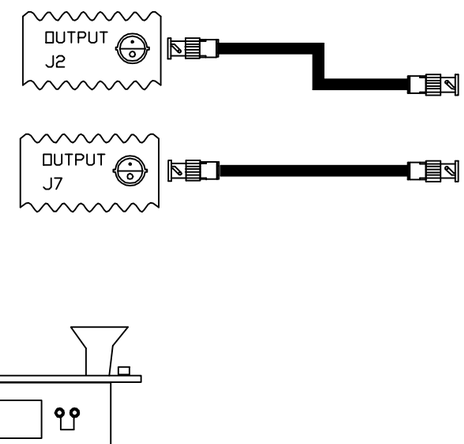

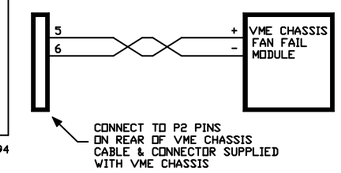

-3	-2	-1	REF DESIGNATOR	ITEM NO.	DESCRIPTION	MAT'L. DWG NO.,BRL NO.
QTY REQD						

INTERPRET IN GENERAL ACCORDANCE WITH ASME Y14.24M-1989
UNLESS OTHERWISE SPECIFIED DIMENSIONS ARE IN INCHES
DECIMAL TOLERANCES .X ±.XXX .XX ±.XXX .XXX ±.XXX
ANGULAR TOLERANCE ± .XXX
OUTSTANDING ECN
NA FINISH
BREAK SHARP EDGES MAX. XX MIN. XX

Q.A. CATEGORY A-3
DRAWN BY Jappe DATE 2/3/2000
CHECKED BY
DESIGN APPROVAL
ENGINEER APPROVAL
SUPVR. APPROVAL
NEXT ASSEMBLY

BROOKHAVEN NATIONAL LABORATORY
ASSOCIATED UNIVERSITIES, INC.
UPTON, N.Y. 11973

CAD WIRING DIAGRAM
930A VME CHASSIS CST.930A.VME
CPU/MEMORY /V108 UTIL MODULE

SIZE A | DRAWING NUMBER D09-E-RD2802 | REV. A
MATERIAL: —— SCALE: NA WEIGHT: — SHEET 6

1 *AUTOCAD

BNL, BNL 12/28/00 9:33 AM D09-E-RD2803.dwg

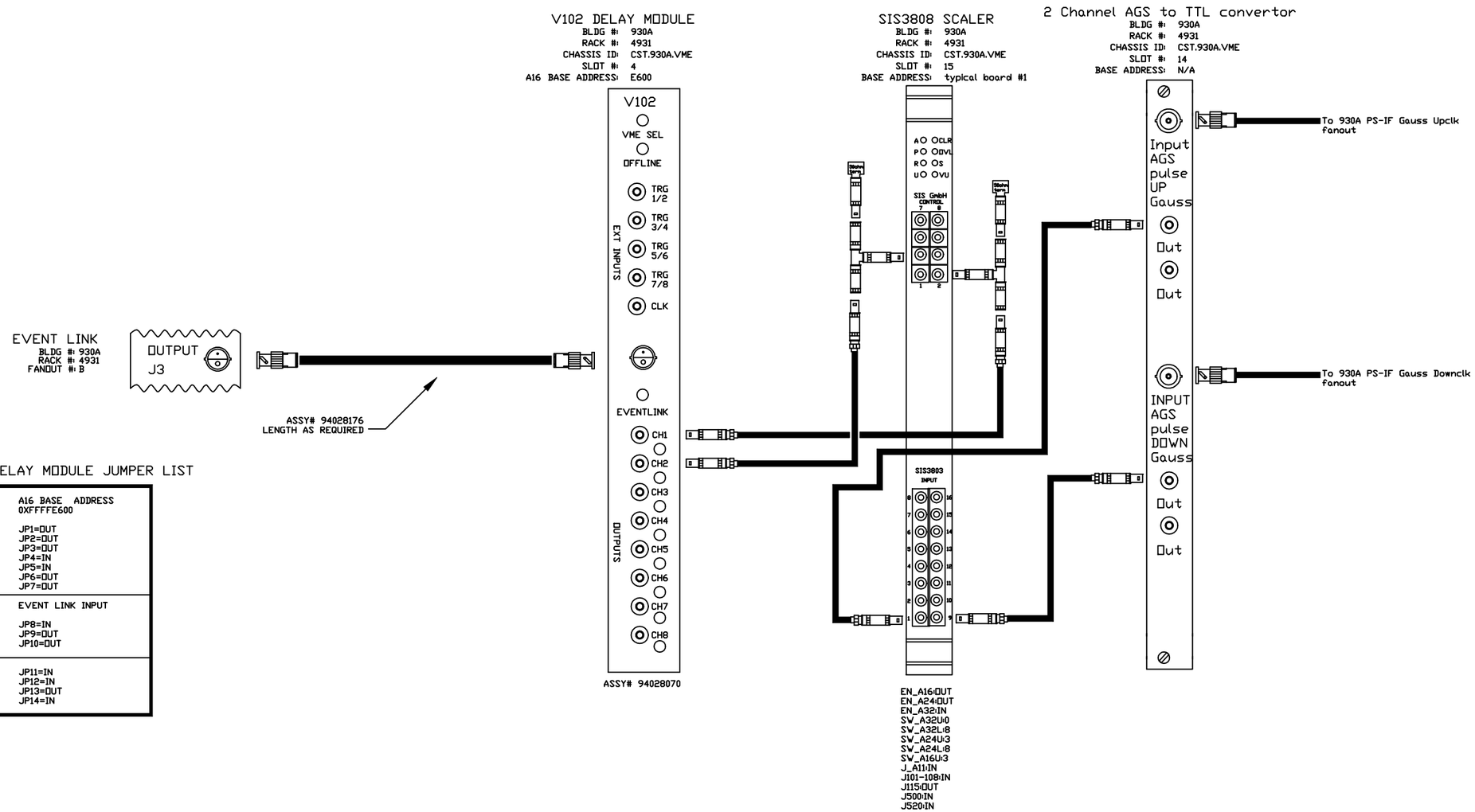

V102 DELAY MODULE JUMPER LIST

A16 BASE ADDRESS 0XFFFFE600 JP1=OUT JP2=OUT JP3=OUT JP4=IN JP5=IN JP6=OUT JP7=OUT
EVENT LINK INPUT JP8=IN JP9=OUT JP10=OUT
JP11=IN JP12=IN JP13=OUT JP14=IN

-3	-2	-1	REF DESIGNATOR	ITEM NO.	DESCRIPTION	MAT'L. DWG NO.,BNL NO.
QTY REQD						

INTERPRET IN GENERAL ACCORDANCE WITH ASME Y14.24M-1989

UNLESS OTHERWISE SPECIFIED DIMENSIONS ARE IN INCHES

DECIMAL TOLERANCES
.X ±.XXX
.XX ±.XXX
.XXX ±.XXX
ANGULAR TOLERANCE ± XXX

NA FINISH

BREAK SHARP EDGES MAX. XX MIN. XX

OUTSTANDING ECN

Q.A. CATEGORY A-3

		DATE
DRAWN BY	Warren Jappe	2/3/2000
CHECKED BY		
DESIGN APPROVAL		
ENGINEER APPROVAL		
SUPVR. APPROVAL		

NEXT ASSEMBLY

BROOKHAVEN NATIONAL LABORATORY
UPTON, N.Y. 11973

CAD WIRING DIAGRAM

BLDG.930A CHASSIS CST.930A.VME

V102 DELAY MODULE

SIZE A | D09-E-RD2803 | REV. A

DRAWING NUMBER

MATERIAL: ——— SCALE: NA WEIGHT: SHEET 3

1 *AUTOCAD

REV.	ZONE	ECN NO.	DATE	BY	CKR	APP.

BNL, BNL 12/28/00 3:22 PM D09-E-RD2841.dwg

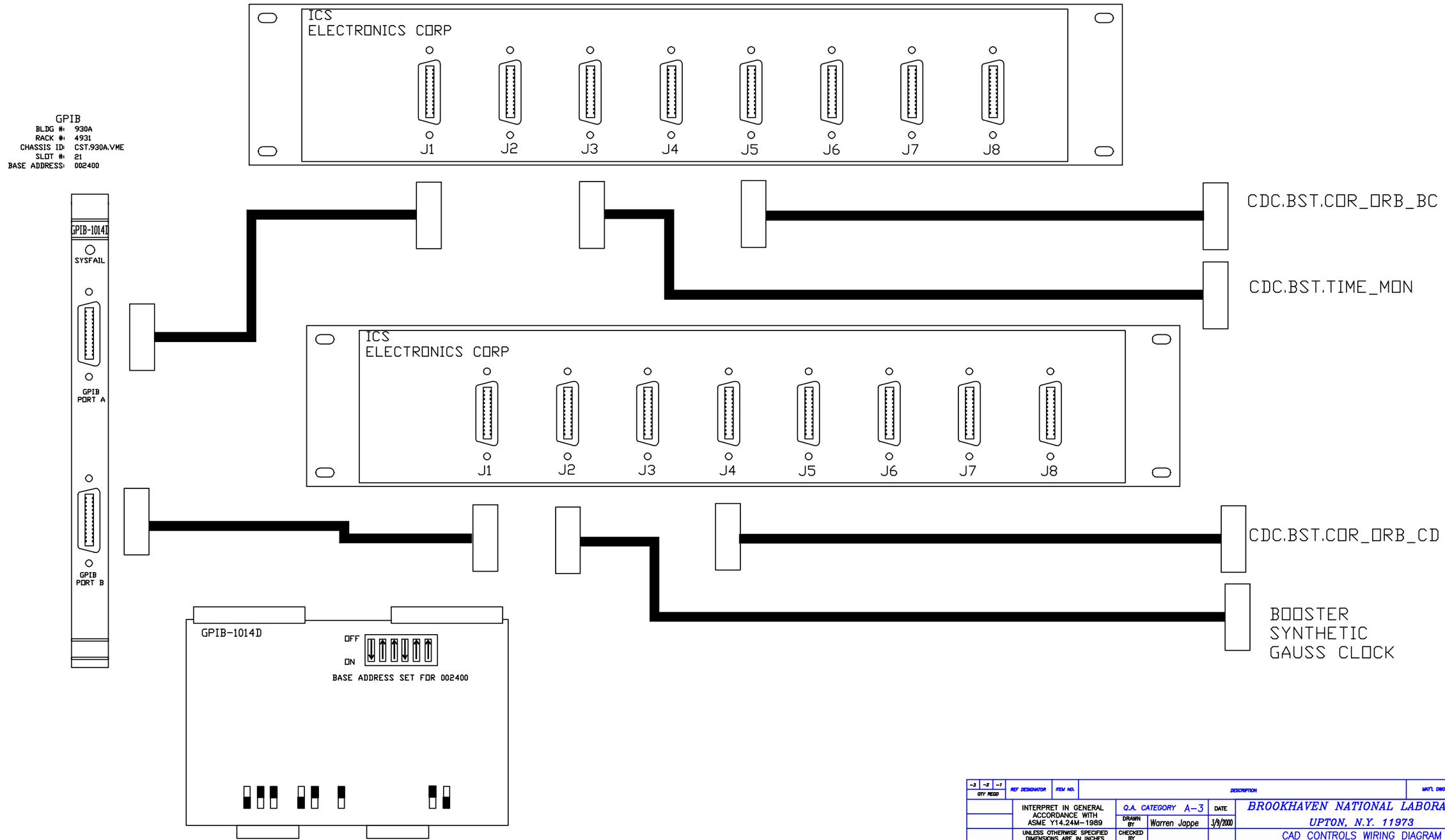

-3	-2	-1	REF DESIGNATOR	ITEM NO.	DESCRIPTION	MAT'L DWG NO./BNL NO.
QTY REQD						

INTERPRET IN GENERAL ACCORDANCE WITH ASME Y14.24M-1989

UNLESS OTHERWISE SPECIFIED DIMENSIONS ARE IN INCHES

DECIMAL TOLERANCES
.X ±.030
.XX ±
.XXX ±
ANGULAR TOLERANCE
±

OUTSTANDING ECN

NA FINISH

BREAK SHARP EDGES
MAX. XX MIN. XX

Q.A. CATEGORY A-3

		DATE
DRAWN BY	Warren Jappe	3/9/2000
CHECKED BY		
DESIGN APPROVAL		
ENGINEER APPROVAL		
SUPVR. APPROVAL		

NEXT ASSEMBLY

BROOKHAVEN NATIONAL LABORATORY
UPTON, N.Y. 11973

CAD CONTROLS WIRING DIAGRAM

BLDG. 930A CST.930A.VME

GPIB wiring detail #2 OF 2

SIZE A | D09-E-RD2841 | REV. A

DRAWING NUMBER

MATERIAL: n/a SCALE: n/a WEIGHT: - SHEET 8

*AUTOCAD