| REV. | ZONE | ECN NO. | DATE | BY | CKR | APP. |
|---|---|---|---|---|---|---|

BNL, BNL 12/28/00 8:50 AM D09-E-RD2790.dwg

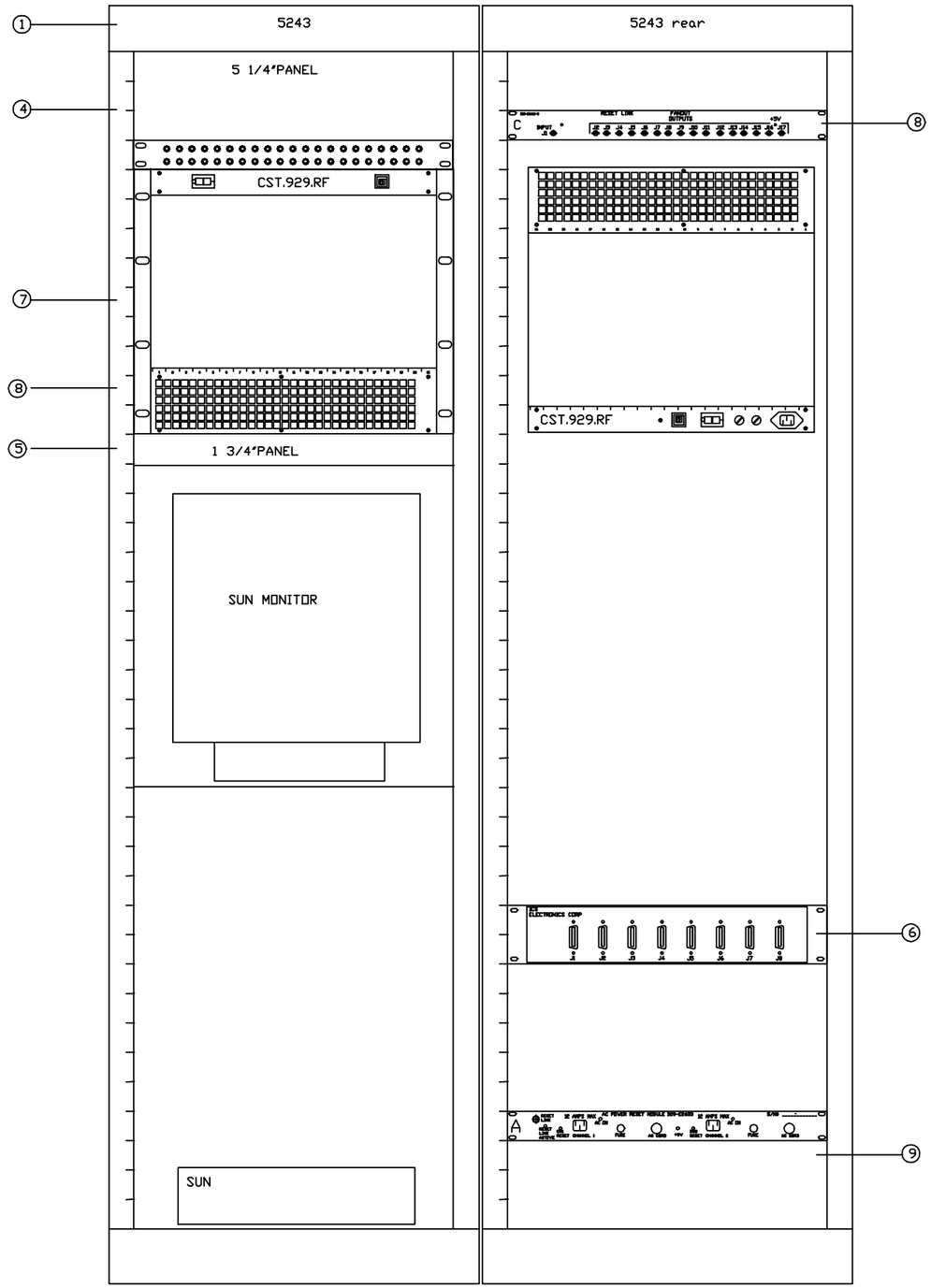


CONTROLLER LIST

CDC.GS.AUXRF
LLRF DEVICE CONTROLLER

| QTY REQD -3 | QTY REQD -2 | QTY REQD -1 | REF DESIGNATOR | ITEM NO. | DESCRIPTION | MAT'L. DWG NO.,BNL NO. |
|---|---|---|---|---|---|---|
| | | 1 | 9 | 8 | AC RESET MODULE | |
| | | 1 | 8 | 7 | EVENT/RESET LINK MODULE | |
| | | 1 | 6 | 6 | 488 FANOUT | |
| | | 1 | 5 | 5 | 1 3/4" BLANK PANEL | |
| | | 1 | 4 | 4 | 5 1/4" BLANK PANEL | |
| | | 1 | 3 | 3 | 6U VME CHASSIS CST.929.RF | |
| | | 1 | 2 | 2 | GROMMET PANEL | |
| | | 1 | 1 | 1 | 70" RACK | |

INTERPRET IN GENERAL ACCORDANCE WITH ASME Y14.24M-1989

UNLESS OTHERWISE SPECIFIED DIMENSIONS ARE IN INCHES
DECIMAL TOLERANCES
.X ±.030
.XX ±.015
.XXX ±.005
ANGULAR TOLERANCE
± .5°

OUTSTANDING ECN

NA FINISH

BREAK SHARP EDGES
MAX. XX MIN. XX

| | | |
|---|---|---|
| Q.A. CATEGORY A-3 | | DATE |
| DRAWN BY | JAPPE | 2/3/2000 |
| CHECKED BY | | |
| DESIGN APPROVAL | | |
| ENGINEER APPROVAL | | |
| SUPVR. APPROVAL | | |

NEXT ASSEMBLY

BROOKHAVEN NATIONAL LABORATORY
UPTON, N.Y. 11973
CA Division
929RFRack Layout
CST.929.RF

SIZE A | DRAWING NUMBER D09-E-RD2790 | REV. A

MATERIAL: ——— | SCALE: FULL | WEIGHT: – | SHEET 1

1 *AUTOCAD

| REV. | ZONE | ECN NO. | DATE | BY | CKR | APP. |
|---|---|---|---|---|---|---|

BNL, BNL 12/28/00 8:52 AM D09-E-RD2791.dwg

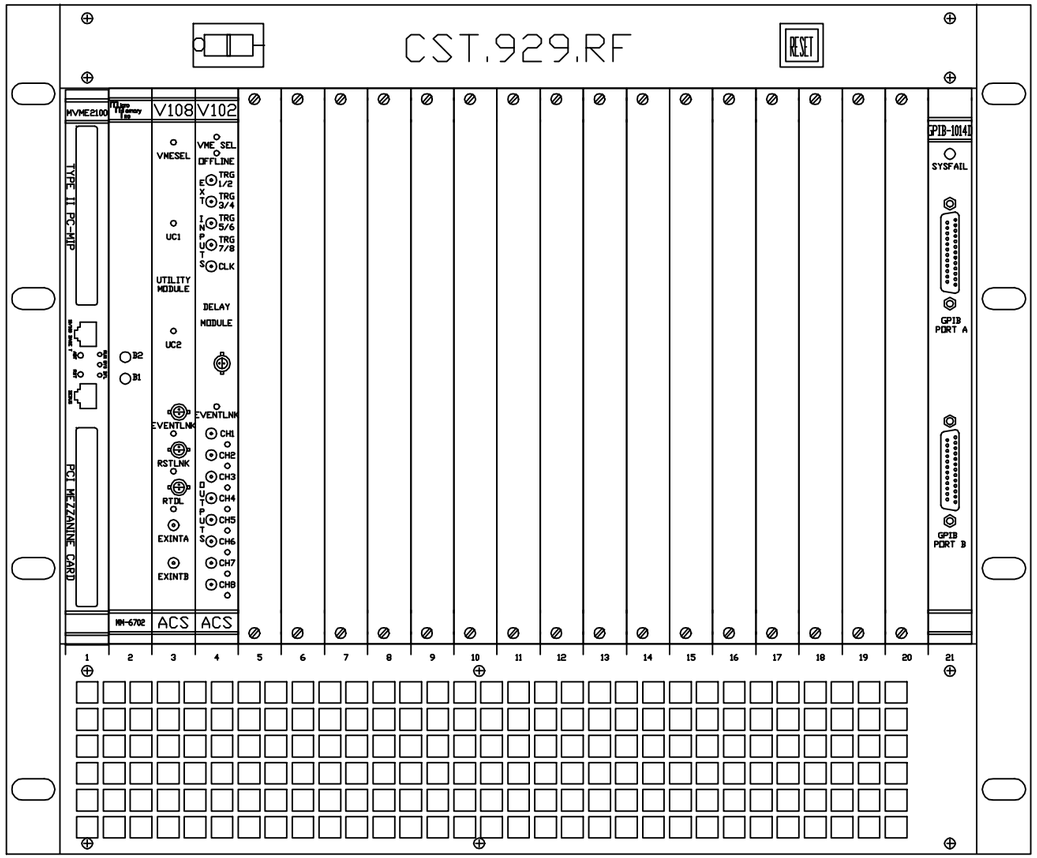


FRONT VIEW

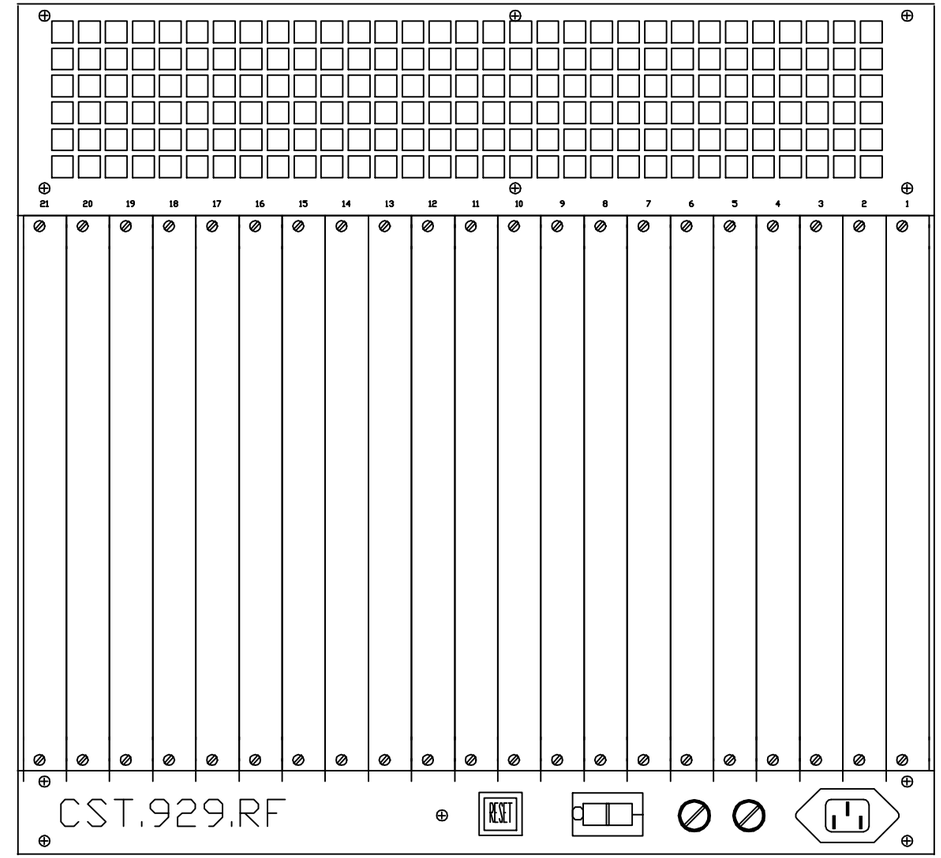


REAR VIEW

NOTE:

1. ALL UNUSED SLOTS, FRONT AND REAR

| -3 | -2 | -1 | REF DESIGNATOR | ITEM NO. | DESCRIPTION | MAT'L DWG NO.,BNL NO. |
|---|---|---|---|---|---|---|
| | | - | - | - | - | - |
| | | 1 | SLOT 21 | 6 | ALLEN BRADLEY 1014D 488 GPIB CONTRLLER | - |
| | | 1 | SLOT 4 | 5 | V102 DELAY MODULES | 94028072 |
| | | 1 | SLOT 3 | 4 | V108 UTILITY MODULE | 94028094 |
| | | 1 | SLOT 2 | 3 | MEMORY BOARD | MM-6702 |
| | | 1 | SLOT 1 | 2 | FRONT END COMPUTER | POWER3E |
| | | 1 | N/A | 1 | VME CHASSIS | RHIC-93008000 |

QTY REQD

INTERPRET IN GENERAL ACCORDANCE WITH ASME Y14.24M-1989

UNLESS OTHERWISE SPECIFIED DIMENSIONS ARE IN INCHES

DECIMAL TOLERANCES
.X ±.030
.XX ±.015
.XXX ±.005
ANGULAR TOLERANCE
± .5°

OUTSTANDING ECN

NA FINISH

BREAK SHARP EDGES
MAX. XX MIN. XX

Q.A. CATEGORY A-3

| | | DATE |
|---|---|---|
| DRAWN BY | Jappe | 3/24/2000 |
| CHECKED BY | | |
| DESIGN APPROVAL | | |
| ENGINEER APPROVAL | | |
| SUPVR. APPROVAL | | |

NEXT ASSEMBLY

BROOKHAVEN NATIONAL LABORATORY
UPTON, N.Y. 11973

CAD CONTROLS

BLDG. 929RF RACK 5243

VME CHASSIS CST.929.RF

SIZE A | DRAWING NUMBER D09-E-RD2791 | REV. A

MATERIAL: ——— SCALE: NA WEIGHT: - SHEET 2

*AUTOCAD

BNL, BNL 12/28/00 8:53 AM D09-E-RD2792.dwg

| REV. | ZONE | ECN NO. | DATE | BY | CKR | APP. |
|---|---|---|---|---|---|---|

FRONT END COMPUTER
BLDG #: 929RF
RACK #: 5243
CHASSIS ID: CST.929.RF
SLOT#: 1
FEC NAME: CST.929.RF

DEVICE: MM-6702 MEMORY MODULE
BLDG #: 929RF
RACK #: 5243
CHASSIS ID: CST.929.RF
SLOT #: 2
A24 BASE ADDRESS: XXX

DEVICE: V108 UTILITY MODULE
BLDG #: 929RF
RACK #: 5243
CHASSIS ID: CST.929.RF
SLOT #: 3
A24 BASE ADDRESS: 0XF0004000

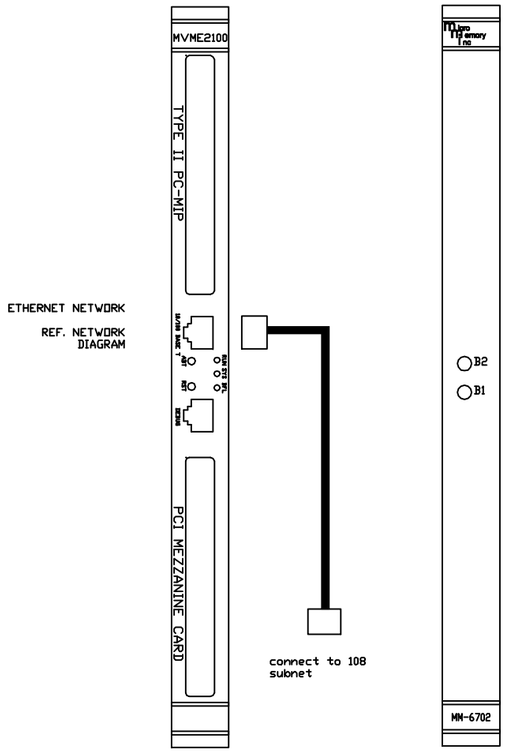


JUMPER LIST
1. REMOVE E1.
2. INSTALL E15.
3. SW3 CLOSE ALL POSITIONS.
4. SW2 CLOSE POSITIONS 7 AND 8.
5. SW1 CLOSE POSITIONS 2-8.
6. INSTALL E14 AND E25 TO ENABLE BATTERIES

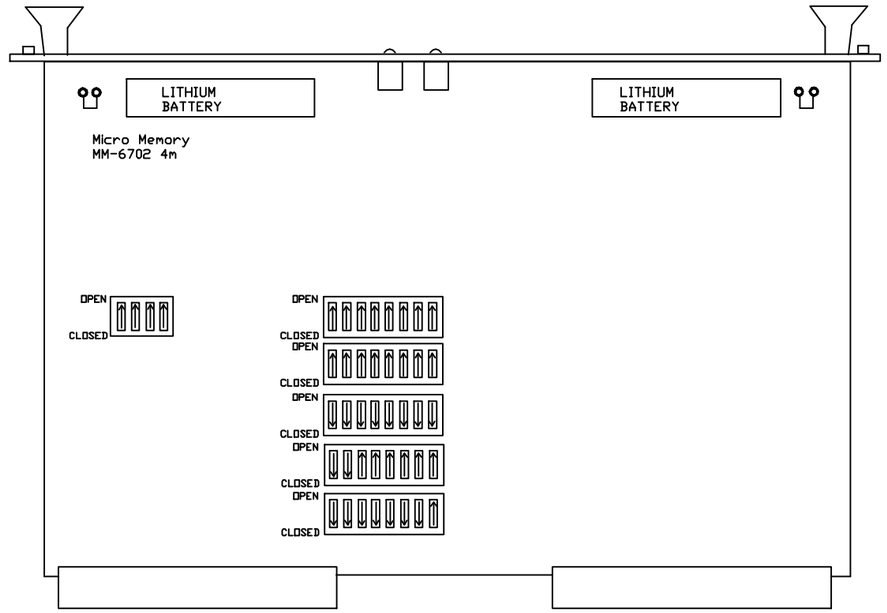


JUMPER LIST

E25 through E50 are configured for remote reset address at the time of board acceptance test.
DO NOT MODIFY!

Remote reset pulls VME SYS Reset.
E58-E60, E59-E61

A24 BASE ADDRESS= 4000h
E57-E13, E2-E14, E3-E15, E4-E16, E5-E17, E6-E18
E7-E19, E8-E20, E9-E21, E10-E22, E11-E24, E57-E23
SW1=OPEN
SW2=CLOSED
SW3=OPEN
SW4=OPEN

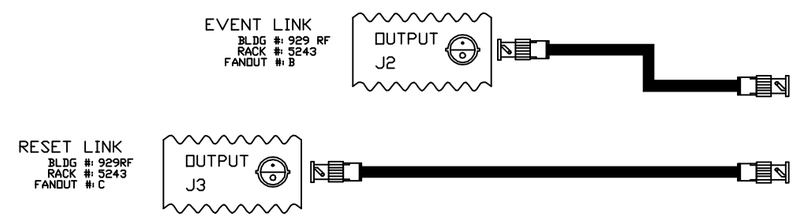


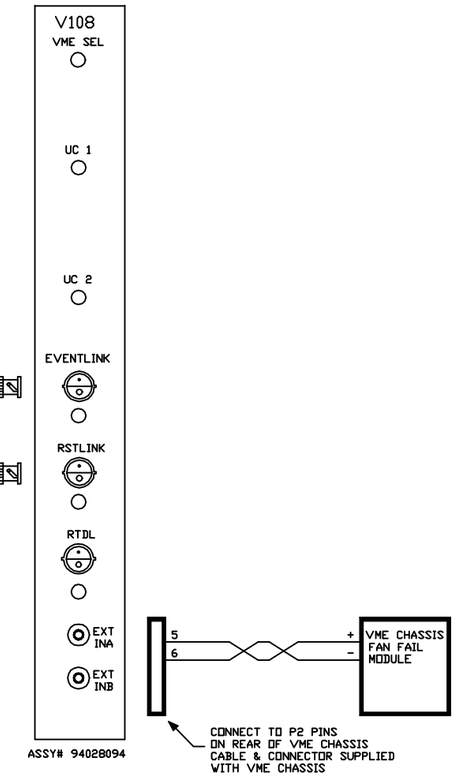


| -3 | -2 | -1 | REF DESIGNATOR | ITEM NO. | DESCRIPTION | MAT'L DWG NO./BNL NO. |
|---|---|---|---|---|---|---|
| QTY REQD | | | | | | |

INTERPRET IN GENERAL ACCORDANCE WITH ASME Y14.24M-1989
UNLESS OTHERWISE SPECIFIED DIMENSIONS ARE IN INCHES
DECIMAL TOLERANCES .X ±XXX .XX ±XXX .XXX ±XXX
ANGULAR TOLERANCE ± XXX
OUTSTANDING ECN
NA FINISH
BREAK SHARP EDGES MAX. XX MIN. XX

Q.A. CATEGORY A-3
DRAWN BY Jappe DATE 2/3/2000
CHECKED BY
DESIGN APPROVAL
ENGINEER APPROVAL
SUPVR. APPROVAL
NEXT ASSEMBLY

BROOKHAVEN NATIONAL LABORATORY
ASSOCIATED UNIVERSITIES, INC.
UPTON, N.Y. 11973

CAD WIRING DIAGRAM
929RF VME CHASSIS CST.929.RF
CPU/MEMORY /V108 UTIL MODULE

SIZE A
DRAWING NUMBER D09-E-RD2792
REV. A
MATERIAL: ——— SCALE: NA WEIGHT: – SHEET 3

*AUTOCAD

| REV. | ZONE | ECN NO. | DATE | BY | CKR | APP. |
|---|---|---|---|---|---|---|

BNL, BNL 12/28/00 8:56 AM D09-E-RD2793.dwg

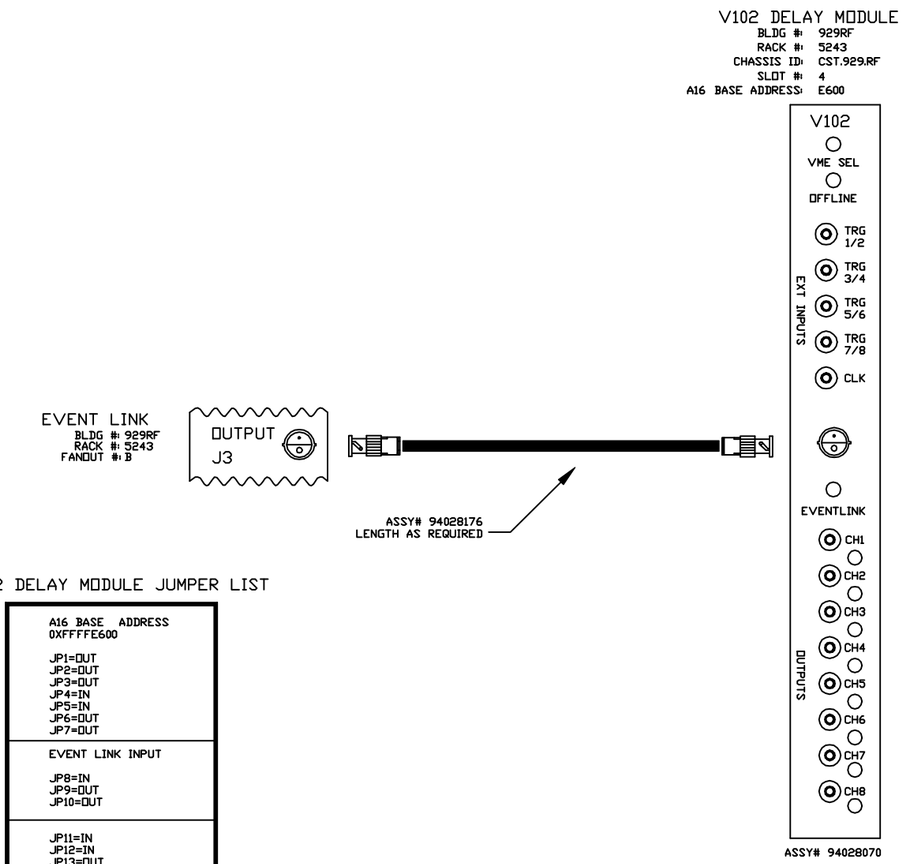


V102 DELAY MODULE JUMPER LIST

| |
|---|
| A16 BASE ADDRESS<br>0XFFFFE600<br><br>JP1=OUT<br>JP2=OUT<br>JP3=OUT<br>JP4=IN<br>JP5=IN<br>JP6=OUT<br>JP7=OUT |
| EVENT LINK INPUT<br><br>JP8=IN<br>JP9=OUT<br>JP10=OUT |
| JP11=IN<br>JP12=IN<br>JP13=OUT<br>JP14=IN |

| -3 | -2 | -1 | REF DESIGNATOR | ITEM NO. | DESCRIPTION | MAT'L DWG NO.,BNL NO. |
|---|---|---|---|---|---|---|
| QTY REQD | | | | | | |

INTERPRET IN GENERAL ACCORDANCE WITH ASME Y14.24M-1989

UNLESS OTHERWISE SPECIFIED DIMENSIONS ARE IN INCHES

DECIMAL TOLERANCES
.X ±XXX
.XX ±XXX
.XXX ±XXX
ANGULAR TOLERANCE
± XXX

OUTSTANDING ECN

NA FINISH

BREAK SHARP EDGES
MAX. XX MIN. XX

| | | |
|---|---|---|
| Q.A. CATEGORY A-3 | | DATE |
| DRAWN BY | Warren Jappe | 2/3/2000 |
| CHECKED BY | | |
| DESIGN APPROVAL | | |
| ENGINEER APPROVAL | | |
| SUPVR. APPROVAL | | |

NEXT ASSEMBLY

BROOKHAVEN NATIONAL LABORATORY
UPTON, N.Y. 11973

CAD WIRING DIAGRAM

BLDG.929RF CHASSIS CST.929.RF

V102 DELAY MODULE

SIZE A | DRAWING NUMBER D09-E-RD2793 | REV. A

MATERIAL: ——— SCALE: NA WEIGHT: SHEET 4

*AUTOCAD

| REV. | ZONE | ECN NO. | DATE | BY | CKR | APP. |
|---|---|---|---|---|---|---|

BNL, BNL 12/28/00 9:09 AM D09-E-RD2794.dwg

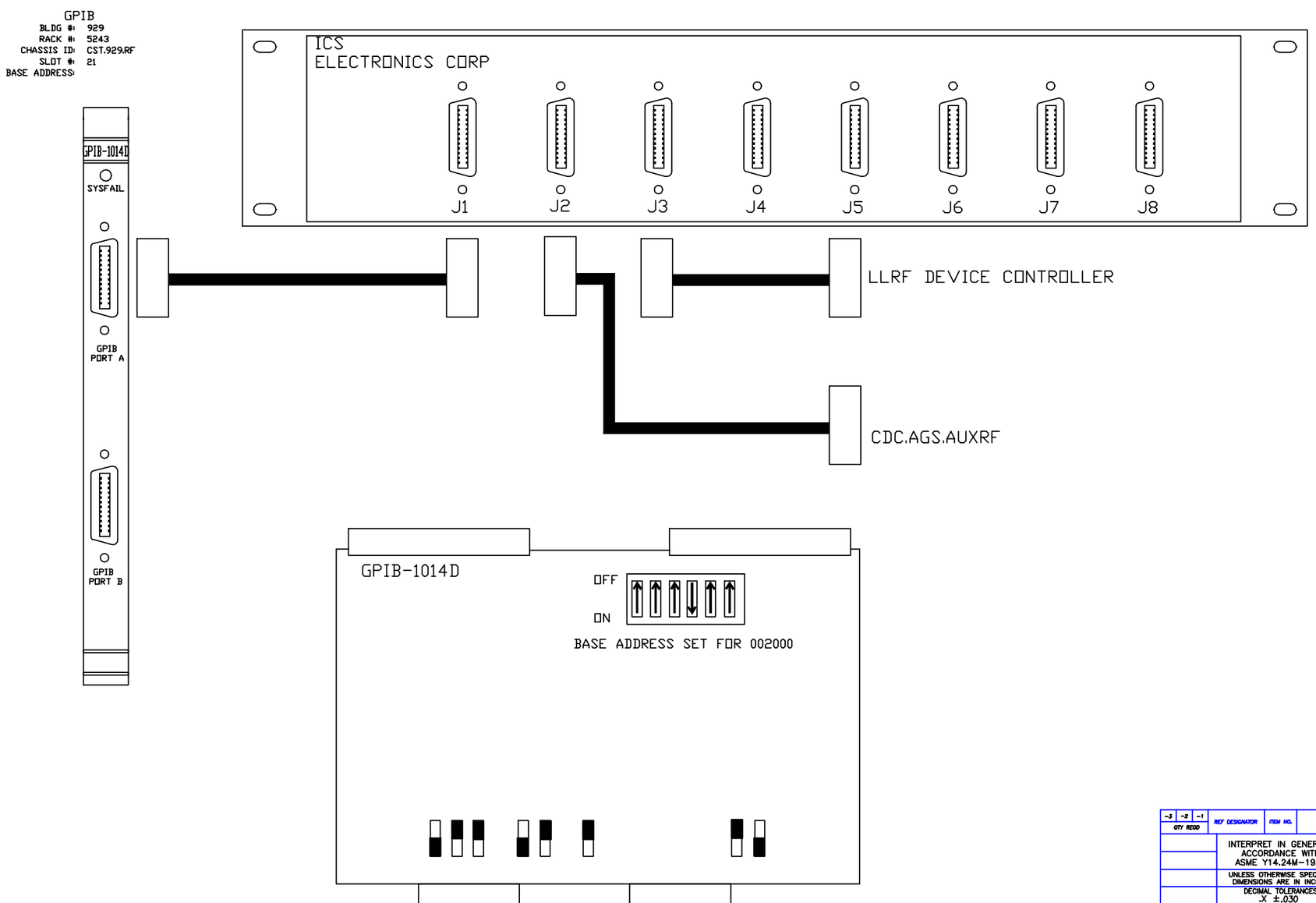


| -3 | -2 | -1 | QTY REQD | REF DESIGNATOR | ITEM NO. | DESCRIPTION | MAT'L DWG NO./BNL NO. |
|---|---|---|---|---|---|---|---|

| | | | |
|---|---|---|---|
| INTERPRET IN GENERAL ACCORDANCE WITH ASME Y14.24M-1989 | Q.A. CATEGORY A-3 | DATE | BROOKHAVEN NATIONAL LABORATORY |
| | DRAWN BY Warren Jappe | 1/25/00 | UPTON, N.Y. 11973 |
| UNLESS OTHERWISE SPECIFIED DIMENSIONS ARE IN INCHES | CHECKED BY | | CAD WIRING DIAGRAM |
| DECIMAL TOLERANCES .X ±.030 .XX ± .XXX ± ANGULAR TOLERANCE ± | DESIGN APPROVAL | | BLDG. 929 CST.929.RF |
| | ENGINEER APPROVAL | | GPIB wiring detail |
| | SUPVR. APPROVAL | | SIZE A / DRAWING NUMBER D09-E-RD2794 / REV. A |
| NA FINISH | BREAK SHARP EDGES MAX. XX MIN. XX | NEXT ASSEMBLY | MATERIAL: n/a SCALE: n/a WEIGHT: - SHEET 5 |
| OUTSTANDING ECN | | | |

*AUTOCAD

BNL, BNL 12/28/00 9:15 AM D09-E-RD2795.dwg

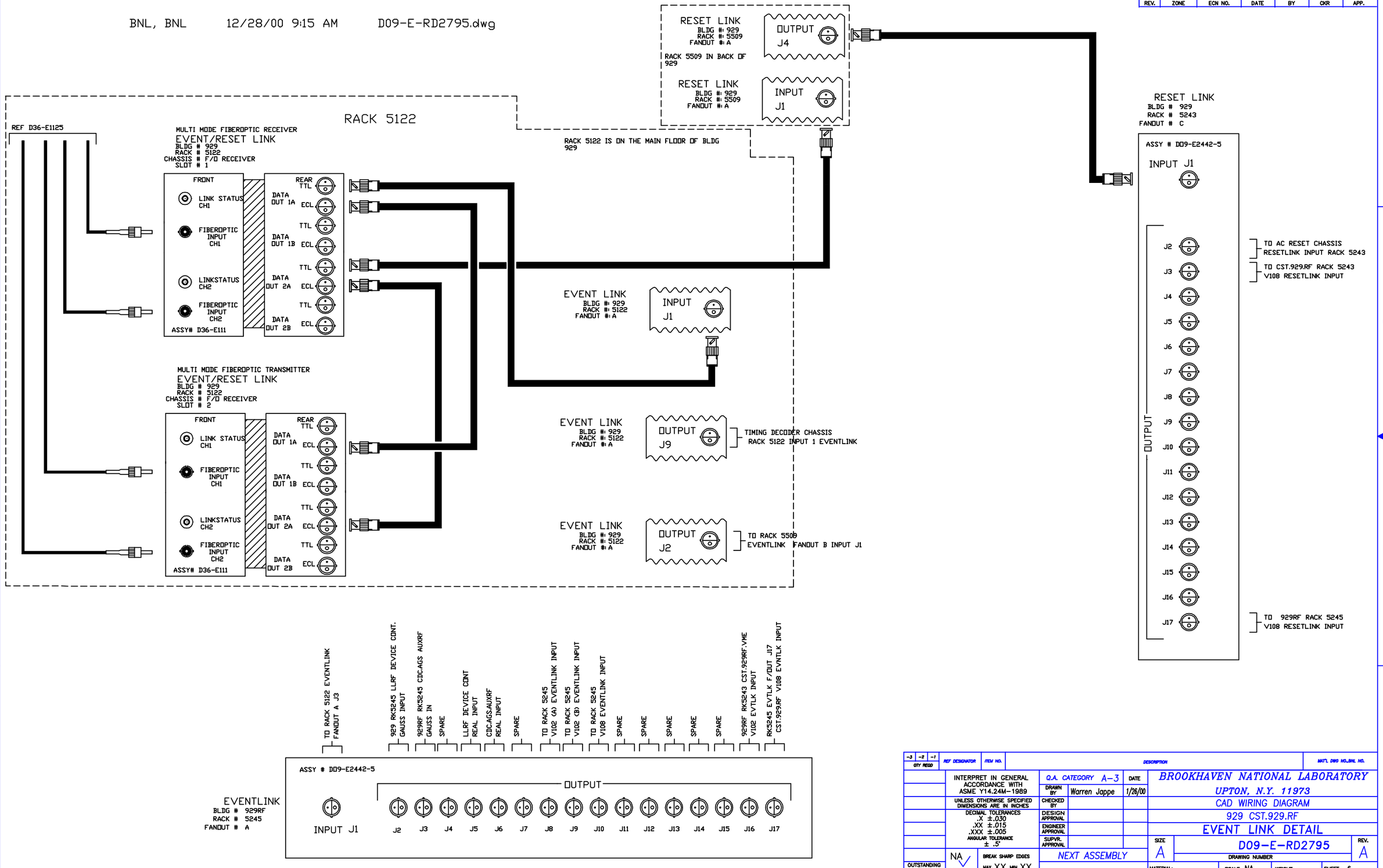


| REV. | ZONE | ECN NO. | DATE | BY | CKR | APP. |
|---|---|---|---|---|---|---|

| -3 | -2 | -1 | REF DESIGNATOR | ITEM NO. | DESCRIPTION | MAT'L DWG NO./BNL NO. |
|---|---|---|---|---|---|---|
| QTY REQD | | | | | | |

INTERPRET IN GENERAL ACCORDANCE WITH ASME Y14.24M-1989

UNLESS OTHERWISE SPECIFIED DIMENSIONS ARE IN INCHES

DECIMAL TOLERANCES
.X ±.030
.XX ±.015
.XXX ±.005
ANGULAR TOLERANCE ± .5°

OUTSTANDING ECN

NA FINISH

BREAK SHARP EDGES MAX. XX MIN. XX

| Q.A. CATEGORY A-3 | | DATE |
|---|---|---|
| DRAWN BY | Warren Jappe | 1/26/00 |
| CHECKED BY | | |
| DESIGN APPROVAL | | |
| ENGINEER APPROVAL | | |
| SUPVR. APPROVAL | | |

NEXT ASSEMBLY

**BROOKHAVEN NATIONAL LABORATORY**
UPTON, N.Y. 11973

CAD WIRING DIAGRAM

929 CST.929.RF

EVENT LINK DETAIL

SIZE A — DRAWING NUMBER D09-E-RD2795 — REV. A

MATERIAL: ——— SCALE: NA WEIGHT: – SHEET 6

1 *AUTOCAD

| REV. | ZONE | ECN NO. | DATE | BY | CKR | APP. |
|---|---|---|---|---|---|---|

BNL, BNL 12/28/00 9:18 AM D09-E-RD2796.dwg

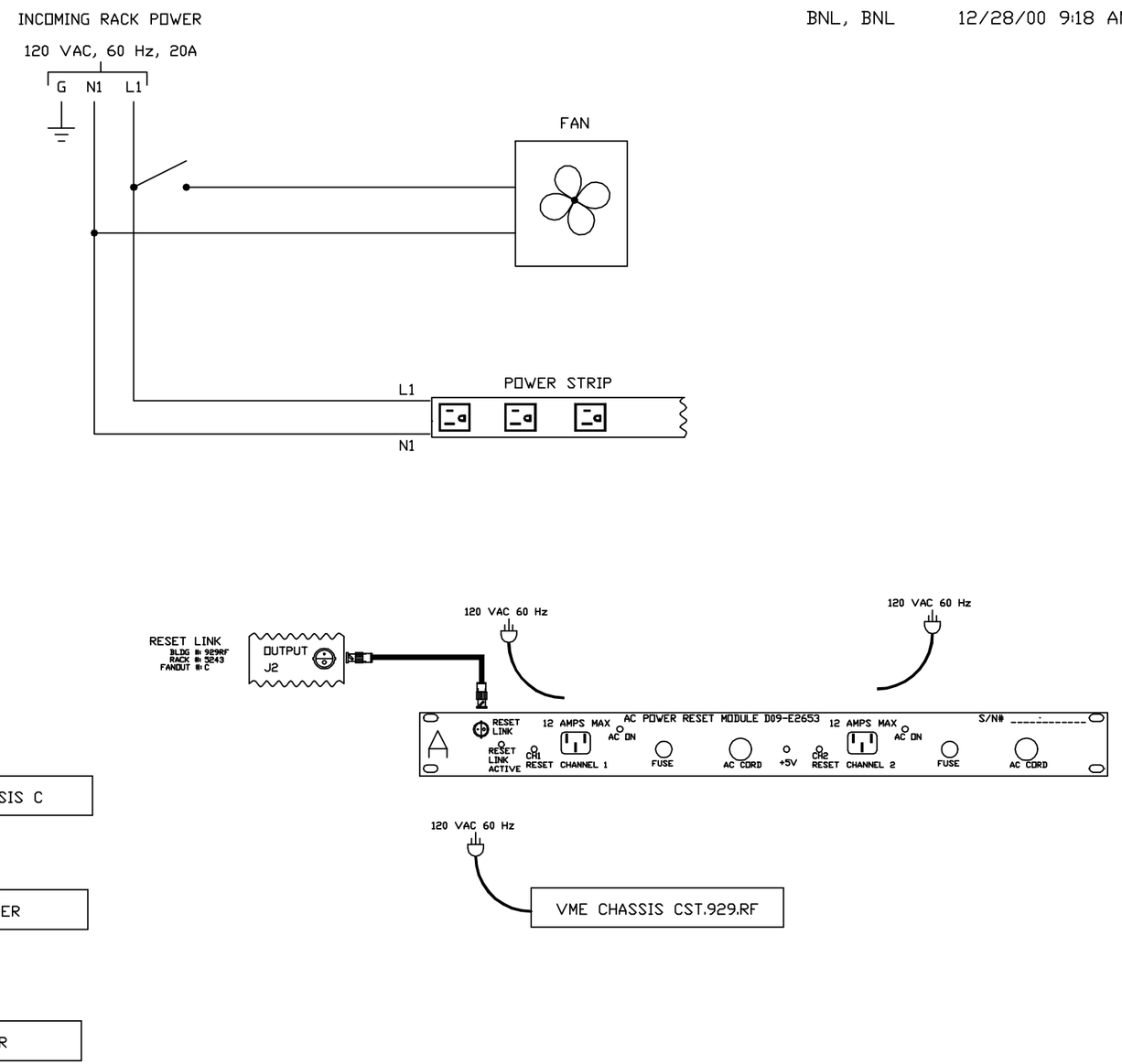


NOTE: ALL 120 VAC, 60 Hz POWER CORDS
PLUG INTO POWER STRIP OUTLETS EXCEPT FOR 6U VME CHASSIS

| -3 | -2 | -1 | REF DESIGNATOR | ITEM NO. | DESCRIPTION | MAT'L DWG NO.,SPEC NO. |
|---|---|---|---|---|---|---|
| QTY REQD | | | | | | |

| | | | |
|---|---|---|---|
| INTERPRET IN GENERAL ACCORDANCE WITH ASME Y14.24M-1989 | Q.A. CATEGORY A-3 | DATE | BROOKHAVEN NATIONAL LABORATORY ASSOCIATED UNIVERSITIES, INC. UPTON, N.Y. 11973 |
| UNLESS OTHERWISE SPECIFIED DIMENSIONS ARE IN INCHES | DRAWN BY Jappe | 3/22/00 | CAD WIRING DIAGRAM |
| DECIMAL TOLERANCES .X ±.030 .XX ±.015 .XXX ±.005 ANGULAR TOLERANCE ± .5° | CHECKED BY | | 929RF RACK 5243 |
| | DESIGN APPROVAL | | POWER DISTRIBUTION |
| | ENGINEER APPROVAL | | |
| | SUPVR. APPROVAL | | SIZE D09-E-RD2796 REV. |
| NA FINISH | BREAK SHARP EDGES MAX. XX MIN. XX | NEXT ASSEMBLY | DRAWING NUMBER |
| OUTSTANDING ECN | | | MATERIAL: ——— SCALE: NA WEIGHT: SHEET 7 |

*AUTOCAD