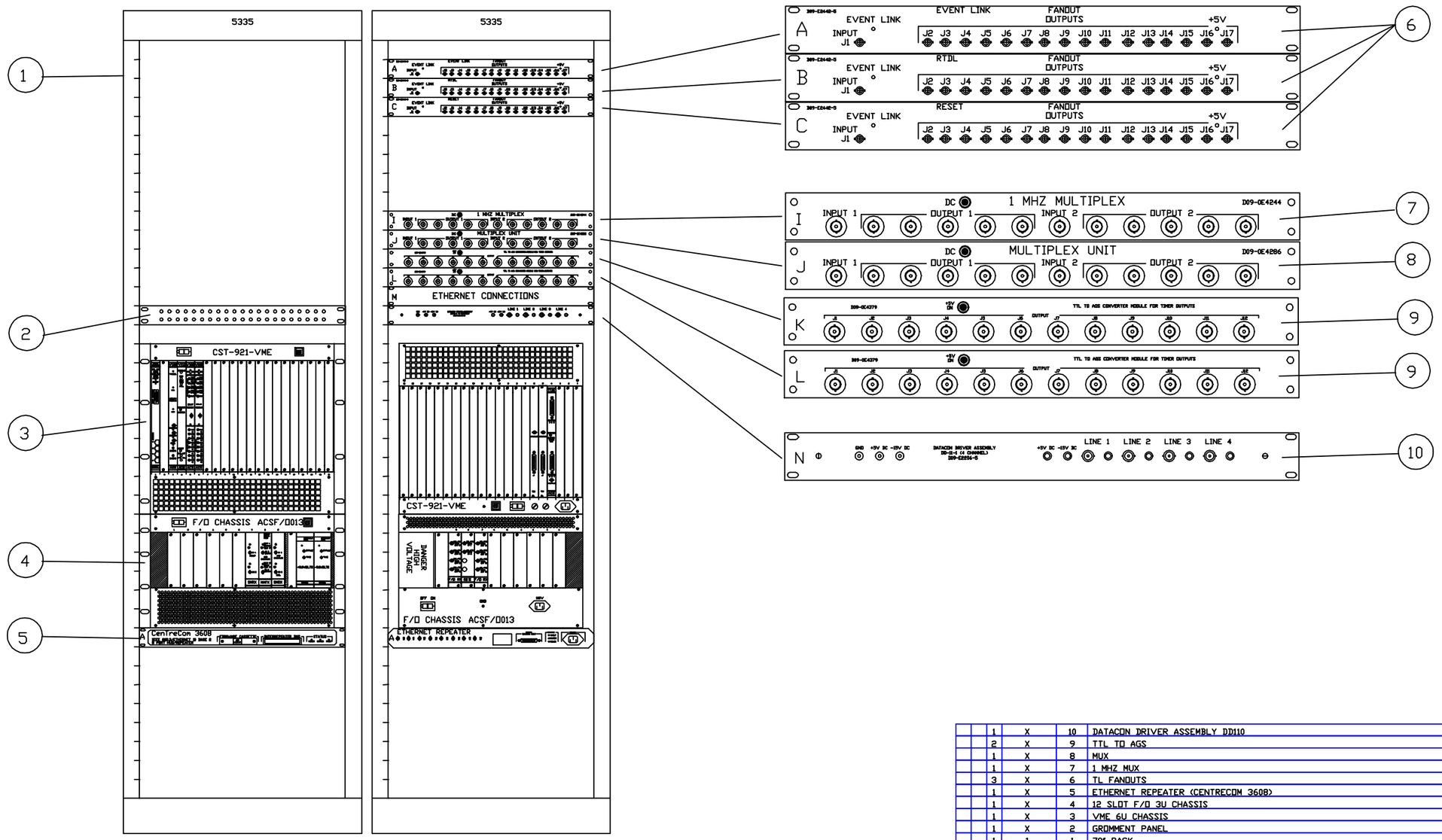

		1	X	10	DATACON DRIVER ASSEMBLY DD110	D09-E2256-5
		2	X	9	TTL TO AGS	X
		1	X	8	MUX	D09-OE4286
		1	X	7	1 MHZ MUX	D09-OE4244
		3	X	6	TL FANOUTS	X
		1	X	5	ETHERNET REPEATER (CENTRECOM 3608)	X
		1	X	4	12 SLOT F/O 3U CHASSIS	X
		1	X	3	VME 6U CHASSIS	X
		1	X	2	GROMMENT PANEL	X
		1	1	1	70" RACK	X
-3	-2	-1	REF DESIGNATOR	ITEM NO.	DESCRIPTION	MAT'L DWG NO./INL NO.
QTY REQD						

INTERPRET IN GENERAL ACCORDANCE WITH ASME Y14.24M-1989

UNLESS OTHERWISE SPECIFIED DIMENSIONS ARE IN INCHES

DECIMAL TOLERANCES
.X ±.030
.XX ±.015
.XXX ±.005
ANGULAR TOLERANCE
± .5°

FINISH NA

BREAK SHARP EDGES MAX. XX MIN. XX

OUTSTANDING ECN

Q.A. CATEGORY A-3

DRAWN BY	Venegas	12/24/97
CHECKED BY		
DESIGN APPROVAL		
ENGINEER APPROVAL		
SUPVR. APPROVAL		

NEXT ASSEMBLY

BROOKHAVEN NATIONAL LABORATORY
ASSOCIATED UNIVERSITIES, INC.
UPTON, N.Y. 11973

RACK LAYOUT FOR 921
CONTROL SYSTEM

SIZE D
DRAWING NUMBER D09-E-RD2907
REV. A

MATERIAL: ——— SCALE: FULL WEIGHT: – SHEET 1

FILE "921STN.DWG"

*AUTOCAD

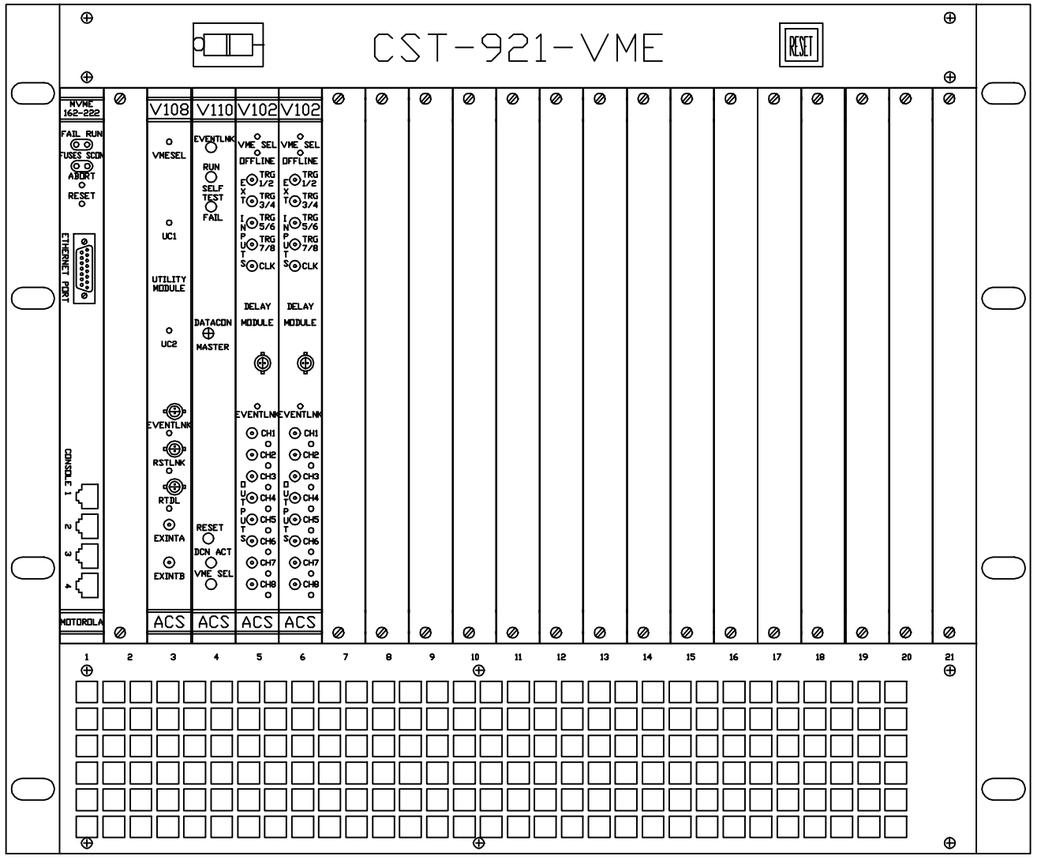

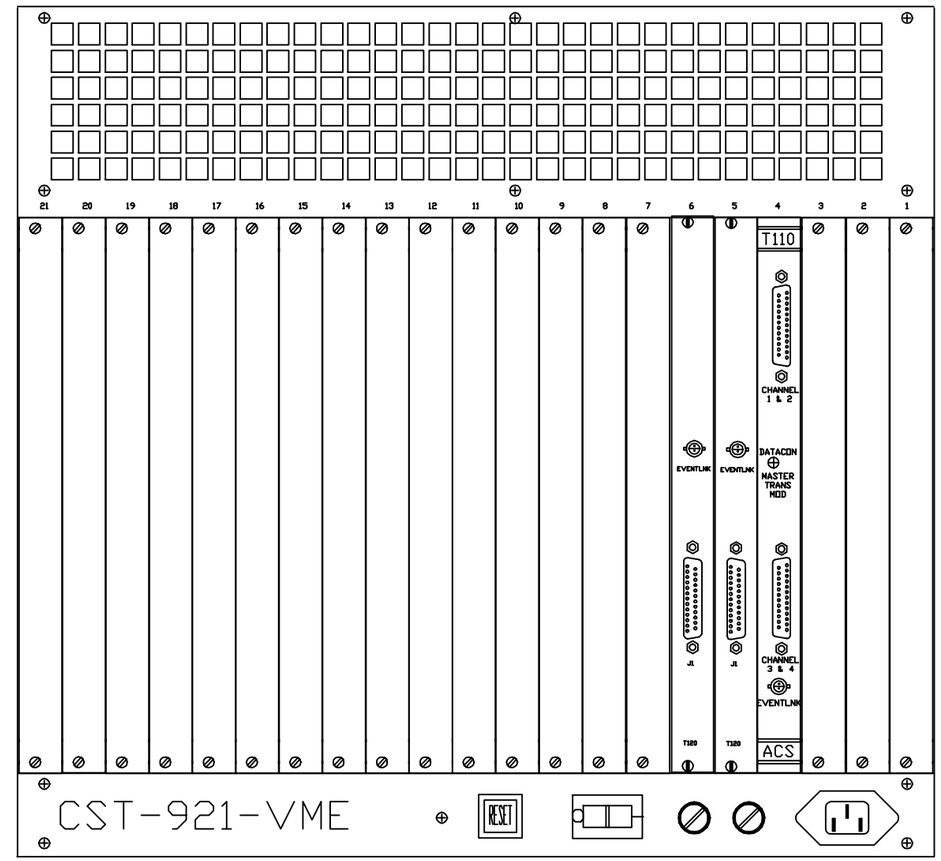

NOTE 1: FOR UNUSED SLOTS

-3	-2	-1	QTY REQD	REF DESIGNATOR	ITEM NO.	DESCRIPTION	MAT'L DWG NO.,BNL NO.
			X	X	X	X	X
			34	NOTE 1	8	6U FILLER PANELS	X
			2	SLOTS 5,6 R	7	T120 TRANSITION MODULE	X
			1	SLOT 4 R	6	T110	X
			1	SLOT 4	5	V110	X
			2	SLOT 5,6	4	V102 DECODER MODULE	94028070
			1	SLOT 3	3	V108 UTILITY MODLULE	94028094
			1	SLOT 1	2	FRONT END COMPUTER (162-222)	X
			1	N/A	1	6U VME CHASSIS	RHIC-93008000

INTERPRET IN GENERAL ACCORDANCE WITH ASME Y14.24M-1989

UNLESS OTHERWISE SPECIFIED DIMENSIONS ARE IN INCHES

DECIMAL TOLERANCES
.X ±.030
.XX ±.015
.XXX ±.005
ANGULAR TOLERANCE
± .5°

OUTSTANDING ECN

NA FINISH

BREAK SHARP EDGES
MAX. XX MIN. XX

Q.A. CATEGORY A-3

		DATE
DRAWN BY	VENEGAS	12/17/97
CHECKED BY		
DESIGN APPROVAL		
ENGINEER APPROVAL		
SUPVR. APPROVAL		

NEXT ASSEMBLY

BROOKHAVEN NATIONAL LABORATORY
ASSOCIATED UNIVERSITIES, INC.
UPTON, N.Y. 11973

VME CONTROL CHASSIS

921

SIZE D

D09-E-RD2902

DRAWING NUMBER

REV.

MATERIAL: ——— SCALE: WEIGHT: SHEET 2

FILE "921CST.DWG"

*AUTOCAD

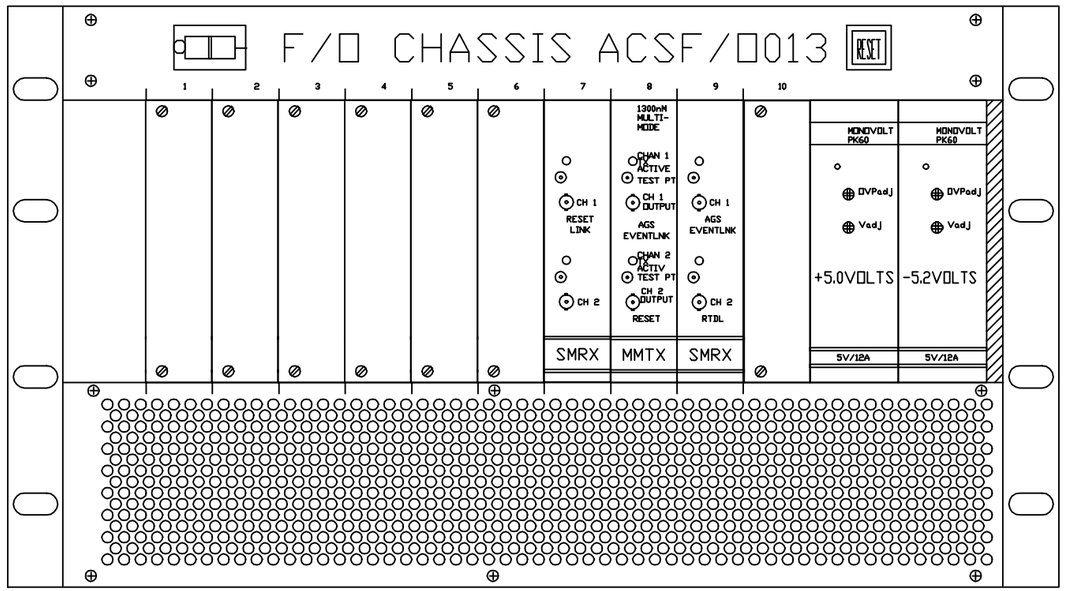

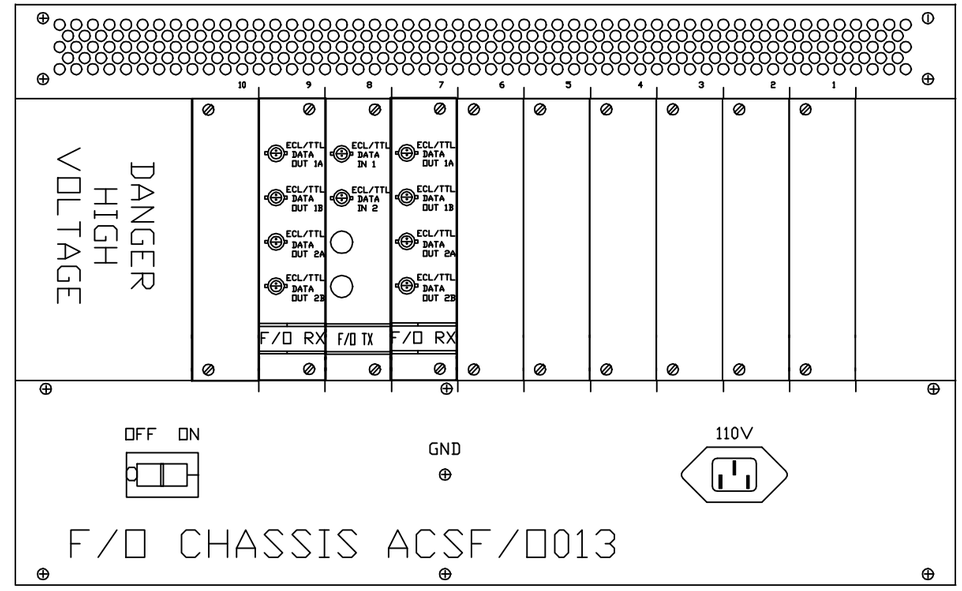

NOTE 1: FILLER PANELS FOR UNUSED SLOTS

QTY REQD -3	QTY REQD -2	QTY REQD -1	REF DESIGNATOR	ITEM NO.	DESCRIPTION	MAT'L DWG NO.,BNL NO.
		1	SLOT 8 R	8	3U F/O TX TRANSITION MODULE (TTL)	X
		1	SLOT 8	7	MMTX	X
		14	NOTE 1	6	3UX 6HP BLANK PANEL	ESFE-3032
		1	SLOT 12	5	MONOVOLT P.S. -5.2V	X
		1	SLOT 11	4	MONOVOLT P.S. +5V	X
		2	SLOT 7,9 R	3	3U F/O RX TRANSITION MODULE (TTL)	D09-E2542
		2	SLOT 7,9	2	F/O SMRX	94028101
		1	X	1	12 SLOT 3U F/O CHASSIS	94028261

INTERPRET IN GENERAL ACCORDANCE WITH ASME Y14.24M-1989

UNLESS OTHERWISE SPECIFIED DIMENSIONS ARE IN INCHES

DECIMAL TOLERANCES
.030 .X ±
.015 .XX ±
.005 .XXX ±
ANGULAR TOLERANCE
.5° ±

OUTSTANDING ECN

NA FINISH

BREAK SHARP EDGES MAX. XX MIN. XX

Q.A. CATEGORY A-3

DRAWN BY Venegas 12/19/97

CHECKED BY

DESIGN APPROVAL

ENGINEER APPROVAL

SUPVR. APPROVAL

DATE

NEXT ASSEMBLY

BROOKHAVEN NATIONAL LABORATORY
ASSOCIATED UNIVERSITIES, INC.
UPTON, N.Y. 11973

921 F/O CHASSIS

SIZE D09-E-RD2904 REV. A

DRAWING NUMBER

MATERIAL: FULL SCALE: – WEIGHT: SHEET 3

FILE "921F_O.DWG"

1 *AUTOCAD

REV.	ZONE	ECN NO.	DATE	BY	CKR	APP.

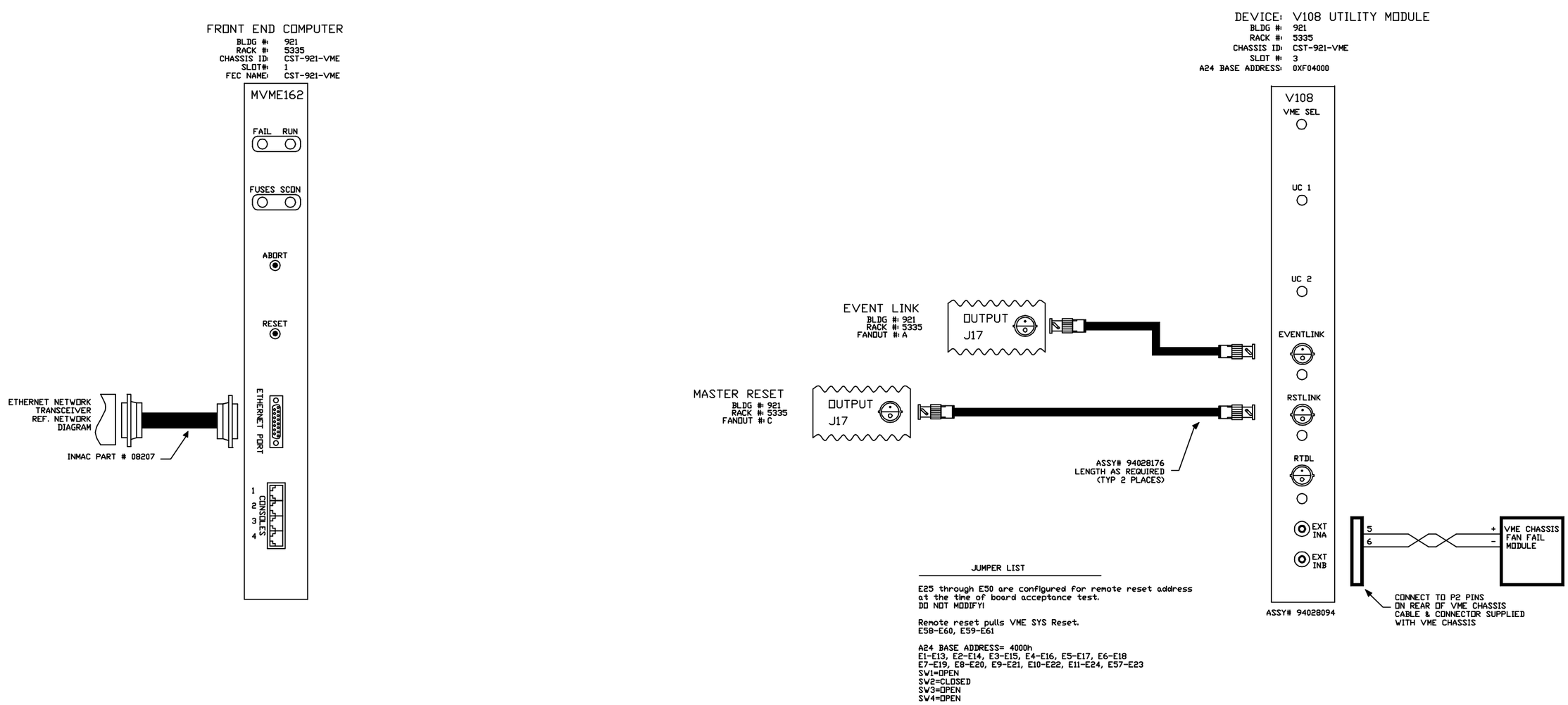

JUMPER LIST

E25 through E50 are configured for remote reset address at the time of board acceptance test.
DO NOT MODIFY!

Remote reset pulls VME SYS Reset.
E58-E60, E59-E61

A24 BASE ADDRESS= 4000h
E1-E13, E2-E14, E3-E15, E4-E16, E5-E17, E6-E18
E7-E19, E8-E20, E9-E21, E10-E22, E11-E24, E57-E23
SW1=OPEN
SW2=CLOSED
SW3=OPEN
SW4=OPEN

921_V108.DWG

-3	-2	-1	REF DESIGNATOR	ITEM NO.	DESCRIPTION	MAT'L DWG NO.,DWG NO.
QTY REQD						

INTERPRET IN GENERAL ACCORDANCE WITH ASME Y14.24M-1989

UNLESS OTHERWISE SPECIFIED DIMENSIONS ARE IN INCHES

DECIMAL TOLERANCES
.X ±.030
.XX ±.015
.XXX ±.005
ANGULAR TOLERANCE
± .5°

OUTSTANDING ECN

NA FINISH

BREAK SHARP EDGES
MAX. XX MIN. XX

Q.A. CATEGORY A-3		DATE
DRAWN BY	VENEGAS	12/22/97
CHECKED BY		
DESIGN APPROVAL		
ENGINEER APPROVAL		
SUPVR. APPROVAL		

NEXT ASSEMBLY

BROOKHAVEN NATIONAL LABORATORY
ASSOCIATED UNIVERSITIES, INC.
UPTON, N.Y. 11973

AGS CONTROLS WIRING DIAGRAM
VME CHASSIS CST-921-VME
FT END COMP/V108 UTIL MODULE

SIZE D
D09-E-RD2901
DRAWING NUMBER
REV. A

MATERIAL: ——— SCALE: NA WEIGHT: — SHEET 4

*AUTOCAD

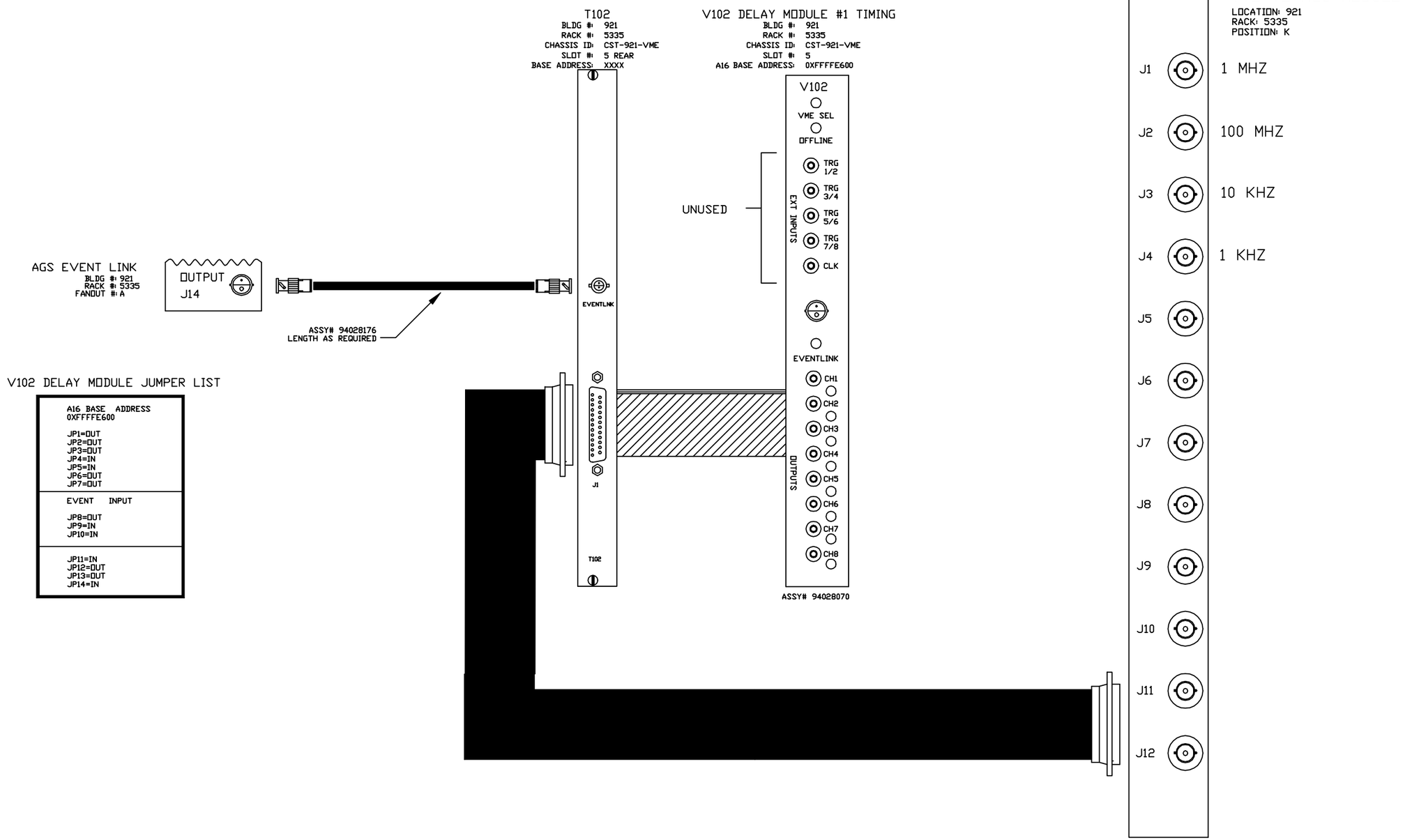

V102 DELAY MODULE JUMPER LIST

A16 BASE ADDRESS 0XFFFFE600 JP1=OUT JP2=OUT JP3=OUT JP4=IN JP5=IN JP6=OUT JP7=OUT
EVENT INPUT JP8=OUT JP9=IN JP10=IN
JP11=IN JP12=OUT JP13=OUT JP14=IN

FILE "921_102.DWG"

REV.	ZONE	ECN NO.	DATE	BY	CKR	APP.

-3	-2	-1	REF DESIGNATOR	ITEM NO.	DESCRIPTION	MAT'L DWG NO./BNL NO.
QTY REQD						

INTERPRET IN GENERAL ACCORDANCE WITH ASME Y14.24M-1989

UNLESS OTHERWISE SPECIFIED DIMENSIONS ARE IN INCHES

DECIMAL TOLERANCES
.X ±.030
.XX ±.015
.XXX ±.005
ANGULAR TOLERANCE
± .5°

OUTSTANDING ECN

NA FINISH

BREAK SHARP EDGES
MAX. XX MIN. XX

Q.A. CATEGORY A-3		DATE
DRAWN BY	VENEGAS	12/24/97
CHECKED BY		
DESIGN APPROVAL		
ENGINEER APPROVAL		
SUPVR. APPROVAL		

NEXT ASSEMBLY

BROOKHAVEN NATIONAL LABORATORY
ASSOCIATED UNIVERSITIES, INC.
UPTON, N.Y. 11973

AGS CONTROLS WIRING DIAGRAM
CST-921-VME
V102 DELAY MODULE #1 TIMING

SIZE D
D09-E-RD2899
DRAWING NUMBER
REV. A

MATERIAL: ——— SCALE: NA WEIGHT: – SHEET 5

*AUTOCAD

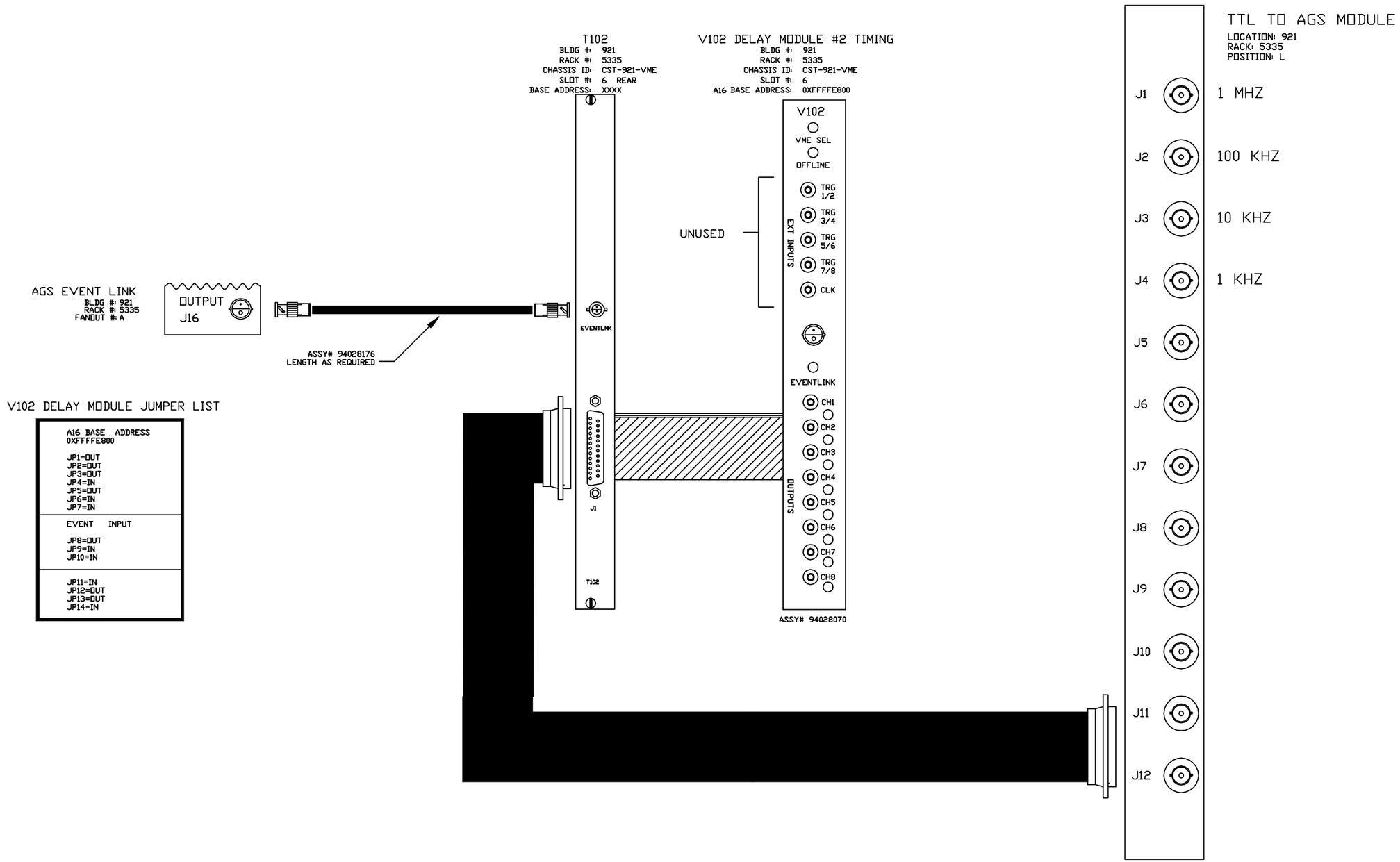

V102 DELAY MODULE JUMPER LIST

A16 BASE ADDRESS 0XFFFFE800 JP1=OUT JP2=OUT JP3=OUT JP4=IN JP5=OUT JP6=IN JP7=IN
EVENT INPUT JP8=OUT JP9=IN JP10=IN
JP11=IN JP12=OUT JP13=OUT JP14=IN

FILE "921_102_2.DWG"

REV.	ZONE	ECN NO.	DATE	BY	CKR	APP.

-3	-2	-1	REF DESIGNATOR	ITEM NO.	DESCRIPTION	MAT'L DWG NO./BNL NO.
QTY REQD						

INTERPRET IN GENERAL ACCORDANCE WITH ASME Y14.24M-1989

UNLESS OTHERWISE SPECIFIED DIMENSIONS ARE IN INCHES

DECIMAL TOLERANCES
.X ±.030
.XX ±.015
.XXX ±.005
ANGULAR TOLERANCE
± .5°

OUTSTANDING ECN

NA FINISH

BREAK SHARP EDGES
MAX. XX MIN. XX

Q.A. CATEGORY A-3		DATE
DRAWN BY	VENEGAS	12/22/97
CHECKED BY		
DESIGN APPROVAL		
ENGINEER APPROVAL		
SUPVR. APPROVAL		

NEXT ASSEMBLY

BROOKHAVEN NATIONAL LABORATORY
ASSOCIATED UNIVERSITIES, INC.
UPTON, N.Y. 11973

AGS CONTROLS WIRING DIAGRAM
CST-921-VME
V102 DELAY MODULE #2 TIMING

SIZE D
D09-E-RD2900
DRAWING NUMBER
REV. A

MATERIAL: ——— SCALE: NA WEIGHT: — SHEET 6

*AUTOCAD

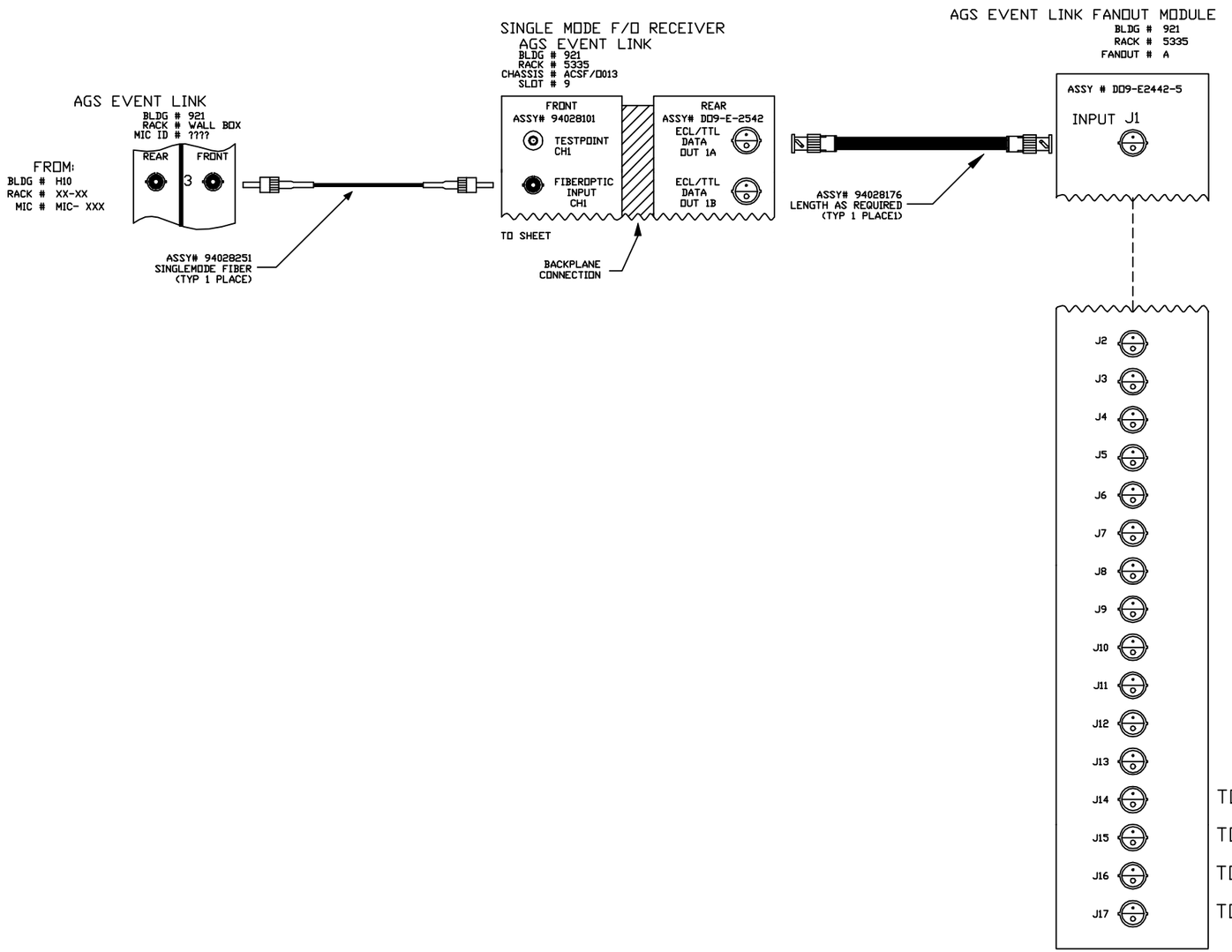

FILE "921EVENT.DGW"

-3	-2	-1	REF DESIGNATOR	ITEM NO.	DESCRIPTION	MAT'L. DWG NO.,BRL NO.
QTY REQD						

INTERPRET IN GENERAL ACCORDANCE WITH ASME Y14.24M-1989

UNLESS OTHERWISE SPECIFIED DIMENSIONS ARE IN INCHES

DECIMAL TOLERANCES
.X ±.030
.XX ±.015
.XXX ±.005
ANGULAR TOLERANCE
± .5°

NA FINISH

BREAK SHARP EDGES
MAX. XX MIN. XX

OUTSTANDING ECN

Q.A. CATEGORY A-3		DATE
DRAWN BY	VENEGAS	12/29/97
CHECKED BY		
DESIGN APPROVAL		
ENGINEER APPROVAL		
SUPVR. APPROVAL		

NEXT ASSEMBLY

BROOKHAVEN NATIONAL LABORATORY
ASSOCIATED UNIVERSITIES, INC.
UPTON, N.Y. 11973

AGS CONTROLS WIRING DIAGRAM

921

AGS EVENT LINK

SIZE D

D09-E-RD2903

DRAWING NUMBER

REV. A

MATERIAL: ——— SCALE: NA WEIGHT: – SHEET 7

*AUTOCAD

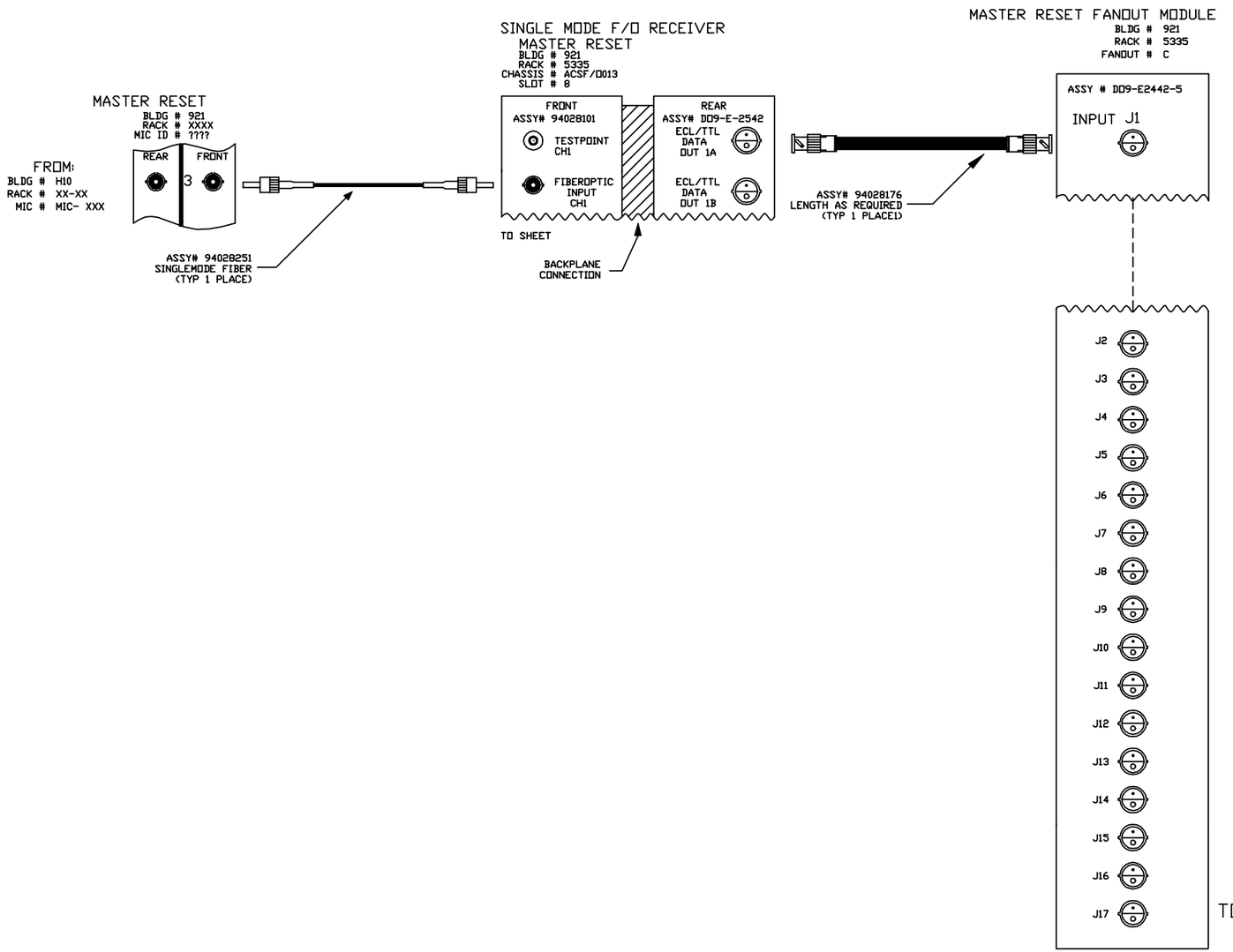

FILE "921RESET.DGW"

REV.	ZONE	ECN NO.	DATE	BY	CKR	APP.

-3	-2	-1	REF DESIGNATOR	ITEM NO.	DESCRIPTION	MAT'L DWG NO.,BRL NO.
QTY REQD						

INTERPRET IN GENERAL ACCORDANCE WITH ASME Y14.24M-1989

UNLESS OTHERWISE SPECIFIED DIMENSIONS ARE IN INCHES

DECIMAL TOLERANCES
.X ±.030
.XX ±.015
.XXX ±.005
ANGULAR TOLERANCE
± .5°

NA FINISH

BREAK SHARP EDGES
MAX. XX MIN. XX

OUTSTANDING ECN

Q.A. CATEGORY A-3

		DATE
DRAWN BY	VENEGAS	12/29/97
CHECKED BY		
DESIGN APPROVAL		
ENGINEER APPROVAL		
SUPVR. APPROVAL		

NEXT ASSEMBLY

BROOKHAVEN NATIONAL LABORATORY
ASSOCIATED UNIVERSITIES, INC.
UPTON, N.Y. 11973

AGS CONTROLS WIRING DIAGRAM

921

MASTER RESET

SIZE D | DRAWING NUMBER D09-E-RD2905 | REV. A

MATERIAL: ——— | SCALE: NA | WEIGHT: – | SHEET 8

*AUTOCAD

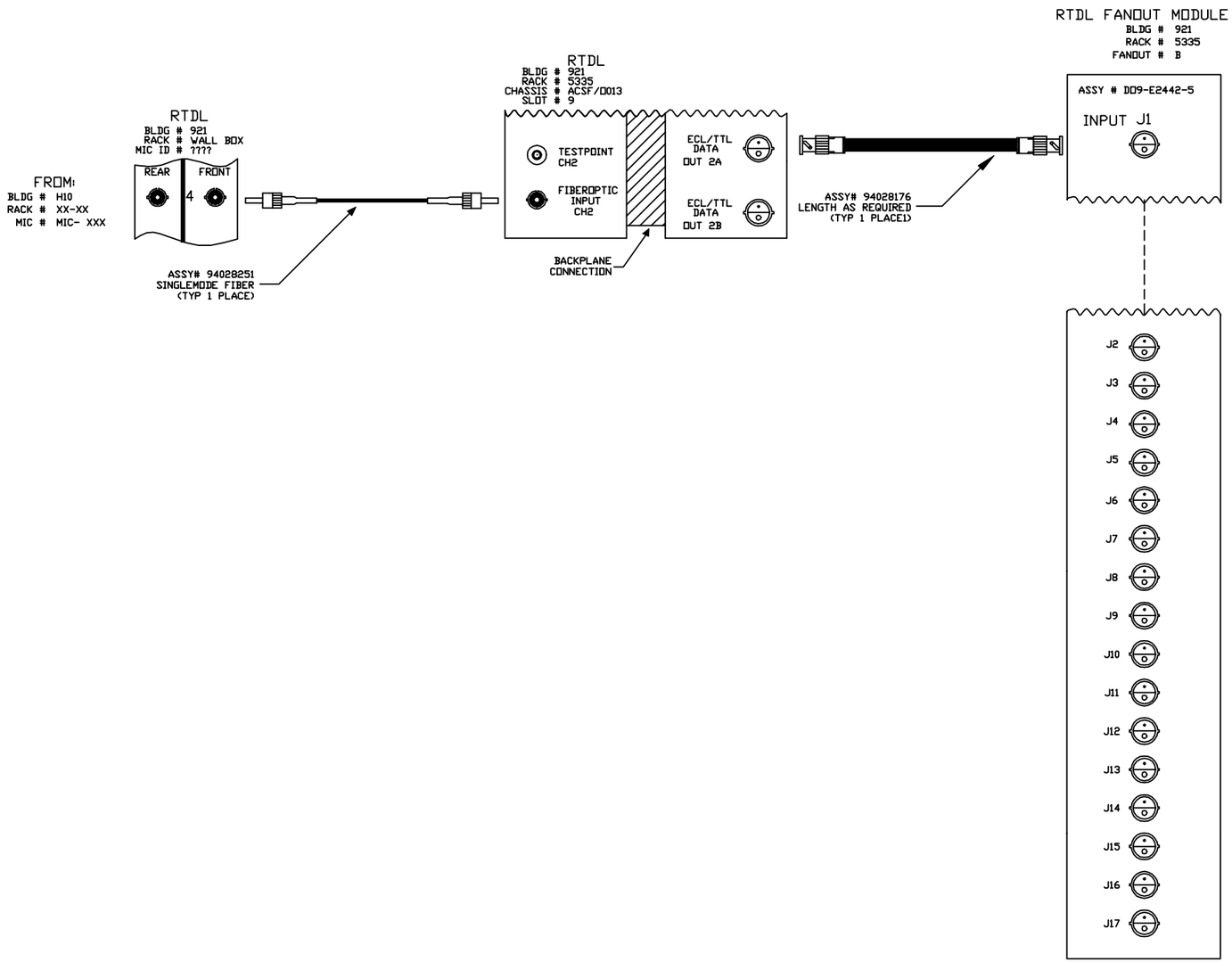

FILE "921RTDL.DGW"

REV.	ZONE	ECN NO.	DATE	BY	CKR	APP.

-3	-2	-1	REF DESIGNATOR	ITEM NO.	DESCRIPTION	MAT'L DWG NO.,BRL NO.
QTY REQD						

INTERPRET IN GENERAL ACCORDANCE WITH ASME Y14.24M-1989

UNLESS OTHERWISE SPECIFIED DIMENSIONS ARE IN INCHES

DECIMAL TOLERANCES
.X ±.030
.XX ±.015
.XXX ±.005
ANGULAR TOLERANCE
± .5°

NA FINISH

BREAK SHARP EDGES
MAX. XX MIN. XX

OUTSTANDING ECN

Q.A. CATEGORY A-3

		DATE
DRAWN BY	VENEGAS	12/29/97
CHECKED BY		
DESIGN APPROVAL		
ENGINEER APPROVAL		
SUPVR. APPROVAL		

NEXT ASSEMBLY

BROOKHAVEN NATIONAL LABORATORY
ASSOCIATED UNIVERSITIES, INC.
UPTON, N.Y. 11973

AGS CONTROLS WIRING DIAGRAM

921

RTDL

SIZE D

D09-E-RD2906

DRAWING NUMBER

REV. A

MATERIAL: ——— SCALE: NA WEIGHT: – SHEET 9

*AUTOCAD