C-A Controls Section
OPPIS Wiring Diagrams

Brookhaven National Laboratory, Upton, New York 11973

Created By: Phil Pape
Last Updated 04/06/2001

Power Distribution
🕮 Rack R-9 (Sheet 1)

Building Layout
🕮 Oppis Laser Area (Sheet 2)

Controls rack
🕮 Rack R-9 77” Assembly (Sheet 3)

VME Chassis CST-930-OPPIS (Sheet 4)
🕮 Front End Computer / V108 (Sheet 5)
🕮 Event Link Fanout Linac Timeline (Sheet 6)
🕮 Reset Link (Sheet 7)
🕮 V102 A & B, V194 (Sheet 8)
🕮 V113 / 114 (Sheet 9)
🕮 MADC Panel A Interface (Sheet 10)
🕮 MADC Panel B Interface (Sheet 11)
🕮 MADC Panel C Interface (Sheet 12)
🕮 VMIVME 4122 # 1 Analog Output (Sheet 13)
🕮 VMIVME 4122 # 2 Analog Output (Sheet 14)
🕮 VMIVME 4122 # 3 Analog Output (Sheet 15)
🕮 VMIVME 4122 # 4 Analog Output (Sheet 16)
🕮 VMIVME 4122 # 5 Analog Output (Sheet 17)
🕮 OMS 4 Axis Motor Controllers (Sheet 18)

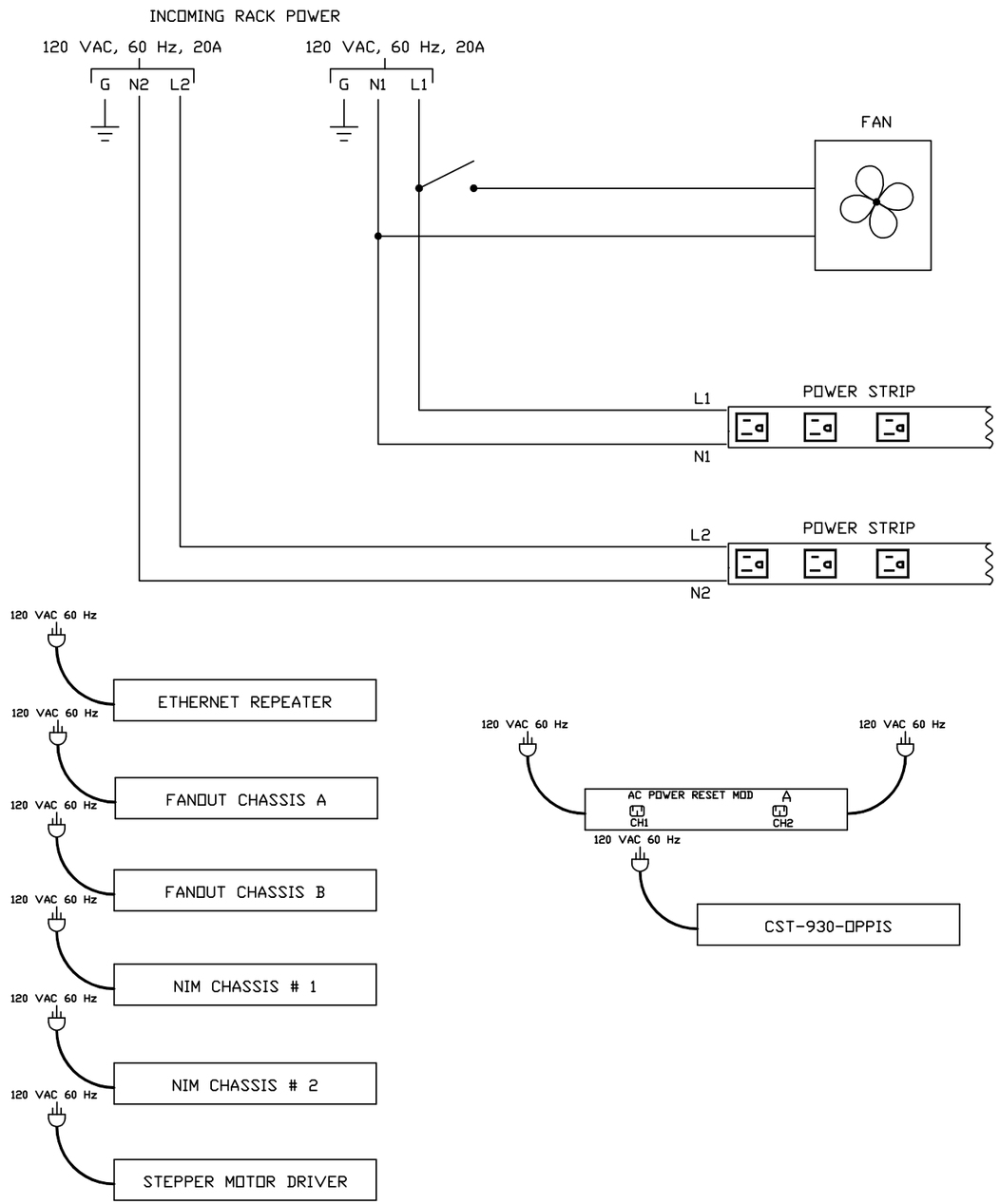

RACK R-9

NOTE: ALL 120 VAC, 60 Hz POWER CORDS
PLUG INTO POWER STRIP OUTLETS

REV.	ZONE	ECN NO.	DATE	BY	CKR	APP.

C-A, BNL 3/16/01 11:22 AM AC_1.dwg

QTY REQD -3	QTY REQD -2	QTY REQD -1	REF DESIGNATOR	ITEM NO.	DESCRIPTION	MAT'L DWG NO.,BNL NO.
		2		8	SERIAL LINK TWINAX CABLE, LENGTH AS REQUIRED	94028176
		4		4	MADC A/D I/O CABLE	94028216
		1		2	MADC V113 TO V114 P2 INTERFACE RIBBON CABLE	94028218
		X		1	NETWORK CABLE TO FRONT END COMPUTER	

INTERPRET IN GENERAL ACCORDANCE WITH ASME Y14.24M-1989

UNLESS OTHERWISE SPECIFIED DIMENSIONS ARE IN INCHES

DECIMAL TOLERANCES
.X ±.030
.XX ±.015
.XXX ±.005
ANGULAR TOLERANCE
± .5°

FINISH NA

BREAK SHARP EDGES MAX. XX MIN. XX

OUTSTANDING ECN

Q.A. CATEGORY A-3

DATE 03/16/01

DRAWN BY PAPE

CHECKED BY

DESIGN APPROVAL

ENGINEER APPROVAL

SUPVR. APPROVAL

NEXT ASSEMBLY

BROOKHAVEN NATIONAL LABORATORY
UPTON, N.Y. 11973

OPPIS CONTROLS WIRING DIAGRAM

LINAC RACK R-9

POWER DISTRIBUTION

SIZE A

DRAWING NUMBER

REV. A

MATERIAL: ——— SCALE: NA WEIGHT: – SHEET 1 OF 18

*AUTOCAD

C-A, BNL 3/16/01 11:23 AM BLDG LAYOUT.dwg

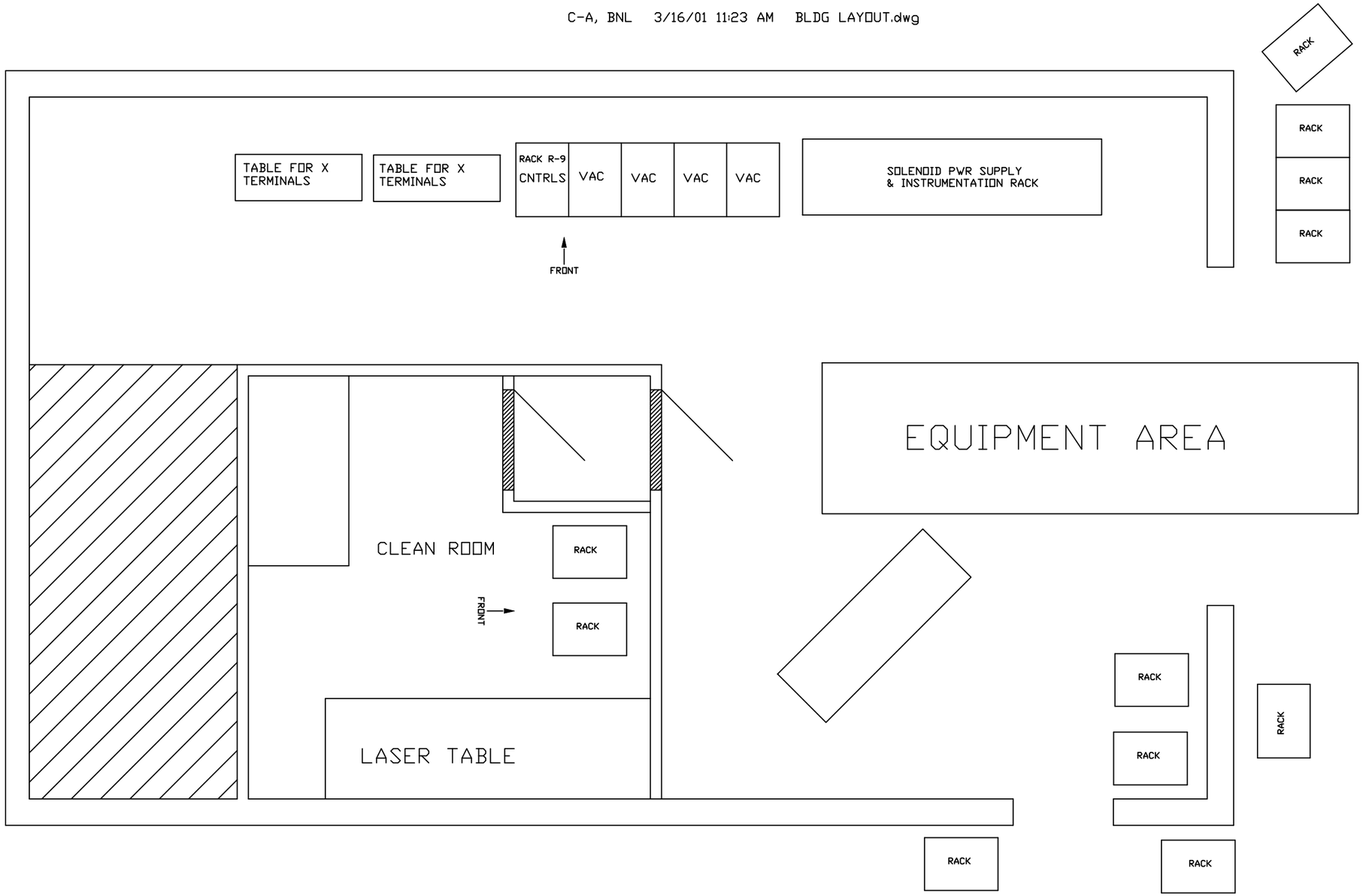

REV.	ZONE	ECN NO.	DATE	BY	CKR	APP.

-3	-2	-1	REF DESIGNATOR	ITEM NO.	DESCRIPTION	MAT'L. DWG NO.,BNL NO.
QTY REQD						

INTERPRET IN GENERAL ACCORDANCE WITH ASME Y14.24M-1989

UNLESS OTHERWISE SPECIFIED DIMENSIONS ARE IN INCHES

DECIMAL TOLERANCES
.X ±.030
.XX ±.015
.XXX ±.005
ANGULAR TOLERANCE
± .5°

NA FINISH

BREAK SHARP EDGES
MAX. XX MIN. XX

OUTSTANDING ECN

Q.A. CATEGORY A-3

DATE 03/16/01

DRAWN BY PAPE

CHECKED BY

DESIGN APPROVAL

ENGINEER APPROVAL

SUPVR. APPROVAL

NEXT ASSEMBLY

BROOKHAVEN NATIONAL LABORATORY
ASSOCIATED UNIVERSITIES, INC.
UPTON, N.Y. 11973

OPPIS CONTROLS

LINAC

BUILDING LAYOUT

SIZE A

DRAWING NUMBER

REV. A

MATERIAL: ——— SCALE: NA WEIGHT: – SHEET 2 OF 18

*AUTOCAD

C-A, BNL 3/16/01 11:32 AM RACK LAYOUT.dwg

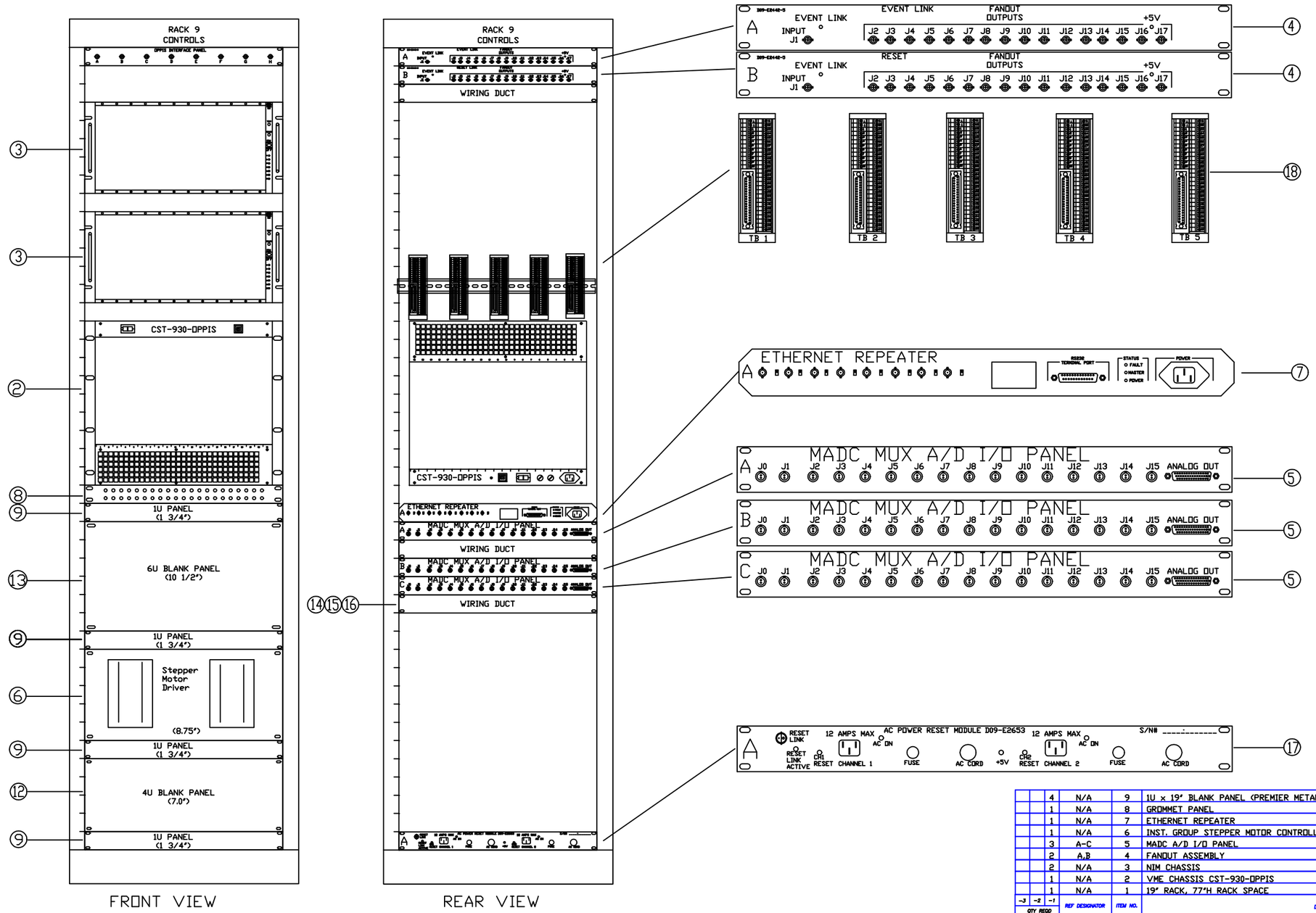

		4	N/A	9	1U x 19" BLANK PANEL (PREMIER METAL ARP-119-553)		
		1	N/A	8	GROMMET PANEL		
		1	N/A	7	ETHERNET REPEATER		
		1	N/A	6	INST. GROUP STEPPER MOTOR CONTROLLER		
		3	A-C	5	MADC A/D I/O PANEL	94028183	
		2	A,B	4	FANOUT ASSEMBLY	D09-E2442	
		2	N/A	3	NIM CHASSIS		
		1	N/A	2	VME CHASSIS CST-930-OPPIS	RHIC-93008000	
		1	N/A	1	19" RACK, 77"H RACK SPACE		
-3	-2	-1	REF DESIGNATOR	ITEM NO.	DESCRIPTION	MAT'L DWG NO./BNL NO.	
QTY REQD							

		1	N/A	20	19" PIECE OF D RAIL for mounting Item 18	
		AR	PANELS	19	10-32 x 1/2" BINDING HEAD MACHINE SCREWS	T-32276
		5	A-E	18	PHOENIX ADAPTOR 37DSUB	
		1	N/A	17	AC POWER RESET MODULE	D09-E2653
		6	N/A	16	WIRING DUCT SNAP CLIPS 1.5"W (PANDUIT SNS1.5-C)	
		3	N/A	15	WIRING DUCT COVER 1.5"W (PANDUIT C1.5LG6)	
		3	N/A	14	WIRING DUCT 1.5"W x 4"D (PANDUIT E1.5X4LG6)	
		1	N/A	13	6U x 19" BLANK PANEL (PREMIER METAL ARP-1019-553)	
		1	N/A	12	4U x 19" BLANK PANEL (PREMIER METAL ARP-719-553)	
		X	X	11	X	X
		X	X	10	X	X

	INTERPRET IN GENERAL ACCORDANCE WITH ASME Y14.24M-1989	Q.A. CATEGORY A-3	DATE
	UNLESS OTHERWISE SPECIFIED DIMENSIONS ARE IN INCHES	DRAWN BY PAPE	03/16/01
	DECIMAL TOLERANCES .X ±.030 .XX ±.015 .XXX ±.005 ANGULAR TOLERANCE ± .5°	CHECKED BY	
		DESIGN APPROVAL	
		ENGINEER APPROVAL	
		SUPVR. APPROVAL	
OUTSTANDING ECN	NA FINISH	BREAK SHARP EDGES MAX. XX MIN. XX	NEXT ASSEMBLY

BROOKHAVEN NATIONAL LABORATORY
UPTON, N.Y. 11973
OPPIS CONTROLS
LINAC
RACK 9 ASSEMBLY

SIZE A | DRAWING NUMBER | REV. A

MATERIAL: ——— SCALE: NA WEIGHT: – SHEET 3 OF 18

1 *AUTOCAD

REV.	ZONE	ECN NO.	DATE	BY	CKR	APP.

C-A, BNL 3/16/01 11:31 AM OPPIS_Chassis_2.dwg

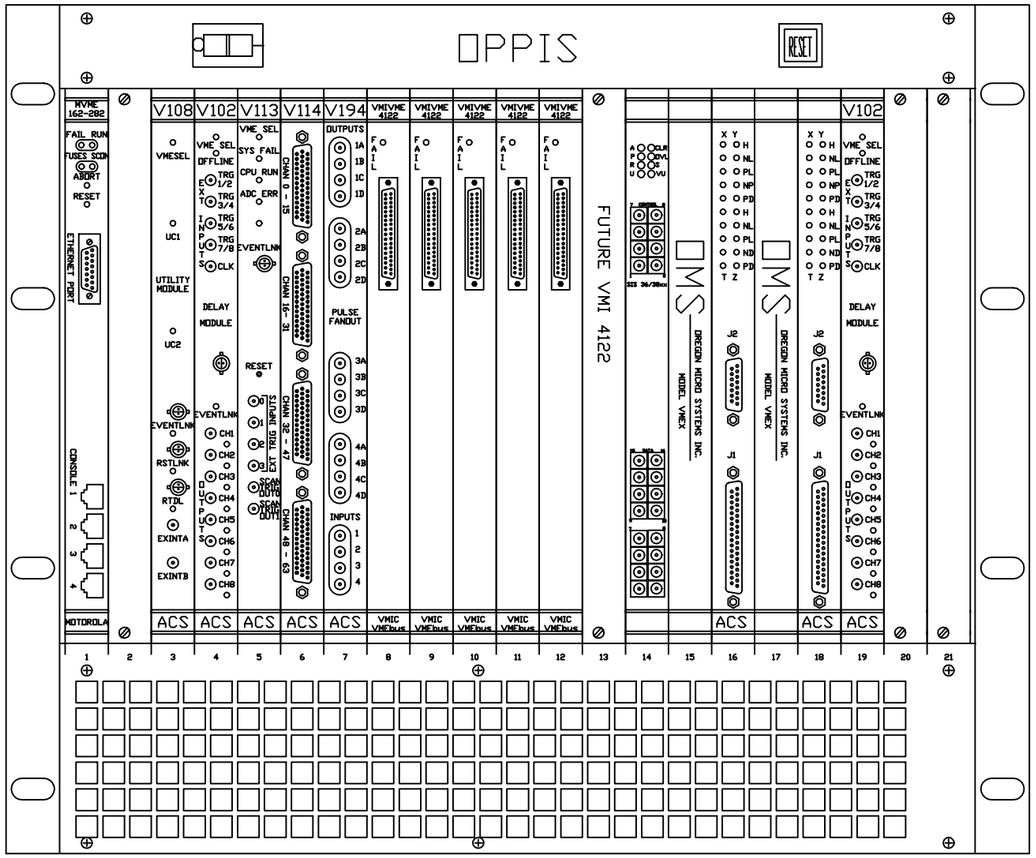

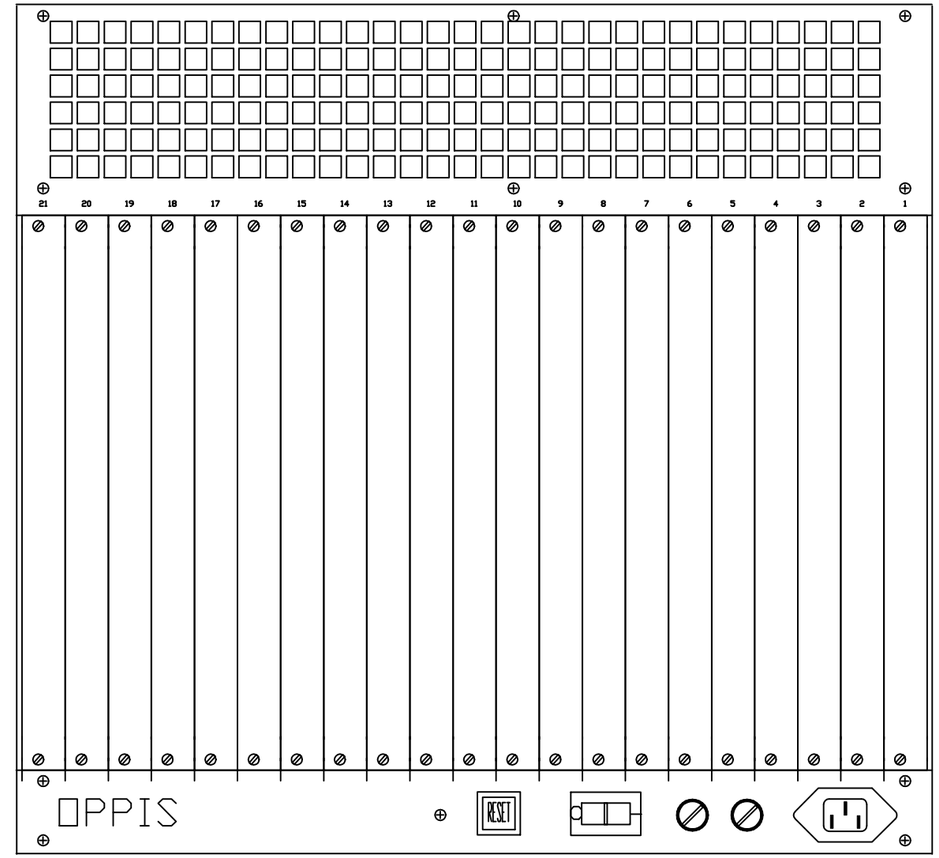

REAR VIEW

NOTE:

1. ALL UNUSED SLOTS, FRONT AND REAR

-3	-2	-1	REF DESIGNATOR	ITEM NO.	DESCRIPTION	MAT'L. DWG NO.,BNL NO.
		1	SLOT 14	12	SIS 3803 SCALER BOARD	SIS 3803
		2	SLOT 16,18	11	DMS TRANSISTION MODULE	TMEX-2E
		2	SLOT 15, 17	10	DMS STEPPER MOTOR CONTROLLER	VMEX-2E
		x	SEE NOTE 1	9	VME BLANK PANEL (ELECTRO-SPACE ESFE-2985)	
		5	SLOT 8-12	8	VMIC 4122 DAC BOARD	VMIC 4122
		1	SLOT 7	7	V194 PULSE FANOUT MODULE	94028196
		1	SLOT 6	6	V114 MADC A/D CONVERTER MODULE	94028226
		1	SLOT 5	5	V113 MADC CONTROLLER MODULE	94028140
		2	SLOT 4, 19	4	V102 DELAY MODULE	94028072
		1	SLOT 3	3	V108 UTILITY MODULE	94028094
		1	SLOT 1	2	FRONT END COMPUTER	MVME-162-282
		1	N/A	1	VME CHASSIS	RHIC-93008000

QTY REQD

INTERPRET IN GENERAL ACCORDANCE WITH ASME Y14.24M-1989

UNLESS OTHERWISE SPECIFIED DIMENSIONS ARE IN INCHES

DECIMAL TOLERANCES
.X ±.030
.XX ±.015
.XXX ±.005
ANGULAR TOLERANCE
± .5°

NA FINISH

BREAK SHARP EDGES
MAX. XX MIN. XX

OUTSTANDING ECN

Q.A. CATEGORY A-3

		DATE
DRAWN BY	PAPE	03/16/01
CHECKED BY		
DESIGN APPROVAL		
ENGINEER APPROVAL		
SUPVR. APPROVAL		

NEXT ASSEMBLY

BROOKHAVEN NATIONAL LABORATORY
UPTON, N.Y. 11973

OPPIS CONTROLS

LINAC

OPPIS CHASSIS CST-930-OPPIS

SIZE A | DRAWING NUMBER | REV. A

MATERIAL: ——— SCALE: NA WEIGHT: – SHEET 4 OF 18

*AUTOCAD

REV.	ZONE	ECN NO.	DATE	BY	CKR	APP.

C-A, BNL 3/16/01 11:26 AM FRONT END.dwg

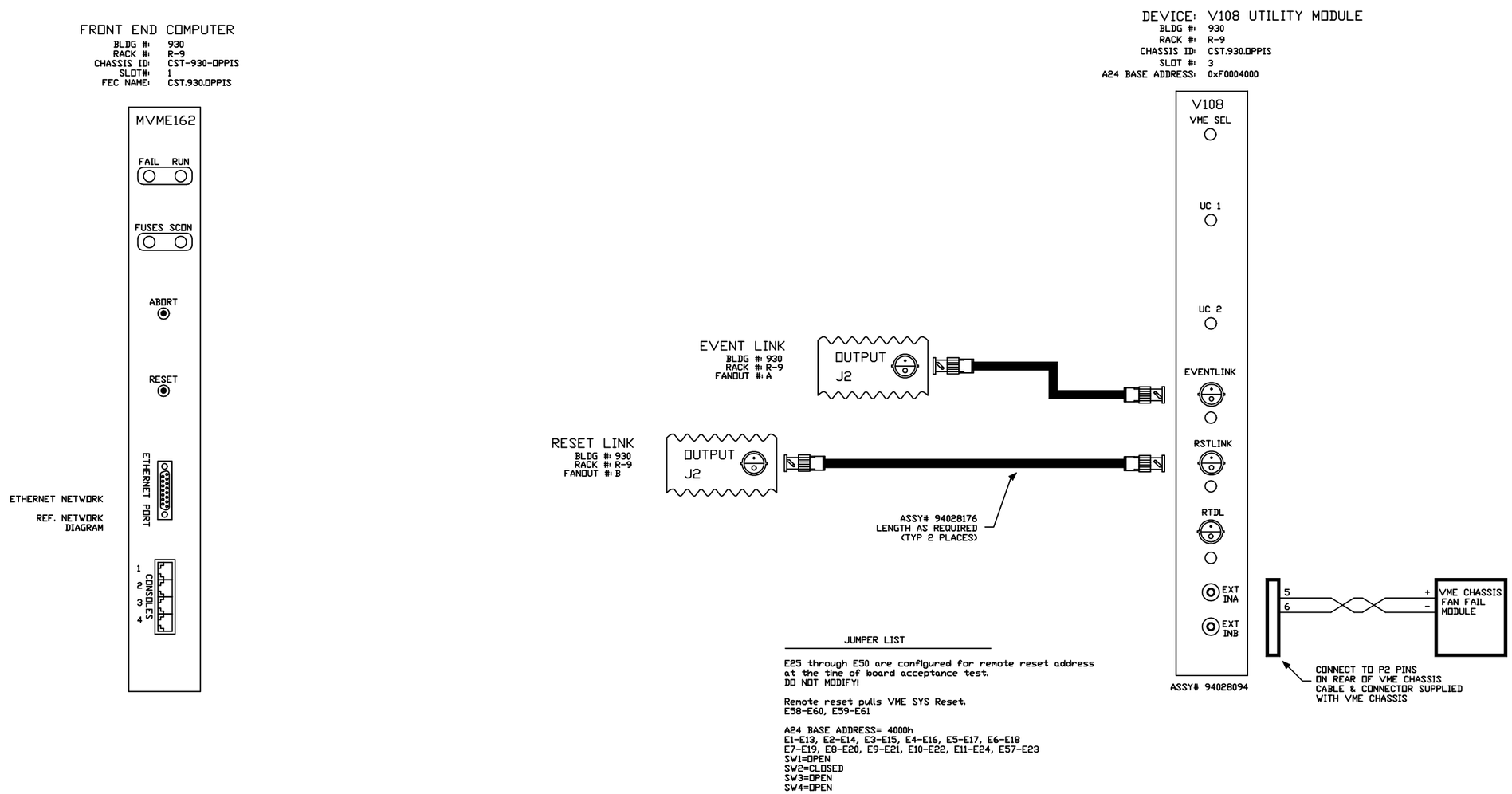

JUMPER LIST

E25 through E50 are configured for remote reset address at the time of board acceptance test.
DO NOT MODIFY!

Remote reset pulls VME SYS Reset.
E58-E60, E59-E61

A24 BASE ADDRESS= 4000h
E1-E13, E2-E14, E3-E15, E4-E16, E5-E17, E6-E18
E7-E19, E8-E20, E9-E21, E10-E22, E11-E24, E57-E23
SW1=OPEN
SW2=CLOSED
SW3=OPEN
SW4=OPEN

-3	-2	-1	REF DESIGNATOR	ITEM NO.	DESCRIPTION	MAT'L DWG NO./INL NO.
QTY REQD						

INTERPRET IN GENERAL ACCORDANCE WITH ASME Y14.24M-1989

UNLESS OTHERWISE SPECIFIED DIMENSIONS ARE IN INCHES

DECIMAL TOLERANCES
.X ±.030
.XX ±.015
.XXX ±.005
ANGULAR TOLERANCE
± .5°

NA FINISH — BREAK SHARP EDGES — MAX. XX MIN. XX

OUTSTANDING ECN

Q.A. CATEGORY A-3

		DATE
DRAWN BY	PAPE	03/16/01
CHECKED BY		
DESIGN APPROVAL		
ENGINEER APPROVAL		
SUPVR. APPROVAL		

NEXT ASSEMBLY

BROOKHAVEN NATIONAL LABORATORY
UPTON, N.Y. 11973

OPPIS CONTROLS WIRING DIAGRAM
VME CHASSIS CST.930.OPPIS
FT END COMP/V108 UTIL MODULE

SIZE A — DRAWING NUMBER — REV. A

MATERIAL: ——— SCALE: NA WEIGHT: – SHEET 5 OF 18

*AUTOCAD

C-A, BNL 3/16/01 11:24 AM EVENT_LINK_1A.dwg

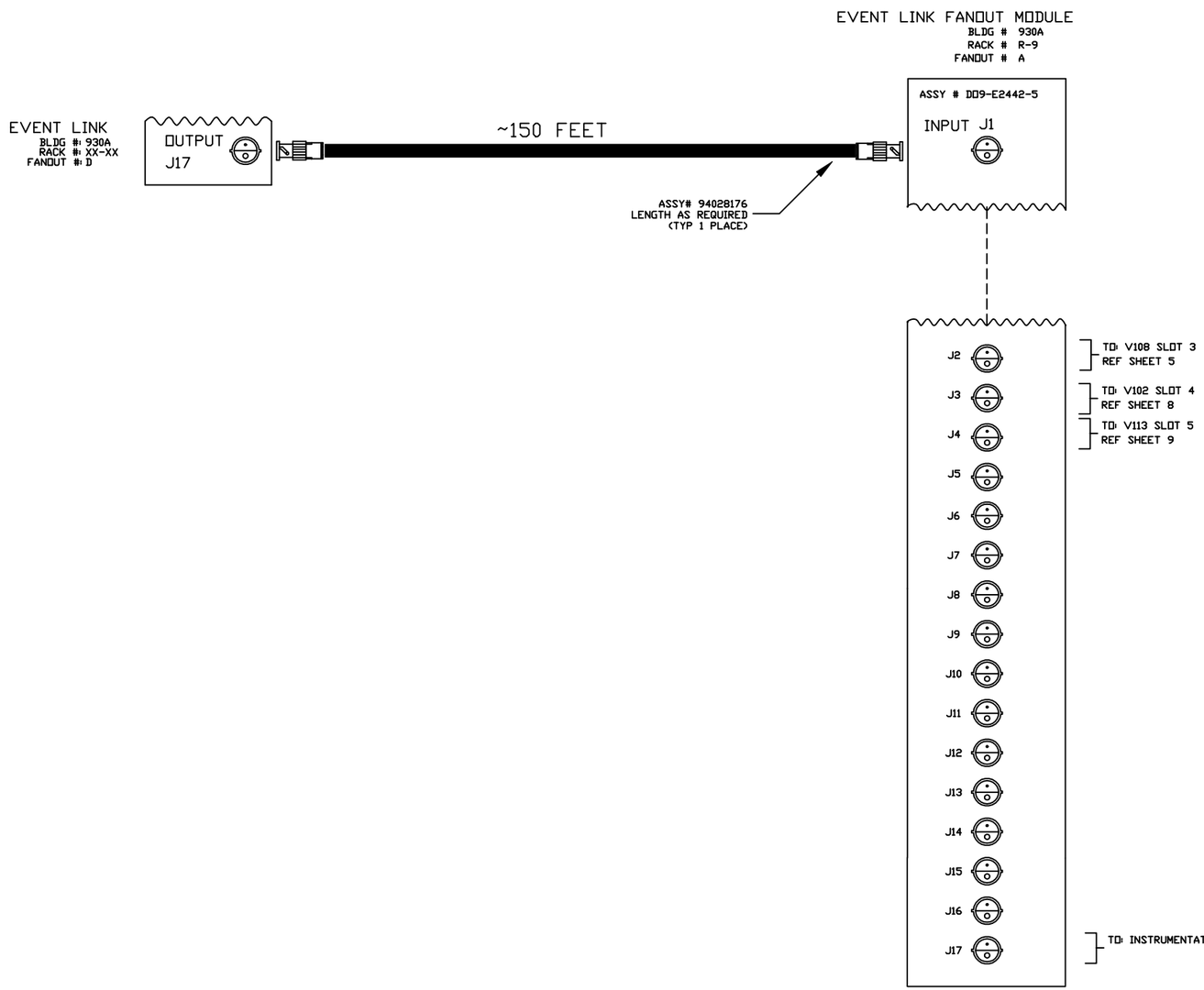

REV.	ZONE	ECN NO.	DATE	BY	CKR	APP.

-3	-2	-1	REF DESIGNATOR	ITEM NO.	DESCRIPTION	MAT'L. DWG NO.,BNL NO.
QTY REQD						

INTERPRET IN GENERAL ACCORDANCE WITH ASME Y14.24M-1989

UNLESS OTHERWISE SPECIFIED DIMENSIONS ARE IN INCHES

DECIMAL TOLERANCES
.X ±.030
.XX ±.015
.XXX ±.005
ANGULAR TOLERANCE
± .5°

NA FINISH

BREAK SHARP EDGES
MAX. XX MIN. XX

OUTSTANDING ECN

Q.A. CATEGORY A-3

		DATE
DRAWN BY	PAPE	03/16/01
CHECKED BY		
DESIGN APPROVAL		
ENGINEER APPROVAL		
SUPVR. APPROVAL		

NEXT ASSEMBLY

BROOKHAVEN NATIONAL LABORATORY
UPTON, N.Y. 11973

C-A CONTROLS WIRING DIAGRAM

OPPIS

EVENT LINK

SIZE A | DRAWING NUMBER | REV. A

MATERIAL: ——— SCALE: WEIGHT: – SHEET 6 OF 18

*AUTOCAD

REV.	ZONE	ECN NO.	DATE	BY	CKR	APP.

C-A, BNL 3/16/01 11:34 AM RESET_LINK_1A.dwg

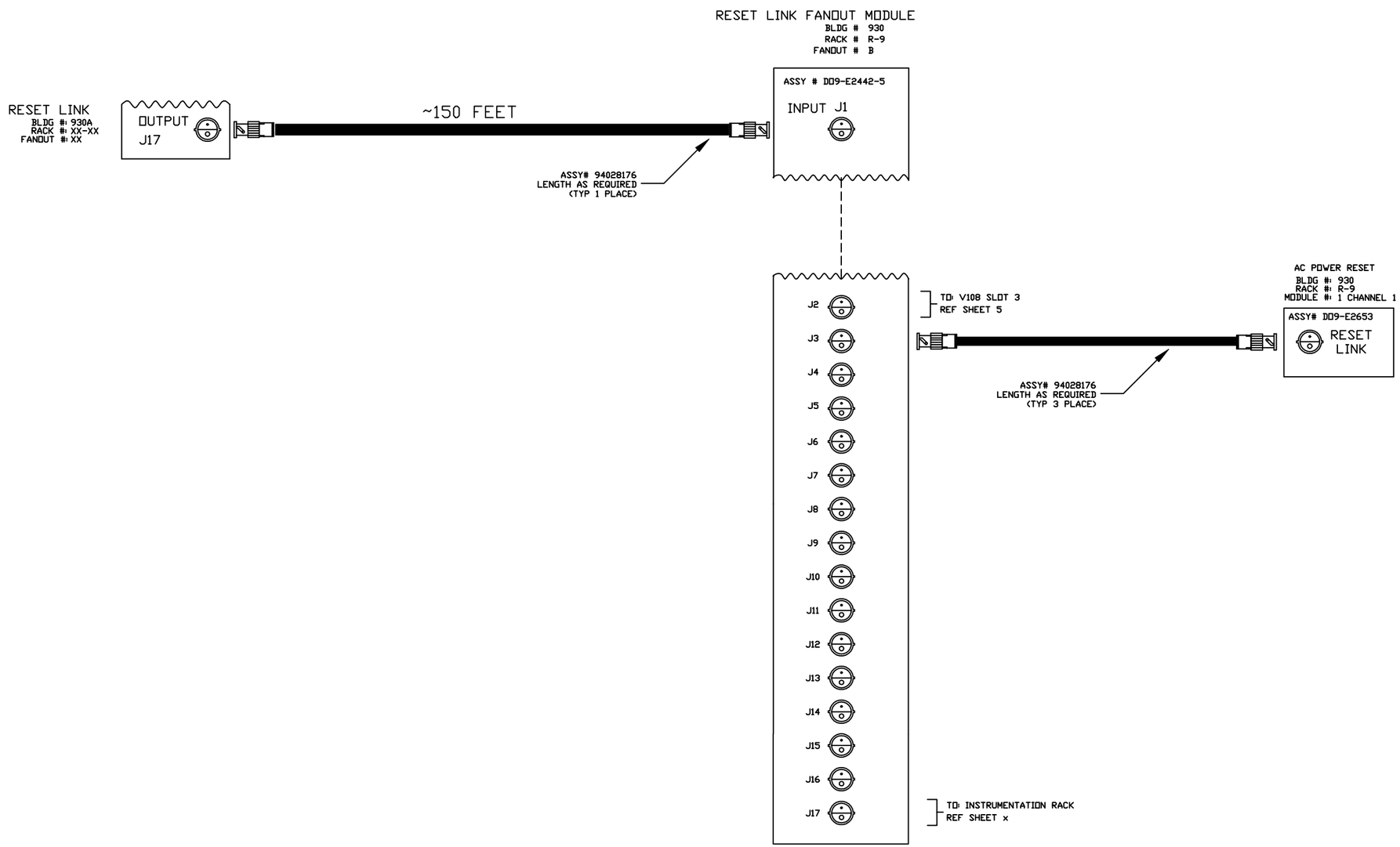

-3	-2	-1	REF DESIGNATOR	ITEM NO.	DESCRIPTION	MAT'L. DWG NO.,BNL NO.
QTY REQD						

INTERPRET IN GENERAL ACCORDANCE WITH ASME Y14.24M-1989

UNLESS OTHERWISE SPECIFIED DIMENSIONS ARE IN INCHES

DECIMAL TOLERANCES
.X ±.030
.XX ±.015
.XXX ±.005
ANGULAR TOLERANCE
± .5°

NA FINISH

BREAK SHARP EDGES
MAX. XX MIN. XX

OUTSTANDING ECN

Q.A. CATEGORY A-3		DATE
DRAWN BY	PAPE	03/16/01
CHECKED BY		
DESIGN APPROVAL		
ENGINEER APPROVAL		
SUPVR. APPROVAL		
NEXT ASSEMBLY		

BROOKHAVEN NATIONAL LABORATORY
UPTON, N.Y. 11973

C-A CONTROLS WIRING DIAGRAM

OPPIS

RESET LINK

SIZE A | DRAWING NUMBER | REV. A

MATERIAL: ——— SCALE: WEIGHT: – SHEET 7 OF 18

*AUTOCAD

REV.	ZONE	ECN NO.	DATE	BY	CKR	APP.

C-A, BNL 3/16/01 11:37 AM V102_V194.dwg

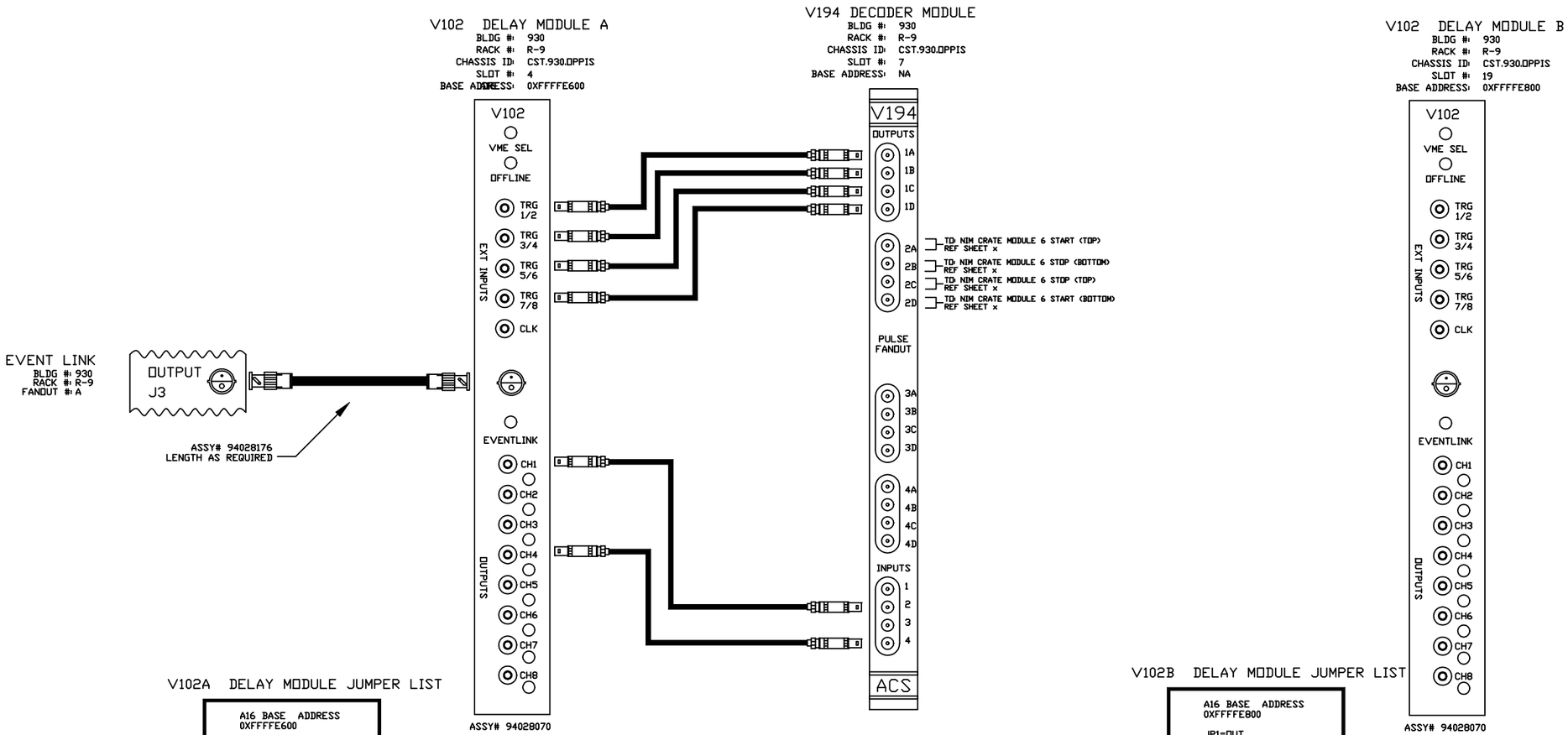

V102A DELAY MODULE JUMPER LIST

A16 BASE ADDRESS 0XFFFFE600 JP1=OUT JP2=OUT JP3=OUT JP4=IN JP5=IN JP6=OUT JP7=OUT
EVENT LINK INPUT FREQ. JP8=IN JP9=OUT JP10=OUT
JP11=IN JP12=IN JP13=OUT JP14=IN

V194 PULSE FANOUT MODULE JUMPER LIST

E1-E2 DGND, OUT E3-E4 AGND, IN E5-E6 DGND, OUT E7-E8 AGND, IN

V102B DELAY MODULE JUMPER LIST

A16 BASE ADDRESS 0XFFFFE800 JP1=OUT JP2=OUT JP3=OUT JP4=IN JP5=OUT JP6=IN JP7=IN
EVENT LINK INPUT FREQ. JP8=IN JP9=OUT JP10=OUT
JP11=IN JP12=IN JP13=OUT JP14=IN

-3	-2	-1	REF DESIGNATOR	ITEM NO.	DESCRIPTION	MAT'L DWG NO.,BNL NO.
QTY REQD						

INTERPRET IN GENERAL ACCORDANCE WITH ASME Y14.24M-1989

UNLESS OTHERWISE SPECIFIED DIMENSIONS ARE IN INCHES

DECIMAL TOLERANCES
.X ±.030
.XX ±.015
.XXX ±.005
ANGULAR TOLERANCE ± .5°

NA FINISH

BREAK SHARP EDGES MAX. XX MIN. XX

OUTSTANDING ECN

Q.A. CATEGORY A-3

		DATE
DRAWN BY	PAPE	03/16/01
CHECKED BY		
DESIGN APPROVAL		
ENGINEER APPROVAL		
SUPVR. APPROVAL		

NEXT ASSEMBLY

BROOKHAVEN NATIONAL LABORATORY
UPTON, N.Y. 11973

C-A CONTROLS WIRING DIAGRAM

OPPIS

V102 A & B, V194 MODULES

SIZE A | DRAWING NUMBER | REV. A

MATERIAL: ——— SCALE: NA WEIGHT: – SHEET 8 OF 18

*AUTOCAD

C-A, BNL 3/16/01 11:38 AM v113_v114.dwg

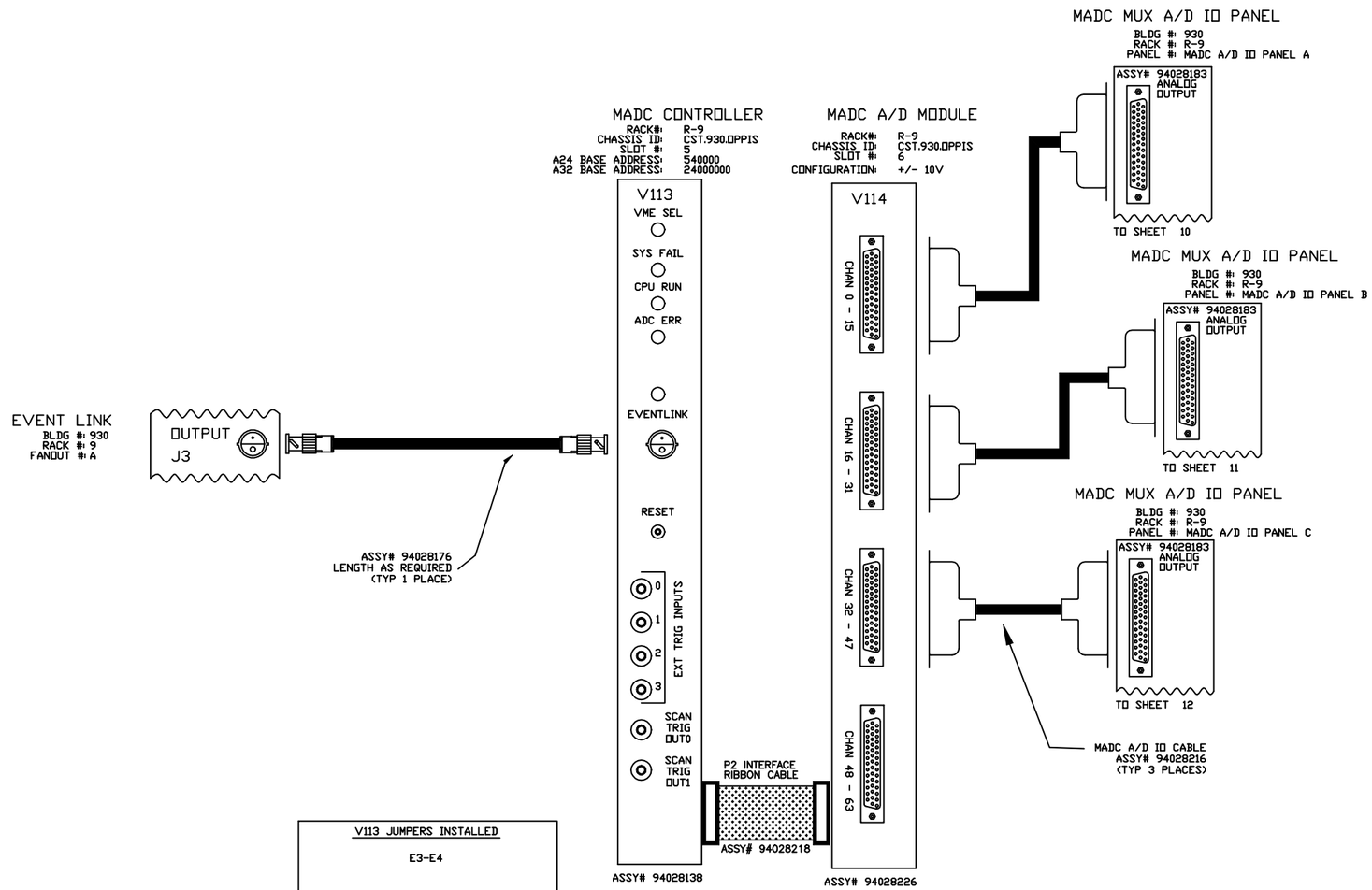

V113 JUMPERS INSTALLED

E3-E4

V113
BASE ADDRESS DIP SWITCHES

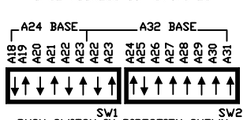

PUSH SWITCH IN DIRECTION SHOWN

V114 JUMPERS INSTALLED

J1, J2, J4, J5, J9
J19, J15, J21

ALL OTHER JUMPERS OUT

-3	-2	-1	REF DESIGNATOR	ITEM NO.	DESCRIPTION	MAT'L DWG NO./BNL NO.
QTY REQD						

INTERPRET IN GENERAL ACCORDANCE WITH ASME Y14.24M-1989

UNLESS OTHERWISE SPECIFIED DIMENSIONS ARE IN INCHES

DECIMAL TOLERANCES
.X ±.030
.XX ±.015
.XXX ±.005
ANGULAR TOLERANCE ± .5°

NA FINISH

BREAK SHARP EDGES MAX. XX MIN. XX

OUTSTANDING ECN

Q.A. CATEGORY A-3

DRAWN BY PAPE DATE 03/16/01

CHECKED BY

DESIGN APPROVAL

ENGINEER APPROVAL

SUPVR. APPROVAL

NEXT ASSEMBLY

BROOKHAVEN NATIONAL LABORATORY
UPTON, N.Y. 11973

C-A CONTROLS WIRING DIAGRAM

OPPIS

V113 / V114

SIZE A

DRAWING NUMBER

REV. A

MATERIAL: ——— SCALE: N/A WEIGHT: – SHEET 9 OF 18

*AUTOCAD

REV.	ZONE	ECN NO.	DATE	BY	CKR	APP.

C-A, BNL 3/16/01 11:27 AM MADC_A.dwg

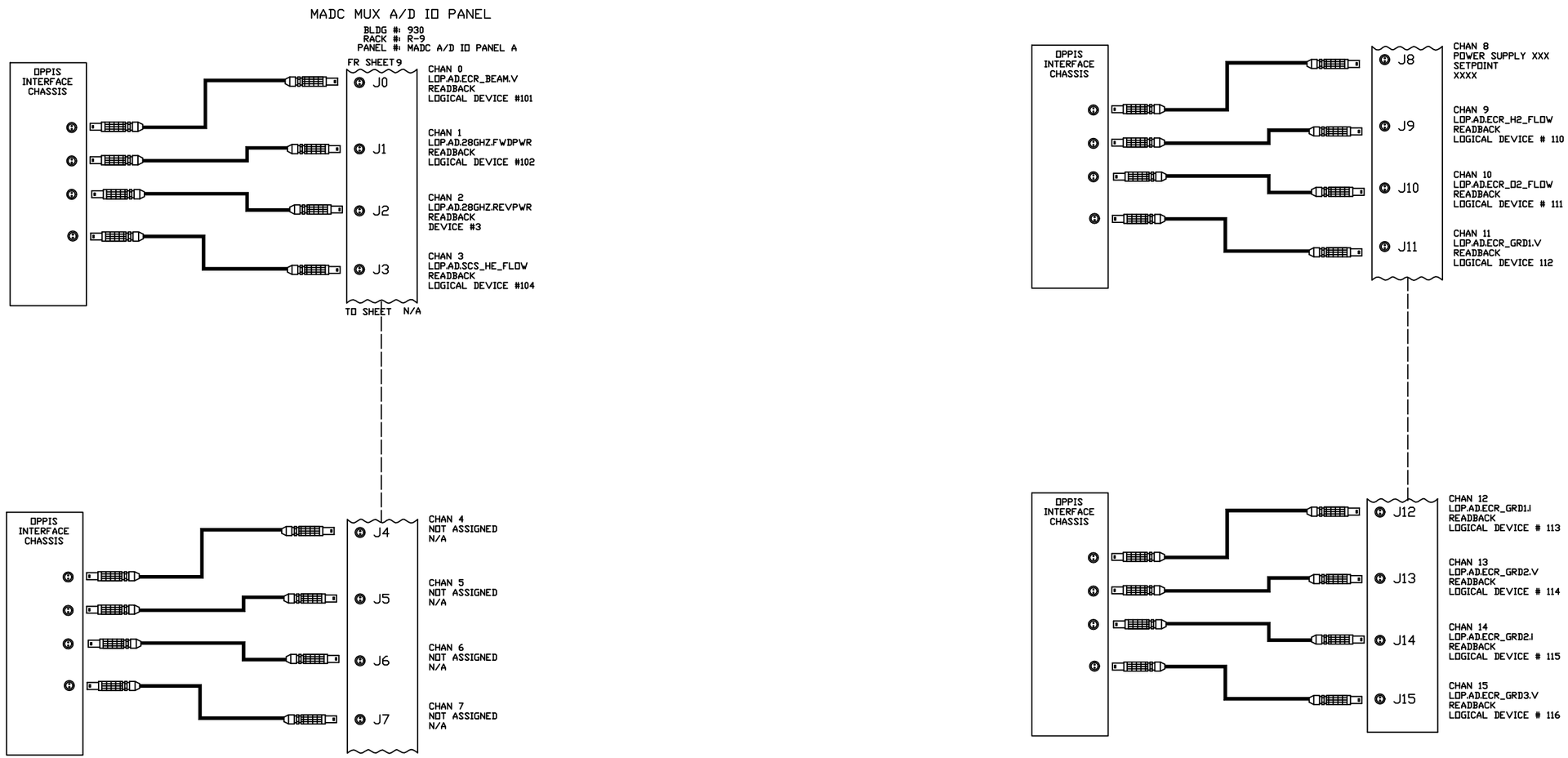

-3	-2	-1	REF DESIGNATOR	ITEM NO.	DESCRIPTION	MAT'L. DWG NO.,BNL NO.
QTY REQD						

INTERPRET IN GENERAL ACCORDANCE WITH ASME Y14.24M-1989

UNLESS OTHERWISE SPECIFIED DIMENSIONS ARE IN INCHES

DECIMAL TOLERANCES
.X ±.030
.XX ±.015
.XXX ±.005
ANGULAR TOLERANCE
± .5°

OUTSTANDING ECN

NA FINISH

BREAK SHARP EDGES
MAX. XX MIN. XX

Q.A. CATEGORY A-3

		DATE
DRAWN BY	PAPE	03/16/01
CHECKED BY		
DESIGN APPROVAL		
ENGINEER APPROVAL		
SUPVR. APPROVAL		

NEXT ASSEMBLY

BROOKHAVEN NATIONAL LABORATORY
UPTON, N.Y. 11973

C-A CONTROLS WIRING DIAGRAM

OPPIS

MADC PANEL A INTERFACE WIRING

SIZE A | DRAWING NUMBER | REV. A

MATERIAL: ——— SCALE: NA WEIGHT: – SHEET 10 OF 18

*AUTOCAD

REV.	ZONE	ECN NO.	DATE	BY	CKR	APP.

C-A, BNL 3/16/01 11:28 AM MADC_B.dwg

MADC MUX A/D ID PANEL

BLDG #: 930
RACK #: R-9
PANEL #: MADC A/D ID PANEL B

FR SHEET 9

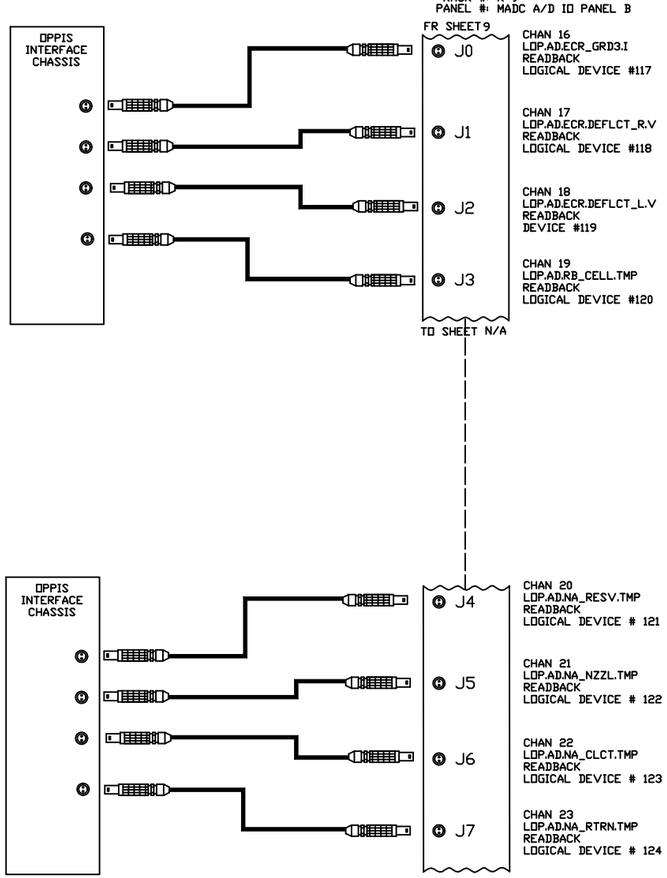

TO SHEET N/A

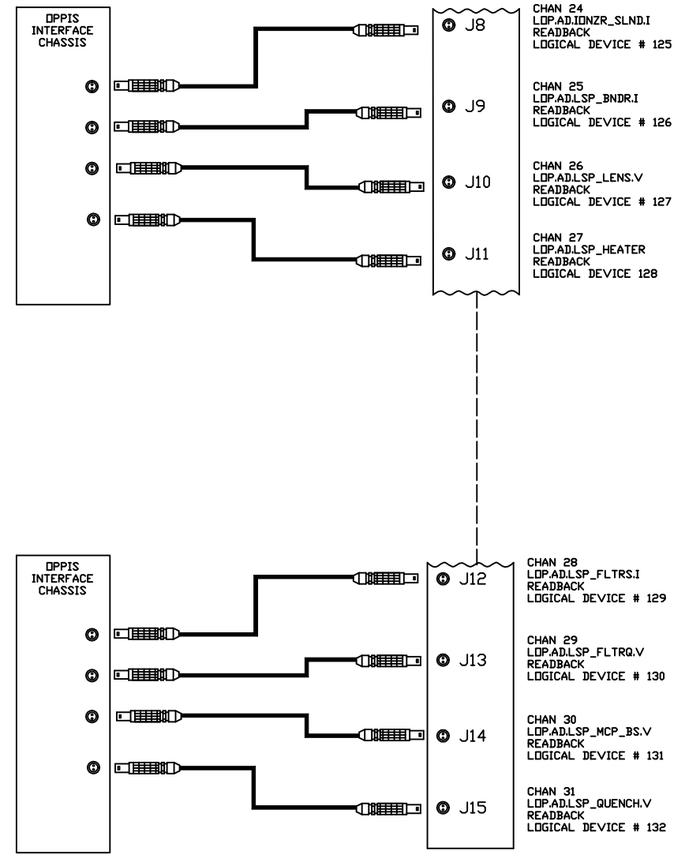

-3	-2	-1	REF DESIGNATOR	ITEM NO.	DESCRIPTION	MAT'L. DWG NO.,BNL NO.
QTY REQD						

INTERPRET IN GENERAL ACCORDANCE WITH ASME Y14.24M-1989

UNLESS OTHERWISE SPECIFIED DIMENSIONS ARE IN INCHES

DECIMAL TOLERANCES
.X ±.030
.XX ±.015
.XXX ±.005
ANGULAR TOLERANCE ± .5°

OUTSTANDING ECN

NA FINISH

BREAK SHARP EDGES MAX. XX MIN. XX

Q.A. CATEGORY A-3		DATE
DRAWN BY	PAPE	03/16/01
CHECKED BY		
DESIGN APPROVAL		
ENGINEER APPROVAL		
SUPVR. APPROVAL		

NEXT ASSEMBLY

BROOKHAVEN NATIONAL LABORATORY
UPTON, N.Y. 11973

C-A CONTROLS WIRING DIAGRAM

OPPIS

MADC PANEL B INTERFACE WIRING

SIZE A | DRAWING NUMBER | REV. A

MATERIAL: ——— SCALE: NA WEIGHT: – SHEET 11 OF 18

*AUTOCAD

REV.	ZONE	ECN NO.	DATE	BY	CKR	APP.

C-A, BNL 3/16/01 11:29 AM MADC_C.dwg

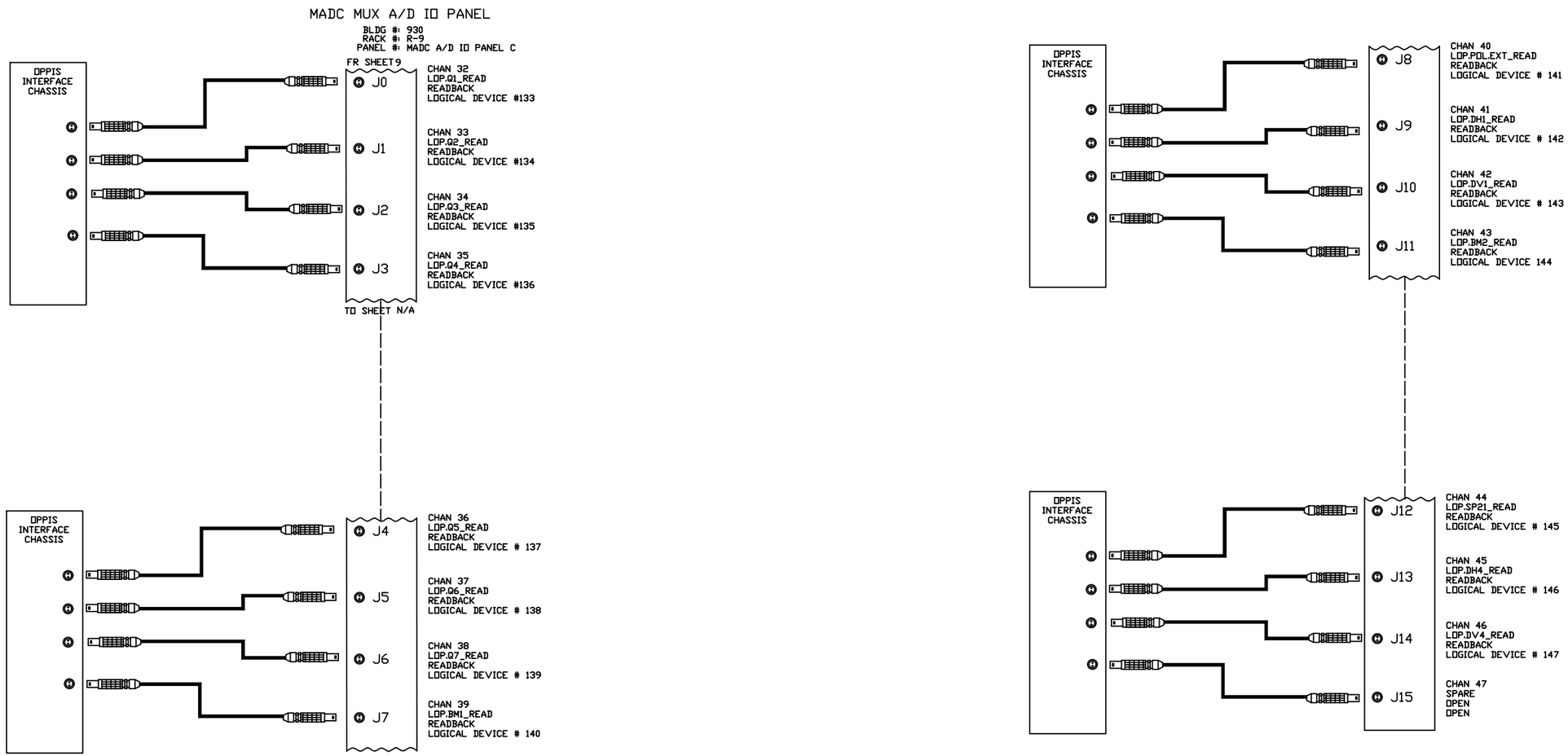

-3	-2	-1	REF DESIGNATOR	ITEM NO.	DESCRIPTION	MAT'L. DWG NO.,BNL NO.
QTY REQD						

INTERPRET IN GENERAL ACCORDANCE WITH ASME Y14.24M-1989

UNLESS OTHERWISE SPECIFIED DIMENSIONS ARE IN INCHES

DECIMAL TOLERANCES
.X ±.030
.XX ±.015
.XXX ±.005
ANGULAR TOLERANCE
± .5°

NA FINISH

BREAK SHARP EDGES
MAX. XX MIN. XX

OUTSTANDING ECN

Q.A. CATEGORY A-3

		DATE
DRAWN BY	PAPE	03/16/01
CHECKED BY		
DESIGN APPROVAL		
ENGINEER APPROVAL		
SUPVR. APPROVAL		

NEXT ASSEMBLY

BROOKHAVEN NATIONAL LABORATORY
UPTON, N.Y. 11973

C-A CONTROLS WIRING DIAGRAM

OPPIS

MADC PANEL C INTERFACE WIRING

SIZE A | DRAWING NUMBER | REV. A

MATERIAL: ——— SCALE: NA WEIGHT: – SHEET 12 OF 18

*AUTOCAD

VMIVME 4122 (8 CHAN., 12 BIT ANALOG OUTPUT MODULE # 1

BLDG #: 930
RACK #: R-9
CHASSIS ID: CST.930.VME
SLOT #: 8
A16 BASE ADDRESS: 0xFFFF0200
CONFIGURATION: 0 TO +10 VOLTS

C-A, BNL 3/16/01 11:40 AM VMI4122_1.dwg

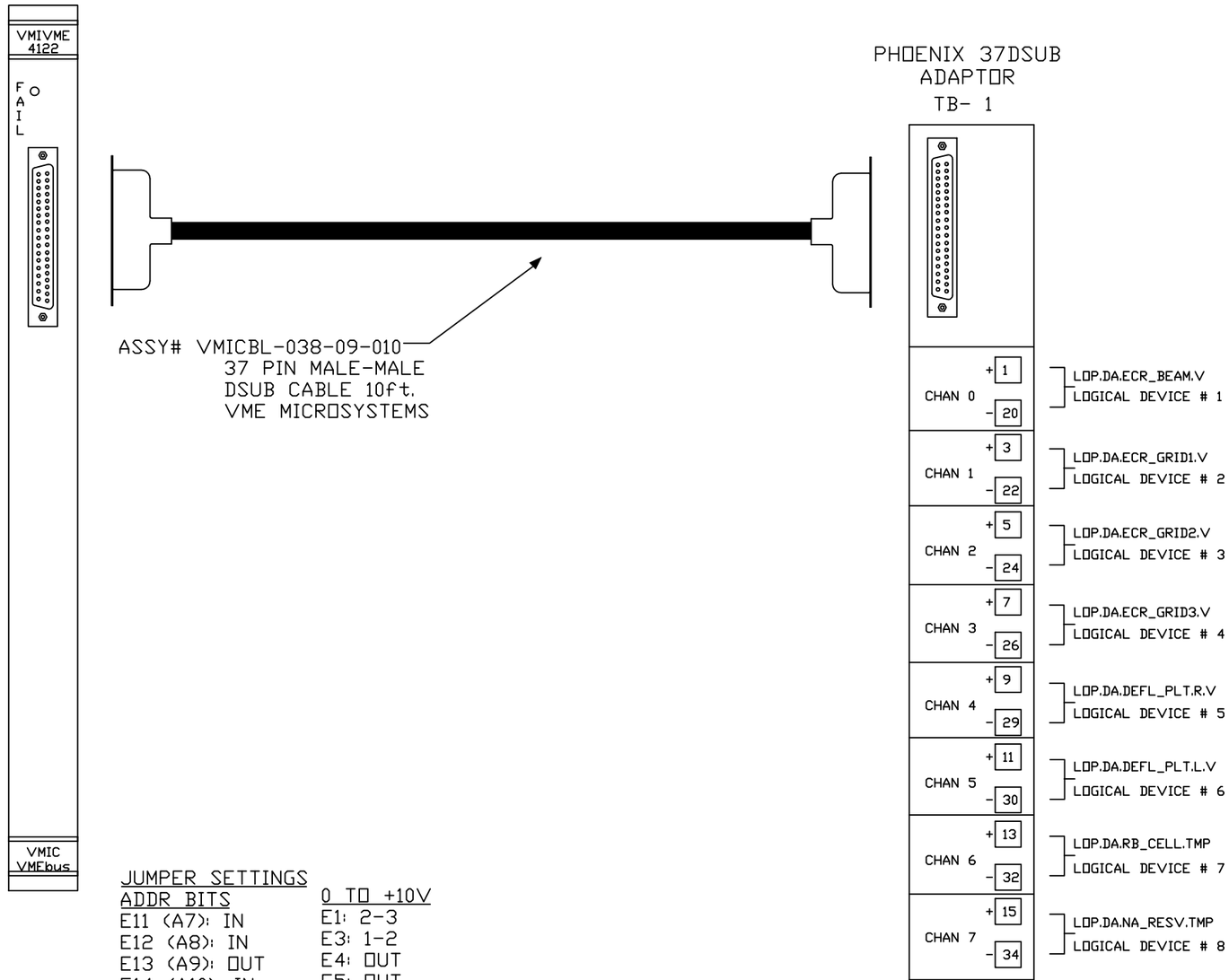

JUMPER SETTINGS

ADDR BITS	0 TO +10V
E11 (A7): IN	E1: 2-3
E12 (A8): IN	E3: 1-2
E13 (A9): OUT	E4: OUT
E14 (A10): IN	E5: OUT
E15 (A11): IN	E6: 1-2
E16 (A12): IN	E7: 1-2
E17 (A13): IN	E8: 2-3
E18 (A14): IN	E9: OUT
E19 (A15): IN	E10: OUT

NOTE: PIN 1 OF JUMPERS IS DESIGNATED BY A SQUARE PAD ON THE SOLDER SIDE OF THE BOARD

-3	-2	-1	REF DESIGNATOR	ITEM NO.	DESCRIPTION	MAT'L DWG NO.,BNL NO.
QTY REQD						

INTERPRET IN GENERAL ACCORDANCE WITH ASME Y14.24M-1989
UNLESS OTHERWISE SPECIFIED DIMENSIONS ARE IN INCHES
DECIMAL TOLERANCES .X ±.030 .XX ±.015 .XXX ±.005
ANGULAR TOLERANCE ± .5°
OUTSTANDING ECN
NA FINISH
BREAK SHARP EDGES MAX. XX MIN. XX

Q.A. CATEGORY A-3
DRAWN BY PAPE DATE 03/16/01
CHECKED BY
DESIGN APPROVAL
ENGINEER APPROVAL
SUPVR. APPROVAL
NEXT ASSEMBLY

BROOKHAVEN NATIONAL LABORATORY
UPTON, N.Y. 11973
C-A CONTROLS WIRING DIAGRAM
OPPIS, VMIVME 4122 # 1
ANALOG OUTPUTS

SIZE A DRAWING NUMBER REV. A
MATERIAL: SCALE: NA WEIGHT: - SHEET 13 OF 18

*AUTOCAD

VMIVME 4122 (8 CHAN., 12 BIT ANALOG OUTPUT MODULE # 2

BLDG #: 930
RACK #: R-9
CHASSIS ID: CST.930.VME
SLOT #: 9
A16 BASE ADDRESS: 0xFFFF0300
CONFIGURATION: 0 TO +10 VOLTS

C-A, BNL 3/16/01 11:42 AM VMI4122_2.dwg

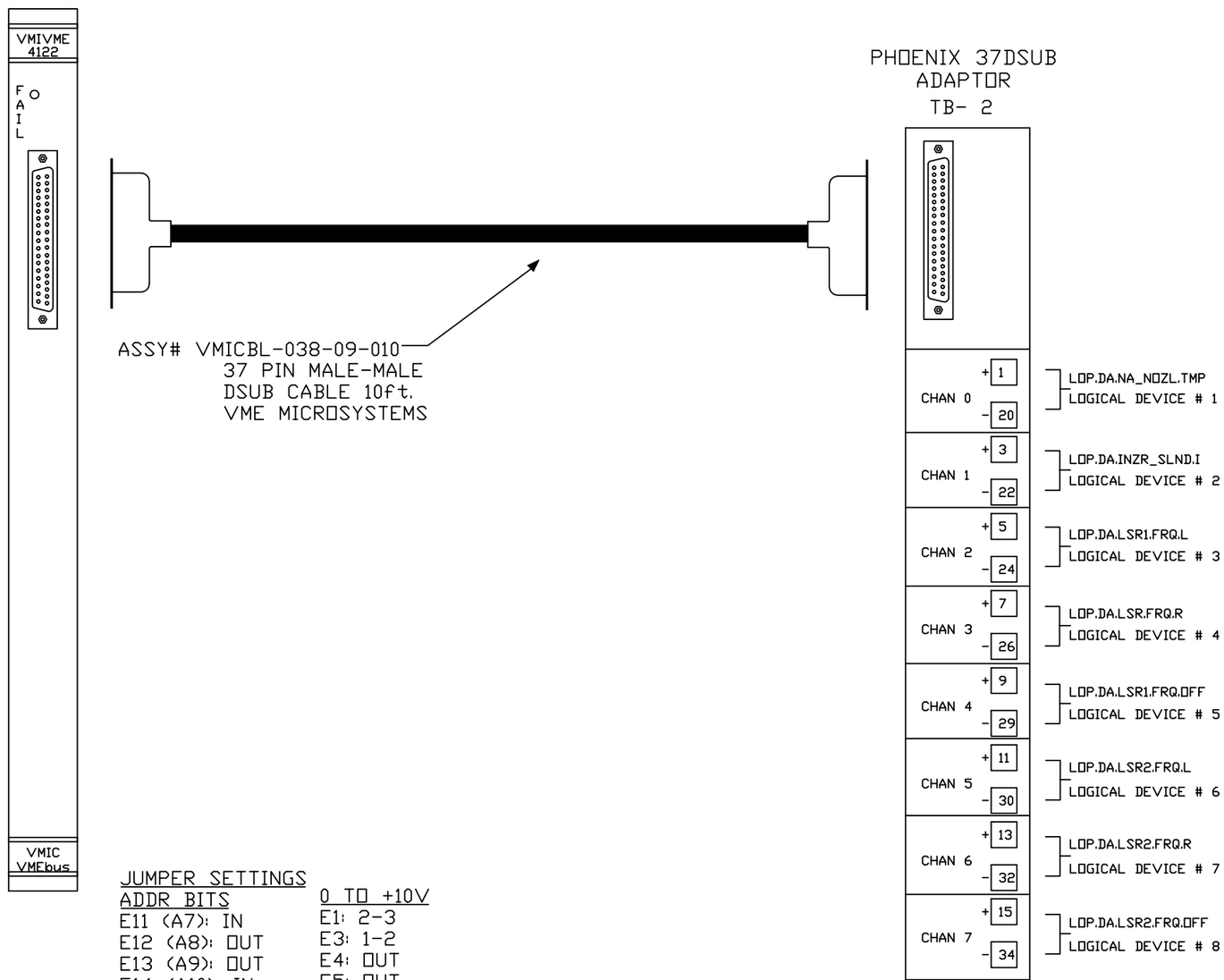

JUMPER SETTINGS

ADDR BITS	0 TO +10V
E11 (A7): IN	E1: 2-3
E12 (A8): OUT	E3: 1-2
E13 (A9): OUT	E4: OUT
E14 (A10): IN	E5: OUT
E15 (A11): IN	E6: 1-2
E16 (A12): IN	E7: 1-2
E17 (A13): IN	E8: 2-3
E18 (A14): IN	E9: OUT
E19 (A15): IN	E10: OUT

NOTE: PIN 1 OF JUMPERS IS DESIGNATED BY A SQUARE PAD ON THE SOLDER SIDE OF THE BOARD

REV.	ZONE	ECN NO.	DATE	BY	CKR	APP.

-3	-2	-1	REF DESIGNATOR	ITEM NO.	DESCRIPTION	MAT'L DWG NO.,BNL NO.
QTY REQD						

INTERPRET IN GENERAL ACCORDANCE WITH ASME Y14.24M-1989
UNLESS OTHERWISE SPECIFIED DIMENSIONS ARE IN INCHES
DECIMAL TOLERANCES .X ±.030 .XX ±.015 .XXX ±.005 ANGULAR TOLERANCE ± .5°
OUTSTANDING ECN
NA FINISH
BREAK SHARP EDGES MAX. XX MIN. XX

Q.A. CATEGORY A-3
DRAWN BY PAPE DATE 03/16/01
CHECKED BY
DESIGN APPROVAL
ENGINEER APPROVAL
SUPVR. APPROVAL
NEXT ASSEMBLY

BROOKHAVEN NATIONAL LABORATORY
UPTON, N.Y. 11973
C-A CONTROLS WIRING DIAGRAM
OPPIS, VMIVME 4122 # 2
ANALOG OUTPUTS

SIZE A DRAWING NUMBER REV. A
MATERIAL: SCALE: NA WEIGHT: - SHEET 14 OF 18

*AUTOCAD

VMIVME 4122 (8 CHAN., 12 BIT ANALOG OUTPUT MODULE # 3

BLDG #: 930
RACK #: R-9
CHASSIS ID: CST.930.VME
SLOT #: 10
A16 BASE ADDRESS: 0xFFFF0400
CONFIGURATION: 0 TO +10 VOLTS

C-A, BNL 3/16/01 1:35 PM VMI4122_3.dwg

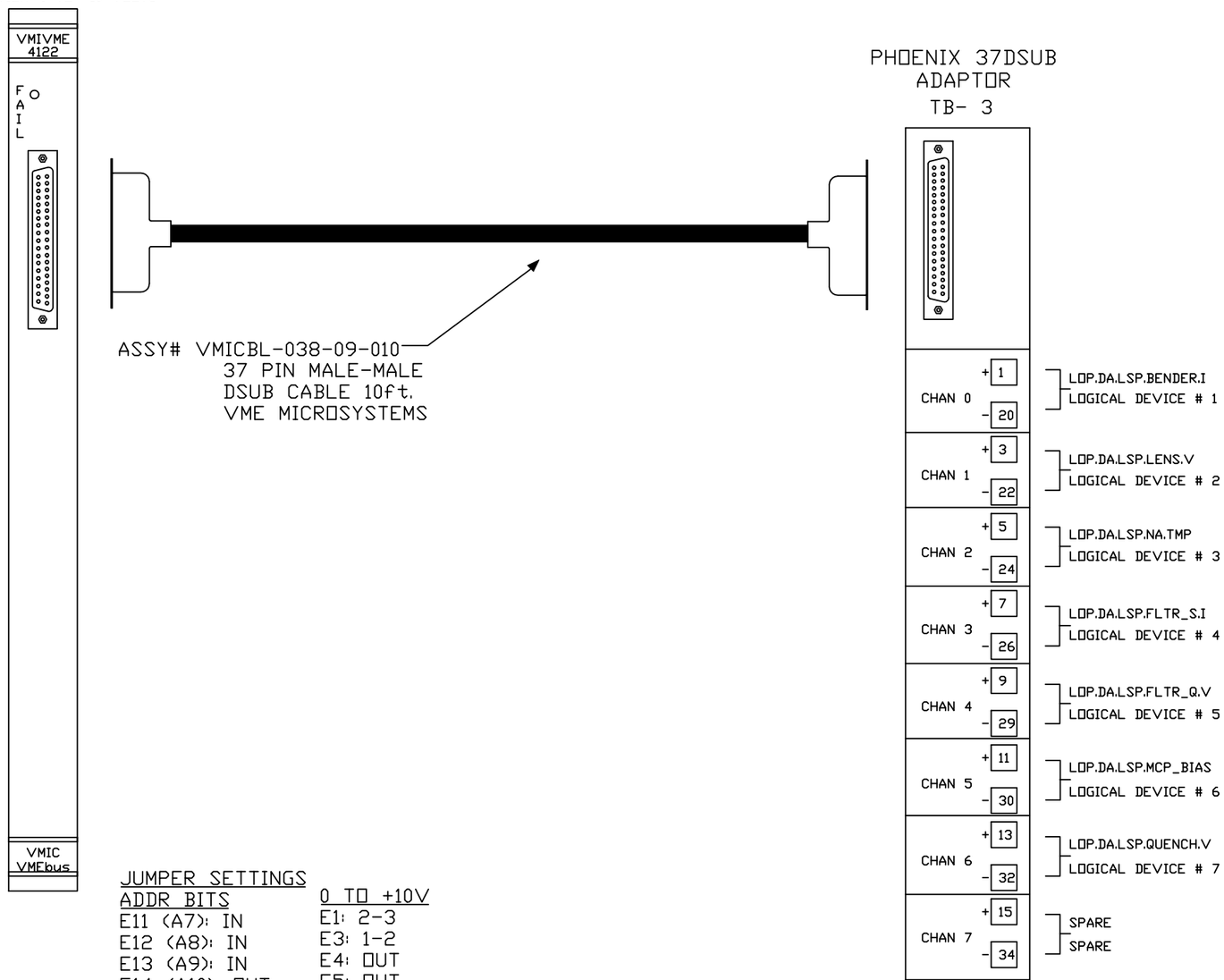

JUMPER SETTINGS

ADDR BITS	0 TO +10V
E11 (A7): IN	E1: 2-3
E12 (A8): IN	E3: 1-2
E13 (A9): IN	E4: OUT
E14 (A10): OUT	E5: OUT
E15 (A11): IN	E6: 1-2
E16 (A12): IN	E7: 1-2
E17 (A13): IN	E8: 2-3
E18 (A14): IN	E9: OUT
E19 (A15): IN	E10: OUT

NOTE: PIN 1 OF JUMPERS IS DESIGNATED BY A SQUARE PAD ON THE SOLDER SIDE OF THE BOARD

-3	-2	-1	REF DESIGNATOR	ITEM NO.	DESCRIPTION	MAT'L DWG NO.,BNL NO.
QTY REQD						

INTERPRET IN GENERAL ACCORDANCE WITH ASME Y14.24M-1989
UNLESS OTHERWISE SPECIFIED DIMENSIONS ARE IN INCHES
DECIMAL TOLERANCES .X ±.030 .XX ±.015 .XXX ±.005
ANGULAR TOLERANCE ± .5°
OUTSTANDING ECN
NA FINISH
BREAK SHARP EDGES MAX. XX MIN. XX

Q.A. CATEGORY A-3
DRAWN BY PAPE DATE 03/16/01
CHECKED BY
DESIGN APPROVAL
ENGINEER APPROVAL
SUPVR. APPROVAL
NEXT ASSEMBLY

BROOKHAVEN NATIONAL LABORATORY
UPTON, N.Y. 11973
C-A CONTROLS WIRING DIAGRAM
OPPIS, VMIVME 4122 # 3
ANALOG OUTPUTS

SIZE A DRAWING NUMBER REV. A
MATERIAL: SCALE: NA WEIGHT: - SHEET 15 OF 18

*AUTOCAD

VMIVME 4122 (8 CHAN., 12 BIT ANALOG OUTPUT MODULE # 4

BLDG #: 930
RACK #: R-9
CHASSIS ID: CST.930.VME
SLOT #: 11
A16 BASE ADDRESS: 0xFFFF0500
CONFIGURATION: 0 TO +10 VOLTS

C-A, BNL 3/16/01 1:36 PM VMI4122_4.dwg

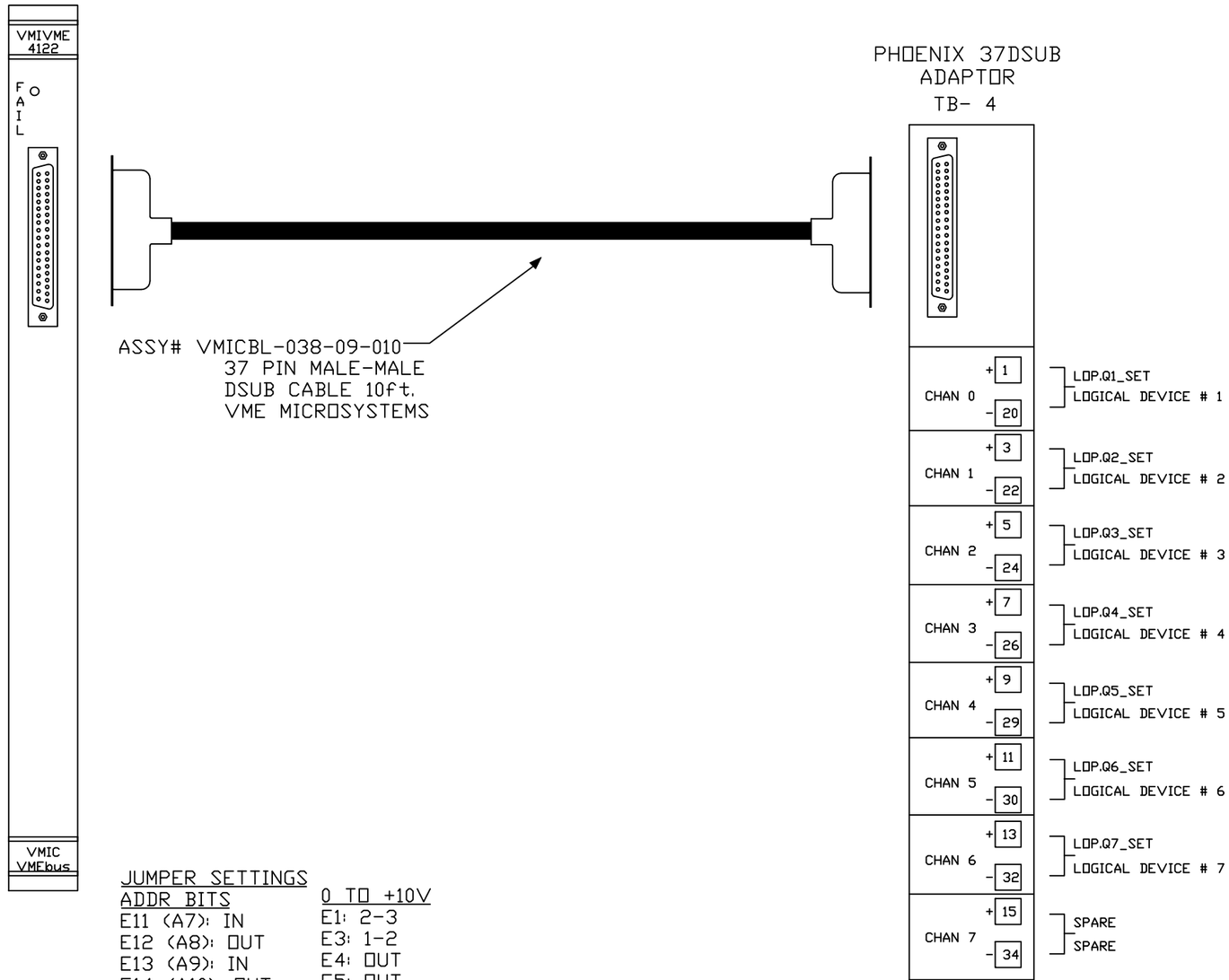

JUMPER SETTINGS

ADDR BITS	0 TO +10V
E11 (A7): IN	E1: 2-3
E12 (A8): OUT	E3: 1-2
E13 (A9): IN	E4: OUT
E14 (A10): OUT	E5: OUT
E15 (A11): IN	E6: 1-2
E16 (A12): IN	E7: 1-2
E17 (A13): IN	E8: 2-3
E18 (A14): IN	E9: OUT
E19 (A15): IN	E10: OUT

NOTE: PIN 1 OF JUMPERS IS DESIGNATED BY A SQUARE PAD ON THE SOLDER SIDE OF THE BOARD

-3	-2	-1	REF DESIGNATOR	ITEM NO.	DESCRIPTION	MAT'L DWG NO.,BNL NO.
QTY REQD						

INTERPRET IN GENERAL ACCORDANCE WITH ASME Y14.24M-1989
UNLESS OTHERWISE SPECIFIED DIMENSIONS ARE IN INCHES
DECIMAL TOLERANCES .X ±.030 .XX ±.015 .XXX ±.005
ANGULAR TOLERANCE ± .5°
OUTSTANDING ECN
NA FINISH
BREAK SHARP EDGES MAX. XX MIN. XX

Q.A. CATEGORY A-3
DRAWN BY PAPE DATE 03/16/01
CHECKED BY
DESIGN APPROVAL
ENGINEER APPROVAL
SUPVR. APPROVAL
NEXT ASSEMBLY

BROOKHAVEN NATIONAL LABORATORY
UPTON, N.Y. 11973
C-A CONTROLS WIRING DIAGRAM
OPPIS, VMIVME 4122 # 4
ANALOG OUTPUTS

SIZE A DRAWING NUMBER REV. A
MATERIAL: SCALE: NA WEIGHT: - SHEET 16 OF 18

*AUTOCAD

VMIVME 4122 (8 CHAN., 12 BIT ANALOG OUTPUT MODULE # 5

BLDG #: 930
RACK #: R-9
CHASSIS ID: CST.930.VME
SLOT #: 12
A16 BASE ADDRESS: 0xFFFF0600
CONFIGURATION: 0 TO +10 VOLTS

C-A, BNL 3/16/01 1:38 PM VMI4122_5.dwg

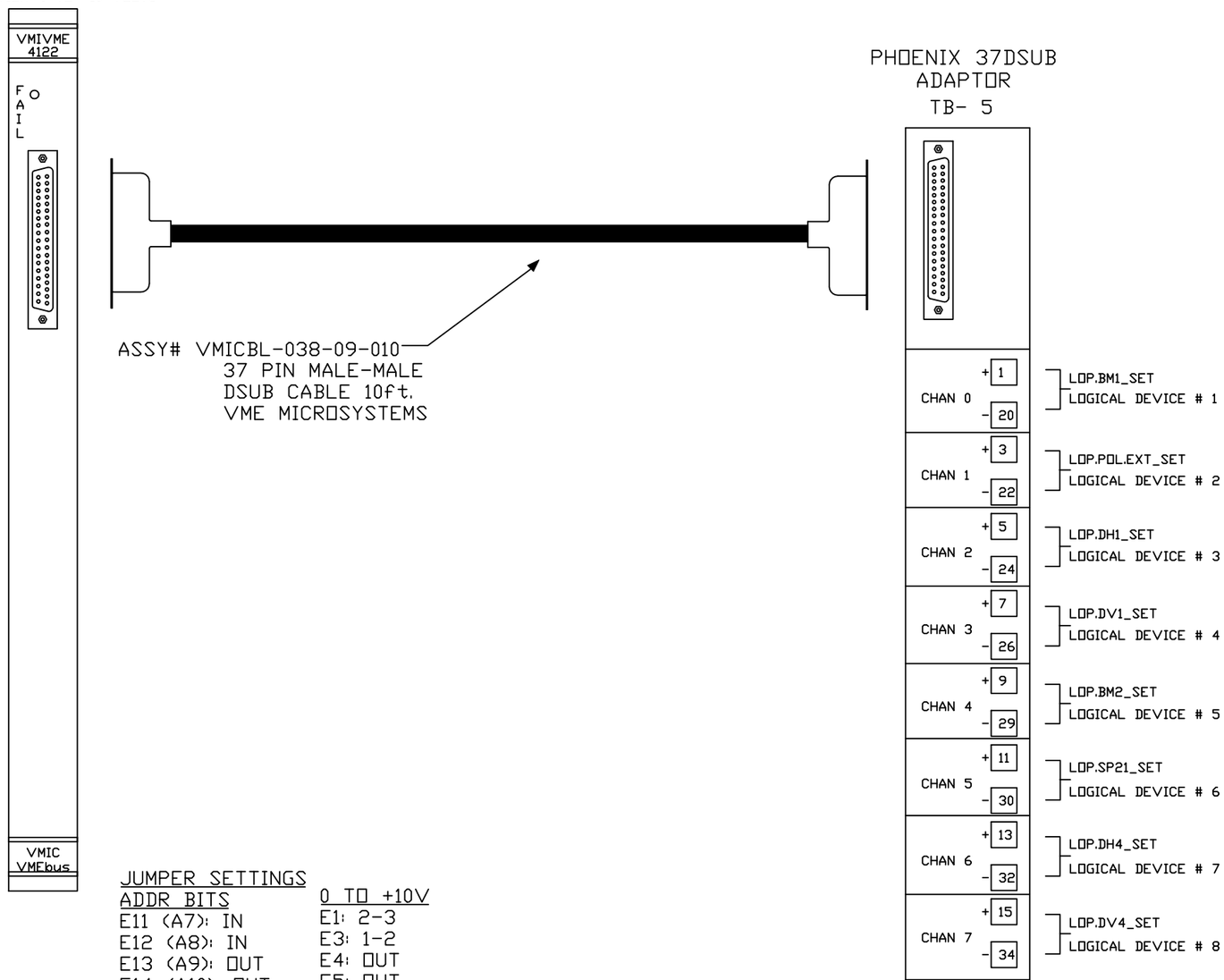

JUMPER SETTINGS

ADDR BITS	0 TO +10V
E11 (A7): IN	E1: 2-3
E12 (A8): IN	E3: 1-2
E13 (A9): OUT	E4: OUT
E14 (A10): OUT	E5: OUT
E15 (A11): IN	E6: 1-2
E16 (A12): IN	E7: 1-2
E17 (A13): IN	E8: 2-3
E18 (A14): IN	E9: OUT
E19 (A15): IN	E10: OUT

NOTE: PIN 1 OF JUMPERS IS DESIGNATED BY A SQUARE PAD ON THE SOLDER SIDE OF THE BOARD

-3	-2	-1	REF DESIGNATOR	ITEM NO.	DESCRIPTION	MAT'L DWG NO.,BNL NO.
QTY REQD						

INTERPRET IN GENERAL ACCORDANCE WITH ASME Y14.24M-1989
UNLESS OTHERWISE SPECIFIED DIMENSIONS ARE IN INCHES
DECIMAL TOLERANCES .X ±.030 .XX ±.015 .XXX ±.005
ANGULAR TOLERANCE ± .5°
OUTSTANDING ECN
NA FINISH
BREAK SHARP EDGES MAX. XX MIN. XX

Q.A. CATEGORY A-3
DRAWN BY PAPE DATE 03/16/01
CHECKED BY
DESIGN APPROVAL
ENGINEER APPROVAL
SUPVR. APPROVAL
NEXT ASSEMBLY

BROOKHAVEN NATIONAL LABORATORY
UPTON, N.Y. 11973
C-A CONTROLS WIRING DIAGRAM
OPPIS, VMIVME 4122 # 5
ANALOG OUTPUTS

SIZE A DRAWING NUMBER REV. A
MATERIAL: SCALE: NA WEIGHT: - SHEET 17 OF 18

*AUTOCAD

REV.	ZONE	ECN NO.	DATE	BY	CKR	APP.

C-A, BNL 3/16/01 11:19 AM MOTOR_1.dwg

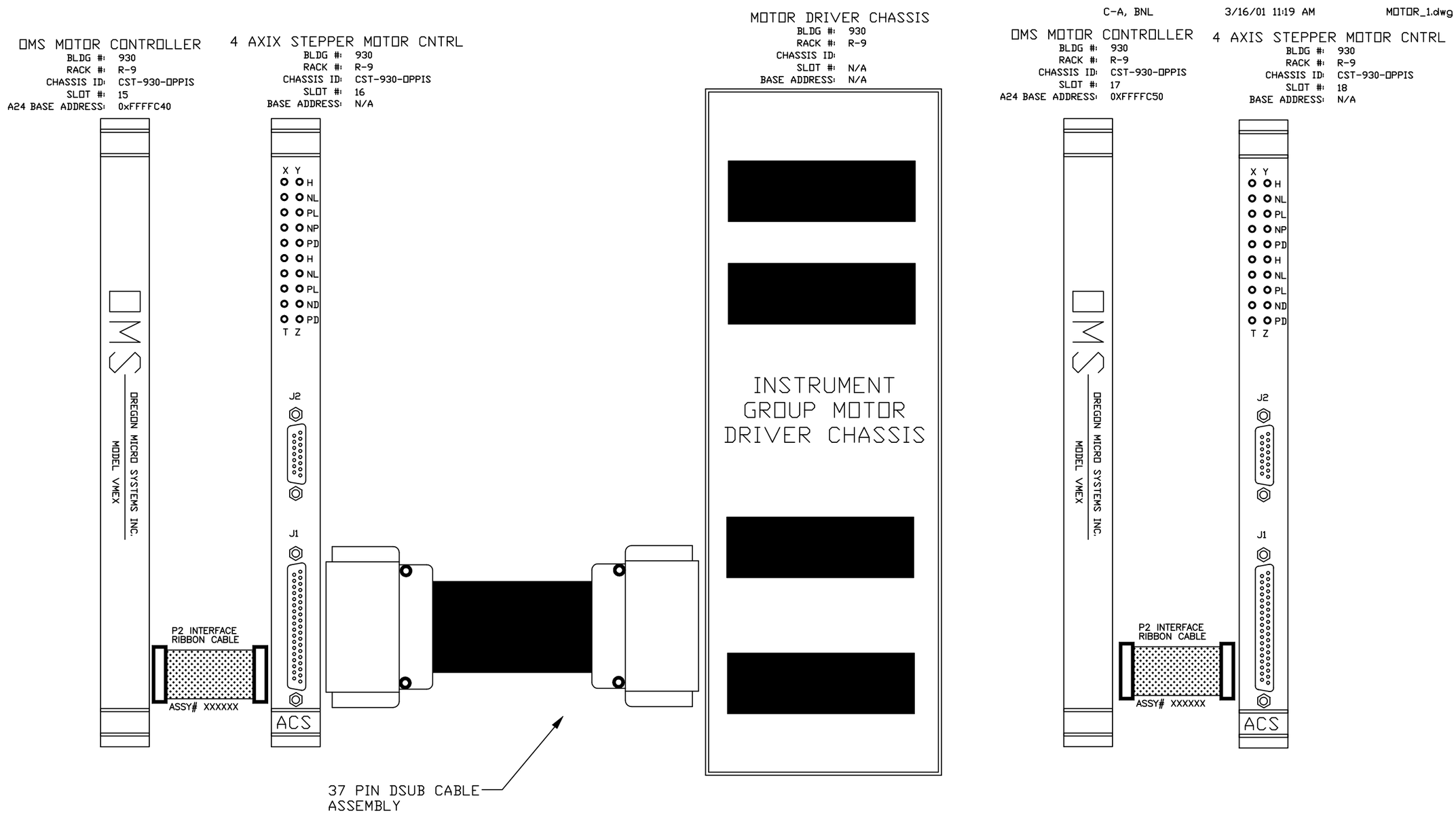

-3	-2	-1	REF DESIGNATOR	ITEM NO.	DESCRIPTION	MAT'L. DWG NO.,SPEC. NO.
QTY REQD						

INTERPRET IN GENERAL ACCORDANCE WITH ASME Y14.24M-1989

UNLESS OTHERWISE SPECIFIED DIMENSIONS ARE IN INCHES

DECIMAL TOLERANCES
.X ±.030
.XX ±.015
.XXX ±.005
ANGULAR TOLERANCE
± .5°

OUTSTANDING ECN

NA FINISH

BREAK SHARP EDGES
MAX. XX MIN. XX

Q.A. CATEGORY A-3

		DATE
DRAWN BY	PAPE	03/16/01
CHECKED BY		
DESIGN APPROVAL		
ENGINEER APPROVAL		
SUPVR. APPROVAL		

NEXT ASSEMBLY

BROOKHAVEN NATIONAL LABORATORY
UPTON, N.Y. 11973

OPPIS CONTROLS WIRING DIAGRAM

OPPIS

MOTOR CONTROLLERS

SIZE D

DRAWING NUMBER

REV. A

MATERIAL: ——— SCALE: WEIGHT: – SHEET 18 OF 18

*AUTOCAD