C-A Controls Section
Bldg 911B Wiring Diagrams
AGS Beam Inhibit System

Brookhaven National Laboratory, Upton, New York 11973

Created By: Ralph Schoenfeld
Last Updated 10/13/04

Controls rack
- 🕮 Rack 5484 70”assembly
- 🕮 Rack 3494 77”assembly

- 🕮 **VME Chassis CFE-911-AGSBI1**
- 🕮 Front End Computer, V108 Utility (Sheet 1)
- 🕮 V113/V114 MADC (Sheet 2)
- 🕮 VMIVME 2170A Digital Output (Sheet 3)
- 🕮 VMIVME 4122 Analog Output (Sheet 4)
- 🕮 V202 And V294 Timing Modules (Sheet 5)
- 🕮 V118 Loss Monitor Controller (Sheet 6)
- 🕮 V119 Loss Monitor Analog Module A (Sheet 7)
- 🕮 V119 Loss Monitor Analog Module B (Sheet 8)
- 🕮 AGS Beam Extraction Intensity Module (Sheet 9)
- 🕮 Bit 3 Bus Extender (Sheet 10)

- 🕮 **VME Chassis CEX-911-AGSBI1**
- 🕮 Bit 3 Bus Extender (Sheet 10)
- 🕮 V109 Utility (Sheet 11)
- 🕮 V194 Pulse Fan out (Sheet 12)
- 🕮 Permit/Quench Pulse module (Sheet 13)
- 🕮 V120/T120 Permit Modules (Sheet 14)
- 🕮 Permit Interface Panel (Sheets 15, 16)
- 🕮 AGS Beam Inhibit Interface System (Sheets 17-21)
- 🕮 RHIC Loss Monitor Patch Panel (Sheet 22)
- 🕮 H20 / G10 Difference Inputs (Sheet 26)

REV.	ZONE	ECN NO.	DATE	BY	CKR	APP.

Schoenfeld, Controls 10/5/2004 8:42 AM D09-E2747.dwg

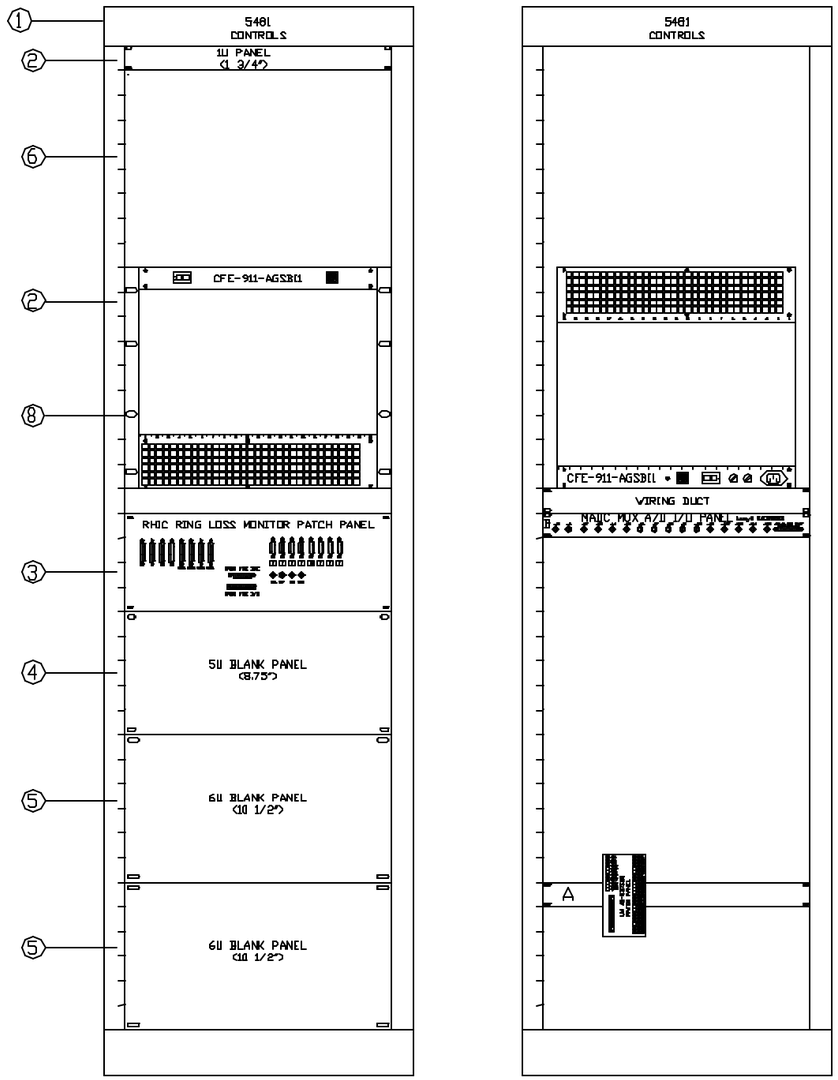

FRONT VIEW

REAR VIEW

-3	-2	-1	REF DESIGNATION	ITEM NO.	DESCRIPTION	MANF. PART NO./INT. NO.
		AR	N/A	14	10-32 X 1/2" BINDING HEAD MACHINE SCREWS	T-32276
		1	N/A	16	GROMMET PANEL	XX
		1	N/A	13	BLM PATCH PANEL	X
		2	N/A	12	WIRING DUCT SNAP CLIPS 1.5"W (PANDUIT SNS1.5_C)	X
		1	N/A	11	WIRING DUCT COVER 1.5" (PANDUIT C1.5LG6)	X
		1	N/A	10	WIRING DUCT 1.5"W X 4"D (PANDUIT E1.5X4LG6)	X
		1	N/A	9	NAIC I/O PANEL	94028183
		1	N/A	8	6U VME CHASSIS	94028271
		AR	PANELS	7	10-32 x 1/2" BINDING HEAD MACHINE SCREWS	T-32276
		1	N/A	6	10U x 19" BLANK PANEL (PREMIER METAL ARP-1419-5533)	X
		2	N/A	5	6U x 19" BLANK PANEL (PREMIER METAL ARP-1019-5533)	X
		1	N/A	4	5U x 19" BLANK PANEL (PREMIER METAL ARP-819-5533)	X
		1	N/A	3	RHIC RING LOSS MONITOR PATCH PANEL	X
		2	N/A	2	1U x 19" BLANK PANEL (PREMIER METAL ARP-119-5533)	X
		1	N/A	1	19" RACK, 70"H RACK SPACE	X

QTY REQD

INTERPRET IN GENERAL ACCORDANCE WITH ASME Y14.24M-1989

UNLESS OTHERWISE SPECIFIED DIMENSIONS ARE IN INCHES

DECIMAL TOLERANCES
.X ±.030
.XX ±.015
.XXX ±.005
ANGULAR TOLERANCE ± .5°

NA FINISH

BREAK SHARP EDGES
MAX. XX MIN. XX

OUTSTANDING ECN

Q.A. CATEGORY A-3

		DATE
DRAWN BY	Jason Ortiz	11/3/00
CHECKED BY		
DESIGN APPROVAL		
ENGINEER APPROVAL	R. MICHNOFF	
SURVEY APPROVAL		

NEXT ASSEMBLY

BROOKHAVEN NATIONAL LABORATORY
UPTON, N.Y. 11973
C-A CONTROLS
Bldg. 911B, AGS Beam Inhibit System
Rack 5481

SIZE D | DRAWING NUMBER D09-E2747 | REV. A

MATERIAL: ——— | SCALE: NA | WEIGHT: - | SHEET 1 OF 1

1 *AUTOCAD

REV.	ZONE	ECN NO.	DATE	BY	CKR	APP.

Schoenfeld, Controls 10/5/2004 8:43 AM D09-E2748.dwg

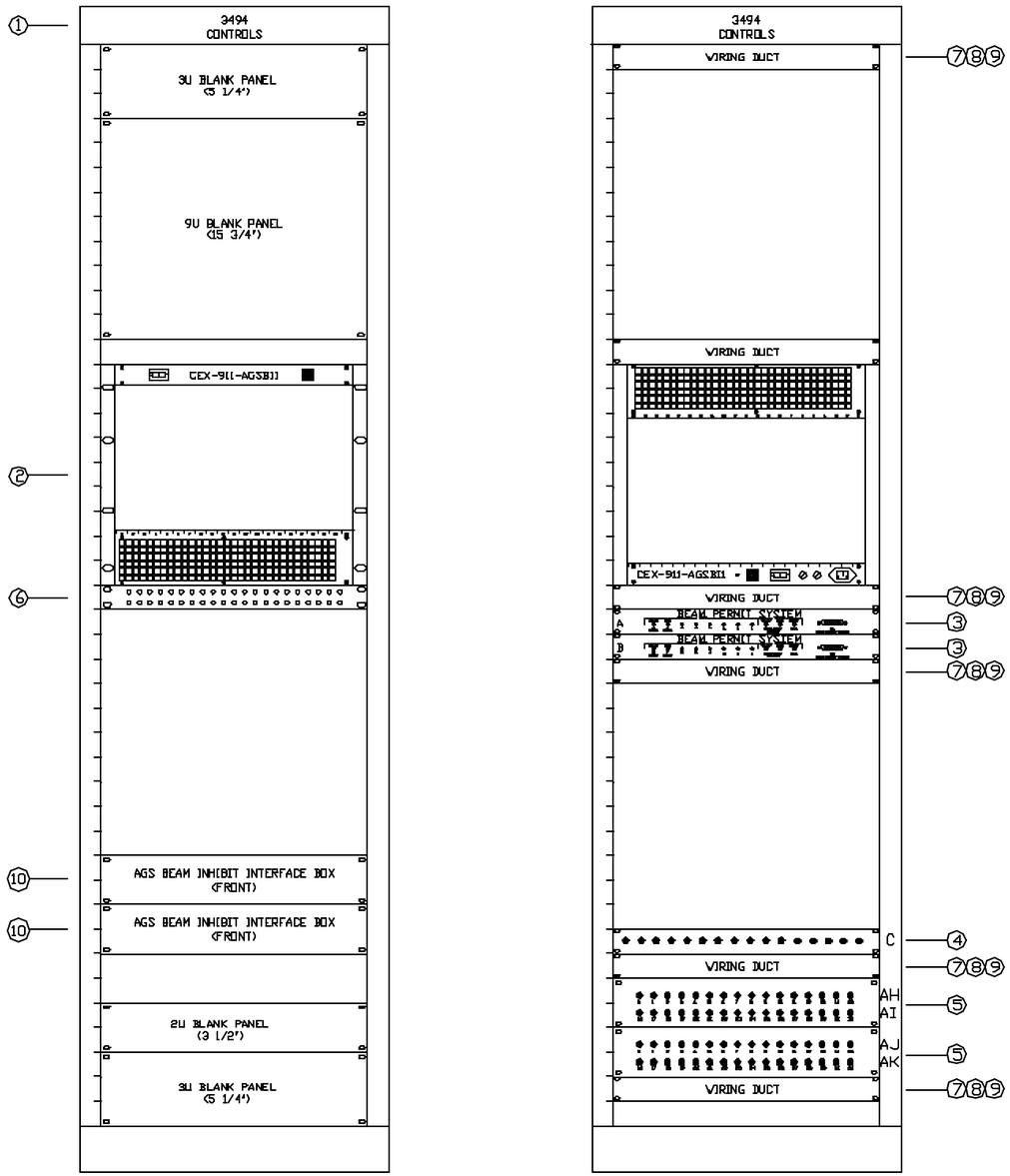

ITEM NO.	REF DESIGNATION	QTY REQD	DESCRIPTION	MANF. PART NO./INS. NO.
X	X	X	X	X
X	X	X	X	X
2	N/A	10	AGS BEAM INHIBIT INTERFACE BOX	
10	N/A	9	WIRING DUCT SNAP CLIPS 1.5W (PANDUIT SNS1.5-C)	X
5	N/A	8	WIRING DUCT COVER 1.5' (PANDUIT CL5LG6)	X
5	N/A	7	WIRING DUCT 1.5W X 4"D (PANDUIT ELSX4LG6)	X
1	N/A	6	GROMMET PANEL	X
2	N/A	5	BNC PATCH PANEL	X
1	N/A	4	AGS BEAM INHIBIT INTERFACE PANEL	X
2	A,B	3	BEAM PERMIT SYSTEM INTERFACE PANEL	94028215
1	N/A	2	VME CHASSIS CEX-911-AGSBI1	94028711
1	3494	1	19" RACK 77"H RACK SPACE	X

INTERPRET IN GENERAL ACCORDANCE WITH ASME Y14.24M-1989

UNLESS OTHERWISE SPECIFIED DIMENSIONS ARE IN INCHES

DECIMAL TOLERANCES
.X ±.030
.XX ±.015
.XXX ±.005
ANGULAR TOLERANCE ± .5°

NA FINISH

BREAK SHARP EDGES
MAX. XX MIN. XX

OUTSTANDING ECN

Q.A. CATEGORY A-3

		DATE
DRAWN BY	Jason Ortiz	11/3/02
CHECKED BY		
DESIGN APPROVAL		
ENGINEER APPROVAL	R. MICHNOFF	
SUPVR. APPROVAL		

NEXT ASSEMBLY

BROOKHAVEN NATIONAL LABORATORY
UPTON, N.Y. 11973
C-A CONTROLS
Bldg. 911B, AGS Beam Inhibit System
Rack 3494

SIZE D
D09-E2748
REV. A

MATERIAL: ——— SCALE: NA WEIGHT: - SHEET 1 OF 1

1 *AUTOCAD

Schoenfeld. Controls 10/7/2004 2:44 PM D09-E2749.dwg

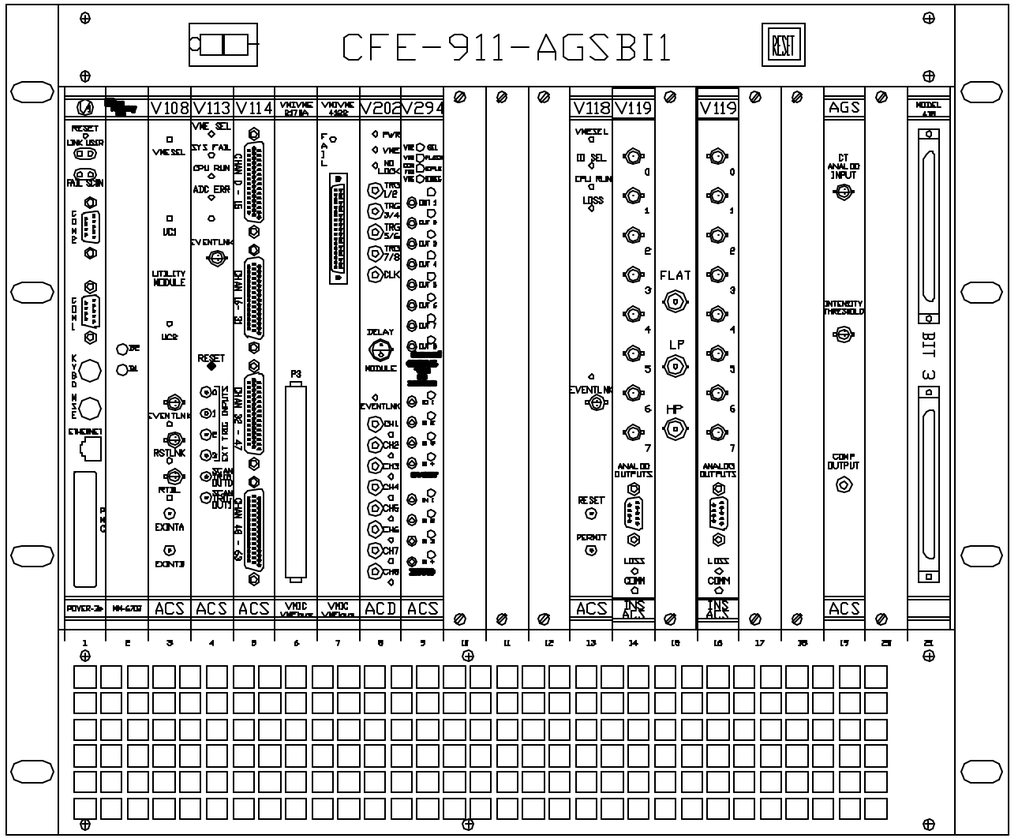

FRONT VIEW

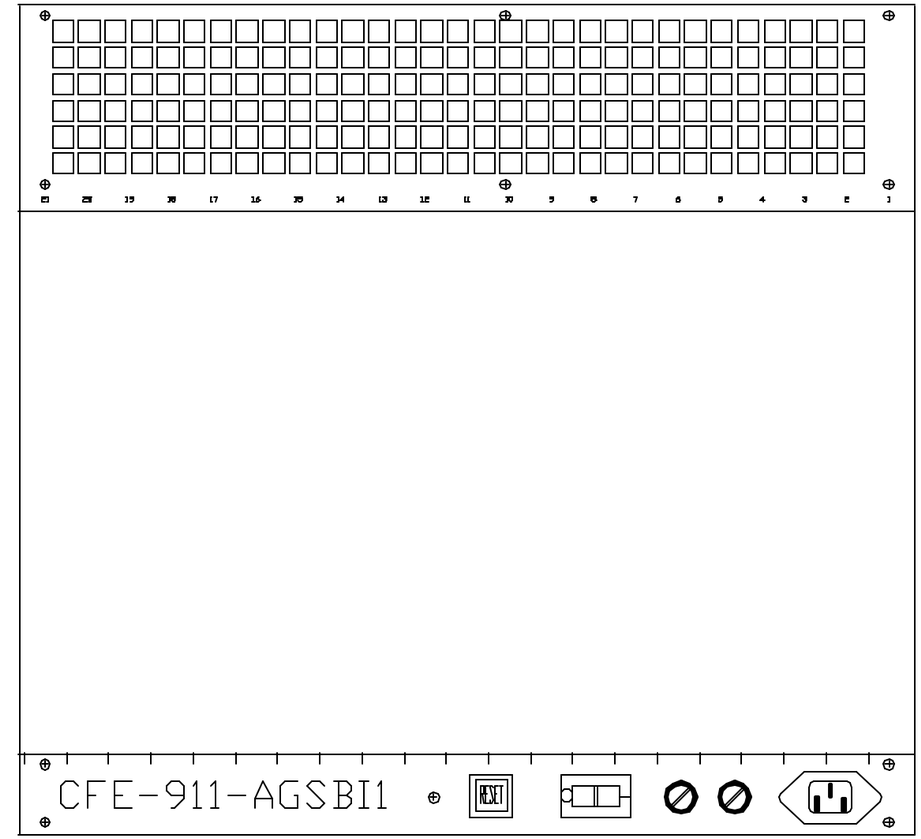

REAR VIEW

NOTE 1:

ALL UNUSED SLOTS REQUIRE BLANK PANELS.

		8	SEE NOTE 1	16	VME BLANK PANEL (ELECTRO-SPACE ESFE-2985)	
		1	SLOT 21	11	BIT 3 BUS EXTENDER	MODEL 418
		1	SLOT 19	11	AGS BEAM EXTRACTION INTENSITY MODULE	
		1	SLOT 16	11	V119 BLN ANALOG OUTPUT MODULE	93031020
		1	SLOT 15	11	INTERFACE PANEL	
		1	SLOT 14	10	V119 BLN ANALOG OUTPUT MODULE	93031020
		1	SLOT 13	9	V118 BLN MICRO-CONTROLLER	94028232
		1	SLOT 9	10	V294 GENERAL I/O MODULE	
		1	SLOT 8	9	V202 EVENT DELAY MODULE	
		1	SLOT 7	8	DAC MODULE 4122, 8-CHAN, 12-BIT	VMIVME 4122-010
		1	SLOT 6	7	32 CHAN DIGITAL OUTPUT MODULE, HIGH CURRENT OUTPUT (300mA)	VMIVME 2170A-200
		1	SLOT 5	6	V114 NATIC A/D CONVERTER MODULE	94028226
		1	SLOT 4	5	V113 NATIC CONTROLLER MODULE	94028140
		1	SLOT 3	4	V108 UTILITY MODULE	94028094
		1	SLOT 2	3	MEMORY BOARD	MM-6702
		1	SLOT 1	2	FRONT END COMPUTER	MOTOROLA
		1	N/A	1	VME CHASSIS (with RHIC BLN Modification)	RHIC-93008000
-3	-2	-1	REF DESIGNATOR	ITEM NO.	DESCRIPTION	MAT'L DWG NO.&NO.
QTY REQD						

INTERPRET IN GENERAL ACCORDANCE WITH ASME Y14.24M-1989	Q.A. CATEGORY A-3	DATE	BROOKHAVEN NATIONAL LABORATORY
	DRAWN BY Jason Ortiz	11/3/00	UPTON, N.Y. 11973
UNLESS OTHERWISE SPECIFIED DIMENSIONS ARE IN INCHES	CHECKED BY		RHIC CONTROLS
DECIMAL TOLERANCES .X ±.030 .XX ±.015 .XXX ±.005 ANGULAR TOLERANCE ± 5°	DESIGN APPROVAL		AGS BEAM INHIBIT SYSTEM, BLDG 911B
	ENGINEER APPROVAL		VME CHASSIS CFE-911-AGSBI1
	SUPVR. APPROVAL		SIZE D — D09-E2749 — REV. A
OUTSTANDING ECN	NA / FINISH	BREAK SHARP EDGES MAX. XX MIN. XX	NEXT ASSEMBLY
			MATERIAL: — SCALE: NA — WEIGHT: — SHEET 1 of 1

*AUTOCAD

Schoenfeld, Controls 10/13/2004 10:00 AM D09-E2750.dwg

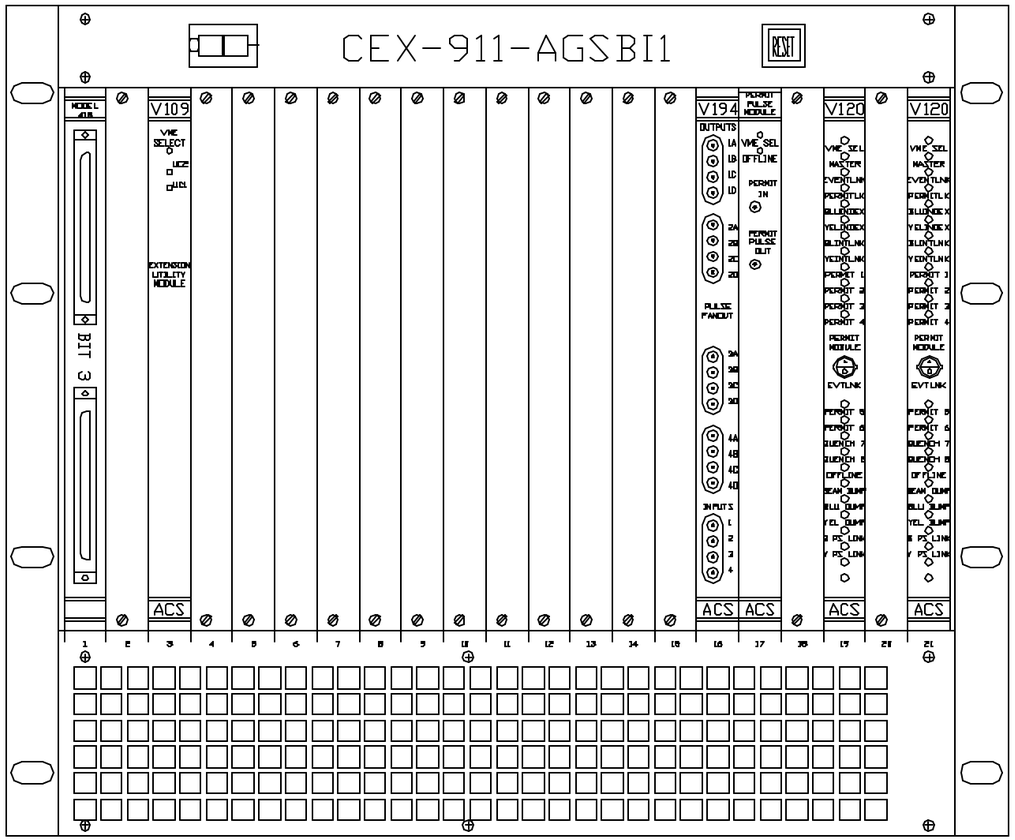

FRONT VIEW

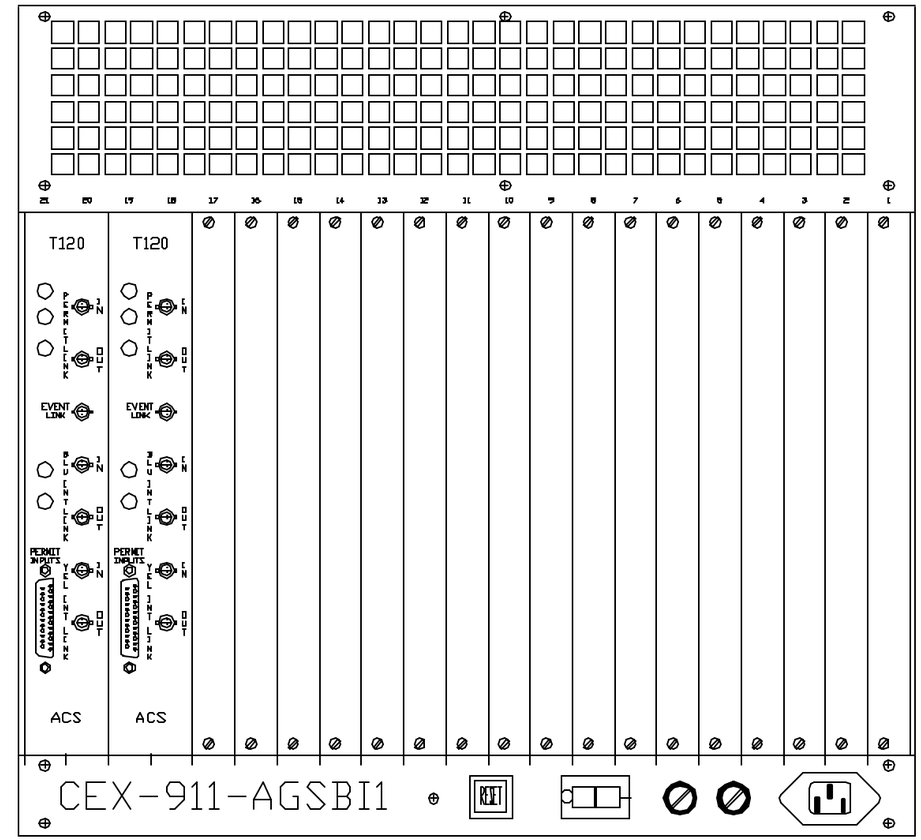

REAR VIEW

NOTE 1:

ALL UNUSED SLOTS REQUIRE BLANK PANELS.

QTY REQD -3	QTY REQD -2	QTY REQD -1	REF DESIGNATOR	ITEM NO.	DESCRIPTION	MAT'L DWG NO./INT. NO.
		J2	A/R	8	VME BLANK PANEL (ELECTRO-SPACE ES FE-29852)	XX
		1	SLOT 17	7	PERMIT PULSE MODULE	94028872
		2	SLOT 19 & 21	6	T120 PERMIT SYSTEM TRANSITION MODULE	94028077
		2	SLOT 19 & 21	5	V120 PERMIT SYSTEM MODULE	94028072
		1	SLOT 16	4	V194 PULSE FANOUT MODULE	94028196
		1	SLOT 2	3	V109 UTILITY MODULE	94028152
		1	SLOT 1	2	BIT 3 BUS EXTENDER	MODEL 418
		1	N/A	1	VME CHASSIS (with RHIC BLM Modification)	RHIC-93008000

INTERPRET IN GENERAL ACCORDANCE WITH ASME Y14.24M-1989

UNLESS OTHERWISE SPECIFIED DIMENSIONS ARE IN INCHES

DECIMAL TOLERANCES
.X ±.030
.XX ±.015
.XXX ±.005
ANGULAR TOLERANCE ± 5°

OUTSTANDING ECN

NA FINISH

BREAK SHARP EDGES MAX. XX MIN. XX

Q.A. CATEGORY A-3

		DATE
DRAWN BY	Jason Ortiz	11/3/00
CHECKED BY		
DESIGN APPROVAL		
ENGINEER APPROVAL		
SUPVR. APPROVAL		

NEXT ASSEMBLY

BROOKHAVEN NATIONAL LABORATORY
UPTON, N.Y. 11973
RHIC CONTROLS
AGS BEAM INHIBIT SYSTEM, BLDG 911B
VME CHASSIS CEX-911-AGSBI1

SIZE D — DRAWING NUMBER D09-E2750 — REV. A

MATERIAL: SCALE: NA WEIGHT: SHEET 1 of 1

*AUTOCAD

Schoenfeld, Controls 10/5/2004 8:44 AM D09-E2751-1.dwg

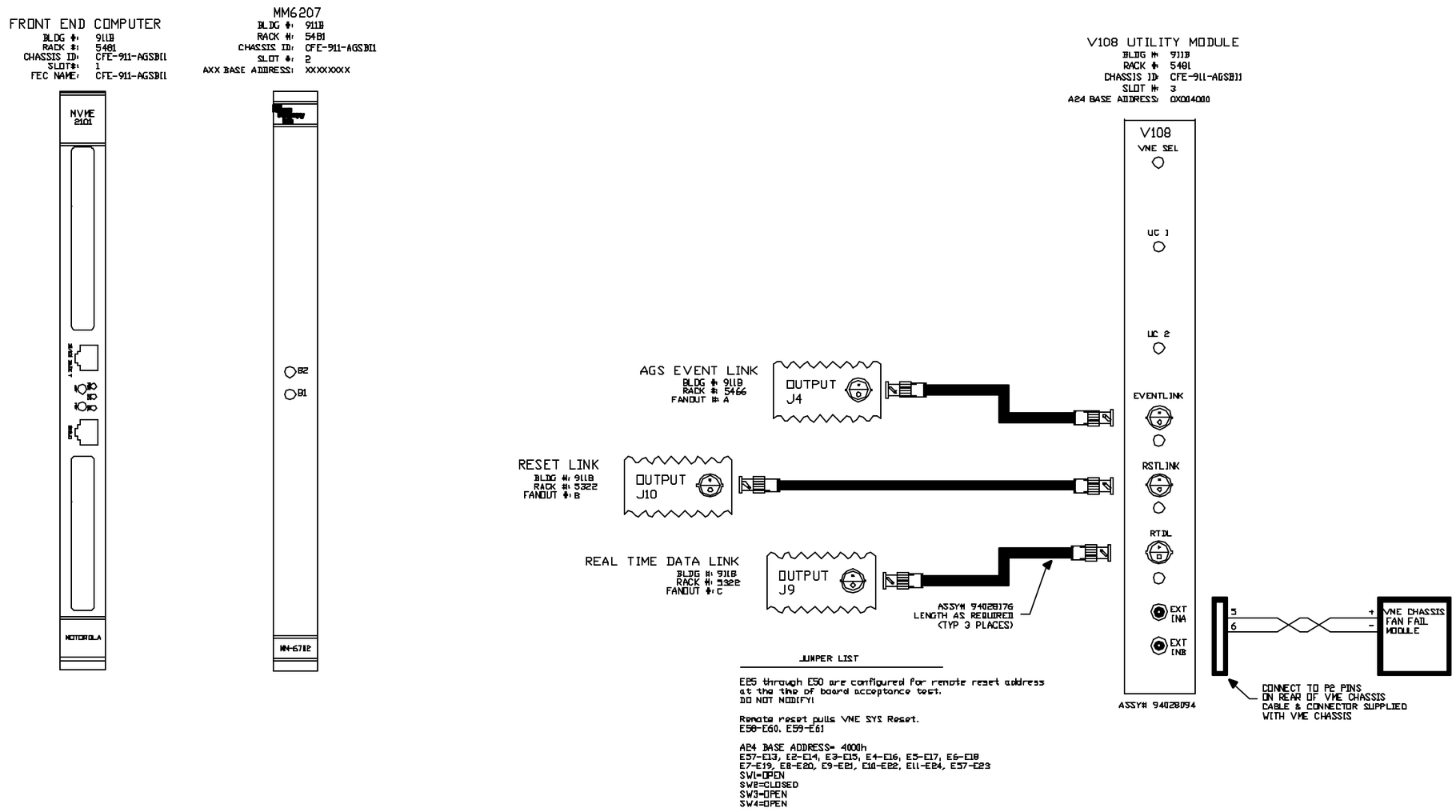

JUMPER LIST

E85 through E50 are configured for remote reset address at the time of board acceptance test.
DO NOT MODIFY!

Remote reset pulls VME SYS Reset.
E58-E60, E59-E61

A24 BASE ADDRESS= 4000h
E57-E13, E2-E14, E3-E15, E4-E16, E5-E17, E6-E18
E7-E19, E8-E20, E9-E21, E10-E22, E11-E24, E57-E23
SW1=OPEN
SW2=CLOSED
SW3=OPEN
SW4=OPEN

-3 -2 -1 QTY REQD	REV DESIGNATOR	ITEM NO.	DESCRIPTION		MATL DWG NO./INV NO.
	INTERPRET IN GENERAL ACCORDANCE WITH ASME Y14.24M-1989	Q.A. CATEGORY A-3	DATE	BROOKHAVEN NATIONAL LABORATORY UPTON, N.Y. 11973	
	UNLESS OTHERWISE SPECIFIED DIMENSIONS ARE IN INCHES	DRAWN BY JASON ORTIZ	11/3/00	C-A CONTROLS	
	DECIMAL TOLERANCES .X ±.030 .XX ±.015 .XXX ±.005 ANGULAR TOLERANCE ± .5°	CHECKED BY		SERVICE BLDG. 911 AGS BEAM INHIBIT	
		DESIGN APPROVAL		FT END COMP/V108 UTIL MODULE	
		ENGINEER APPROVAL			
		SUPVR. APPROVAL		SIZE D	D09-D2751 REV. A
OUTSTANDING ECN	NA FINISH	BREAK SHARP EDGES MAX. XX MIN. XX	NEXT ASSEMBLY	DRAWING NUMBER	
				MATERIAL:	SCALE: NA WEIGHT: SHEET 1

*AUTOCAD

Schoenfeld, Controls 10/13/2004 9:51 AM D09-E2751-2.dwg

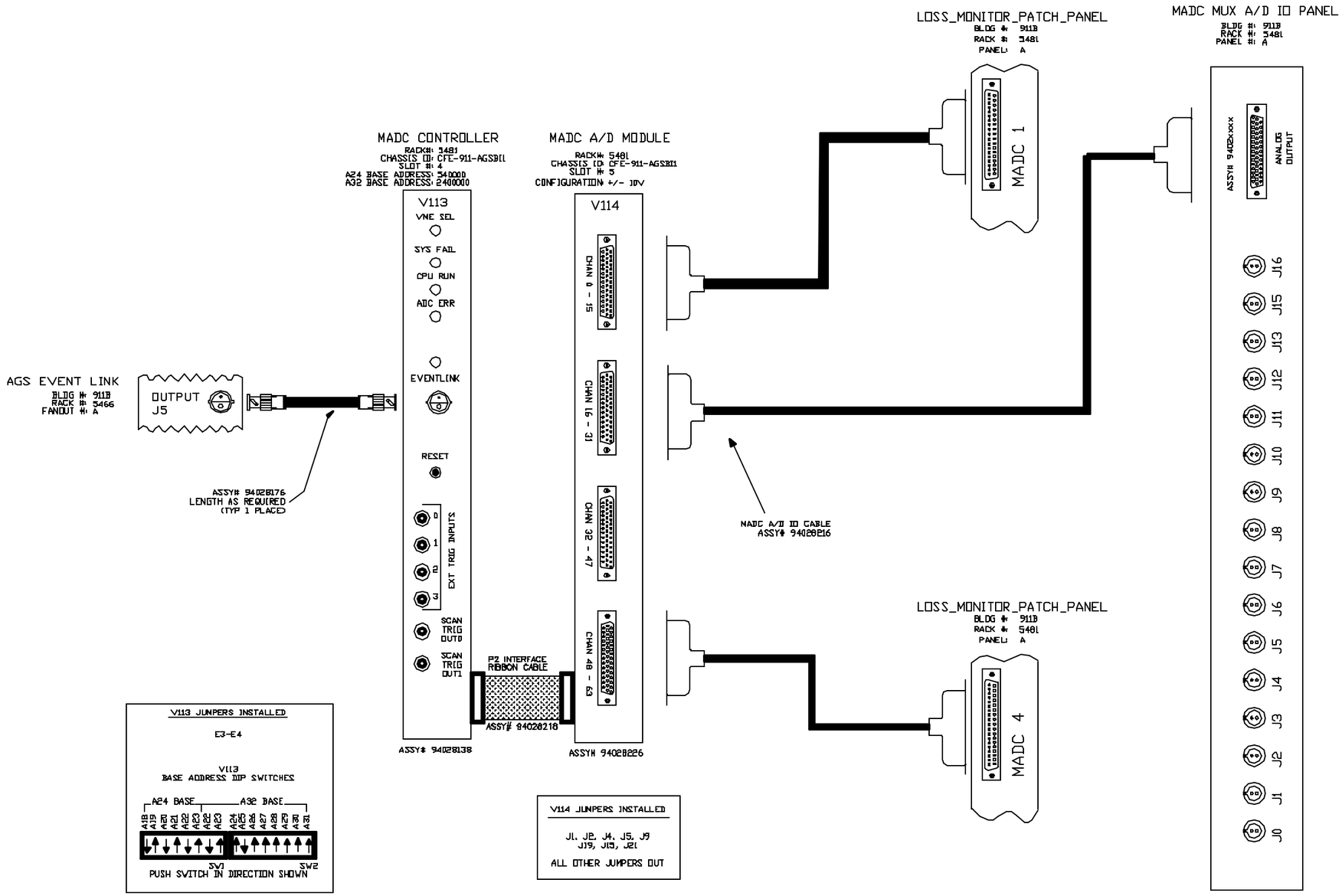

V113 JUMPERS INSTALLED

E3-E4

V113
BASE ADDRESS DIP SWITCHES

A24 BASE — A32 BASE

A18 A19 A20 A21 A22 A23 A24 A25 A26 A27 A28 A29 A30 A31

SW1 SW2

PUSH SWITCH IN DIRECTION SHOWN

V114 JUMPERS INSTALLED

J1, J2, J4, J5, J9
J19, J13, J21

ALL OTHER JUMPERS OUT

REV.	ZONE	ECN NO.	DATE	BY	CKR	APP.

-3	-2	-1	REF DESIGNATION	ITEM NO.	DESCRIPTION	MAT'L DWG NO./INT. NO.
QTY REQD						

INTERPRET IN GENERAL ACCORDANCE WITH ASME Y14.24M-1989

UNLESS OTHERWISE SPECIFIED DIMENSIONS ARE IN INCHES

DECIMAL TOLERANCES
.X ±.030
.XX ±.015
.XXX ±.005
ANGULAR TOLERANCE ±.5°

OUTSTANDING ECN: NA

FINISH: NA

BREAK SHARP EDGES MAX. XX MIN. XX

Q.A. CATEGORY A-3

		DATE
DRAWN BY	Jason Ortiz	11/3/00
CHECKED BY		
DESIGN APPROVAL		
ENGINEER APPROVAL		
SUPVR. APPROVAL		

NEXT ASSEMBLY

BROOKHAVEN NATIONAL LABORATORY
UPTON, N.Y. 11973

C-A CONTROLS

SERVICE BLDG. 911 BEAM INHIBIT SYSTEM

MADC SYSTEM

SIZE D — D09-E2751 — REV. A

DRAWING NUMBER

MATERIAL: SCALE: NA WEIGHT: SHEET 2

1 *AUTOCAD

Schoenfeld, Controls 10/13/2004 9:52 AM D09-E2751-3.dwg

REV.	ZONE	ECN NO.	DATE	BY	CKR	APP.

DIGITAL OUTPUT MODULE (LOW CURRENT)
VMIVME 2170A

BLDG #: 911B
RACK #: 5481
CHASSIS ID: CFE-911-AGSBI1
SLOT #: 6
A16 BASE ADDRESS: 0xE100

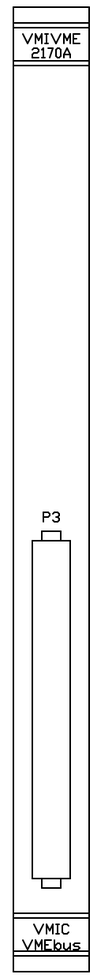

RHIC RING LOSS MONITOR

RIBBON CABLE

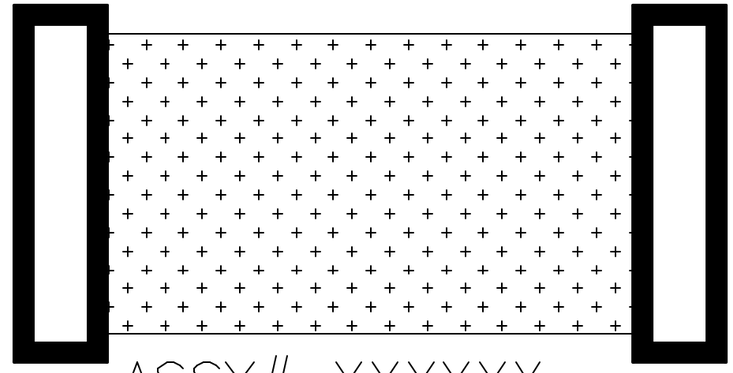

ASSY# XXXXXX

PATCH PANEL

BLDG # 911B
RACK # 5481
PANEL # A

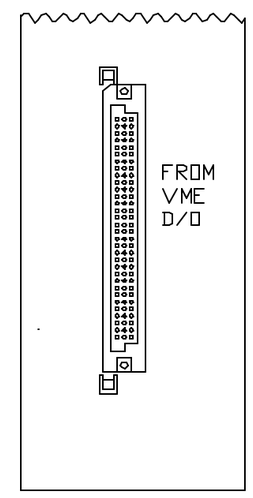

JUMPER SETTINGS
A2:IN
A3:IN
A4:IN
A5:IN
A6:IN
A7:IN
A8:OUT
A9:IN
A10:IN
A11:IN
A12:IN
A13:OUT
A14:OUT
A15:OUT

-3	-2	-1	REV DESIGNATION	ECN NO.	DESCRIPTION	MAT'L DWG NO./ENG. NO.
QTY REQD						

INTERPRET IN GENERAL ACCORDANCE WITH ASME Y14.24M-1989	Q.A. CATEGORY A-3		BROOKHAVEN NATIONAL LABORATORY UPTON, N.Y. 11973
UNLESS OTHERWISE SPECIFIED DIMENSIONS ARE IN INCHES	DRAWN BY: Jason Ortiz	DATE: 11/2/00	C-A CONTROLS
DECIMAL TOLERANCES .X ±.030 .XX ±.015 .XXX ±.005 ANGULAR TOLERANCE ± .5°	CHECKED BY		911B,VME CHASSIS CFE-911-AGSBI1
	DESIGN APPROVAL		DIGITAL OUTPUTS
	ENGINEER APPROVAL: R. MICHNOFF		
	SUPVR. APPROVAL		SIZE: D — DRAWING NUMBER: D09-E2751 — REV.: A
NA FINISH	BREAK SHARP EDGES MAX. XX MIN. XX	NEXT ASSEMBLY	MATERIAL: —— SCALE: NA WEIGHT: – SHEET 3
OUTSTANDING ECN			

1 *AUTOCAD

REV.	ZONE	ECN NO.	DATE	BY	CKR	APP.

VMIVME 4122 (8 CHAN., 12 BIT ANALOG OUTPUT MODULE)

Schoenfeld, Controls 10/13/2004 9:53 AM D09-E2751-4.dwg

BLDG #: 911B
RACK #: 5481
CHASSIS ID: CFE-911-AGSBI1
SLOT #: 7
A16 BASE ADDRESS: 0x0200
CONFIGURATION: 0 TO +10 VOLTS

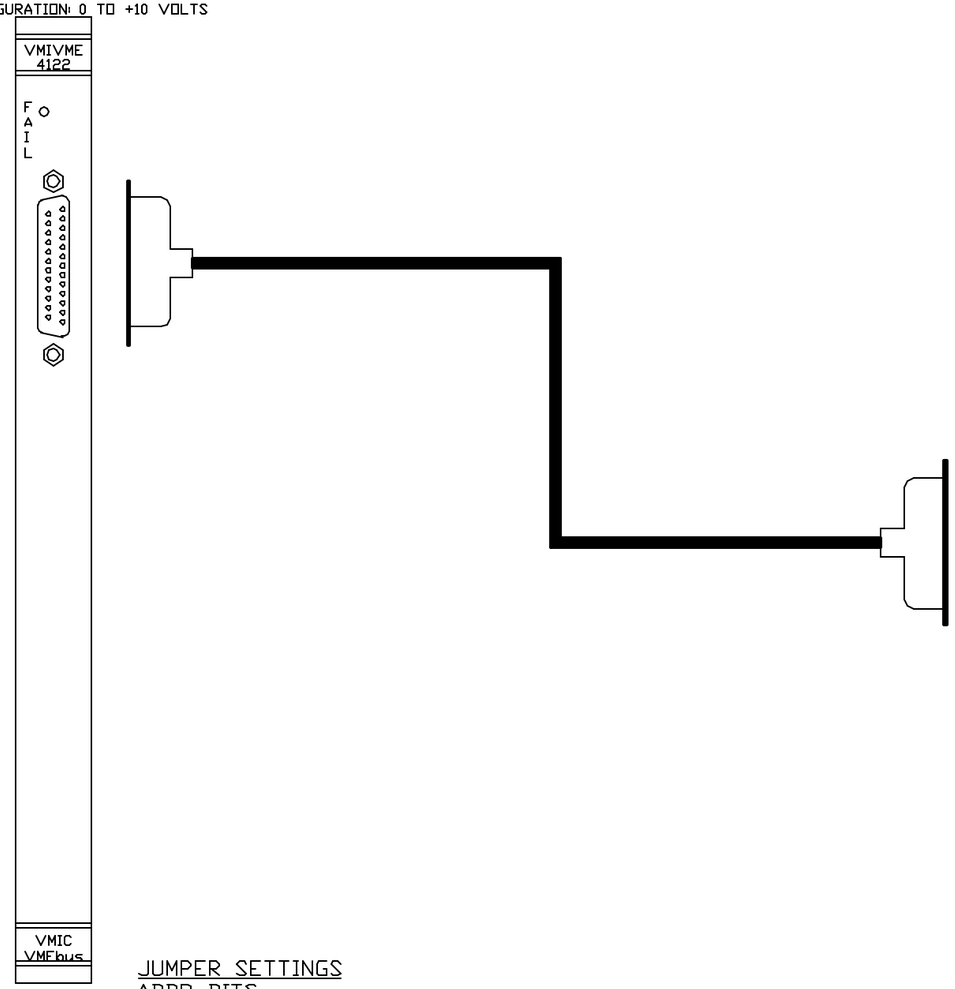

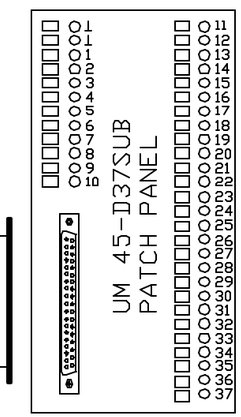

JUMPER SETTINGS

ADDR BITS	0 TO +10V
E11 (A7):IN	E1:2-3
E12 (A8):IN	E3:1-2
E13 (A9):OUT	E4:OUT
E14 (A10):IN	E5:OUT
E15 (A11):IN	E6:1-2
E16 (A12):IN	E7:1-2
E17 (A13):IN	E8:2-3
E18 (A14):IN	E9:OUT
E19 (A15):IN	E10:OUT

NOTE: PIN 1 OF JUMPERS IS DESIGNATED BY A SQUARE PAD ON THE SOLDER SIDE OF THE BOARD

-3	-4	-7	REF DESIGNATION	ITEM NO.	DESCRIPTION	MFG. DWG NO.&NO.
QTY REQD						

INTERPRET IN GENERAL ACCORDANCE WITH ASME Y14.24M-1989
UNLESS OTHERWISE SPECIFIED DIMENSIONS ARE IN INCHES
DECIMAL TOLERANCES .X ±.030 .XX ±.015 .XXX ±.005
ANGULAR TOLERANCE ± .5°
NA FINISH
BREAK SHARP EDGES
MAX. XX MIN. XX
OUTSTANDING ECN

Q.A. CATEGORY A-3

		DATE
DRAWN BY	Jason Ortiz	11/2/00
CHECKED BY		
DESIGN APPROVAL		
ENGINEER APPROVAL	R. MICHNOFF	
SUPVR. APPROVAL		

NEXT ASSEMBLY

BROOKHAVEN NATIONAL LABORATORY
UPTON, N.Y. 11973
C-A CONTROLS
911B, VME CHASSIS CFE-911-AGSBI1
ANALOG OUTPUTS

SIZE D | DRAWING NUMBER D09-E2751 | REV. A

MATERIAL: ——— SCALE: NA WEIGHT: - SHEET 4

1 *AUTOCAD

Schoenfeld, Controls 10/7/2004 10:24 AM D09-E2751-5.dwg

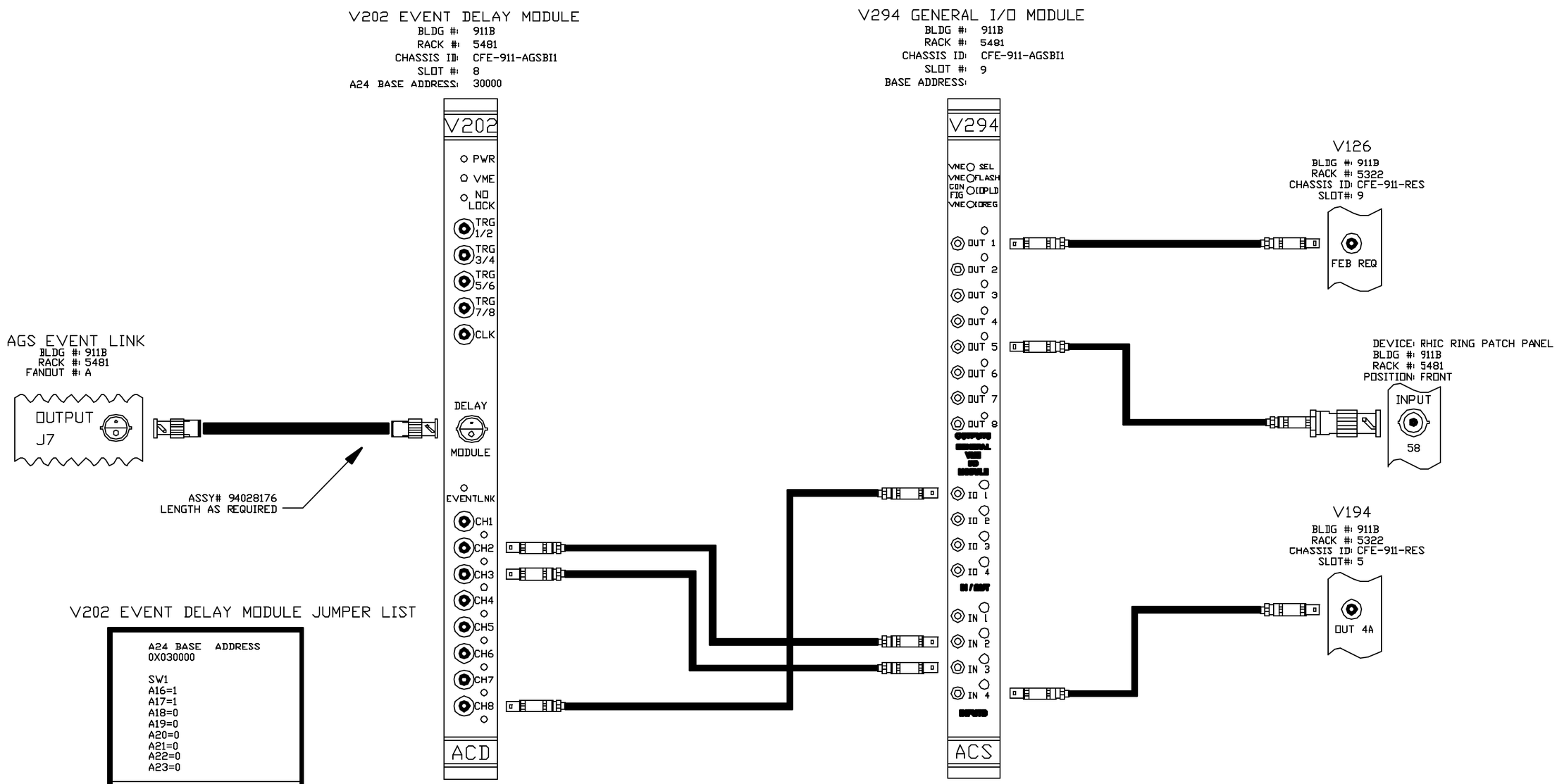

V202 EVENT DELAY MODULE JUMPER LIST

A24 BASE ADDRESS
0X030000

SW1
A16=1
A17=1
A18=0
A19=0
A20=0
A21=0
A22=0
A23=0

JP1=IN
JP2=PIN 1 TO 2
JP3=IN
JP4=OUT
JP5=OUT
JP6=OUT
JP7=OUT
JP8=OUT
JP9=OUT
JP10=IN
JP11,12,13=IN

REV.	ZONE	ECN NO.	DATE	BY	CKD	APP.

INTERPRET IN GENERAL ACCORDANCE WITH ASME Y14.24M-1989	Q.A. CATEGORY A-3	DATE	BROOKHAVEN NATIONAL LABORATORY UPTON, N.Y. 11973	
UNLESS OTHERWISE SPECIFIED DIMENSIONS ARE IN INCHES	DRAWN BY Schoenfeld	10/6/04	CONTROLS WIRING DIAGRAM	
DECIMAL TOLERANCES .X ±.030 .XX ±.015 .XXX ±.005 ANGULAR TOLERANCE ± .5°	CHECK ED. BY		BLDG. 911B CHASSIS CFE-911-AGSBI1	
	DESIGN APPROVAL		V202 AND V294 MODULES	
	ENGINEER APPROVAL			
	SUPVR. APPROVAL		SIZE D — D09-E2751-5 — REV. A	
NA FINISH	BREAK SHARP EDGES MAX. XX MIN. XX	NEXT ASSEMBLY	DRAWING NUMBER	
OUTSTANDING ECN			MATERIAL: — SCALE: FULL WEIGHT: - SHEET 5	

*AUTOCAD

REV.	ZONE	ECN NO.	DATE	BY	CKR	APP.

Schoenfeld, Controls 10/7/2004 10:34 AM D09-E2751-6.dwg

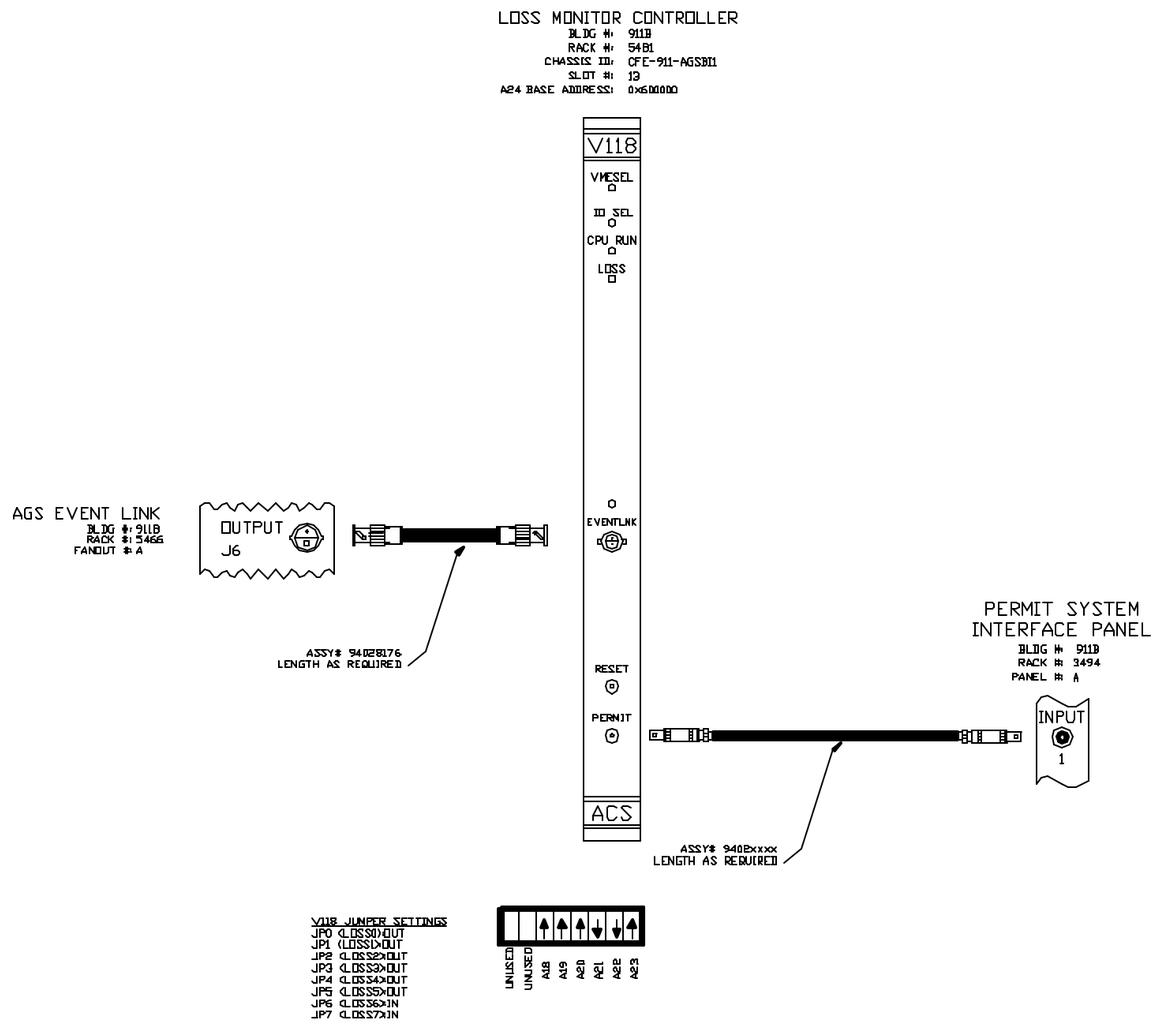

-3	-2	-1	REF DESIGNATION	FGM NO.	DESCRIPTION	MFG. DWG NO.&NO.
QTY REQD						

INTERPRET IN GENERAL ACCORDANCE WITH ASME Y14.24M-1989	Q.A. CATEGORY A-3	DATE	BROOKHAVEN NATIONAL LABORATORY UPTON, N.Y. 11973
	DRAWN BY Jason Ortiz	11/3/00	
UNLESS OTHERWISE SPECIFIED DIMENSIONS ARE IN INCHES	CHECKED BY		C-A CONTROLS
DECIMAL TOLERANCES .X ± .030 .XX ± .015 .XXX ± .005 ANGULAR TOLERANCE ± .5°	DESIGN APPROVAL		BLDG. 911B, VME CHASSIS CFE-911-AGSBI1
	ENGINEER APPROVAL R. MICHNOFF		BLM CONTROLLER MODULE
	SUPVR. APPROVAL		SIZE D — D09-E2751 (DRAWING NUMBER) — REV. A
NA FINISH	BREAK SHARP EDGES MAX. XX MIN. XX	NEXT ASSEMBLY	
OUTSTANDING ECN			MATERIAL: ——— SCALE: FULL WEIGHT: - SHEET 6

1 *AUTOCAD

Schoenfeld, Controls 10/7/2004 1:42 PM D09-E2751-7.dwg

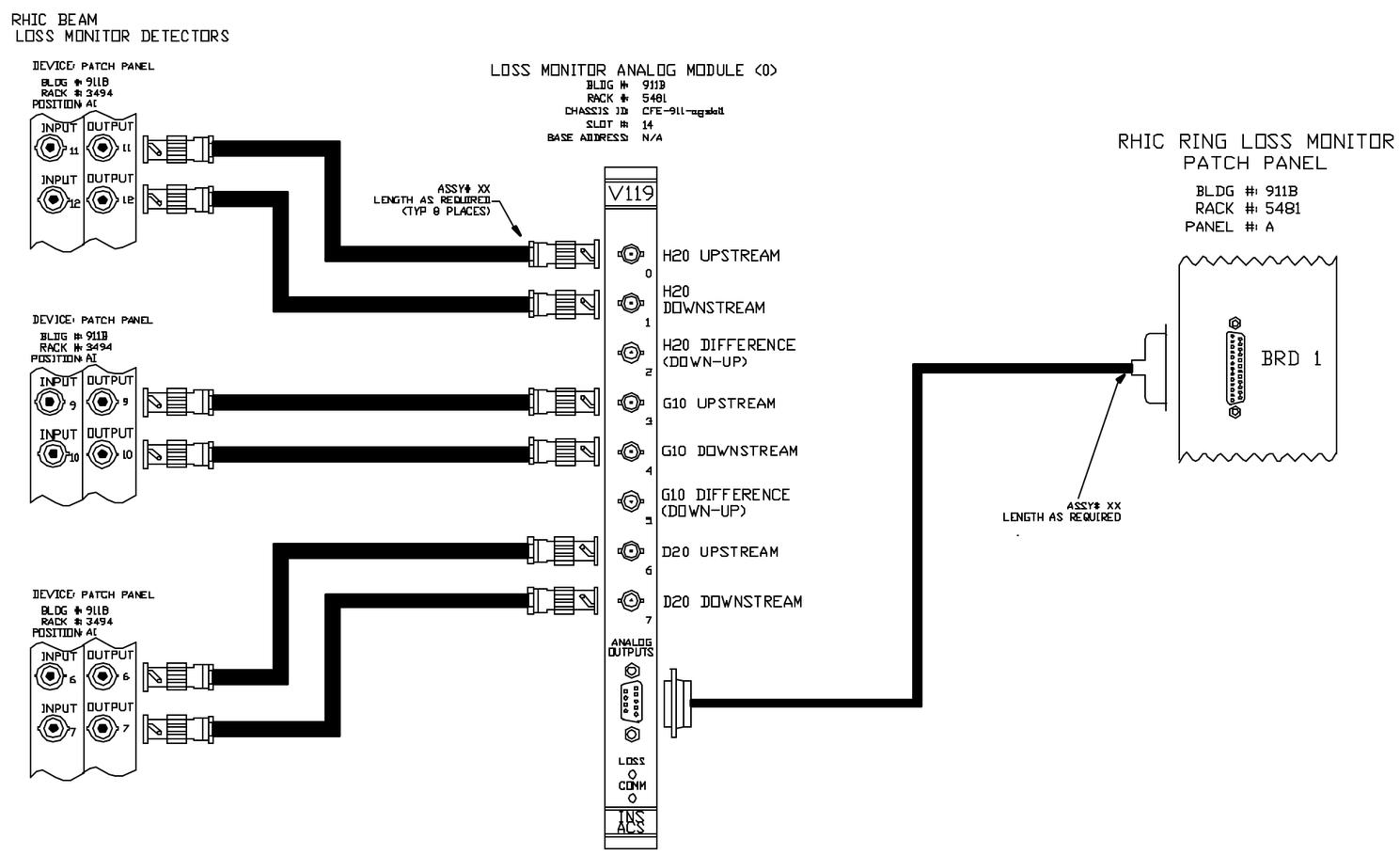

V119 JUMPER SETTINGS

JP10 (ADDR5)IN	E1-E2	JP21OUT
JP9 (ADDR6)IN	JP12OUT	JP22IN
JP8 (ADDR7)IN	JP11IN	JP23OUT
JP0 (LOSS0)IN	JP14OUT	JP24IN
JP1 (LOSS1)OUT	JP13IN	JP25OUT
JP2 (LOSS2)OUT	JP15OUT	JP26IN
JP3 (LOSS3)OUT	JP16IN	
JP4 (LOSS4)OUT	JP17OUT	
JP5 (LOSS5)OUT	JP18IN	
JP6 (LOSS6)OUT	JP20OUT	
JP7 (LOSS7)OUT	JP19IN	

REV.	ZONE	ECN NO.	DATE	BY	CKR	APP.

-3	-2	-1	REF DESIGNATOR	ECN NO.	DESCRIPTION	MFG. DPS NOLINK NO.
QTY REQD						

INTERPRET IN GENERAL ACCORDANCE WITH ASME Y14.24M-1989

UNLESS OTHERWISE SPECIFIED DIMENSIONS ARE IN INCHES

DECIMAL TOLERANCES
.X ±.030
.XX ±.015
.XXX ±.005
ANGULAR TOLERANCE ± .5°

NA FINISH

BREAK SHARP EDGES MAX. XX MIN. XX

OUTSTANDING ECN

Q.A. CATEGORY A-3

		DATE
DRAWN BY	Jason Ortiz	11/3/03
CHECKED BY		
DESIGN APPROVAL		
ENGINEER APPROVAL	R. MICHNOFF	
SUPVR. APPROVAL		

NEXT ASSEMBLY

BROOKHAVEN NATIONAL LABORATORY
ASSOCIATED UNIVERSITIES, INC.
UPTON, N.Y. 11973

C-A CONTROLS

BLDG. 911B, VME CHASSIS CFE-911-AGSBI1

BLM ANALOG MODULE

SIZE D

DRAWING NUMBER D09-E2751

REV. A

MATERIAL: ——— SCALE: FULL WEIGHT: - SHEET 7

*AUTOCAD

Schoenfeld, Controls 10/13/2004 9:12 AM D09-E2751-8.dwg

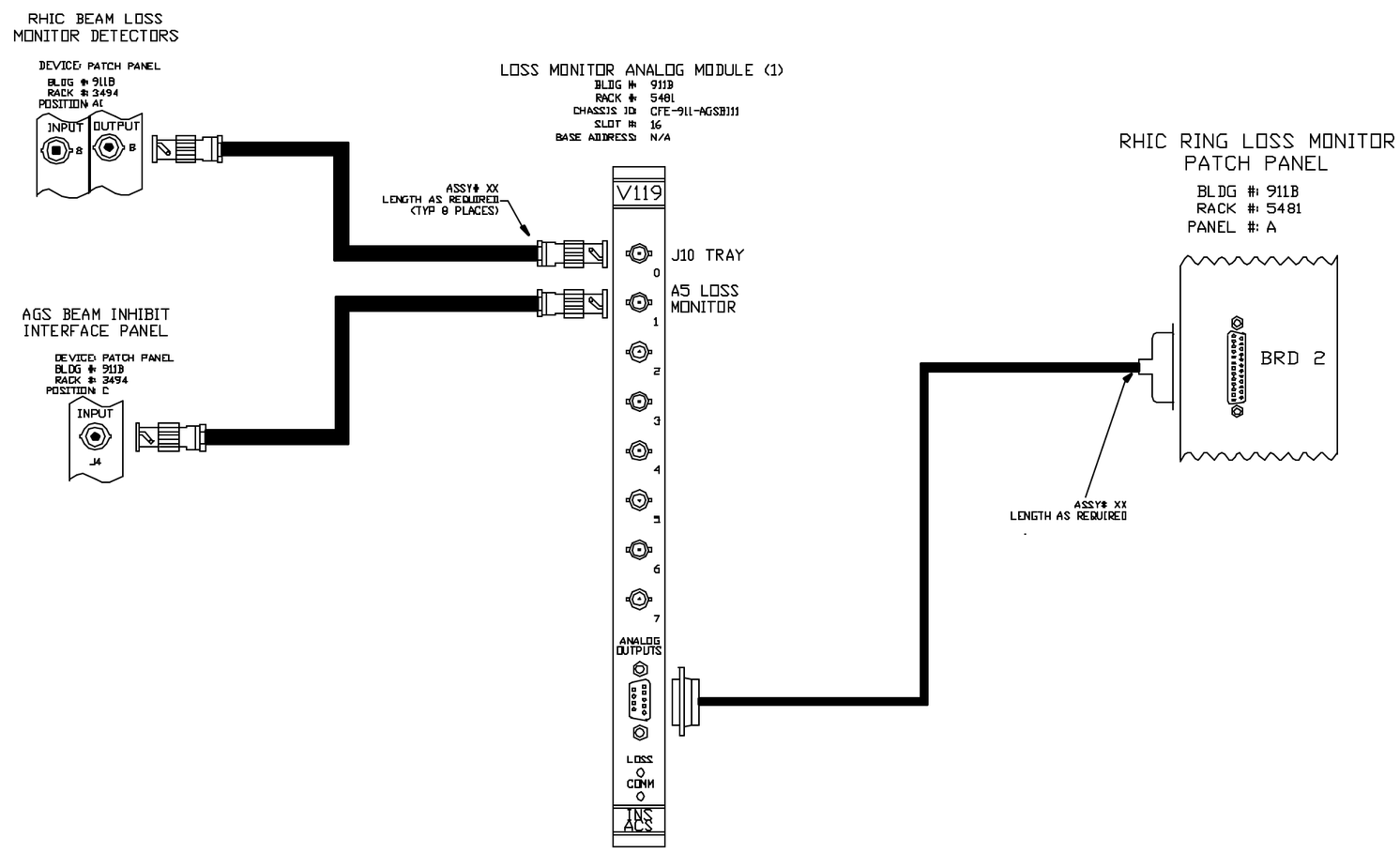

V119 JUMPER SETTINGS

JP10 (ADDR5): IN	E1-E2	JP21: OUT
JP9 (ADDR6): IN	JP12: OUT	JP22: IN
JP8 (ADDR7): IN	JP11: IN	JP23: OUT
JP0 (LOSS0): IN	JP14: OUT	JP24: IN
JP1 (LOSS1): OUT	JP13: IN	JP25: OUT
JP2 (LOSS2): OUT	JP15: OUT	JP26: IN
JP3 (LOSS3): OUT	JP16: IN	
JP4 (LOSS4): OUT	JP17: OUT	
JP5 (LOSS5): OUT	JP18: IN	
JP6 (LOSS6): OUT	JP20: OUT	
JP7 (LOSS7): OUT	JP19: IN	

-3	-2	-1	REV DESIGNATOR	ECN NO.	DESCRIPTION	MAT'L DWG NO./ENG. NO.
QTY REQD						

INTERPRET IN GENERAL ACCORDANCE WITH ASME Y14.24M-1989

UNLESS OTHERWISE SPECIFIED DIMENSIONS ARE IN INCHES

DECIMAL TOLERANCES
.X ±.030
.XX ±.015
.XXX ±.005
ANGULAR TOLERANCE ± .5°

NA FINISH

BREAK SHARP EDGES
MAX. XX MIN. XX

OUTSTANDING ECN

Q.A. CATEGORY A-3

		DATE
DRAWN BY	Jason Ortiz	11/3/00
CHECKED BY		
DESIGN APPROVAL		
ENGINEER APPROVAL	R. MICHNOFF	
SUPVR. APPROVAL		

NEXT ASSEMBLY

BROOKHAVEN NATIONAL LABORATORY
ASSOCIATED UNIVERSITIES, INC.
UPTON, N.Y. 11973

C-A CONTROLS

BLDG. 911B, VME CHASSIS CFE-911-AGSB11

BLM ANALOG MODULE

SIZE D

D09-E2751

DRAWING NUMBER

REV. A

MATERIAL: ——— SCALE: FULL WEIGHT: - SHEET 8

1 *AUTOCAD

Schoenfeld, Controls 10/13/2004 11:57 AM D09-E2751-9.dwg

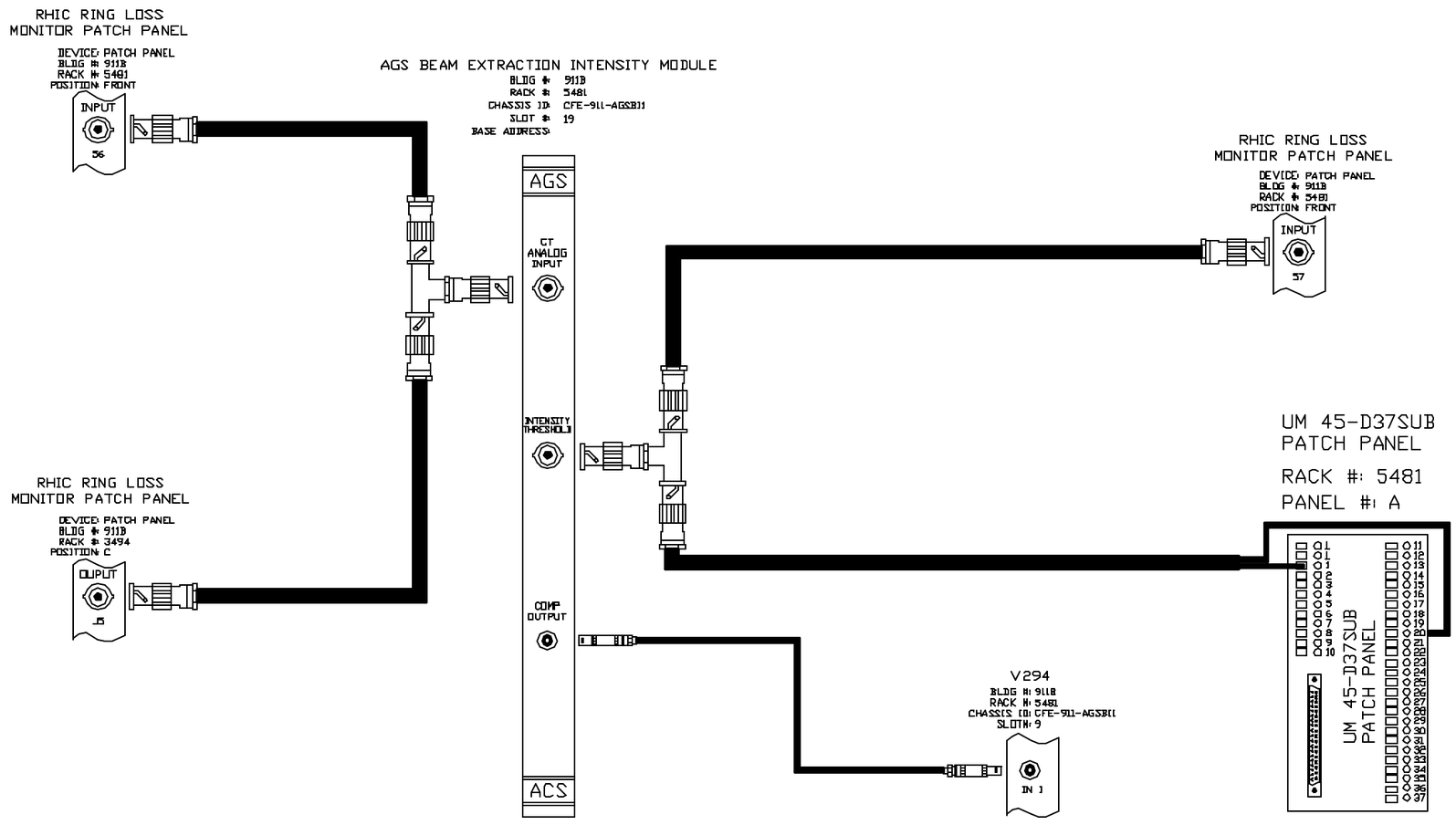

REV.	ZONE	ECN NO.	DATE	BY	CKR	APP.

INTERPRET IN GENERAL ACCORDANCE WITH ASME Y14.24M-1989	Q.A. CATEGORY A-3			BROOKHAVEN NATIONAL LABORATORY UPTON, N.Y. 11973
	DRAWN BY	JASON ORTIZ	11/3/00	
UNLESS OTHERWISE SPECIFIED DIMENSIONS ARE IN INCHES	CHECKED BY			C-A CONTROLS
DECIMAL TOLERANCES .X ±.030 .XX ±.015 .XXX ±.005 ANGULAR TOLERANCE ± .5°	DESIGN APPROVAL			AGS BEAM INHIBIT SYSTEM
	ENGINEER APPROVAL	R.MICHNOFF		BIT 3 MODULE
	SUPVR. APPROVAL			SIZE D — DO9-E2751 — REV. A
NA FINISH	BREAK SHARP EDGES MAX. XX MIN. XX	NEXT ASSEMBLY		DRAWING NUMBER
OUTSTANDING ECN				MATERIAL: — SCALE: FULL WEIGHT: - SHEET 9

*AUTOCAD

REV.	ZONE	ECN NO.	DATE	BY	CKR	APP.

DEVICE: BUS EXTENDER
BLDG #: 911B
RACK #: 5481
CHASSIS ID: CFE-911-AGSBI1
SLOT #: 21
A24 BASE ADDRESS: NA

DEVICE: BUS EXTENDER
BLDG #: 911B
RACK #: 3494
CHASSIS ID: CEX-911-AGSBI1
SLOT #: 1
A24 BASE ADDRESS: NA

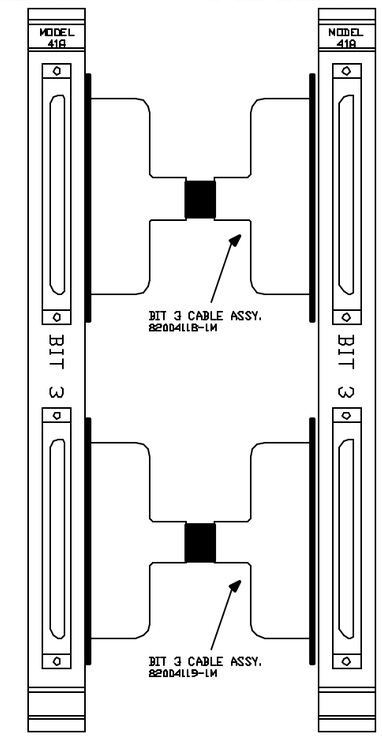

JUMPER LIST
C/S OUT
P/S IN
SYS IN
I/O B-15 NOT USED

JUMPER LIST
C/S OUT
P/S OUT
SYS IN
I/O B-15 NOT USED

-3	-2	-1	REF DESIGNATION	FSCM NO.	DESCRIPTION	MAT'L DWG NO.&NO. NO.
QTY REQD						

INTERPRET IN GENERAL ACCORDANCE WITH ASME Y14.24M-1989

UNLESS OTHERWISE SPECIFIED DIMENSIONS ARE IN INCHES
DECIMAL TOLERANCES
.X ±.030
.XX ±.015
.XXX ±.005
ANGULAR TOLERANCE ± .5°

OUTSTANDING ECN: NA
FINISH
BREAK SHARP EDGES
MAX. XX MIN. XX

Q.A. CATEGORY A-3		DATE
DRAWN BY	JASON ORTIZ	11/3/00
CHECKED BY		
DESIGN APPROVAL		
ENGINEER APPROVAL	R.MICHNOFF	
SUPVR. APPROVAL		

NEXT ASSEMBLY

BROOKHAVEN NATIONAL LABORATORY
UPTON, N.Y. 11973
C-A CONTROLS
AGS BEAM INHIBIT SYSTEM
BIT 3 MODULE

SIZE: D
DRAWING NUMBER: D09-E2751
REV. A

MATERIAL: ——— SCALE: FULL WEIGHT: - SHEET 10

*AUTOCAD

REV.	ZONE	ECN NO.	DATE	BY	CKR	APP.

Schoenfeld, Controls 10/13/2004 1:35 PM D09-E2751-11.dwg

V109 UTILITY MODULE
BLDG # 911B
RACK # 3494
CHASSIS ID: CEX-911-AGSBI1
SLOT # 3
A24 BASE ADDRESS: 0X008000

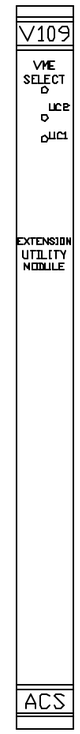

JUMPER LIST

A24 BASE ADDRESS= 8000h
E2-E13, E3-E14, E4-E15, E5-E16, E6-E17, E7-E18
E8-E19, E9-E20, E10-E23, E11-E21, E22-E25
SV1=OPEN
SV2=CLOSED
SV3=OPEN
SV4=OPEN

-3	-2	-1	REF DESIGNATION	ECN NO.	DESCRIPTION	MAT'L DWG NO.(INL NO.)
QTY REQD						

INTERPRET IN GENERAL ACCORDANCE WITH ASME Y14.24M-1989

UNLESS OTHERWISE SPECIFIED DIMENSIONS ARE IN INCHES

DECIMAL TOLERANCES
.X ±.030
.XX ±.015
.XXX ±.005
ANGULAR TOLERANCE ± .5°

NA FINISH

BREAK SHARP EDGES
MAX. XX MIN. XX

OUTSTANDING ECN

Q.A. CATEGORY A-3		DATE
DRAWN BY	JASON ORTIZ	11/3/00
CHECKED BY		
DESIGN APPROVAL		
ENGINEER APPROVAL		
SUPVR. APPROVAL		

NEXT ASSEMBLY

BROOKHAVEN NATIONAL LABORATORY
UPTON, N.Y. 11973
C-A CONTROLS
SERVICE BLDG. 911 AGS BEAM INHIBIT
V109 UTIL MODULE

SIZE D | DRAWING NUMBER D09-D2751 | REV. A

MATERIAL: | SCALE: NA | WEIGHT: | SHEET 11

1 *AUTOCAD

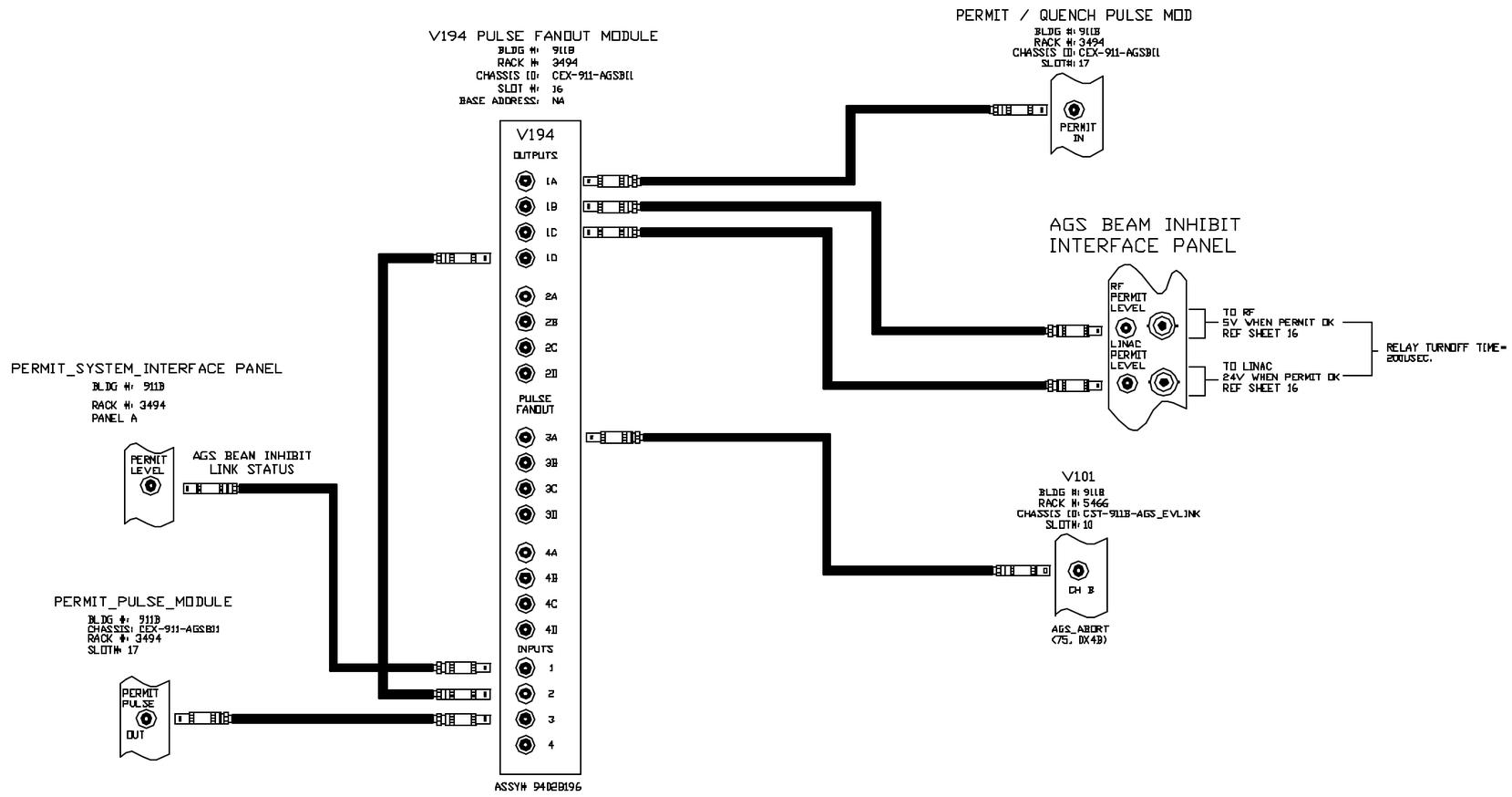

V194 PULSE FANOUT JUMPER LIST

JP1: 9-16
JP2: 10-15
JP3: 11-14
JP4: 12-13

JP9=OUT
JP10=OUT
JP11=OUT
JP12=OUT

E3-E4
E7-E8

-3 -2 -1 QTY REQD	REF DESIGNATION / ECN NO.	DESCRIPTION		MFG. DWG NO.(INC. NO.)
INTERPRET IN GENERAL ACCORDANCE WITH ASME Y14.24M-1989	Q.A. CATEGORY A-3	DATE	BROOKHAVEN NATIONAL LABORATORY UPTON, N.Y. 11973	
	DRAWN BY: Jason Ortiz	11/3/00		
UNLESS OTHERWISE SPECIFIED DIMENSIONS ARE IN INCHES	CHECKED BY		C-A CONTROLS	
DECIMAL TOLERANCES .X ±.030 .XX ±.015 .XXX ±.005 ANGULAR TOLERANCE ± .5°	DESIGN APPROVAL		BLDG. 911B, BEAM INHIBIT SYSTEM	
	ENGINEER APPROVAL: R. MICHNOFF		V194 PULSE FANOUT MODULE	
	SUPVR. APPROVAL		SIZE D — DRAWING NUMBER D09-E2751 — REV. A	
NA FINISH	BREAK SHARP EDGES MAX. XX MIN. XX	NEXT ASSEMBLY		
OUTSTANDING ECN			MATERIAL: ——— SCALE: NA WEIGHT: - SHEET 12	

REV.	ZONE	ECN NO.	DATE	BY	CKR	APP.

Schoenfeld, Controls 10/13/2004 1:34 PM D09-E2751-13.dwg

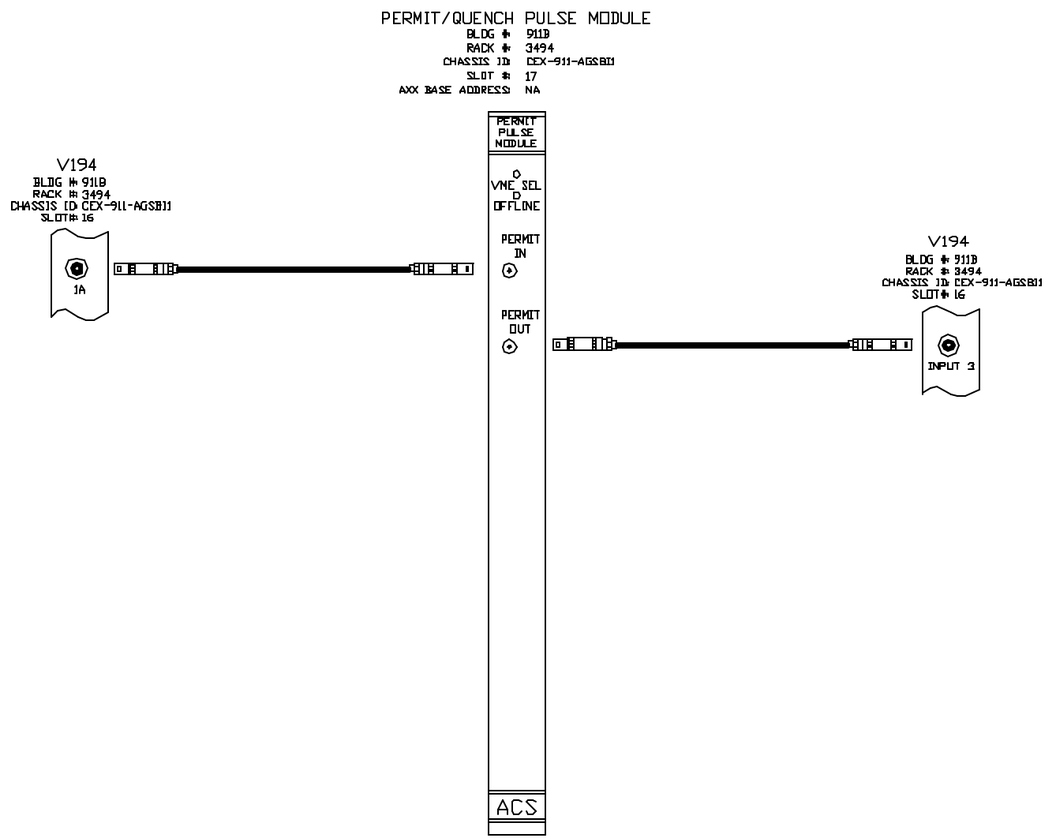

-3	-2	-1	REF DESIGNATION	ECN NO.	DESCRIPTION	MAT'L DFD NOLINK NO.
QTY REQD						

INTERPRET IN GENERAL ACCORDANCE WITH ASME Y14.24M-1989

UNLESS OTHERWISE SPECIFIED DIMENSIONS ARE IN INCHES

DECIMAL TOLERANCES
.X ±.030
.XX ±.015
.XXX ±.005
ANGULAR TOLERANCE ± .5°

NA FINISH

BREAK SHARP EDGES
MAX. XX MIN. XX

OUTSTANDING ECN

Q.A. CATEGORY A-3		DATE
DRAWN BY	Jason Ortiz	11/3/00
CHECKED BY		
DESIGN APPROVAL		
ENGINEER APPROVAL	R. MICHNOFF	
SUPVR. APPROVAL		

NEXT ASSEMBLY

BROOKHAVEN NATIONAL LABORATORY
UPTON, N.Y. 11973
C-A CONTROLS
BLDG 911B, AGS BEAM INHIBIT SYSTEM
QUENCH/PERMIT DETECT CIRCUIT

SIZE D | DRAWING NUMBER D09-E2751 | REV. A

MATERIAL: ——— SCALE: NA WEIGHT: – SHEET 13

*AUTOCAD

Schoenfeld, Controls 10/13/2004 1:33 PM D09-E2751-14.dwg

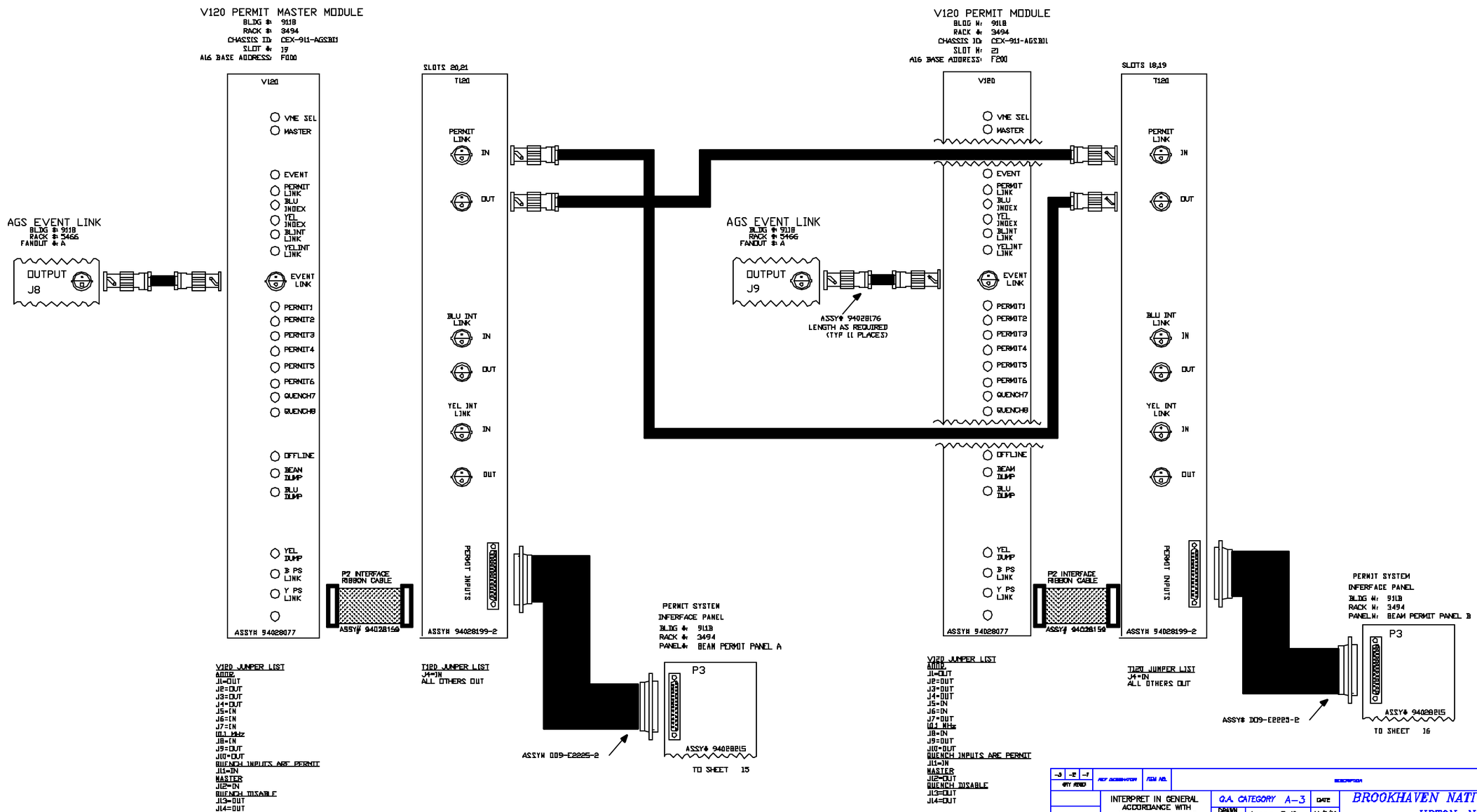

REV.	ZONE	ECN NO.	DATE	BY	CKR	APP.

-3	-2	-1	REF DESIGNATION	ITEM NO.	DESCRIPTION	MFG. DWG NO./INT. NO.
QTY REQD						

INTERPRET IN GENERAL ACCORDANCE WITH ASME Y14.24M-1989

UNLESS OTHERWISE SPECIFIED DIMENSIONS ARE IN INCHES

DECIMAL TOLERANCES
.X ±.030
.XX ±.015
.XXX ±.005
ANGULAR TOLERANCE ± .5°

NA FINISH

BREAK SHARP EDGES MAX. .XX MIN. .XX

OUTSTANDING ECN

Q.A. CATEGORY A-3

		DATE
DRAWN BY	Jason Ortiz	11/3/00
CHECKED BY		
DESIGN APPROVAL		
ENGINEER APPROVAL	R. MICHNOFF	
SUPVR. APPROVAL		

NEXT ASSEMBLY

BROOKHAVEN NATIONAL LABORATORY
UPTON, N.Y. 11973
C-A CONTROLS
BLDG. 911B, CEX-911-AGSBI1
V120/T120 PERMIT SYSTEM

SIZE D — D09-E2751 — REV. A
DRAWING NUMBER

MATERIAL: ——— SCALE: NA WEIGHT: - SHEET 14

*AUTOCAD

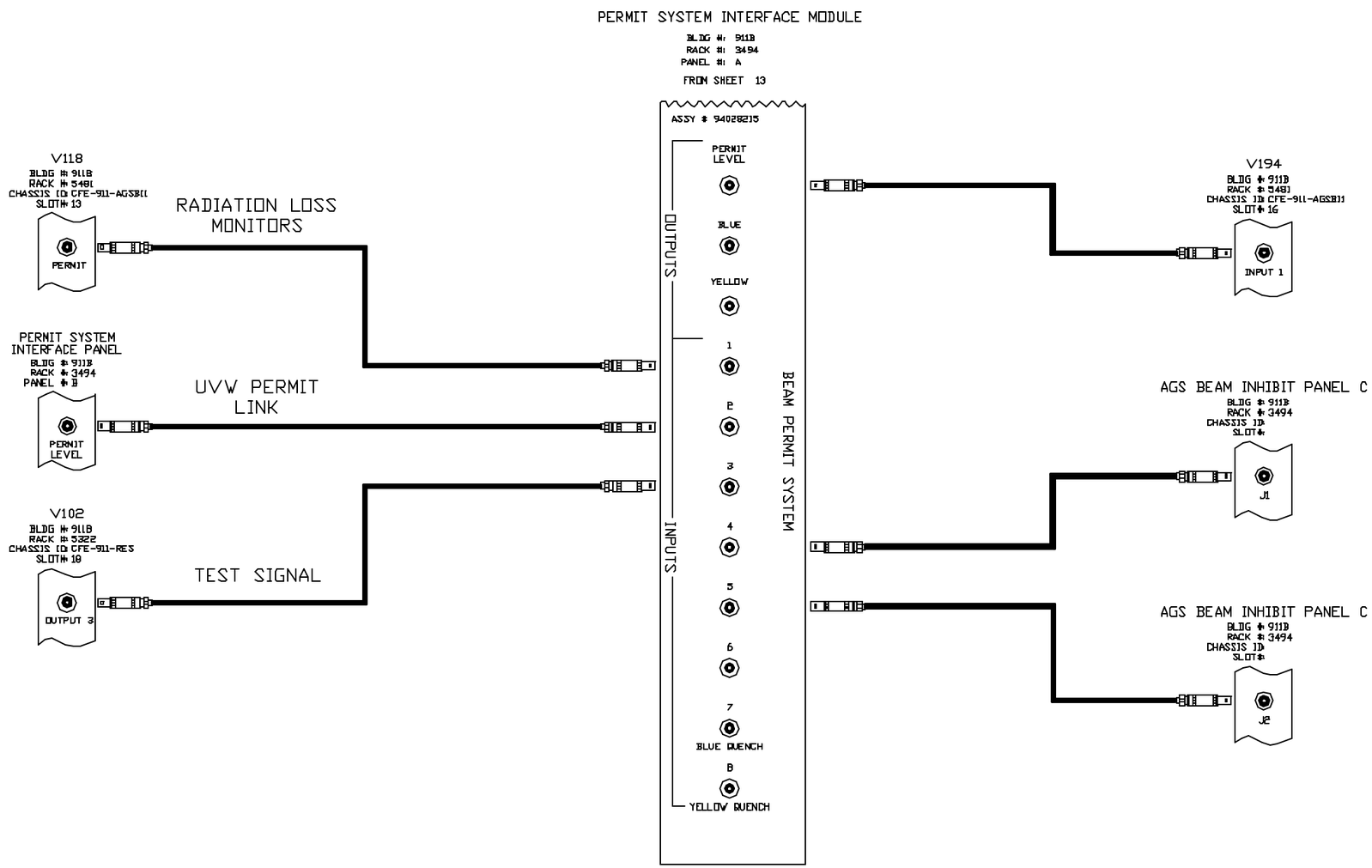

-3	-2	-1	REF DESIGNATION	ECN NO.	DESCRIPTION	MFG. DWG AQUIRE NO.
QTY REQD						

INTERPRET IN GENERAL ACCORDANCE WITH ASME Y14.24M-1989

UNLESS OTHERWISE SPECIFIED DIMENSIONS ARE IN INCHES

DECIMAL TOLERANCES
.X ± .030
.XX ± .015
.XXX ± .005
ANGULAR TOLERANCE ± .5°

NA FINISH

BREAK SHARP EDGES

MAX. XX MIN. XX

OUTSTANDING ECN

Q.A. CATEGORY A-3

		DATE
DRAWN BY	Jason Ortiz	6/4/2003
CHECKED BY		
DESIGN APPROVAL		
ENGINEER APPROVAL	R. MICHNOFF	
SUPVR. APPROVAL		

NEXT ASSEMBLY

BROOKHAVEN NATIONAL LABORATORY
UPTON, N.Y. 11973
C-A CONTROLS
BLDG. 911B, BEAM INHIBIT SYSTEM
PERMIT SYSTEM INTERFACE PANEL

SIZE D | DRAWING NUMBER D09-E2751 | REV. A

MATERIAL: ——— | SCALE: NA | WEIGHT: - | SHEET 15

*AUTOCAD

Schoenfeld, Controls 10/13/2004 1:31 PM D09-E2751-16.dwg

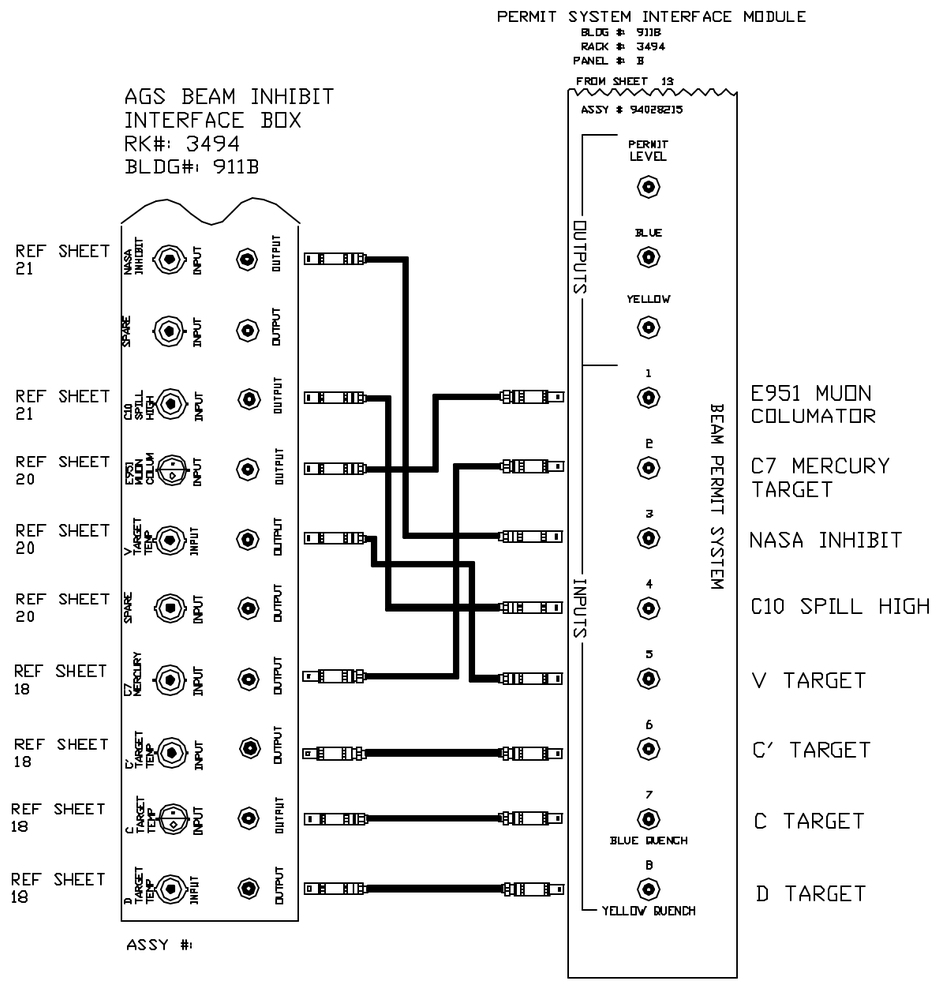

INTERPRET IN GENERAL ACCORDANCE WITH ASME Y14.24M-1989	Q.A. CATEGORY A-3
UNLESS OTHERWISE SPECIFIED DIMENSIONS ARE IN INCHES	DRAWN BY Jason Ortiz 11/3/00
DECIMAL TOLERANCES .X ±.030 .XX ±.015 .XXX ±.005 ANGULAR TOLERANCE ± .5°	CHECKED BY
	DESIGN APPROVAL
	ENGINEER APPROVAL R. MICHNOFF
	SUPVR. APPROVAL
NA FINISH	BREAK SHARP EDGES MAX. XX MIN. XX
NEXT ASSEMBLY	

BROOKHAVEN NATIONAL LABORATORY
UPTON, N.Y. 11973
C-A CONTROLS
BLDG. 911B, BEAM INHIBIT SYSTEM
PERMIT SYSTEM INTERFACE PANEL

SIZE D — DRAWING NUMBER D09-E2751 — REV. A

MATERIAL: —— SCALE: NA WEIGHT: - SHEET 16

*AUTOCAD

Schoenfeld, Controls 10/13/2004 2:08 PM D09-E2751-17.dwg

AGS BEAM INHIBIT
INTERFACE BOX
RK#: 3494
BLDG#: 911B

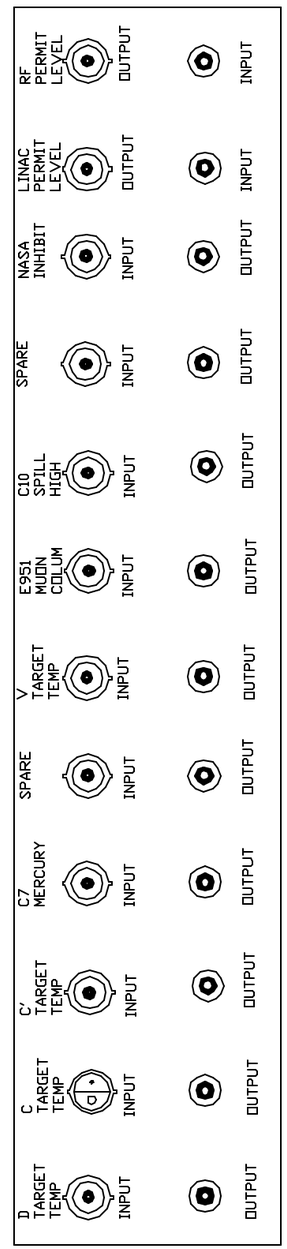

TO RF REF SHEET 18	FROM CEX-911-AGSBI1 V194 OUTPUT 1B REF SHEET 12, 18
TO LINAC REF SHEET 18	FROM CEX-911-AGSBI1 V194 OUTPUT 1C REF SHEET 12, 18
FROM NASA INHIBIT REF SHEET 20	TO PERMIT PANEL B INPUT 3 REF SHEET 16
FROM C10 SPILL REF SHEET 20	TO PERMIT PANEL B INPUT 4 REF SHEET 16
FROM E951 MUON COLUMATOR REF SHEET 19	TO PERMIT PANEL B INPUT 1 REF SHEET 16
FROM V TARGET REF SHEET 19	TO PERMIT PANEL B INPUT 5 REF SHEET 16
FROM SPARE REF SHEET 19	TO SPARE REF SHEET XX
FROM C7 MERCURY REF SHEET 17	TO PERMIT PANEL B INPUT 2 REF SHEET 16
FROM C TARGET REF SHEET 17	TO PERMIT PANEL B INPUT 6 REF SHEET 16
FROM C TARGET REF SHEET 17	TO PERMIT PANEL B INPUT 7 REF SHEET 16
FROM D TARGET REF SHEET 17	TO PERMIT PANEL B INPUT 8 REF SHEET 16

ASSY #:

REV.	ZONE	ECN NO.	DATE	BY	CKD	APP.

INTERPRET IN GENERAL ACCORDANCE WITH ASME Y14.24M-1989	Q.A. CATEGORY A-3	DATE	BROOKHAVEN NATIONAL LABORATORY UPTON, N.Y. 11973
	DRAWN BY Jason Ortiz	11/21/10	
UNLESS OTHERWISE SPECIFIED DIMENSIONS ARE IN INCHES	CHECKED BY		C-A CONTROLS WIRING DIAGRAM
DECIMAL TOLERANCES .X ±.030 .XX ±.015 .XXX ±.005 ANGULAR TOLERANCE ± 5°	DESIGN APPROVAL		BLDG. 911B
	ENGINEER APPROVAL		AGS BEAM INHIBIT INTERFACE BOX
	SUPVR. APPROVAL		SIZE D — DRAWING NUMBER D09-E2751 — REV. A
NA FINISH — BREAK SHARP EDGES — MAX. XX MIN. XX	NEXT ASSEMBLY		MATERIAL: — SCALE: FULL — WEIGHT: - — SHEET 17

*AUTOCAD

Schoenfeld, Controls 10/13/2004 2:07 PM D09-E2751-18.dwg

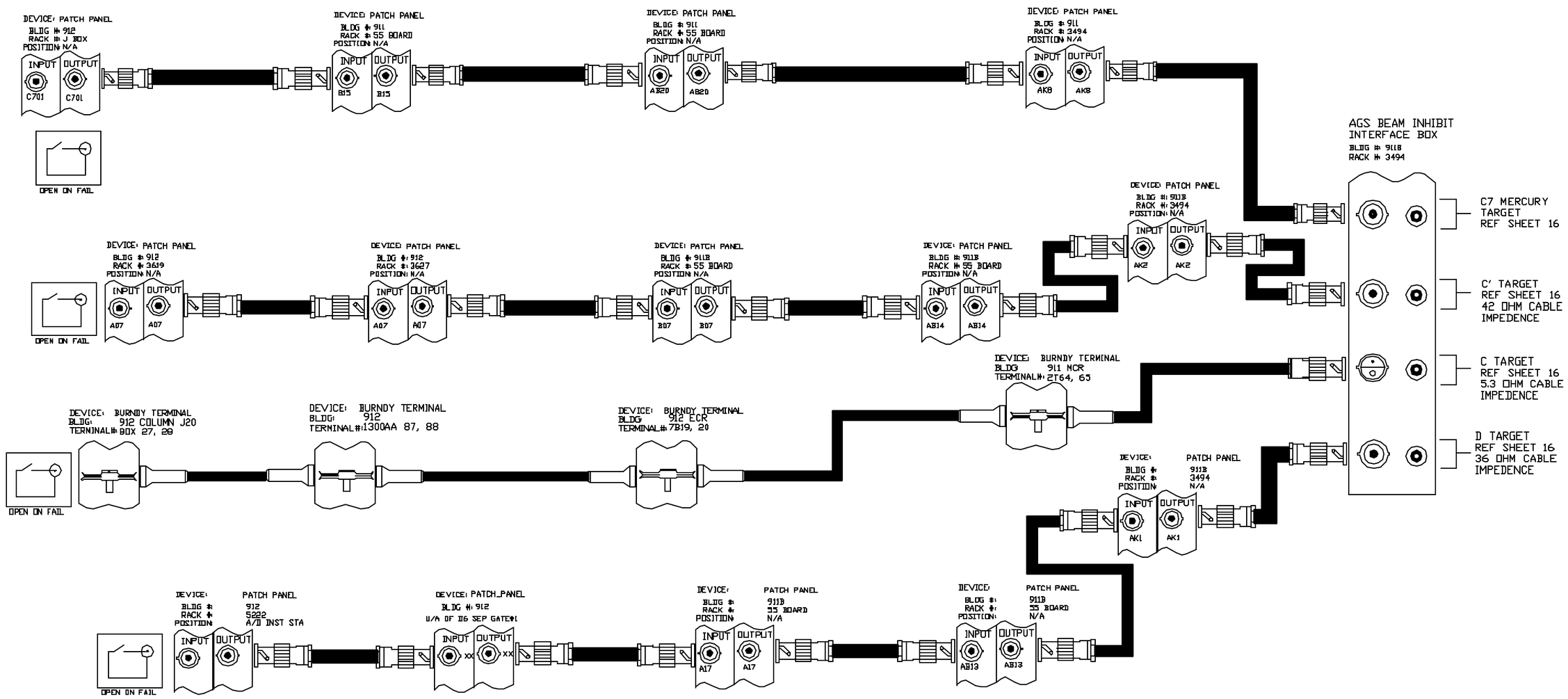

REV.	ZONE	ECN NO.	DATE	BY	CHKR	APP.

-3 -2 -1 QTY REQD	REF DESIGNATION	ITEM NO.	DESCRIPTION		MFG. DPO NO./INL NO.
	INTERPRET IN GENERAL ACCORDANCE WITH ASME Y14.24M-1989	Q.A. CATEGORY A-3		DATE	BROOKHAVEN NATIONAL LABORATORY
		DRAWN BY	Jason Ortiz	11/13/10	UPTON, N.Y. 11973
	UNLESS OTHERWISE SPECIFIED DIMENSIONS ARE IN INCHES	CHECKED BY			C-A CONTROLS WIRING DIAGRAM
	DECIMAL TOLERANCES .X ±.030 .XX ±.015 .XXX ±.005 ANGULAR TOLERANCE ± .5°	DESIGN APPROVAL			BLDG. 911B
		ENGINEER APPROVAL	R. MICHNOFF		AGS BEAM INHIBIT SYSTEM
		SUPVR. APPROVAL			SIZE A — DRAWING NUMBER D09-E2751 — REV. A
	NA FINISH	BREAK SHARP EDGES MAX. XX MIN. XX	NEXT ASSEMBLY		MATERIAL: —— SCALE: FULL WEIGHT: - SHEET 18
OUTSTANDING ECN					

1 *AUTOCAD

Schoenfeld, Controls 10/13/2004 2:05 PM D09-E2751-19.dwg

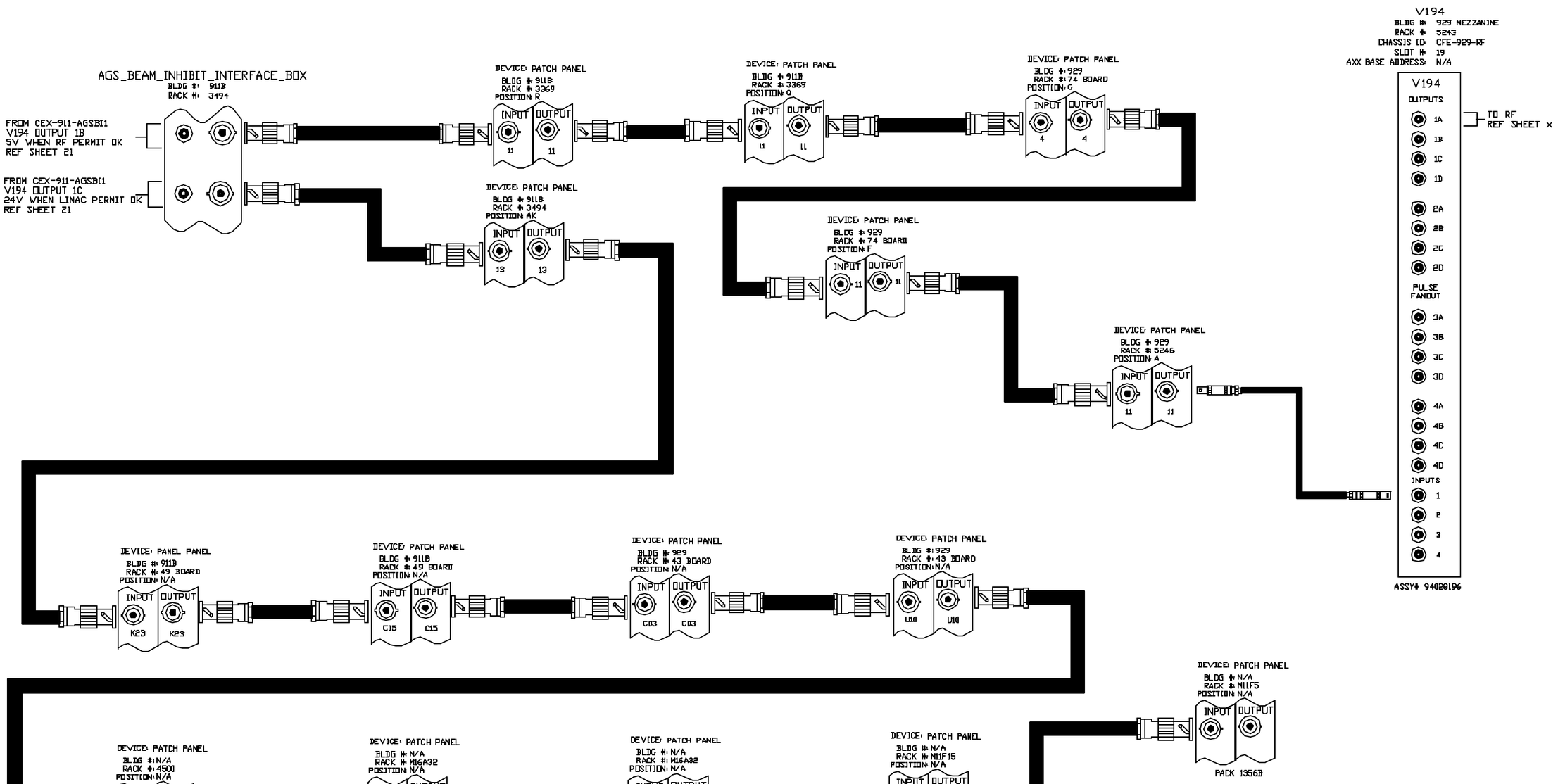

REV.	ZONE	ECN NO.	DATE	BY	CKR	APP.

-3 -2 -1 QTY REQD	REF DESIGNATION	ITEM NO.	DESCRIPTION		MFG. DWG NO./MFR. NO.
	INTERPRET IN GENERAL ACCORDANCE WITH ASME Y14.24M-1989	Q.A. CATEGORY A-3	DATE	BROOKHAVEN NATIONAL LABORATORY	
		DRAWN BY Jason Ortiz	11/1/00	UPTON, N.Y. 11973	
	UNLESS OTHERWISE SPECIFIED DIMENSIONS ARE IN INCHES	CHECKED BY		C-A CONTROLS WIRING DIAGRAM	
	DECIMAL TOLERANCES .X ±.030 .XX ±.015 .XXX ±.005 ANGULAR TOLERANCE ± .5°	DESIGN APPROVAL		BLDG. 911B	
		ENGINEER APPROVAL	R.MICHNOFF	AGS BEAM INHIBIT SYSTEM	
		SUPVR APPROVAL		SIZE D	D09-E2751 REV. A
OUTSTANDING ECN	NA FINISH	BREAK SHARP EDGES MAX. XX MIN. XX	NEXT ASSEMBLY	MATERIAL: ———	SCALE: FULL WEIGHT: - SHEET 18

1 *AUTOCAD

Schoenfeld, Controls 10/13/2004 2:01 PM D09-E2751-20.dwg

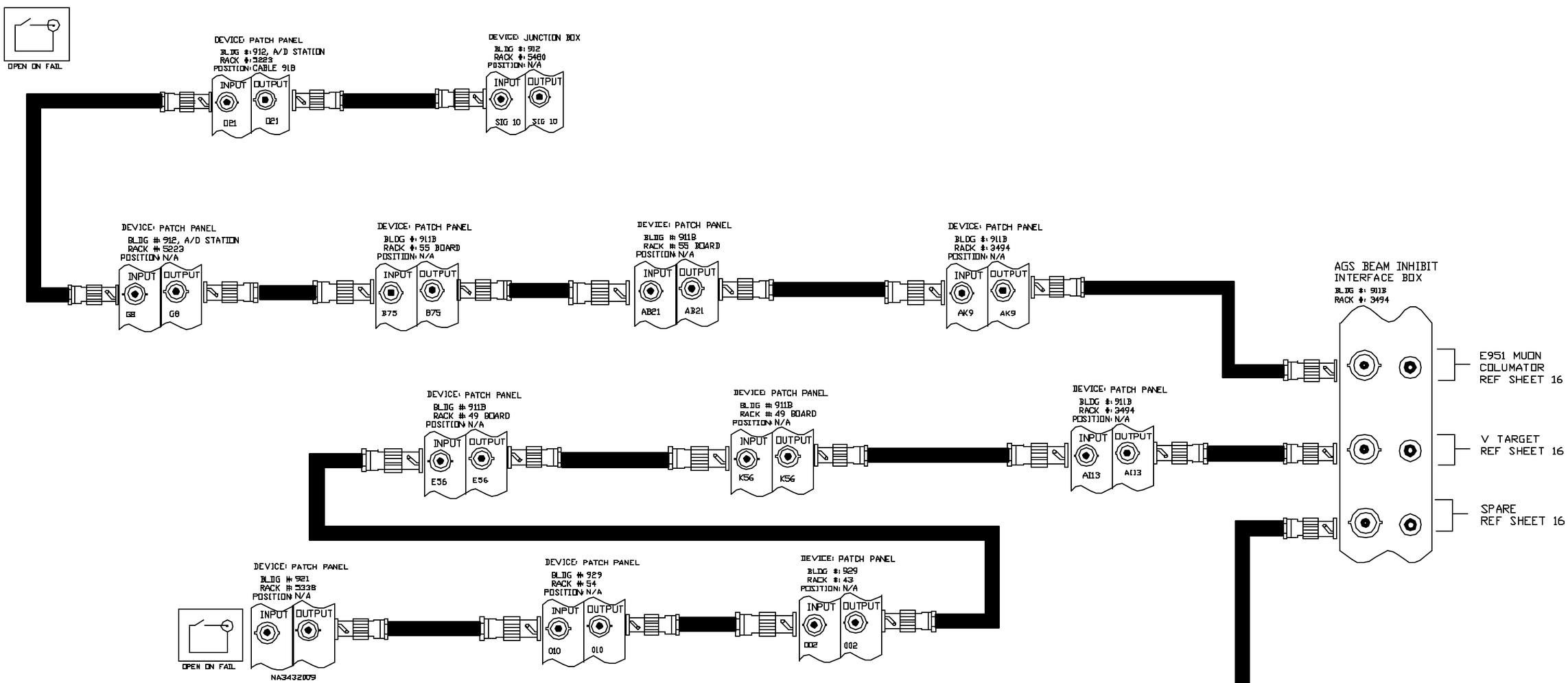

REV.	ZONE	ECN NO.	DATE	BY	CHK	APP.

INTERPRET IN GENERAL ACCORDANCE WITH ASME Y14.24M-1989	Q.A. CATEGORY A-3	DATE	BROOKHAVEN NATIONAL LABORATORY UPTON, N.Y. 11973
UNLESS OTHERWISE SPECIFIED DIMENSIONS ARE IN INCHES	DRAWN BY Jason Ortiz	11/1/00	C-A CONTROLS WIRING DIAGRAM
DECIMAL TOLERANCES .X ±.030 .XX ±.015 .XXX ±.005 ANGULAR TOLERANCE ± .5°	CHECKED BY		911B
	DESIGN APPROVAL		AGS BEAM INHIBIT SYSTEM
	ENGINEER APPROVAL R. MICHNOFF		
	SUPVR. APPROVAL		SIZE D — D09-E2751 — REV. A
NA FINISH	BREAK SHARP EDGES MAX. XX MIN. XX	NEXT ASSEMBLY	DRAWING NUMBER
OUTSTANDING ECN			MATERIAL: — SCALE: FULL WEIGHT: - SHEET 20

*AUTOCAD

Schoenfeld, Controls 10/13/2004 2:01 PM D09-E2751-21.dwg

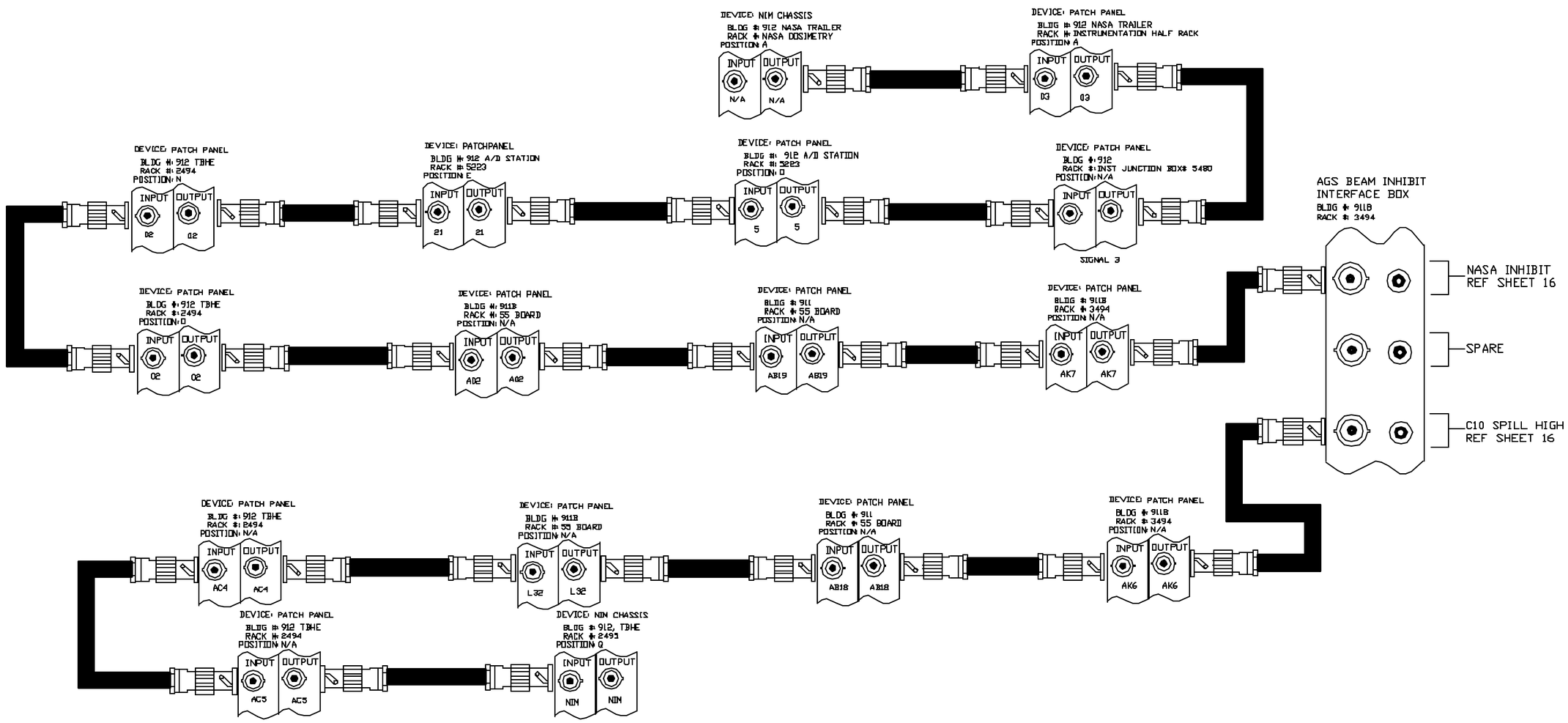

REV.	ZONE	ECN NO.	DATE	BY	CKR	APP.

-3	-2	-1	REF DESIGNATION	FIGN NO.	DESCRIPTION	MAT'L DWG NO./INV. NO.
QTY REQD						

INTERPRET IN GENERAL ACCORDANCE WITH ASME Y14.24M-1989

UNLESS OTHERWISE SPECIFIED DIMENSIONS ARE IN INCHES

DECIMAL TOLERANCES
.X ±.030
.XX ±.015
.XXX ±.005
ANGULAR TOLERANCE ± .5°

NA / FINISH

BREAK SHARP EDGES

MAX. XX MIN. XX

OUTSTANDING ECN

Q.A. CATEGORY A-3

		DATE
DRAWN BY	JASON ORTIZ	11/12/10
CHECKED BY		
DESIGN APPROVAL		
ENGINEER APPROVAL	R.MICHNOFF	
SUPVR. APPROVAL		

NEXT ASSEMBLY

BROOKHAVEN NATIONAL LABORATORY
UPTON, N.Y. 11973

C-A CONTROLS WIRING DIAGRAM

BLDG. 911B

AGS BEAM INHIBIT SYSTEM

SIZE D

DRAWING NUMBER D09-E2751

REV. A

MATERIAL: ——— SCALE: FULL WEIGHT: - SHEET 21

*AUTOCAD

Schoenfeld, Controls 10/13/2004 1:24 PM D09-E2751-22.dwg

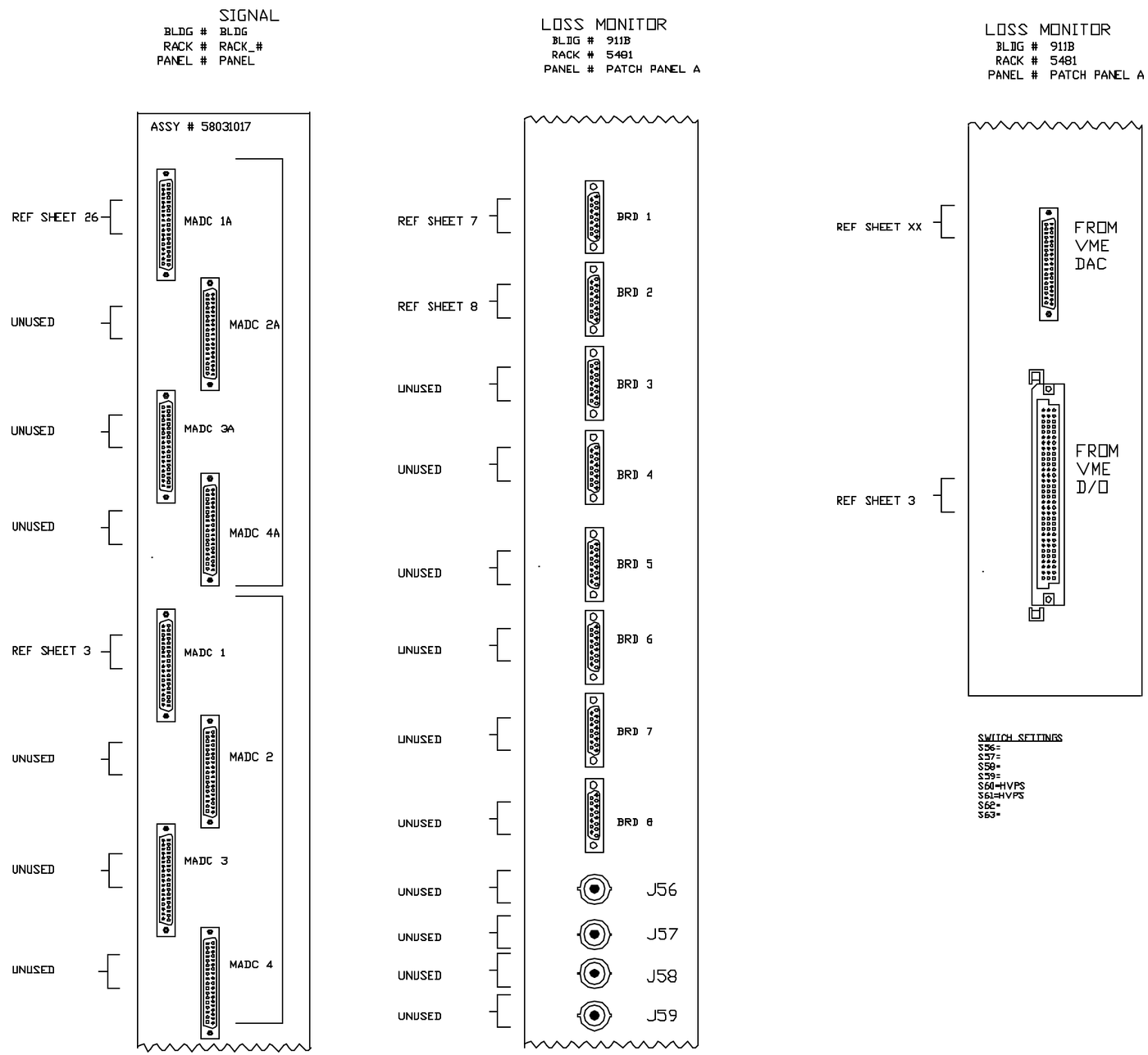

REV.	ZONE	ECN NO.	DATE	BY	CKR	APP.

-3 -2 -1 QTY REQD	REF DESIGNATOR	ITEM NO.	DESCRIPTION		MFG. DWG NO./INS. NO.

INTERPRET IN GENERAL ACCORDANCE WITH ASME Y14.24M-1989

UNLESS OTHERWISE SPECIFIED DIMENSIONS ARE IN INCHES

DECIMAL TOLERANCES
.X ± .030
.XX ± .015
.XXX ± .005
ANGULAR TOLERANCE ± 5°

OUTSTANDING ECN: NA

FINISH

BREAK SHARP EDGES

MAX. XX MIN. XX

Q.A. CATEGORY A-3

		DATE
DRAWN BY	Jason Ortiz	11/2/00
CHECKED BY		
DESIGN APPROVAL		
ENGINEER APPROVAL	R. MICHNOFF	
SUPVR. APPROVAL		

NEXT ASSEMBLY

BROOKHAVEN NATIONAL LABORATORY
UPTON, N.Y. 11973

C-A CONTROLS WIRING DIAGRAM

911B, AGS BEAM INHIBIT SYSTEM

RHIC RING LOSS MONITOR

SIZE: D

DRAWING NUMBER: D09-E2751

REV. A

MATERIAL: ——— SCALE: NA WEIGHT: - SHEET 22

*AUTOCAD

Schoenfeld, Controls 10/13/2004 1:23 PM D09-E2751-23.dwg

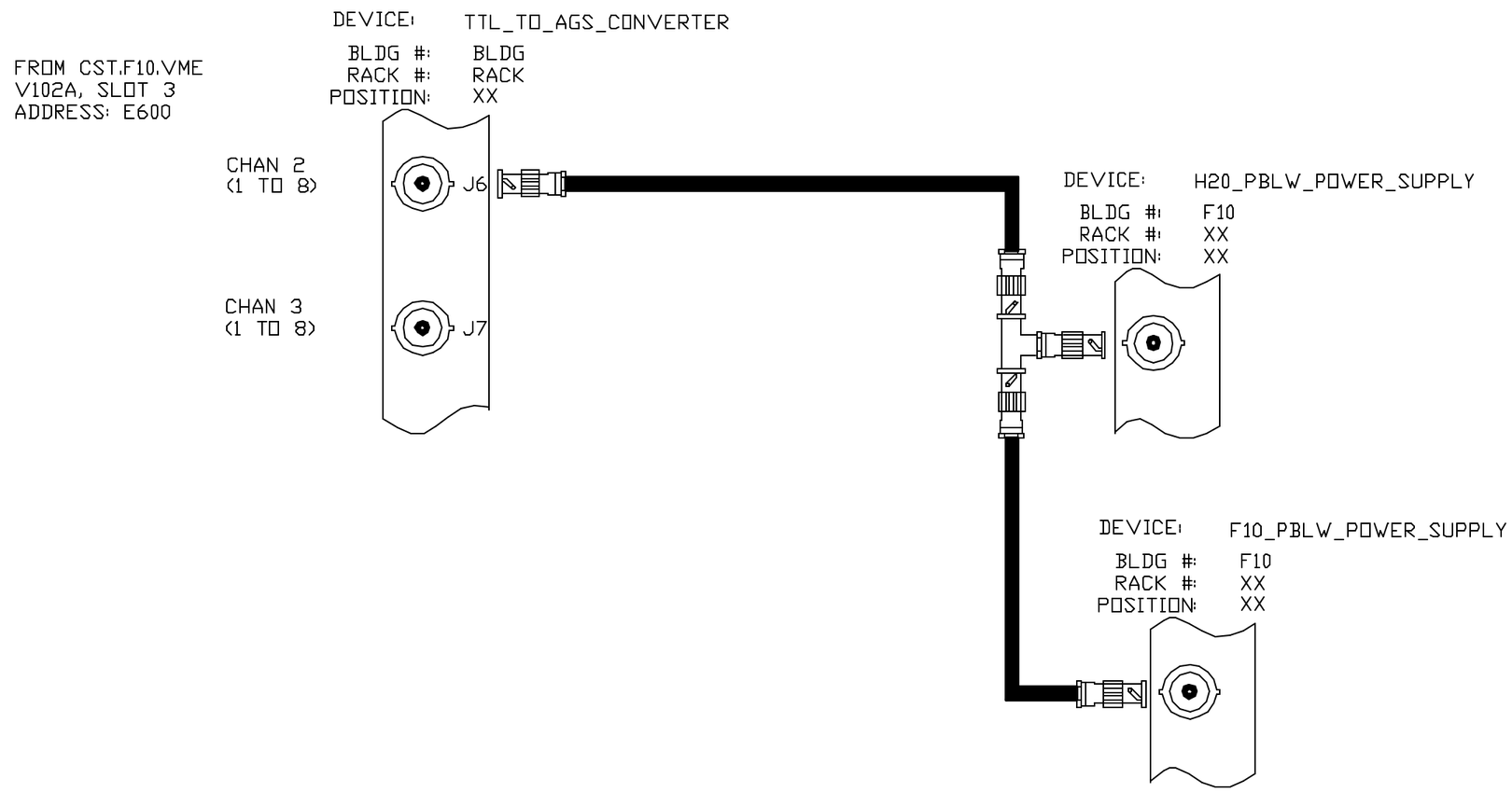

INTERPRET IN GENERAL ACCORDANCE WITH ASME Y14.24M-1989	Q.A. CATEGORY A-3		BROOKHAVEN NATIONAL LABORATORY
	DRAWN BY JASON ORTIZ	11/3/00	UPTON, N.Y. 11973
UNLESS OTHERWISE SPECIFIED DIMENSIONS ARE IN INCHES	CHECKED BY		C-A CONTROLS WIRING DIAGRAM
DECIMAL TOLERANCES .X ±.030 .XX ±.015 .XXX ±.005 ANGULAR TOLERANCE ± .5°	DESIGN APPROVAL		AGS BEAM INHIBIT SYSTEM
	ENGINEER APPROVAL	R. MICHNOFF	BLDG: F10
	SUPVR. APPROVAL		SIZE D — DRAWING NUMBER D09-E2751 — REV. A
NA FINISH — BREAK SHARP EDGES MAX. XX MIN. XX	NEXT ASSEMBLY		MATERIAL: ——— SCALE: FULL WEIGHT: – SHEET 23

*AUTOCAD

Schoenfeld, Controls 10/13/2004 1:23 PM D09-E2751-24.dwg

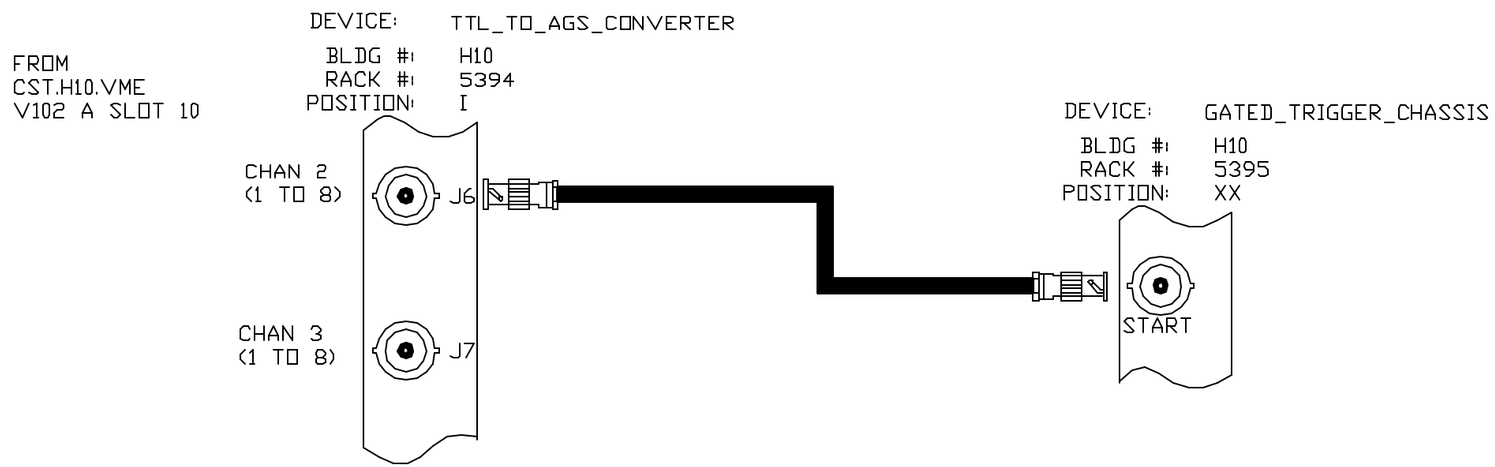

INTERPRET IN GENERAL ACCORDIANCE WITH ASME Y14.24M-1989	Q.A. CATEGORY A-3	DATE	BROOKHAVEN NATIONAL LABORATORY UPTON, N.Y. 11973
	DRAWN BY: JASON ORTIZ	11/3/00	
UNLESS OTHERWISE SPECIFIED DIMENSIONS ARE IN INCHES	CHECKED BY		C-A CONTROLS WIRING DIAGRAM
DECIMAL TOLERANCES .X ±.030 .XX ±.015 .XXX ±.005 ANGULAR TOLERANCE ± .5°	DESIGN APPROVAL		AGS BEAM INHIBIT SYSTEM
	ENGINEER APPROVAL: R. MICHNOFF		BLDG: H10
	SUPVR. APPROVAL		SIZE: D — DRAWING NUMBER: D09-E2751 — REV. A
NA FINISH	BREAK SHARP EDGES MAX. XX MIN. XX	NEXT ASSEMBLY	MATERIAL: ——— SCALE: FULL WEIGHT: - SHEET 24

*AUTOCAD

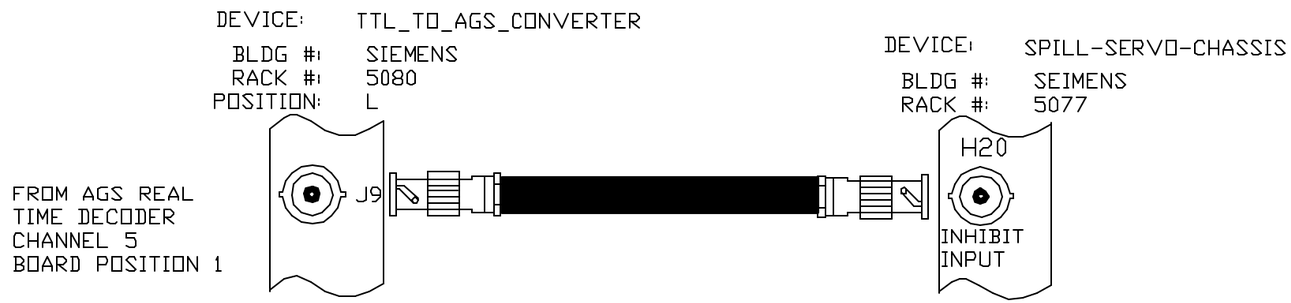

INTERPRET IN GENERAL ACCORDANCE WITH ASME Y14.24M-1989	Q.A. CATEGORY A-3		DATE	BROOKHAVEN NATIONAL LABORATORY	
	DRAWN BY	Jason Ortiz	11/3/00	UPTON, N.Y. 11973	
UNLESS OTHERWISE SPECIFIED DIMENSIONS ARE IN INCHES	CHECKED BY			C-A CONTROLS WIRING DIAGRAM	
DECIMAL TOLERANCES .X ±.030 .XX ±.015 .XXX ±.005 ANGULAR TOLERANCE ± .5°	DESIGN APPROVAL			AGS BEAM INHIBIT SYSTEM	
	ENGINEER APPROVAL			SEIMENS	
	SUPVR. APPROVAL			SIZE D — D09-E2751 — REV. A	
NA FINISH	BREAK SHARP EDGES MAX. XX MIN. XX	NEXT ASSEMBLY		DRAWING NUMBER	
OUTSTANDING ECN				MATERIAL: ——— SCALE: FULL WEIGHT: - SHEET 25	

1 *AUTOCAD

Schoenfeld, Controls 10/13/2004 1:21 PM D09-E2751-26.dwg

RHIC RING LOSS MONITOR
PATCH PANEL

BLDG #: 911B
RACK #: 5481
PANEL: A

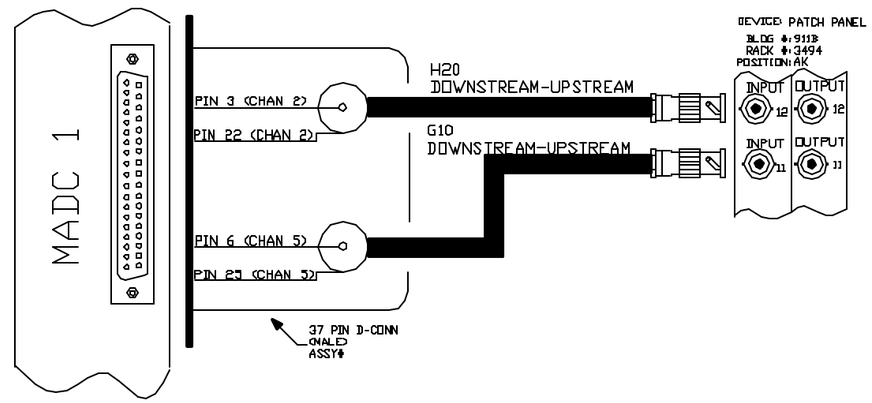

NOTE: ON LOSS MONITOR PATCH PANEL
PINS 1 AND 6 ON U2 ARE JUMPERED.
PINS 13 AND 8 ON U3 ARE JUMPERED.

-3 -2 -1 QTY REQD	REF DESIGNATION	ITEM NO.	DESCRIPTION		NAT'L DWG ALLOW. NO.
	INTERPRET IN GENERAL ACCORDANCE WITH ASME Y14.24M-1989	Q.A. CATEGORY A-3	DATE	BROOKHAVEN NATIONAL LABORATORY UPTON, N.Y. 11973	
		DRAWN BY JASON ORTIZ	12/12/00		
	UNLESS OTHERWISE SPECIFIED DIMENSIONS ARE IN INCHES	CHECKED BY		C-A CONTROLS WIRING DIAGRAM	
	DECIMAL TOLERANCES .X ±.030 .XX ±.015 .XXX ±.005 ANGULAR TOLERANCE ± .5°	DESIGN APPROVAL		BLDG. 911B, AGS BEAM INHIBIT SYSTEM	
		ENGINEER APPROVAL R. MICHNOFF		H20/G10 DIFFERENCE INPUTS	
		SUPVR. APPROVAL		SIZE D	D09-E2751 REV. A
OUTSTANDING ECN	NA FINISH	BREAK SHARP EDGES MAX. XX MIN. XX	NEXT ASSEMBLY	DRAWING NUMBER	
				MATERIAL: ———	SCALE: FULL WEIGHT: - SHEET 29

*AUTOCAD