REV.	ZONE	ECN NO.	DATE	BY	CKR	APP.

Phil Pape, Controls Division 4/4/2003 4:21 PM permit_system.dwg

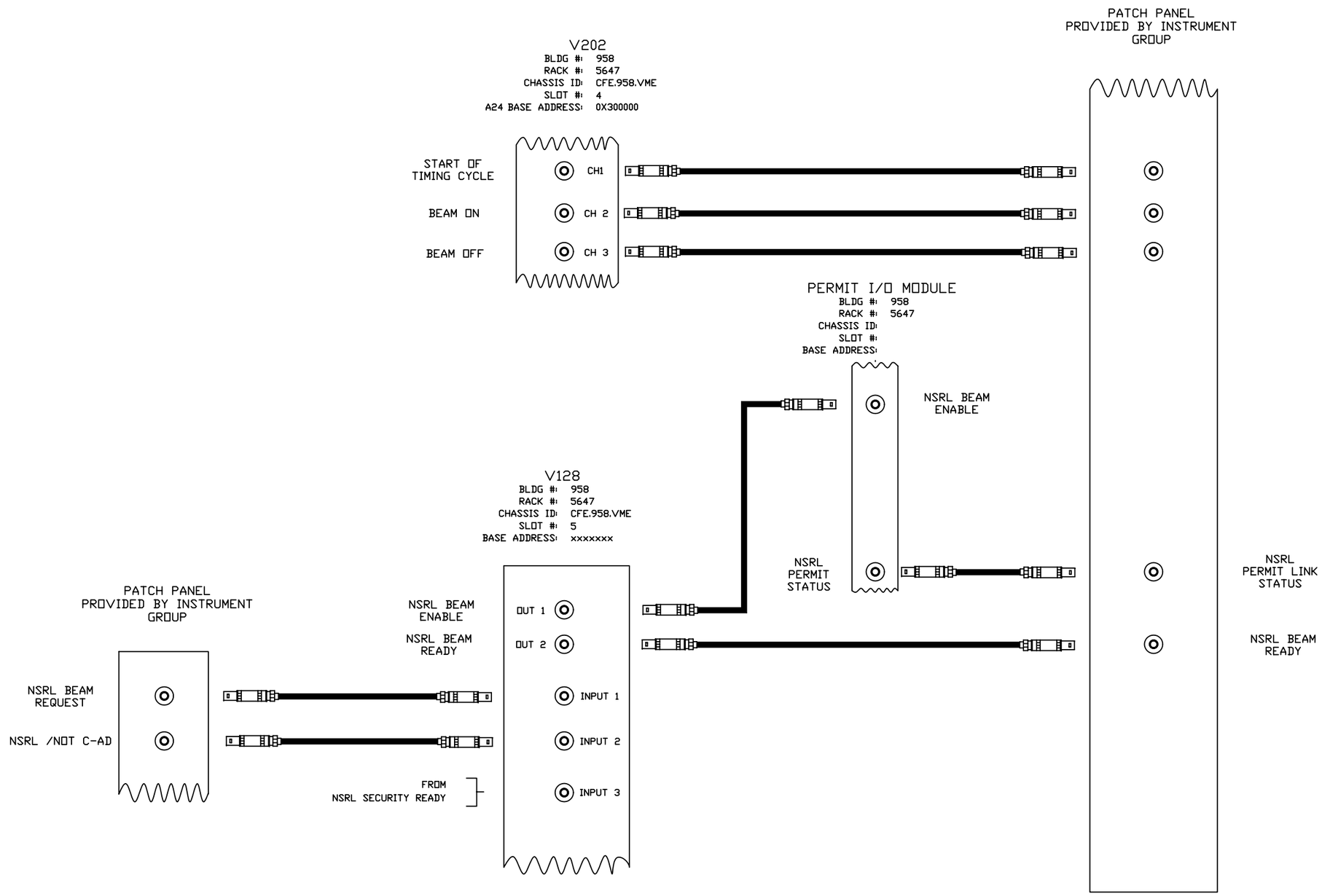

-3	-2	-1	REF DESIGNATOR	ITEM NO.	DESCRIPTION	MAT'L DWG NO./BML NO.
QTY REQD						

INTERPRET IN GENERAL ACCORDANCE WITH ASME Y14.24M-1989

UNLESS OTHERWISE SPECIFIED DIMENSIONS ARE IN INCHES

DECIMAL TOLERANCES
.X ±.030
.XX ±.015
.XXX ±.005
ANGULAR TOLERANCE
± .5°

NA FINISH

BREAK SHARP EDGES
MAX. XX MIN. XX

OUTSTANDING ECN

Q.A. CATEGORY A-3

		DATE
DRAWN BY	PAPE	04/04/03
CHECKED BY		
DESIGN APPROVAL		
ENGINEER APPROVAL		
SUPVR. APPROVAL		

NEXT ASSEMBLY

BROOKHAVEN NATIONAL LABORATORY
UPTON, N.Y. 11973

CONTROLS DIVISION

WIRING DIAGRAM

PERMIT SYSTEM

SIZE D | Drawing Number | REV. A

DRAWING NUMBER

MATERIAL: ——— SCALE: FULL WEIGHT: – SHEET 1 OF 1

*AUTOCAD