FUTURE INSTALLATION

Phil Pape, Controls Division 4/30/2003 11:03 AM RESET_Link.dwg

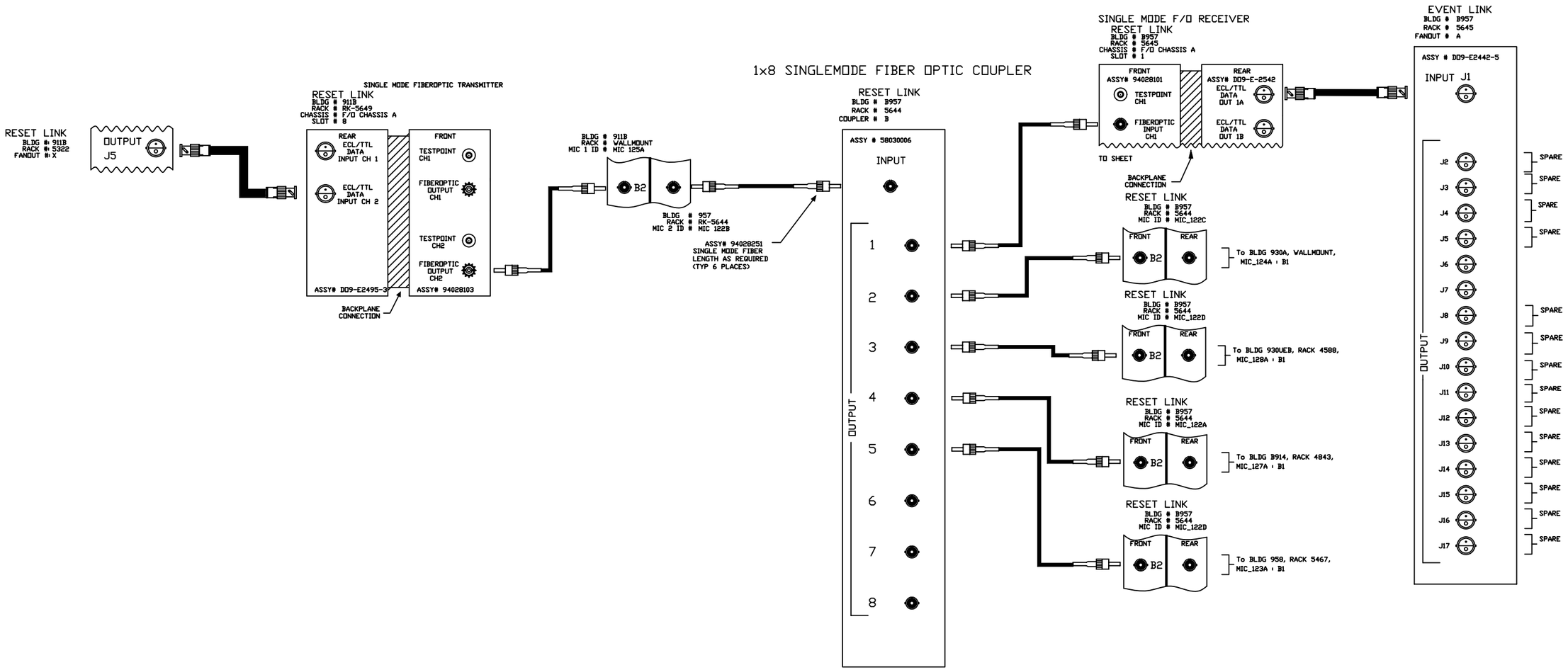

-3	-2	-1	REF DESIGNATOR	ITEM NO.	DESCRIPTION	MAT'L DWG NO./BML NO.
QTY REQD						

INTERPRET IN GENERAL ACCORDANCE WITH ASME Y14.24M-1989	Q.A. CATEGORY A-3	DATE	BROOKHAVEN NATIONAL LABORATORY
	DRAWN BY P. Pape	04/28/03	UPTON, N.Y. 11973
UNLESS OTHERWISE SPECIFIED DIMENSIONS ARE IN INCHES	CHECKED BY		C – A CONTROLS
DECIMAL TOLERANCES .X ±.030 .XX ±.015 .XXX ±.005 ANGULAR TOLERANCE ± .5°	DESIGN APPROVAL		NSRL WIRING DIAGRAM
	ENGINEER APPROVAL		RESET LINK
	SUPVR. APPROVAL		SIZE D / DRAWING NUMBER / REV. A
OUTSTANDING ECN / NA FINISH / BREAK SHARP EDGES MAX. XX MIN. XX	NEXT ASSEMBLY		MATERIAL: ——— / SCALE: NA / WEIGHT: – / SHEET X OF XX

*AUTOCAD