REV.	ZONE	ECN NO.	DATE	BY	CKR	APP.

Phil Pape, Controls Division 5/30/2002 11:41 AM FRONT_END_TYP.dwg

TYPICAL BAF FRONT END COMPUTER & V108

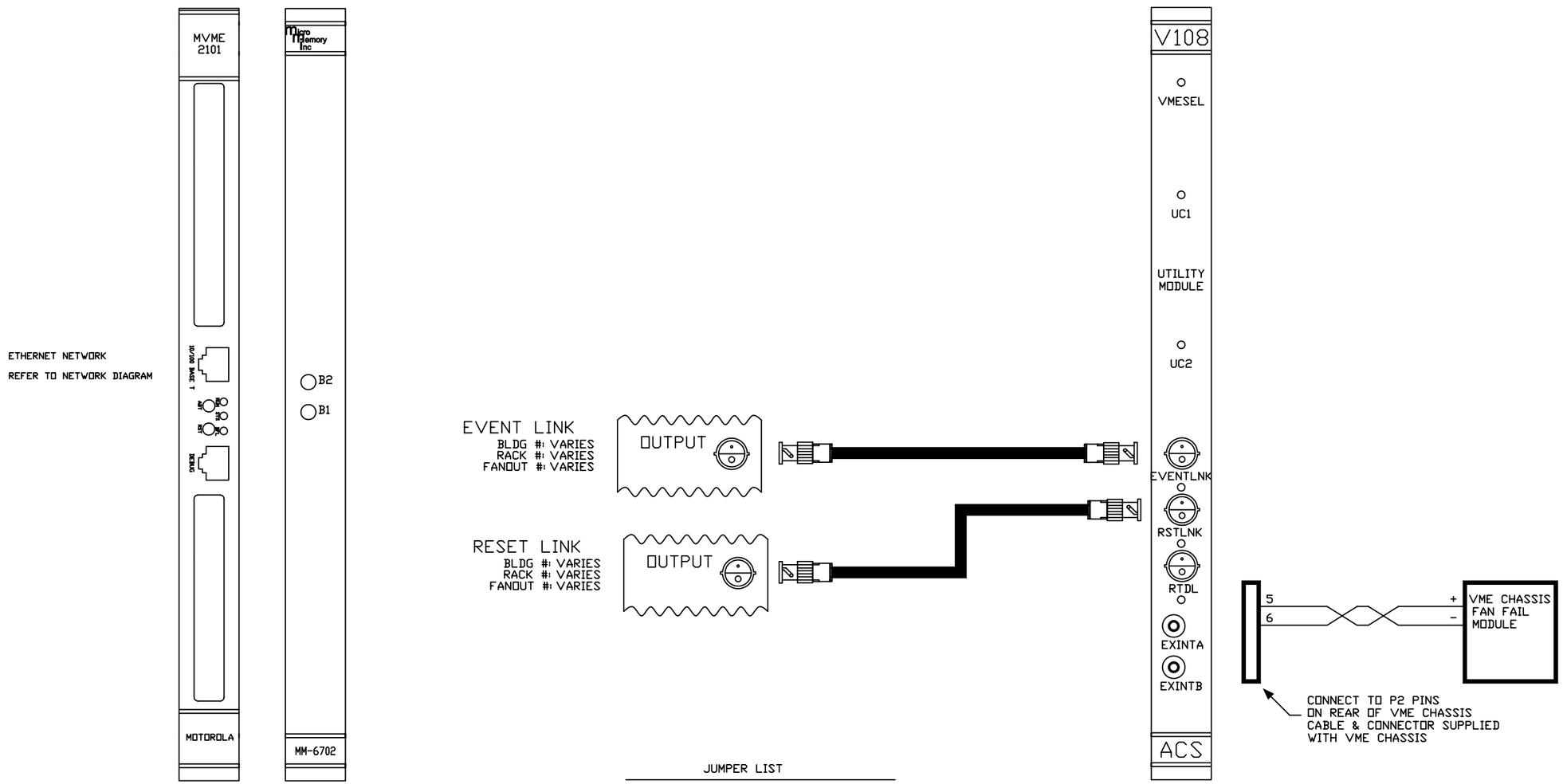

JUMPER LIST

E25 through E50 are configured for remote reset address at the time of board acceptance test.
DO NOT MODIFY!

Remote reset pulls VME SYS Reset.
E58-E60, E59-E61

A24 BASE ADDRESS= 4000h
E57-E13, E2-E14, E3-E15, E4-E16, E5-E17, E6-E18
E7-E19, E8-E20, E9-E21, E10-E22, E11-E24, E57-E23
SW1=OPEN
SW2=CLOSED
SW3=OPEN
SW4=OPEN

-3	-2	-1	REF DESIGNATOR	ITEM NO.	DESCRIPTION	MAT'L DWG NO.,BNL NO.
QTY REQD						

INTERPRET IN GENERAL ACCORDANCE WITH ASME Y14.24M-1989	Q.A. CATEGORY A-3	DATE	BROOKHAVEN NATIONAL LABORATORY	
	DRAWN BY PAPE	05/30/02	UPTON, N.Y. 11973	
UNLESS OTHERWISE SPECIFIED DIMENSIONS ARE IN INCHES	CHECKED BY		CA- CONTROLS	
DECIMAL TOLERANCES .X ±.030 .XX ±.015 .XXX ±.005 ANGULAR TOLERANCE ± .5°	DESIGN APPROVAL		TYPICAL BAF	
	ENGINEER APPROVAL		FT END COMP/V108 UTIL MODULE	
	SUPVR. APPROVAL		SIZE D	Drawing Number (DRAWING NUMBER) REV. A
NA FINISH	BREAK SHARP EDGES MAX. XX MIN. XX	NEXT ASSEMBLY		
OUTSTANDING ECN			MATERIAL: —	SCALE: FULL WEIGHT: - SHEET 1 OF 1

*AUTOCAD