REV.	ZONE	ECN NO.	DATE	BY	CKR	APP.

CURRENT INSTALLATION WILL BE REMOVED AND CONFIGURED AS SHOWN IN THE FOLLOWING PAGES AT A LATER DATE

Phil Pape, Controls Division 5/29/2002 4:04 PM EVENT_RESET.dwg

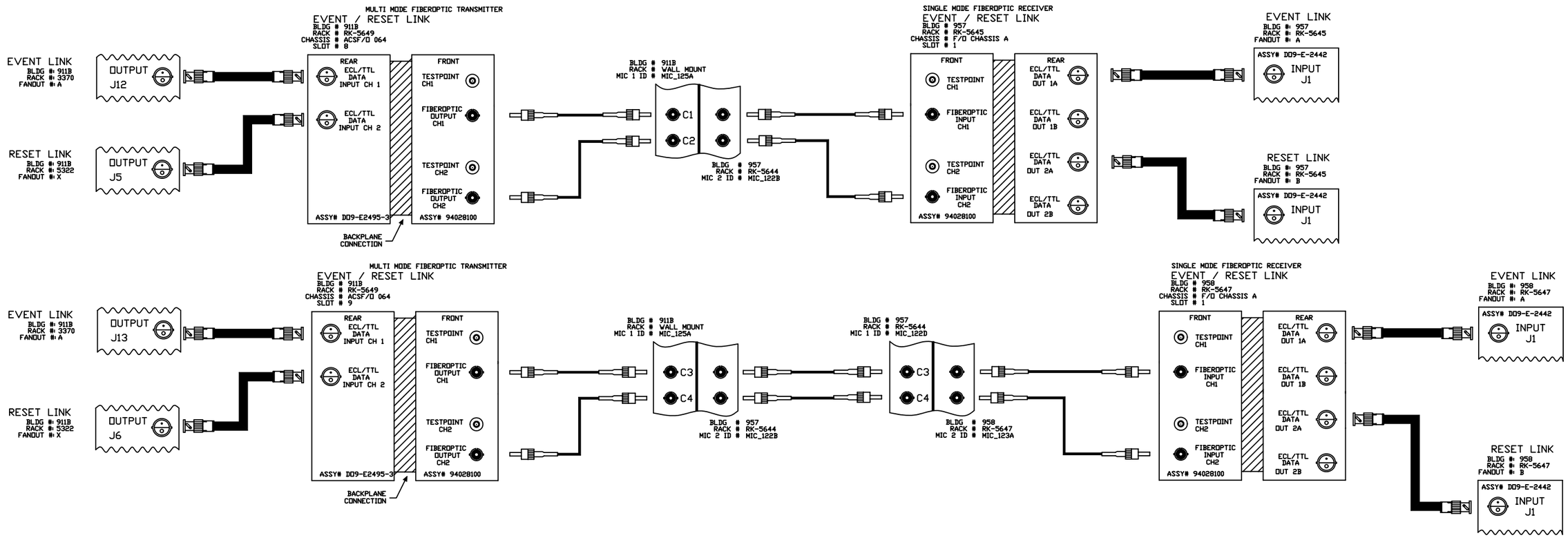

-3	-2	-1	REF DESIGNATOR	ITEM NO.	DESCRIPTION	MAT'L DWG NO.,BNL NO.
QTY REQD						

INTERPRET IN GENERAL ACCORDANCE WITH ASME Y14.24M-1989

UNLESS OTHERWISE SPECIFIED DIMENSIONS ARE IN INCHES

DECIMAL TOLERANCES
.X ±.030
.XX ±.015
.XXX ±.005
ANGULAR TOLERANCE ± .5°

NA FINISH

BREAK SHARP EDGES MAX. XX MIN. XX

OUTSTANDING ECN

Q.A. CATEGORY A-3

		DATE
DRAWN BY	PAPE	05/29/02
CHECKED BY		
DESIGN APPROVAL		
ENGINEER APPROVAL		
SUPVR. APPROVAL		

NEXT ASSEMBLY

BROOKHAVEN NATIONAL LABORATORY
UPTON, N.Y. 11973

C-A CONTROLS

BAF WIRING DIAGRAM

EVENT / RESET LINK

SIZE D

Drawing Number
DRAWING NUMBER

REV. A

MATERIAL: ——— SCALE: FULL WEIGHT: – SHEET 1 OF 1

*AUTOCAD