RHIC Accelerator Controls Section
Alcove 1009A Wiring Diagrams
BNL Drawing Number 94028685

Brookhaven National Laboratory, Upton, New York 11973

Created By: Ed Koropsak
Last Updated 6/17/03

Power Distribution
- Rack R09A08 (Sheet 1)
- Rack R09A09, Rack R09A10 (Sheet 2)

Spares
- Spare Fiber Optic Receiver/Transmitter Channels (Sheet 3)
- 4122 Analog Outputs (Sheet 3)
- Spare MADC Channels (Sheet 54)

Serial Links
- Event Link (Sheet 4,5)
- Real Time Data Link (RTDL) (Sheet 6,7)
- Reset Link (Sheet 8)
- Beam Sync Yellow Link (Sheet 9)
- Beam Sync Blue Link (Sheet 10)

VME Chassis CFE-9A-PS1 modules
- CPU, Memory Board, V108 Utility Module (Sheet 11)
- V113/V114 MADC System (Sheet 12)
- V115 WFG A: bi8-tv4, bi8-th5 (Sheet 13)
- V115 WFG B: bi8-tv6, bi8-th7 (Sheet 14)
- V115 WFG C: bi8-tv8, bi8-th9 (Sheet 15)
- V115 WFG D: bi8-tv10, bi8-th11 (Sheet 16)
- V115 WFG E: bi8-tv12, bi8-th13 (Sheet 17)
- V115 WFG F: bi8-tv14, bi8-qs-ps (Sheet 18)
- V115 WFG G: bi8-octf-ps, bi8-octd-ps (Sheet 19)
- V115 WFG H: bi8-qgt-ps, bi8-tv2 (Sheet 20)
- V115 WFG I: bi8-qs3, bi8-th3 (Sheet 21)
- V115 WFG J: bi8-oct2, bi8-dec2 (Sheet 22)
- 4122 Gamma Transition Ref. Voltage (Sheet 53)

NOTE: Sheets 47, 49, 50 are Blank

VME Chassis CFE-9A-PS3 modules
- CPU, Memory Board, Utility Module (Sheet 45)
- V113/V114 MADC System (Sheet 46)
- (Sheet 47)
- V102 Delay Module A - Event Link (Sheet 48)
- V120 Permit Module (Sheet 51)
- Permit System Interface Panel (Sheet 52)
- V115 WFG A: bi8-dod2, bi8-sx3 (Sheet 23)
- V115 WFG B: bi8-oct3, bi8-dod3 (Sheet 24)
- V115 WFG C: bi8-sxs3, bi8-octs3(future) (Sheet 25)
- V115 WFG D: bi8-rot3-1, bi8-rot3-2 (Sheet 26)
- V115 WFG E: bi8-defocdec(future) (Sheet 27)
- V115 WFG F: yo8-dod2, yo8-sx3 (Sheet 40)
- V115 WFG G: yo8-oct3, yo8-dod3 (Sheet 41)
- V115 WFG H: yo8-sxs3, yo8-octs3(future) (Sheet 42)
- V115 WFG I: yo8-rot3-1, yo8-rot3-2 (Sheet 43)
- V115 WFG J: yo8-defocdec(future) (Sheet 44)

VME Chassis CFE-9A-PS2 modules
- CPU, Memory Board, V108 Utility Module (Sheet 28)
- V113/V114 MADC System (Sheet 29)
- V115 WFG A: yo8-th4, yo8-tv5 (Sheet 30)
- V115 WFG B: yo8-th6, yo8-tv7 (Sheet 31)
- V115 WFG C: yo8-th8, yo8-tv9 (Sheet 32)
- V115 WFG D: yo8-th10, yo8-tv11 (Sheet 33)
- V115 WFG E: yo8-th12, yo8-tv13 (Sheet 34)
- V115 WFG F: yo8-th14, yo8-qs-ps (Sheet 35)
- V115 WFG G: yo8-octf-ps, yo8-octd-ps (Sheet 36)
- V115 WFG H: yo8-qgt-ps, yo8-th2 (Sheet 37)
- V115 WFG I: yo8-qs3, yo8-tv3 (Sheet 38)
- V115 WFG J: yo8-oct2, yo8-dec2 (Sheet 39)

REV.	ZONE	ECN NO.	DATE	BY	CKR	APP.

CONTROLS- 6/2/03 11:53 AM 8685_01.dwg

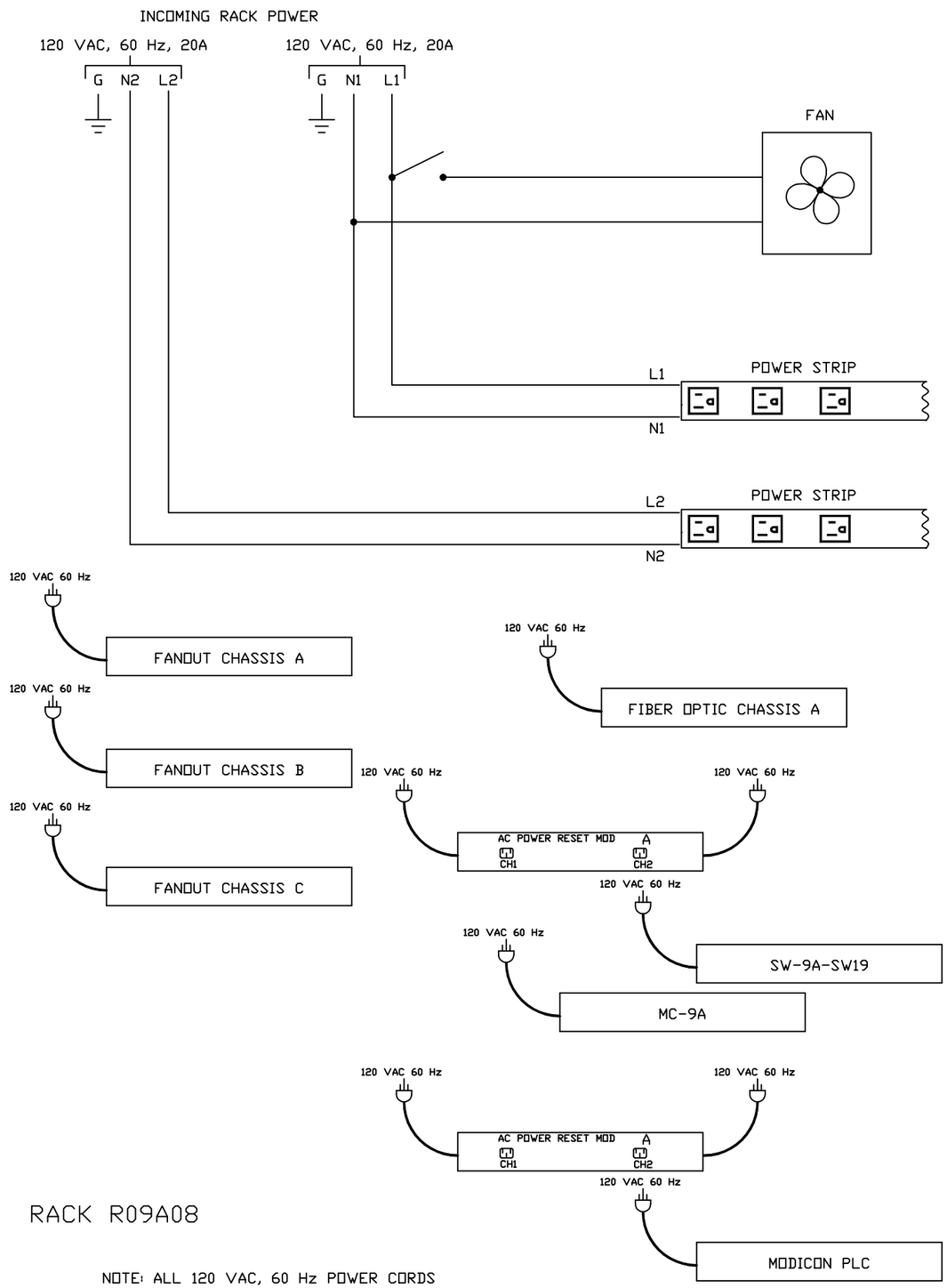

-3	-2	-1	REF DESIGNATOR	ITEM NO.	DESCRIPTION	MAT'L. DWG NO.,BNL NO.
		150		11	CABLE ASSY, POWER SUPPLY TO MADC A/D I/O PANEL (3 CABLES/PS)	
		50		10	CABLE ASSY, LOW RES PS IF MODULE TO POWER SUPPLY	
		1		9	PERMIT SYSTEM INTERFACE CABLE, T120 TO PERMIT SYSTEM INTERFACE PANEL	D09-E2225-2
		33		8	SERIAL LINK TWINAX CABLE, LENGTH AS REQUIRED	94028176
		52		7	SERIAL LINK TWINAX CABLE, 1 FT	94028176
		50		6	DUPLEX MULTIMODE FIBER OPTIC CABLE, T115 TO LOW RES PS INTERFACE MODULE	94028249
		13		5	SINGLE MODE FIBER OPTIC CABLE	94028251
		12		4	MADC A/D I/O CABLE	94028216
		27		3	TRANSITION MODULE P2 RIBBON CABLE, V115, V120	94028159
		3		2	MADC V113 TO V114 P2 INTERFACE RIBBON CABLE	94028218
		3		1	NETWORK CABLE TO FEC	

QTY REQD

INTERPRET IN GENERAL ACCORDANCE WITH ASME Y14.24M-1989

UNLESS OTHERWISE SPECIFIED DIMENSIONS ARE IN INCHES

DECIMAL TOLERANCES
.X ±.030
.XX ±.015
.XXX ±.005
ANGULAR TOLERANCE ± .5°

OUTSTANDING ECN

NA FINISH

BREAK SHARP EDGES
MAX. XX MIN. XX

Q.A. CATEGORY A-3		DATE	
DRAWN BY	Ed Koropsak	3/9/98	
CHECKED BY			
DESIGN APPROVAL			
ENGINEER APPROVAL	R. MICHNOFF	3/9/98	
SUPVR. APPROVAL			

NEXT ASSEMBLY

BROOKHAVEN NATIONAL LABORATORY
UPTON, N.Y. 11973

RHIC CONTROLS WIRING DIAGRAM
ALCOVE 1009A, RACK R09A08
POWER DISTRIBUTION

SIZE D | DRAWING NUMBER 94028685 | REV. A

MATERIAL: ——— | SCALE: NA | WEIGHT: – | SHEET 1

*AUTOCAD

REV.	ZONE	ECN NO.	DATE	BY	CKR	APP.

ACS, BNL 8/24/00 2:19 PM 8685_02.dwg

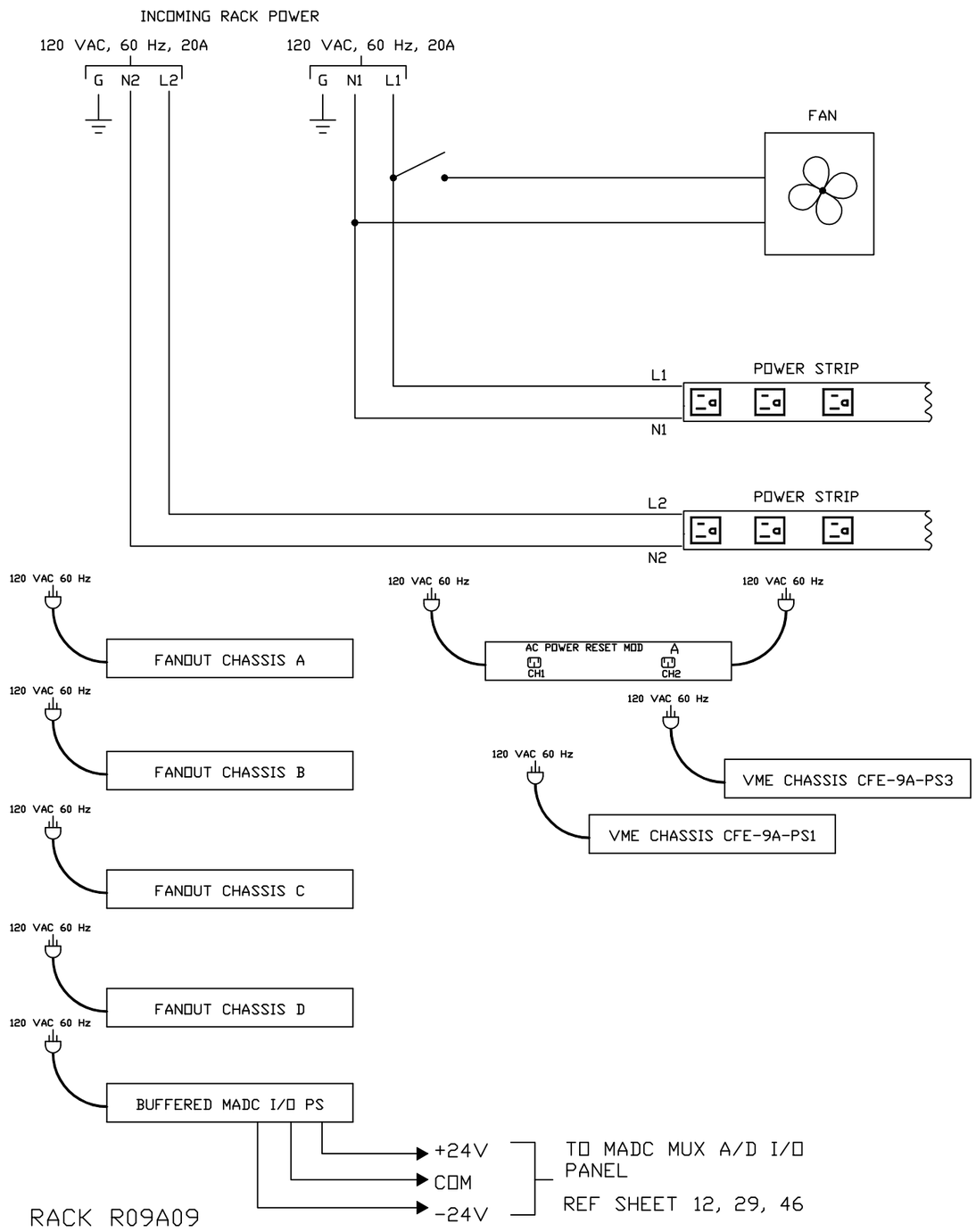

NOTE: ALL 120 VAC, 60 Hz POWER CORDS
PLUG INTO POWER STRIP OUTLETS EXCEPT FOR 6U VME CHASSIS

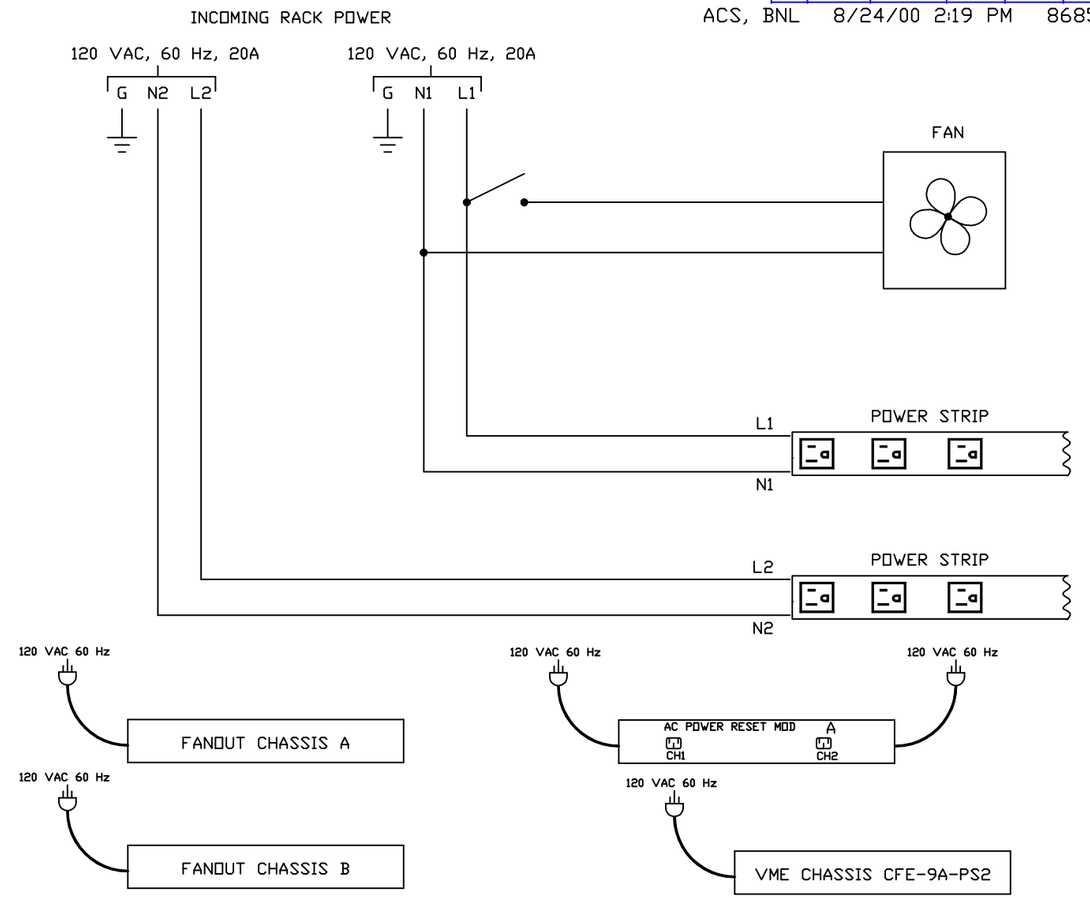

NOTE: ALL 120 VAC, 60 Hz POWER CORDS
PLUG INTO POWER STRIP OUTLETS EXCEPT FOR 6U VME CHASSIS

-3	-2	-1	REF DESIGNATOR	ITEM NO.	DESCRIPTION	MAT'L DWG NO.,BNL NO.
QTY REQD						

INTERPRET IN GENERAL ACCORDANCE WITH ASME Y14.24M-1989	Q.A. CATEGORY A-3	DATE	BROOKHAVEN NATIONAL LABORATORY UPTON, N.Y. 11973
	DRAWN BY Venegas	8/12/99	
UNLESS OTHERWISE SPECIFIED DIMENSIONS ARE IN INCHES	CHECKED BY		RHIC CONTROLS WIRING DIAGRAM
DECIMAL TOLERANCES .X ±.030 .XX ±.015 .XXX ±.005 ANGULAR TOLERANCE ± .5°	DESIGN APPROVAL		ALCOVE 1009A RACK R09A09, R09A10
	ENGINEER APPROVAL R. MICHNOFF	10/29/97	POWER DISTRIBUTION
	SUPVR. APPROVAL		SIZE D — DRAWING NUMBER 94028685 — REV. A
OUTSTANDING ECN — NA FINISH — BREAK SHARP EDGES MAX. XX MIN. XX	NEXT ASSEMBLY		MATERIAL: — SCALE: NA WEIGHT: — SHEET 2 OF X

*AUTOCAD

REV.	ZONE	ECN NO.	DATE	BY	CKR	APP.

ACS, BNL 12/3/99 2:09 PM 8685_03.dwg

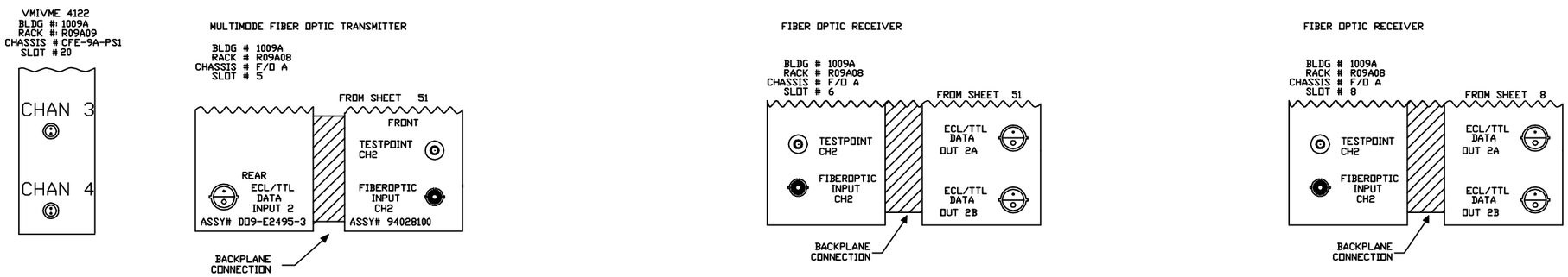

-3	-2	-1	REF DESIGNATOR	ITEM NO.	DESCRIPTION	MAT'L DWG NO.,BNL NO.
QTY REQD						

INTERPRET IN GENERAL ACCORDANCE WITH ASME Y14.24M-1989

UNLESS OTHERWISE SPECIFIED DIMENSIONS ARE IN INCHES

DECIMAL TOLERANCES
.X ±.030
.XX ±.015
.XXX ±.005
ANGULAR TOLERANCE
± .5°

NA FINISH

BREAK SHARP EDGES
MAX. XX MIN. XX

OUTSTANDING ECN

Q.A. CATEGORY A-3		DATE
DRAWN BY	Ed Koropsak	3/9/98
CHECKED BY		
DESIGN APPROVAL		
ENGINEER APPROVAL	R. MICHNOFF	3/9/98
SUPVR. APPROVAL		

NEXT ASSEMBLY

BROOKHAVEN NATIONAL LABORATORY
UPTON, N.Y. 11973

RHIC CONTROLS WIRING DIAGRAM
ALCOVE 1009A
SPARE F/O RCVR/XMIT CHANNELS

SIZE D | DRAWING NUMBER 94028685 | REV. A

MATERIAL: ——— | SCALE: NA | WEIGHT: – | SHEET 3 OF 53

*AUTOCAD

REV.	ZONE	ECN NO.	DATE	BY	CKR	APP.

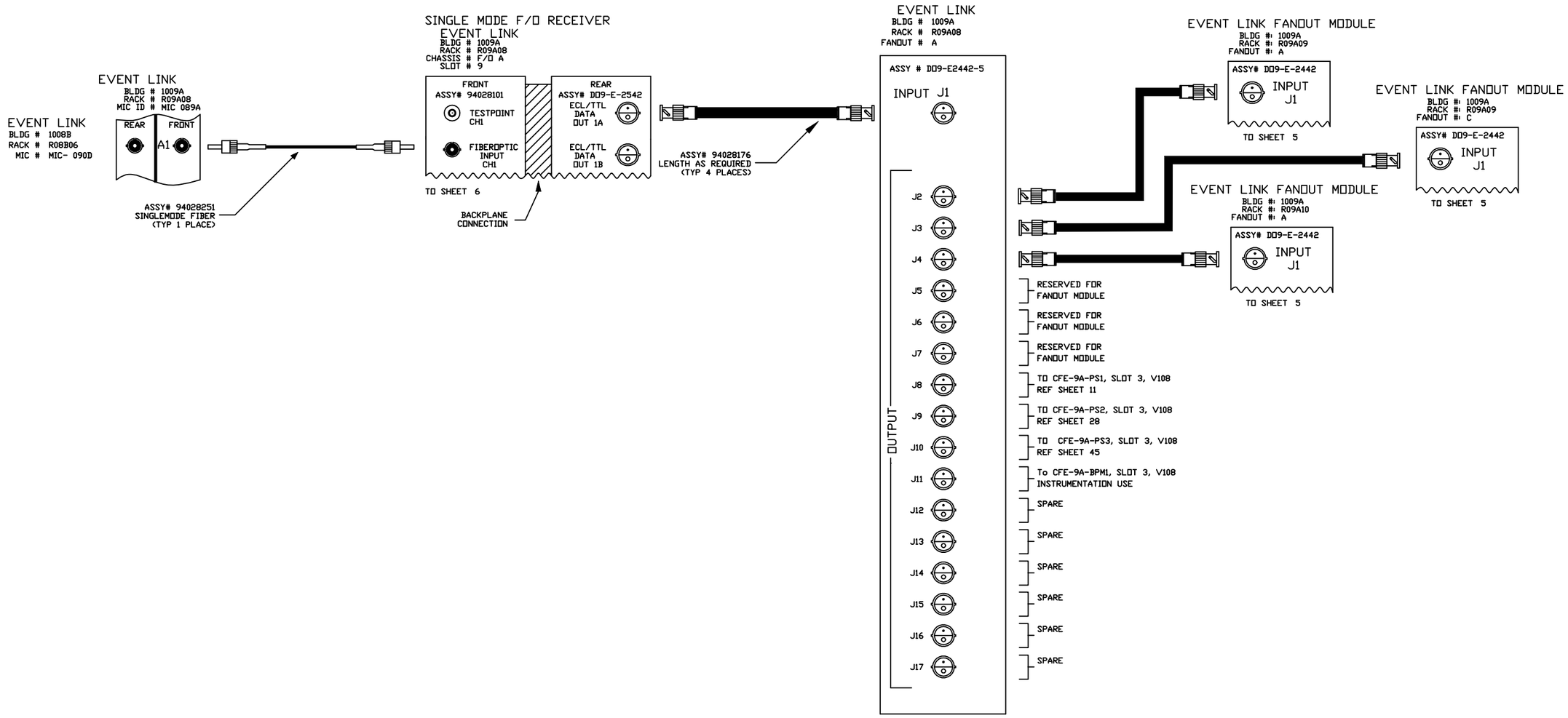

-3	-2	-1	REF DESIGNATOR	ITEM NO.	DESCRIPTION	MAT'L. DWG NO./INL NO.
QTY REQD						

INTERPRET IN GENERAL ACCORDANCE WITH ASME Y14.24M-1989

UNLESS OTHERWISE SPECIFIED DIMENSIONS ARE IN INCHES

DECIMAL TOLERANCES
.X ±.030
.XX ±.015
.XXX ±.005
ANGULAR TOLERANCE
± .5°

NA FINISH

BREAK SHARP EDGES
MAX. XX MIN. XX

OUTSTANDING ECN

Q.A. CATEGORY A-3		DATE
DRAWN BY	Ed Koropsak	3/9/98
CHECKED BY		
DESIGN APPROVAL		
ENGINEER APPROVAL	R. MICHNOFF	3/9/98
SUPVR. APPROVAL		

NEXT ASSEMBLY

BROOKHAVEN NATIONAL LABORATORY
ASSOCIATED UNIVERSITIES, INC.
UPTON, N.Y. 11973

RHIC CONTROLS WIRING DIAGRAM
ALCOVE 1009A
EVENT LINK

SIZE D | DRAWING NUMBER 94028685 | REV. A

MATERIAL: ——— SCALE: NA WEIGHT: – SHEET 4 OF 52

*AUTOCAD

REV.	ZONE	ECN NO.	DATE	BY	CKR	APP.

CONTROLS- 3/2/01 9:13 AM 8685_05.dwg

EVENT LINK FANOUT MODULE

BLDG # 1009A
RACK # R09A09
FANOUT # A

FROM SHEET 4
ASSY # DD9-E2442-5

OUTPUT

J2	SPARE
J3	SPARE
J4	SPARE
J5	SPARE
J6	SPARE
J7	SPARE
J8	To CFE-9A-PS1, SLOT 15, T115 REF SHEET 22
J9	To CFE-9A-PS1, SLOT 14, T115 REF SHEET 21
J10	To CFE-9A-PS1, SLOT 13, T115 REF SHEET 20
J11	To CFE-9A-PS1, SLOT 12, T115 REF SHEET 19
J12	To CFE-9A-PS1, SLOT 11, T115 REF SHEET 18
J13	To CFE-9A-PS1, SLOT 10, T115 REF SHEET 17
J14	To CFE-9A-PS1, SLOT 9, T115 REF SHEET 16
J15	To CFE-9A-PS1, SLOT 8, T115 REF SHEET 15
J16	To CFE-9A-PS1, SLOT 7, T115 REF SHEET 14
J17	To CFE-9A-PS1, SLOT 6, T115 REF SHEET 13

EVENT LINK FANOUT MODULE

BLDG # 1009A
RACK # R09A09
FANOUT # C

FROM SHEET 4
ASSY # DD9-E2442-5

OUTPUT

J2	To CFE-9A-PS3, SLOT 21, V120 REF SHEET 51
J3	SPARE
J4	To CFE-9A-PS3, SLOT 17, T115 REF SHEET 44
J5	To CFE-9A-PS3, SLOT 16, T115 REF SHEET 43
J6	To CFE-9A-PS3, SLOT 15, T115 REF SHEET 42
J7	To CFE-9A-PS3, SLOT 14, T115 REF SHEET 41
J8	To CFE-9A-PS3, SLOT 13, T115 REF SHEET 40
J9	To CFE-9A-PS3, SLOT 12, T115 REF SHEET 27
J10	To CFE-9A-PS3, SLOT 11, T115 REF SHEET 26
J11	To CFE-9A-PS3, SLOT 10, T115 REF SHEET 25
J12	To CFE-9A-PS3, SLOT 9, T115 REF SHEET 24
J13	To CFE-9A-PS3, SLOT 8, T115 REF SHEET 23
J14	To CFE-9A-PS3, SLOT 7, V102 REF SHEET 48
J15	To CFE-9A-PS3, SLOT 4, V113 REF SHEET 46
J16	To CFE-9A-PS2, SLOT 4, V113 REF SHEET 29
J17	To CFE-9A-PS1, SLOT 4, V113 REF SHEET 12

EVENT LINK FANOUT MODULE

BLDG # 1009A
RACK # R09A10
FANOUT # A

FROM SHEET 4
ASSY # DD9-E2442-5

OUTPUT

J2	SPARE
J3	SPARE
J4	SPARE
J5	SPARE
J6	SPARE
J7	SPARE
J8	To CFE-9A-PS2, SLOT 15, T115 REF SHEET 39
J9	To CFE-9A-PS2, SLOT 14, T115 REF SHEET 38
J10	To CFE-9A-PS2, SLOT 13, T115 REF SHEET 37
J11	To CFE-9A-PS2, SLOT 12, T115 REF SHEET 36
J12	To CFE-9A-PS2, SLOT 11, T115 REF SHEET 35
J13	To CFE-9A-PS2, SLOT 10, T115 REF SHEET 34
J14	To CFE-9A-PS2, SLOT 9, T115 REF SHEET 33
J15	To CFE-9A-PS2, SLOT 8, T115 REF SHEET 32
J16	To CFE-9A-PS2, SLOT 7, T115 REF SHEET 31
J17	To CFE-9A-PS2, SLOT 6, T115 REF SHEET 30

-3	-2	-1	REF DESIGNATOR	ITEM NO.	DESCRIPTION	MAT'L. DWG NO.,BINL NO.
QTY REQD						

INTERPRET IN GENERAL ACCORDANCE WITH ASME Y14.24M-1989

UNLESS OTHERWISE SPECIFIED DIMENSIONS ARE IN INCHES

DECIMAL TOLERANCES
.X ±.030
.XX ±.015
.XXX ±.005
ANGULAR TOLERANCE ± .5°

OUTSTANDING ECN

NA FINISH

BREAK SHARP EDGES MAX. XX MIN. XX

Q.A. CATEGORY A-3		DATE
DRAWN BY	Ed Koropsak	3/9/98
CHECKED BY		
DESIGN APPROVAL		
ENGINEER APPROVAL	R. MICHNOFF	3/9/98
SUPVR. APPROVAL		

NEXT ASSEMBLY

BROOKHAVEN NATIONAL LABORATORY
UPTON, N.Y. 11973

RHIC CONTROLS WIRING DIAGRAM
ALCOVE 1009A
EVENT LINK

SIZE D
94028685
DRAWING NUMBER
REV. A

MATERIAL: ——— SCALE: NA WEIGHT: – SHEET 5 OF 53

*AUTOCAD

REV.	ZONE	ECN NO.	DATE	BY	CKR	APP.

Controls 8/12/99 1:50 PM 8685_06.dwg

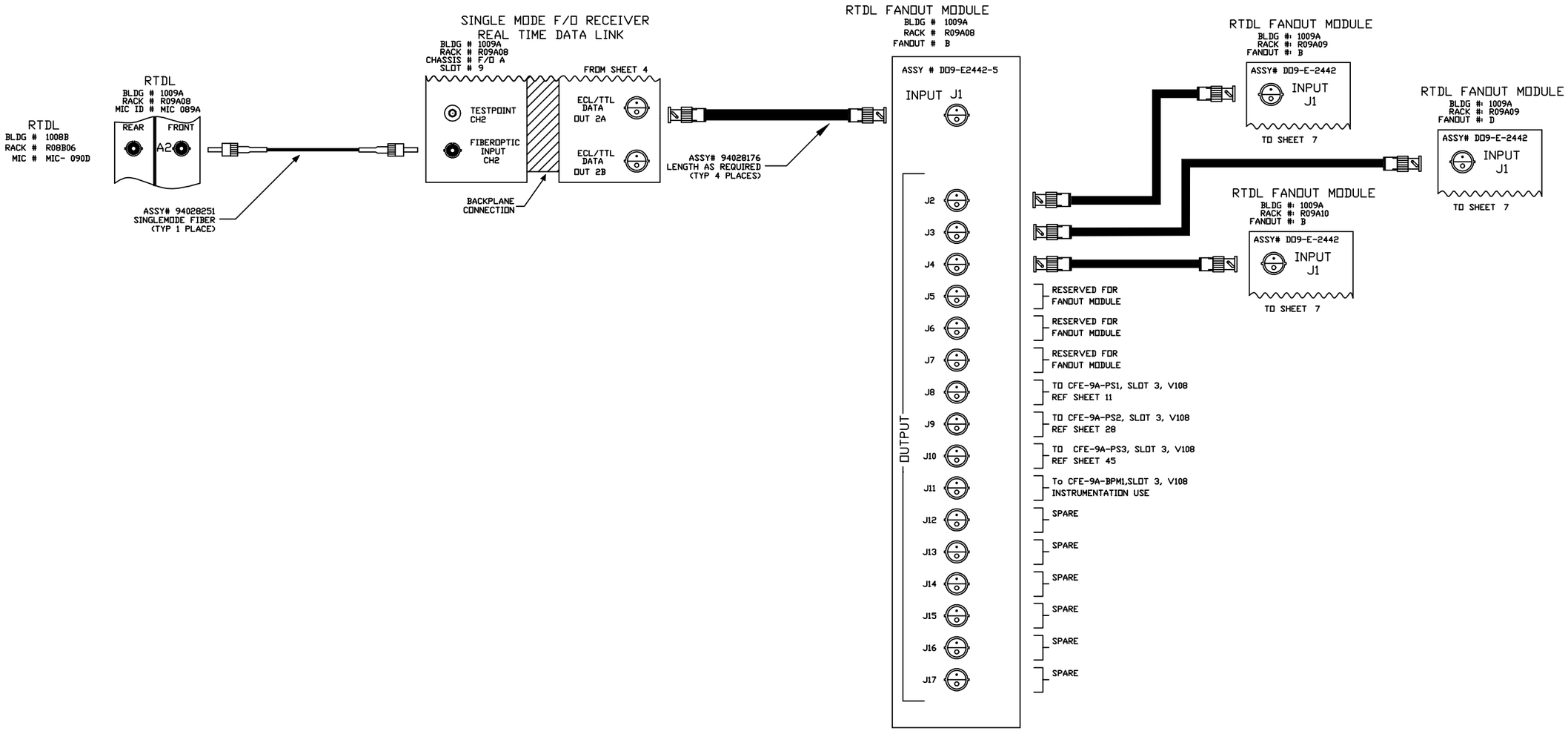

-3	-2	-1	REF DESIGNATOR	ITEM NO.	DESCRIPTION	MAT'L. DWG NO./INL NO.
QTY REQD						

INTERPRET IN GENERAL ACCORDANCE WITH ASME Y14.24M-1989

UNLESS OTHERWISE SPECIFIED DIMENSIONS ARE IN INCHES

DECIMAL TOLERANCES
.X ±.030
.XX ±.015
.XXX ±.005
ANGULAR TOLERANCE
± .5°

NA FINISH

BREAK SHARP EDGES
MAX. XX MIN. XX

OUTSTANDING ECN

Q.A. CATEGORY A-3		DATE
DRAWN BY	Ed Koropsak	3/9/98
CHECKED BY		
DESIGN APPROVAL		
ENGINEER APPROVAL	R. MICHNOFF	3/9/98
SUPVR. APPROVAL		

NEXT ASSEMBLY

BROOKHAVEN NATIONAL LABORATORY
ASSOCIATED UNIVERSITIES, INC.
UPTON, N.Y. 11973

RHIC CONTROLS WIRING DIAGRAM

ALCOVE 1009A

REAL TIME DATA LINK

SIZE D | DRAWING NUMBER 94028685 | REV. A

MATERIAL: ——— SCALE: NA WEIGHT: – SHEET 6 OF 52

*AUTOCAD

REV.	ZONE	ECN NO.	DATE	BY	CKR	APP.

CONTROLS- 3/2/01 9:18 AM 8685_07.dwg

RTDL FANOUT MODULE

BLDG # 1009A
RACK # R09A09
FANOUT # B

FROM SHEET 6

ASSY # DD9-E2442-5

OUTPUT

J2	SPARE
J3	SPARE
J4	SPARE
J5	SPARE
J6	SPARE
J7	SPARE
J8	To CFE-9A-PS1, SLOT 15, T115 REF SHEET 22
J9	To CFE-9A-PS1, SLOT 14, T115 REF SHEET 21
J10	To CFE-9A-PS1, SLOT 13, T115 REF SHEET 20
J11	To CFE-9A-PS1, SLOT 12, T115 REF SHEET 19
J12	To CFE-9A-PS1, SLOT 11, T115 REF SHEET 18
J13	To CFE-9A-PS1, SLOT 10, T115 REF SHEET 17
J14	To CFE-9A-PS1, SLOT 9, T115 REF SHEET 16
J15	To CFE-9A-PS1, SLOT 8, T115 REF SHEET 15
J16	To CFE-9A-PS1, SLOT 7, T115 REF SHEET 14
J17	To CFE-9A-PS1, SLOT 6, T115 REF SHEET 13

RTDL FANOUT MODULE

BLDG # 1009A
RACK # R09A09
FANOUT # D

FROM SHEET 6

ASSY # DD9-E2442-5

OUTPUT

J2	SPARE
J3	SPARE
J4	To CFE-9A-PS3, SLOT 17, T115 REF SHEET 44
J5	To CFE-9A-PS3, SLOT 16, T115 REF SHEET 43
J6	To CFE-9A-PS3, SLOT 15, T115 REF SHEET 42
J7	To CFE-9A-PS3, SLOT 14, T115 REF SHEET 41
J8	To CFE-9A-PS3, SLOT 13, T115 REF SHEET 40
J9	To CFE-9A-PS3, SLOT 12, T115 REF SHEET 27
J10	To CFE-9A-PS3, SLOT 11, T115 REF SHEET 26
J11	To CFE-9A-PS3, SLOT 10, T115 REF SHEET 25
J12	To CFE-9A-PS3, SLOT 9, T115 REF SHEET 24
J13	To CFE-9A-PS3, SLOT 8, T115 REF SHEET 23
J14	SPARE
J15	SPARE
J16	SPARE
J17	SPARE

RTDL FANOUT MODULE

BLDG # 1009A
RACK # R09A10
FANOUT # B

FROM SHEET 6

ASSY # DD9-E2442-5

OUTPUT

J2	SPARE
J3	SPARE
J4	SPARE
J5	SPARE
J6	SPARE
J7	SPARE
J8	To CFE-9A-PS2, SLOT 15, T115 REF SHEET 39
J9	To CFE-9A-PS2, SLOT 14, T115 REF SHEET 38
J10	To CFE-9A-PS2, SLOT 13, T115 REF SHEET 37
J11	To CFE-9A-PS2, SLOT 12, T115 REF SHEET 36
J12	To CFE-9A-PS2, SLOT 11, T115 REF SHEET 35
J13	To CFE-9A-PS2, SLOT 10, T115 REF SHEET 34
J14	To CFE-9A-PS2, SLOT 9, T115 REF SHEET 33
J15	To CFE-9A-PS2, SLOT 8, T115 REF SHEET 32
J16	To CFE-9A-PS2, SLOT 7, T115 REF SHEET 31
J17	To CFE-9A-PS2, SLOT 6, T115 REF SHEET 30

-3	-2	-1	REF DESIGNATOR	ITEM NO.	DESCRIPTION	MAT'L. DWG NO.,BINL NO.
QTY REQD						

INTERPRET IN GENERAL ACCORDANCE WITH ASME Y14.24M-1989

UNLESS OTHERWISE SPECIFIED DIMENSIONS ARE IN INCHES

DECIMAL TOLERANCES
.X ±.030
.XX ±.015
.XXX ±.005
ANGULAR TOLERANCE ± .5°

OUTSTANDING ECN

NA FINISH

BREAK SHARP EDGES MAX. XX MIN. XX

Q.A. CATEGORY A-3		DATE
DRAWN BY	Ed Koropsak	3/9/98
CHECKED BY		
DESIGN APPROVAL		
ENGINEER APPROVAL	R. MICHNOFF	3/9/98
SUPVR. APPROVAL		

NEXT ASSEMBLY

BROOKHAVEN NATIONAL LABORATORY
UPTON, N.Y. 11973

RHIC CONTROLS WIRING DIAGRAM
ALCOVE 1009A

REAL TIME DATA LINK

SIZE D — DRAWING NUMBER 94028685 — REV. A

MATERIAL: ——— SCALE: NA WEIGHT: – SHEET 7 OF 53

*AUTOCAD

REV.	ZONE	ECN NO.	DATE	BY	CKR	APP.

CONTROLS- 3/2/01 9:20 AM 8685_08.dwg

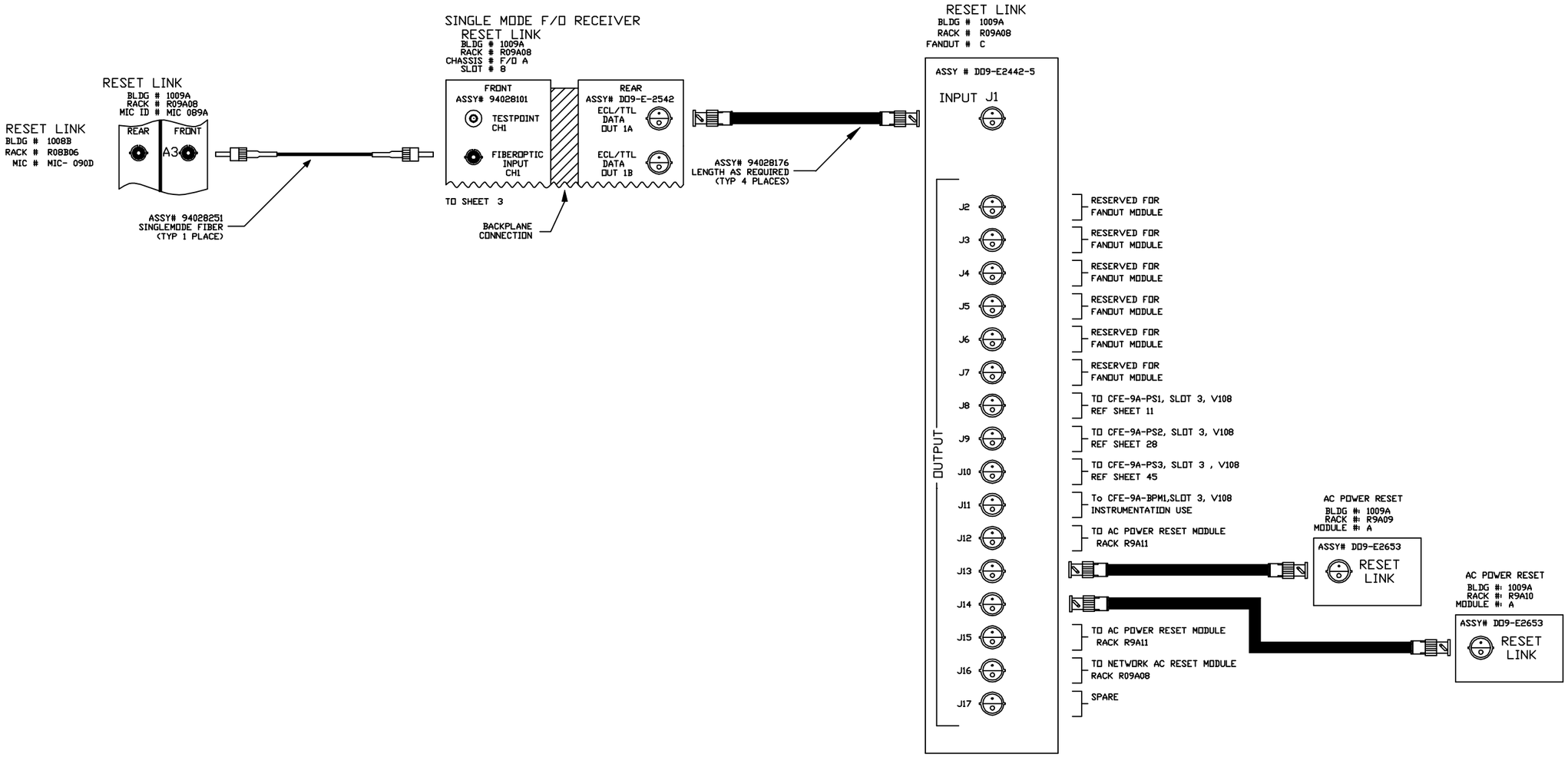

-3	-2	-1	REF DESIGNATOR	ITEM NO.	DESCRIPTION	MAT'L DWG NO.,DWG NO.
QTY REQD						

INTERPRET IN GENERAL ACCORDANCE WITH ASME Y14.24M-1989

UNLESS OTHERWISE SPECIFIED DIMENSIONS ARE IN INCHES

DECIMAL TOLERANCES
.X ±.030
.XX ±.015
.XXX ±.005
ANGULAR TOLERANCE
± .5'

NA FINISH

BREAK SHARP EDGES
MAX. XX MIN. XX

OUTSTANDING ECN

Q.A. CATEGORY A-3		DATE
DRAWN BY	Venegas	8/12/99
CHECKED BY		
DESIGN APPROVAL		
ENGINEER APPROVAL	R. MICHNOFF	10/23/97
SUPVR. APPROVAL		

NEXT ASSEMBLY

BROOKHAVEN NATIONAL LABORATORY
UPTON, N.Y. 11973

RHIC CONTROLS WIRING DIAGRAM

ALCOVE 1009A

RESET LINK

SIZE D | 94028685 DRAWING NUMBER | REV. A

MATERIAL: ——— SCALE: NA WEIGHT: – SHEET 8 OF 53

*AUTOCAD

ACS, BNL 8/24/00 2:20 PM 8685_09.dwg

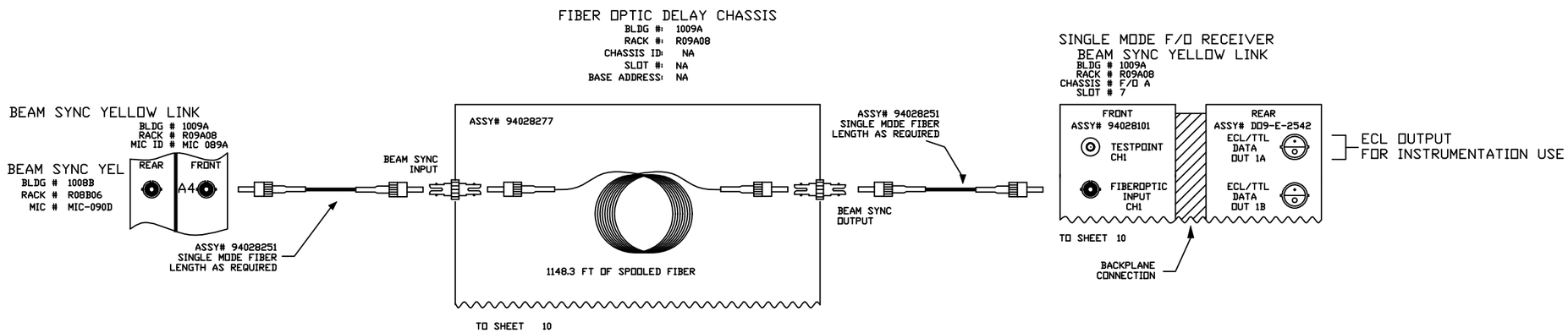

REV.	ZONE	ECN NO.	DATE	BY	CKR	APP.

-3	-2	-1	REF DESIGNATOR	ITEM NO.	DESCRIPTION	MAT'L. DWG NO.,BNL NO.
QTY REQD						

INTERPRET IN GENERAL ACCORDANCE WITH ASME Y14.24M-1989

UNLESS OTHERWISE SPECIFIED DIMENSIONS ARE IN INCHES

DECIMAL TOLERANCES
.X ±.030
.XX ±.015
.XXX ±.005
ANGULAR TOLERANCE
± .5°

NA FINISH

BREAK SHARP EDGES
MAX. XX MIN. XX

OUTSTANDING ECN

Q.A. CATEGORY A-3		DATE	BROOKHAVEN NATIONAL LABORATORY
DRAWN BY	Ed Koropsak	3/9/98	UPTON, N.Y. 11973
CHECKED BY			RHIC CONTROLS WIRING DIAGRAM
DESIGN APPROVAL			ALCOVE 1009A
ENGINEER APPROVAL	R. MICHNOFF	3/9/98	BEAM SYNC YELLOW LINK
SUPVR. APPROVAL			SIZE D — 94028685 — REV. A
NEXT ASSEMBLY			DRAWING NUMBER

MATERIAL: ——— SCALE: NA WEIGHT: – SHEET 9 OF 52

*AUTOCAD

ACS, BNL 8/24/00 2:21 PM 8685_10.dwg

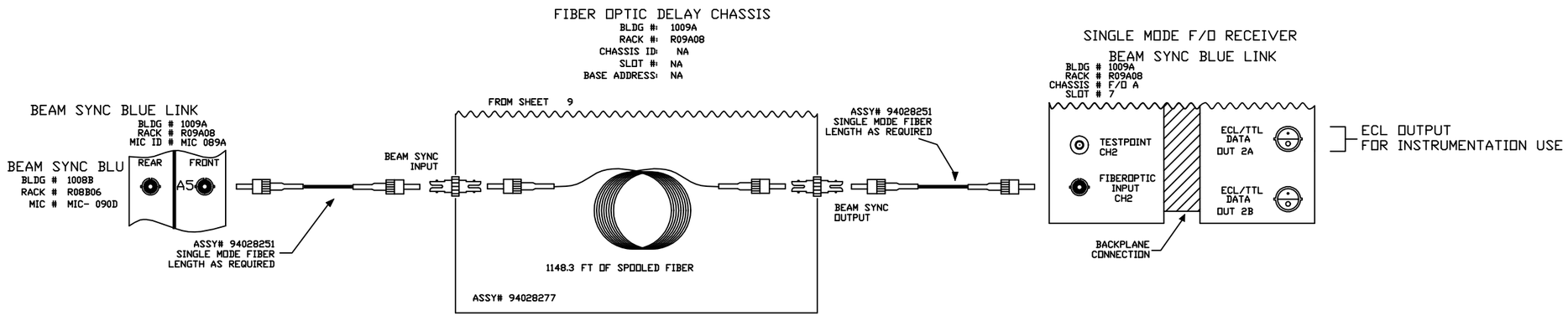

REV.	ZONE	ECN NO.	DATE	BY	CKR	APP.

-3	-2	-1	REF DESIGNATOR	ITEM NO.	DESCRIPTION	MAT'L. DWG NO.,SPEC. NO.
QTY REQD						

INTERPRET IN GENERAL ACCORDANCE WITH ASME Y14.24M-1989

UNLESS OTHERWISE SPECIFIED DIMENSIONS ARE IN INCHES

DECIMAL TOLERANCES
.X ±.030
.XX ±.015
.XXX ±.005
ANGULAR TOLERANCE
± .5°

NA FINISH

BREAK SHARP EDGES
MAX. XX MIN. XX

OUTSTANDING ECN

Q.A. CATEGORY A-3		DATE
DRAWN BY	Ed Koropsak	3/9/98
CHECKED BY		
DESIGN APPROVAL		
ENGINEER APPROVAL	R. MICHNOFF	3/9/98
SUPVR. APPROVAL		
NEXT ASSEMBLY		

BROOKHAVEN NATIONAL LABORATORY
UPTON, N.Y. 11973

RHIC CONTROLS WIRING DIAGRAM
ALCOVE 1009A
BEAM SYNC BLUE LINK

SIZE D | DRAWING NUMBER 94028685 | REV. A

MATERIAL: ——— SCALE: NA WEIGHT: – SHEET 10 OF 52

*AUTOCAD

REV.	ZONE	ECN NO.	DATE	BY	CKR	APP.

CONTROLS- 6/17/03 2:26 PM 8685_11.dwg

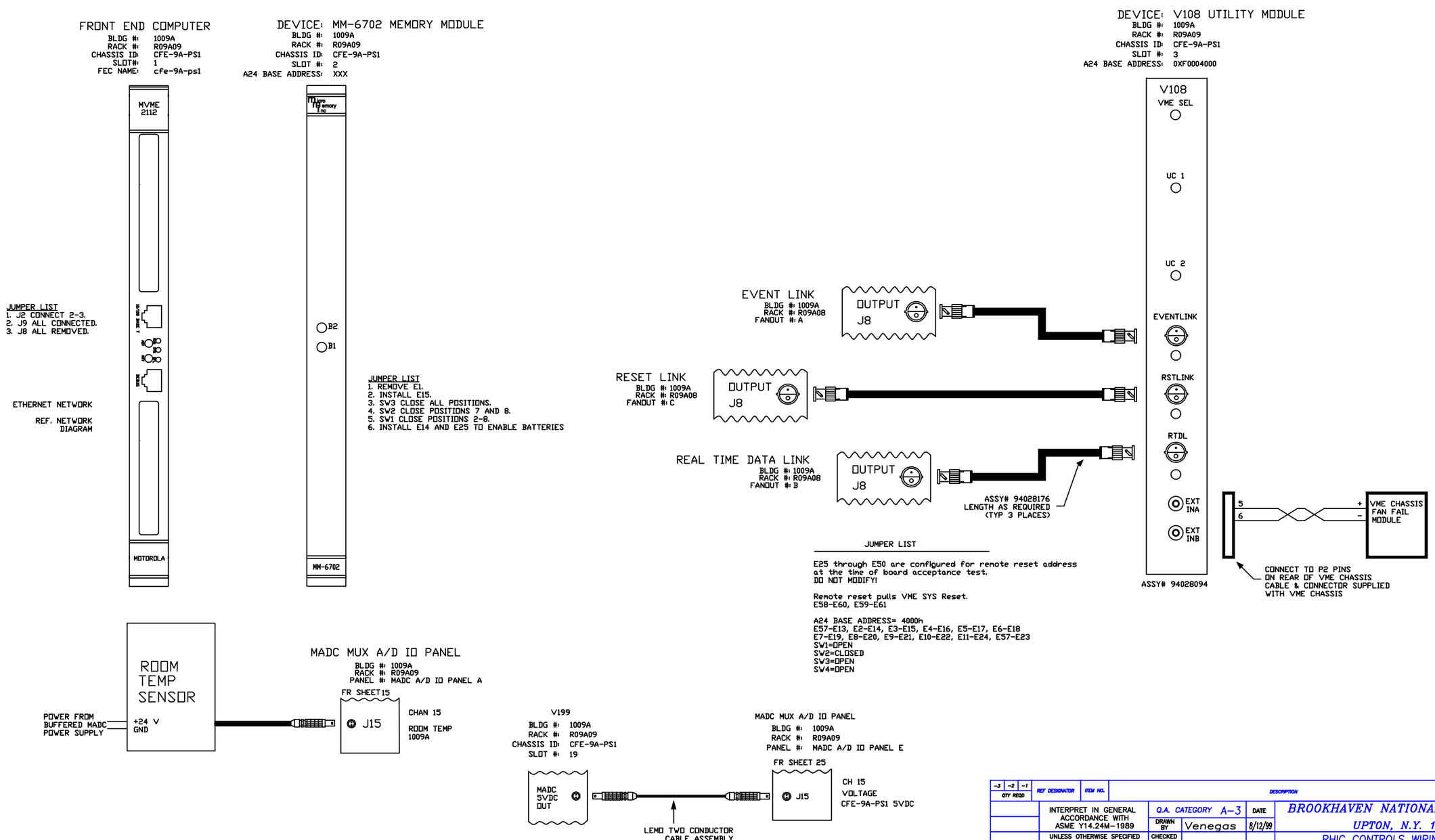

-3	-2	-1	REF DESIGNATOR	ITEM NO.	DESCRIPTION	MAT'L DWG NO./INL NO.
QTY REQD						

INTERPRET IN GENERAL ACCORDANCE WITH ASME Y14.24M-1989

UNLESS OTHERWISE SPECIFIED DIMENSIONS ARE IN INCHES

DECIMAL TOLERANCES
.X ±.030
.XX ±.015
.XXX ±.005
ANGULAR TOLERANCE
± .5°

NA FINISH

BREAK SHARP EDGES
MAX. XX MIN. XX

OUTSTANDING ECN

Q.A. CATEGORY A-3		DATE
DRAWN BY	Venegas	8/12/99
CHECKED BY		
DESIGN APPROVAL		
ENGINEER APPROVAL	R. MICHNOFF	10/21/97
SUPVR. APPROVAL		

NEXT ASSEMBLY

BROOKHAVEN NATIONAL LABORATORY
UPTON, N.Y. 11973

RHIC CONTROLS WIRING DIAGRAM

ALCOVE 1009A, VME CHASSIS CFE-9A-PS1

CPU/MEMORY /V108 UTIL MODULE

SIZE D | DRAWING NUMBER 94028685 | REV. A

MATERIAL: ——— SCALE: NA WEIGHT: – SHEET 11

*AUTOCAD

ACS, BNL 8/24/00 2:47 PM 8685_12.dwg

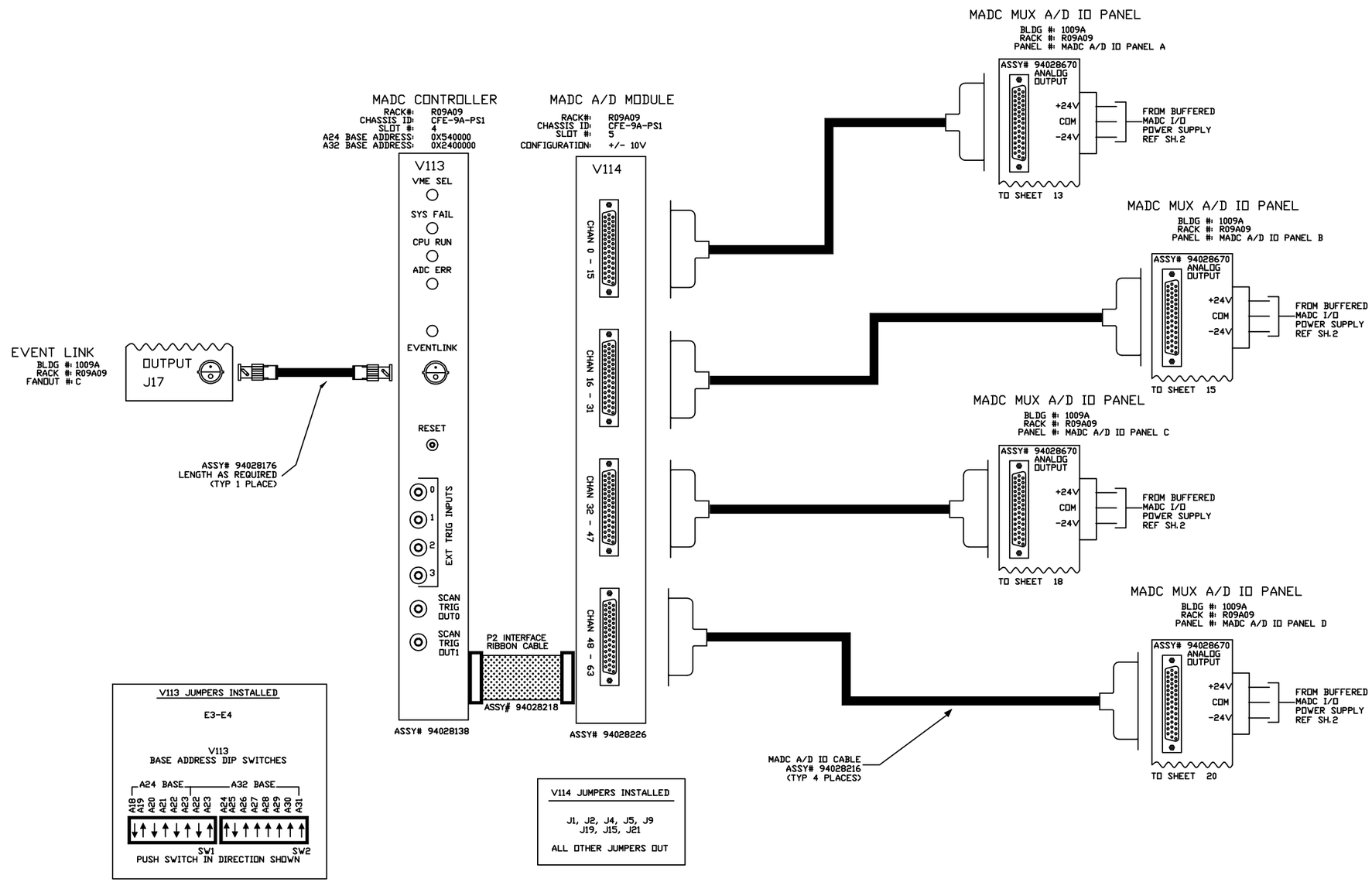

V113 JUMPERS INSTALLED

E3-E4

V113
BASE ADDRESS DIP SWITCHES

PUSH SWITCH IN DIRECTION SHOWN

V114 JUMPERS INSTALLED

J1, J2, J4, J5, J9
J19, J15, J21

ALL OTHER JUMPERS OUT

REV.	ZONE	ECN NO.	DATE	BY	CKR	APP.

-3	-2	-1	REF DESIGNATOR	ITEM NO.	DESCRIPTION	MAT'L DWG NO./BHL NO.
QTY REQD						

INTERPRET IN GENERAL ACCORDANCE WITH ASME Y14.24M-1989

UNLESS OTHERWISE SPECIFIED DIMENSIONS ARE IN INCHES

DECIMAL TOLERANCES
.X ±.030
.XX ±.015
.XXX ±.005
ANGULAR TOLERANCE
± .5°

NA FINISH

BREAK SHARP EDGES
MAX. XX MIN. XX

OUTSTANDING ECN

Q.A. CATEGORY A-3		DATE
DRAWN BY	Ed Koropsak	3/9/98
CHECKED BY		
DESIGN APPROVAL		
ENGINEER APPROVAL	R. MICHNOFF	3/9/98
SUPVR. APPROVAL		

NEXT ASSEMBLY

BROOKHAVEN NATIONAL LABORATORY
UPTON, N.Y. 11973

RHIC CONTROLS WIRING DIAGRAM

ALCOVE 1009A, VME CHASSIS CFE-9A-PS1

MADC SYSTEM

SIZE D | DRAWING NUMBER 94028685 | REV. A

MATERIAL: ——— SCALE: NA WEIGHT: – SHEET 12 OF 52

*AUTOCAD

REV.	ZONE	ECN NO.	DATE	BY	CKR	APP.

CONTROLS- 3/2/01 9:25 AM 8685_13.dwg

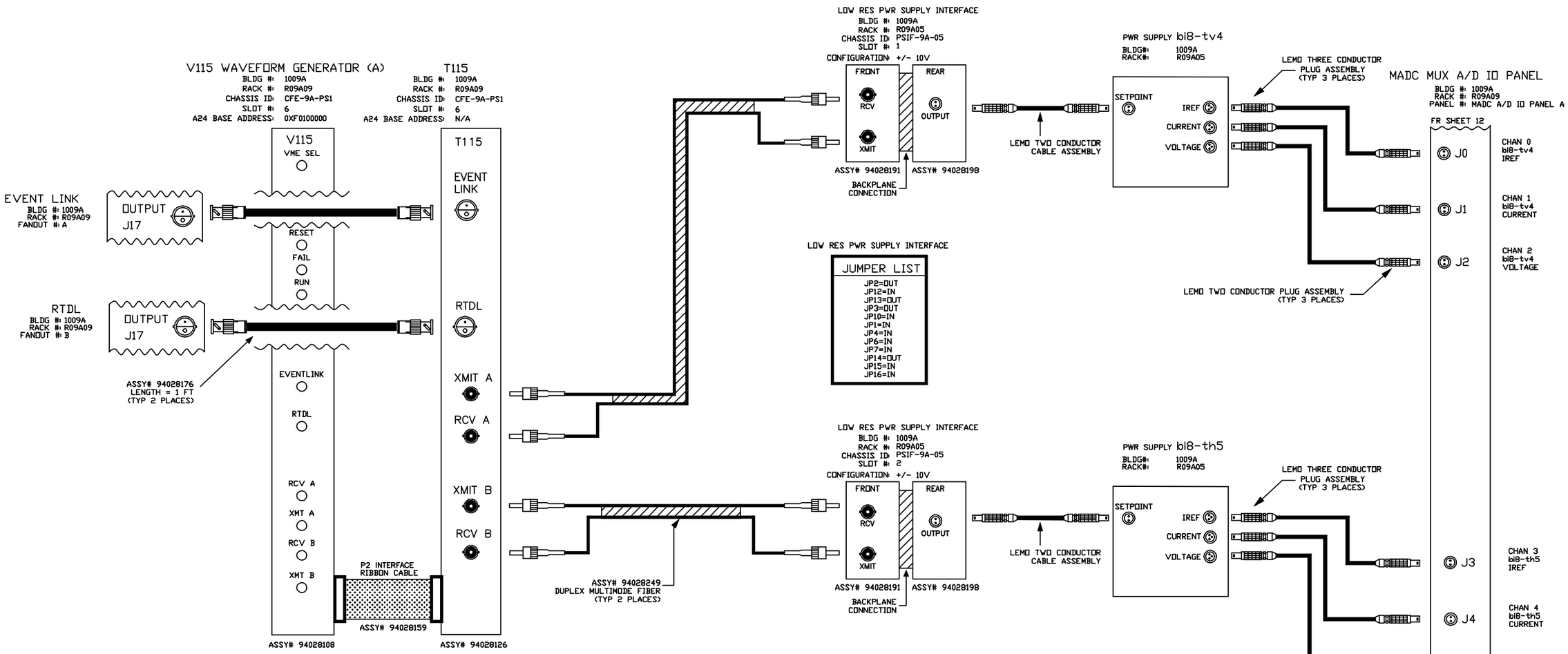

V115 JUMPER LIST
JP3=IN JP4=IN JP1=OUT JP2=OUT
A24 BASE ADDRESS JB1-A23=IN JB1-A22=IN JB1-A21=IN JB1-A20=OUT JB1-A19=IN JB1-A18=IN

-3	-2	-1	REF DESIGNATOR	ITEM NO.	DESCRIPTION	MAT'L DWG NO./BNL NO.
QTY REQD						

INTERPRET IN GENERAL ACCORDANCE WITH ASME Y14.24M-1989	Q.A. CATEGORY A-3	DATE	BROOKHAVEN NATIONAL LABORATORY
	DRAWN BY Ed Koropsak	3/9/98	UPTON, N.Y. 11973
UNLESS OTHERWISE SPECIFIED DIMENSIONS ARE IN INCHES	CHECKED BY		RHIC CONTROLS WIRING DIAGRAM
DECIMAL TOLERANCES .X ±.030 .XX ±.015 .XXX ±.005 ANGULAR TOLERANCE ± .5°	DESIGN APPROVAL		ALCOVE 1009A, CFE-9A-PS1
	ENGINEER APPROVAL R. MICHNOFF	3/9/98	POWER SUPPLY bi8-tv4/bi8-th5
	SUPVR. APPROVAL		SIZE D / DRAWING NUMBER 94028685 / REV. A
OUTSTANDING ECN / NA FINISH	BREAK SHARP EDGES MAX. XX MIN. XX	NEXT ASSEMBLY	MATERIAL: — / SCALE: NA / WEIGHT: — / SHEET 13 OF 53

*AUTOCAD

REV.	ZONE	ECN NO.	DATE	BY	CKR	APP.

CONTROLS- 3/2/01 9:29 AM 8685_14.dwg

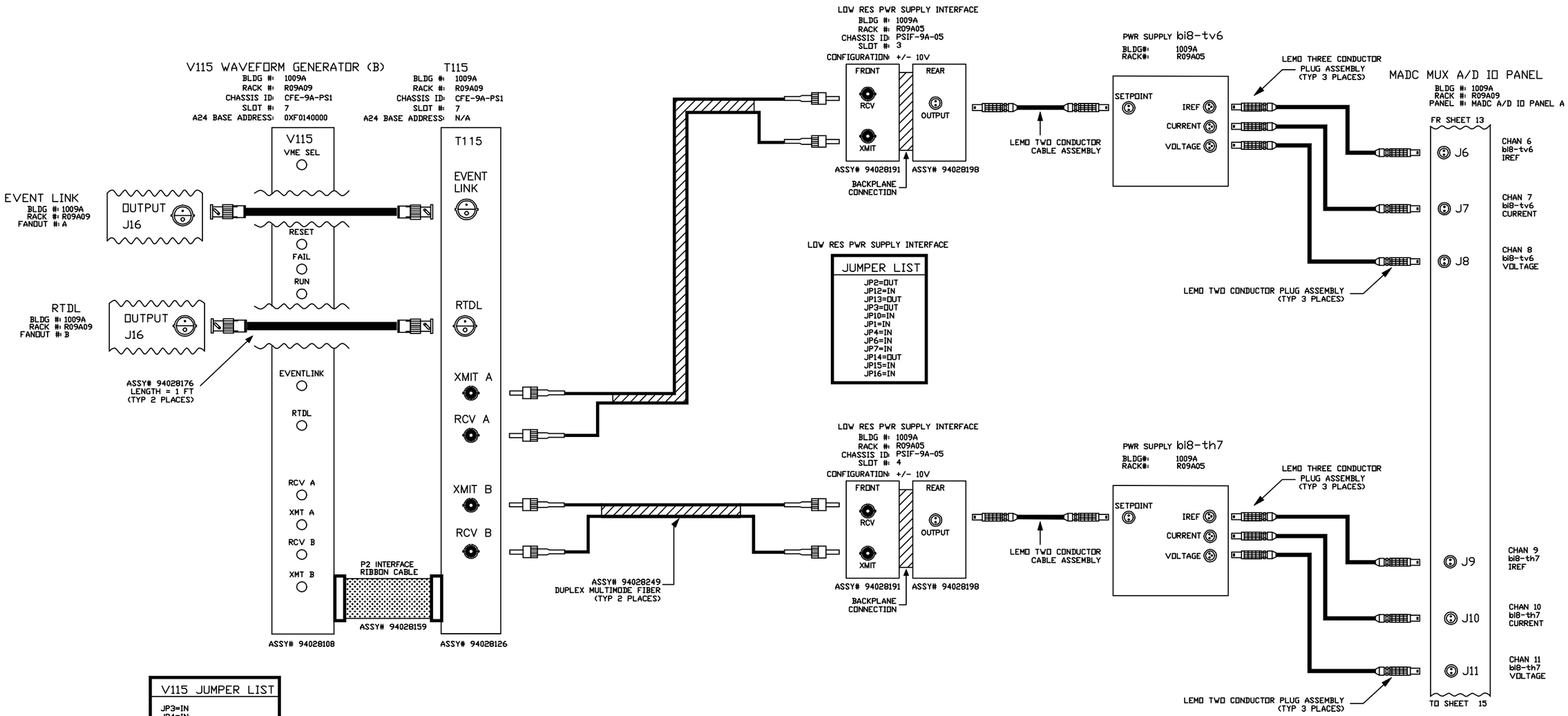

V115 JUMPER LIST
JP3=IN JP4=IN JP1=OUT JP2=OUT
A24 BASE ADDRESS JB1-A23=IN JB1-A22=IN JB1-A21=IN JB1-A20=OUT JB1-A19=IN JB1-A18=OUT

-3	-2	-1	REF DESIGNATOR	ITEM NO.	DESCRIPTION	MAT'L DWG NO./BNL NO.
QTY REQD						

INTERPRET IN GENERAL ACCORDANCE WITH ASME Y14.24M-1989

UNLESS OTHERWISE SPECIFIED DIMENSIONS ARE IN INCHES

DECIMAL TOLERANCES
.X ±.030
.XX ±.015
.XXX ±.005
ANGULAR TOLERANCE
± .5°

OUTSTANDING ECN

NA FINISH

BREAK SHARP EDGES
MAX. XX MIN. XX

Q.A. CATEGORY A-3		DATE
DRAWN BY	Ed Koropsak	3/9/98
CHECKED BY		
DESIGN APPROVAL		
ENGINEER APPROVAL	R. MICHNOFF	3/9/98
SUPVR. APPROVAL		

NEXT ASSEMBLY

BROOKHAVEN NATIONAL LABORATORY
UPTON, N.Y. 11973

RHIC CONTROLS WIRING DIAGRAM
ALCOVE 1009A, CFE-9A-PS1
POWER SUPPLY bi8-tv6/bi8-th7

SIZE D | DRAWING NUMBER 94028685 | REV. A

MATERIAL: ——— SCALE: NA WEIGHT: – SHEET 14 OF 53

*AUTOCAD

REV.	ZONE	ECN NO.	DATE	BY	CKR	APP.

CONTROLS- 6/2/03 1:15 PM 8685_15.dwg

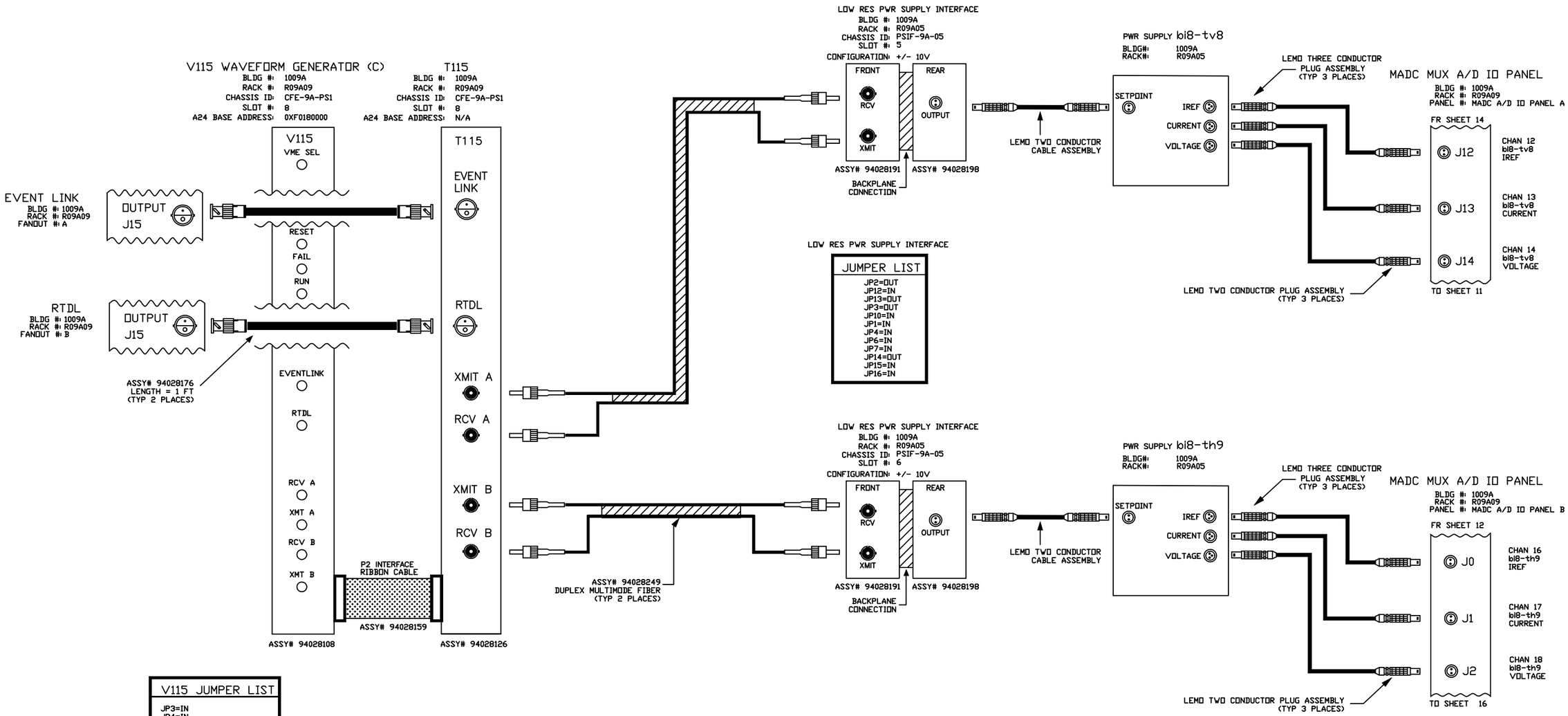

V115 JUMPER LIST
JP3=IN JP4=IN JP1=OUT JP2=OUT
A24 BASE ADDRESS JB1-A23=IN JB1-A22=IN JB1-A21=IN JB1-A20=OUT JB1-A19=OUT JB1-A18=IN

-3	-2	-1	REF DESIGNATOR	ITEM NO.	DESCRIPTION	MAT'L DWG NO./INL NO.
QTY REQD						

INTERPRET IN GENERAL ACCORDANCE WITH ASME Y14.24M-1989	Q.A. CATEGORY A-3	DATE	BROOKHAVEN NATIONAL LABORATORY
	DRAWN BY Ed Koropsak	3/10/98	UPTON, N.Y. 11973
UNLESS OTHERWISE SPECIFIED DIMENSIONS ARE IN INCHES	CHECKED BY		RHIC CONTROLS WIRING DIAGRAM
DECIMAL TOLERANCES .X ±.030 .XX ±.015 .XXX ±.005 ANGULAR TOLERANCE ± .5°	DESIGN APPROVAL		ALCOVE 1009A, CFE-9A-PS1
	ENGINEER APPROVAL R. MICHNOFF	3/10/98	POWER SUPPLY bi8-tv8/bi8-th9
	SUPVR. APPROVAL		SIZE D / DRAWING NUMBER 94028685 / REV. A
NA FINISH / BREAK SHARP EDGES MAX. XX MIN. XX	NEXT ASSEMBLY		MATERIAL: ——— SCALE: NA WEIGHT: – SHEET 15
OUTSTANDING ECN			

1 *AUTOCAD

REV.	ZONE	ECN NO.	DATE	BY	CKR	APP.

CONTROLS- 3/2/01 9:36 AM 8685_16.dwg

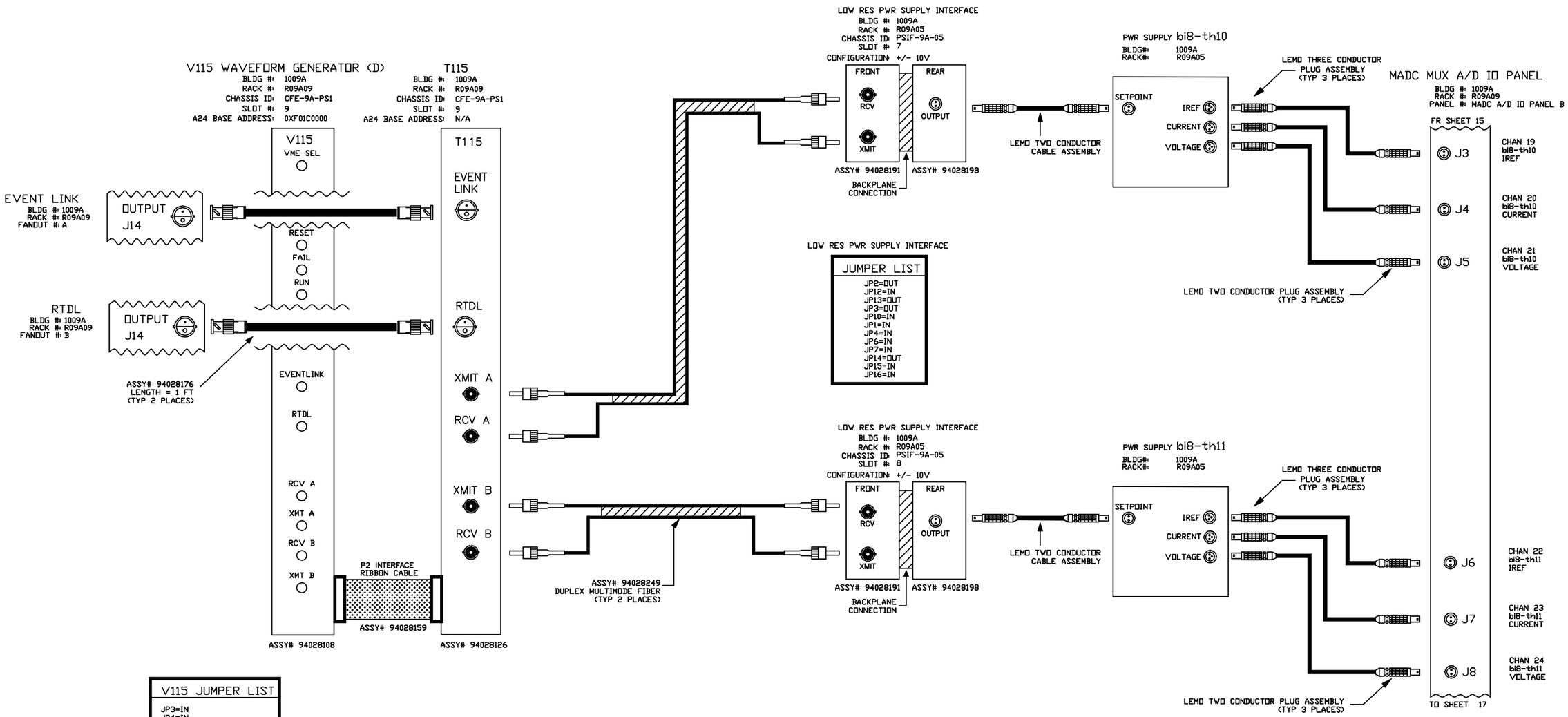

V115 JUMPER LIST
JP3=IN JP4=IN JP1=OUT JP2=OUT
A24 BASE ADDRESS JB1-A23=IN JB1-A22=IN JB1-A21=IN JB1-A20=OUT JB1-A19=OUT JB1-A18=OUT

-3	-2	-1	REF DESIGNATOR	ITEM NO.	DESCRIPTION	MAT'L DWG NO./PNL NO.
QTY REQD						

INTERPRET IN GENERAL ACCORDANCE WITH ASME Y14.24M-1989

UNLESS OTHERWISE SPECIFIED DIMENSIONS ARE IN INCHES

DECIMAL TOLERANCES
.X ±.030
.XX ±.015
.XXX ±.005
ANGULAR TOLERANCE
± .5°

OUTSTANDING ECN

NA FINISH

BREAK SHARP EDGES
MAX. XX MIN. XX

Q.A. CATEGORY A-3		DATE
DRAWN BY	Ed Koropsak	3/10/98
CHECKED BY		
DESIGN APPROVAL		
ENGINEER APPROVAL	R. MICHNOFF	3/10/98
SUPVR. APPROVAL		

NEXT ASSEMBLY

BROOKHAVEN NATIONAL LABORATORY
UPTON, N.Y. 11973

RHIC CONTROLS WIRING DIAGRAM
ALCOVE 1009A, CFE-9A-PS1

POWER SUPPLY bi8-tv10/bi8-th11

SIZE D | DRAWING NUMBER 94028685 | REV. A

MATERIAL: ——— SCALE: NA WEIGHT: – SHEET 16 OF 53

*AUTOCAD

REV.	ZONE	ECN NO.	DATE	BY	CKR	APP.

CONTROLS- 6/17/03 2:28 PM 8685_17.dwg

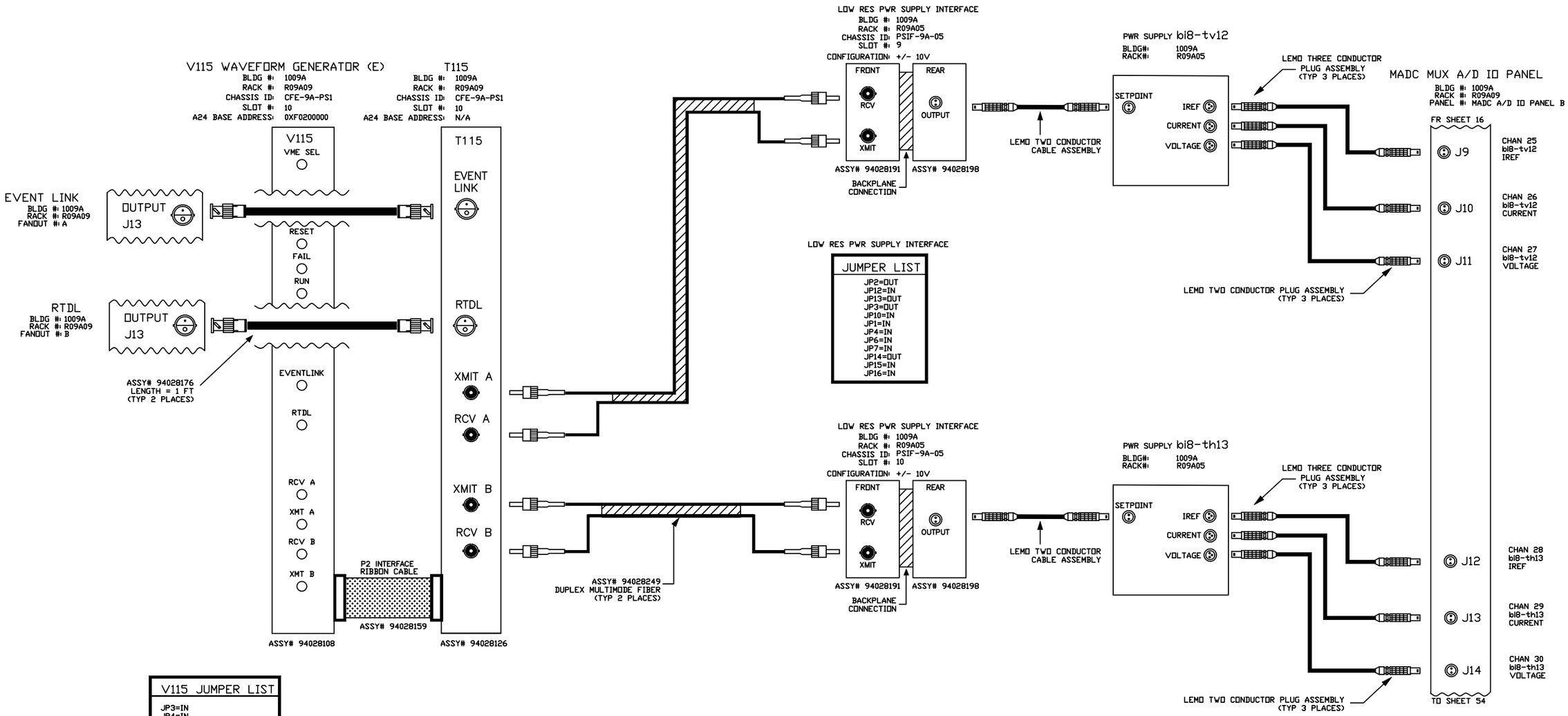

V115 JUMPER LIST
JP3=IN JP4=IN JP1=OUT JP2=OUT
A24 BASE ADDRESS JB1-A23=IN JB1-A22=IN JB1-A21=OUT JB1-A20=IN JB1-A19=IN JB1-A18=IN

-3	-2	-1	REF DESIGNATOR	ITEM NO.	DESCRIPTION	MAT'L DWG NO./INL NO.
QTY REQD						

INTERPRET IN GENERAL ACCORDANCE WITH ASME Y14.24M-1989

UNLESS OTHERWISE SPECIFIED DIMENSIONS ARE IN INCHES

DECIMAL TOLERANCES
.X ±.030
.XX ±.015
.XXX ±.005
ANGULAR TOLERANCE
± .5°

NA FINISH

BREAK SHARP EDGES
MAX. XX MIN. XX

OUTSTANDING ECN

Q.A. CATEGORY A-3		DATE
DRAWN BY	Ed Koropsak	3/10/98
CHECKED BY		
DESIGN APPROVAL		
ENGINEER APPROVAL	R. MICHNOFF	3/10/98
SUPVR. APPROVAL		

NEXT ASSEMBLY

BROOKHAVEN NATIONAL LABORATORY
UPTON, N.Y. 11973

RHIC CONTROLS WIRING DIAGRAM
ALCOVE 1009A, CFE-9A-PS1
POWER SUPPLY bi8-tv12/bi8-th13

SIZE D
DRAWING NUMBER 94028685
REV. A

MATERIAL: ——— SCALE: NA WEIGHT: – SHEET 17

*AUTOCAD

REV.	ZONE	ECN NO.	DATE	BY	CKR	APP.

CONTROLS- 6/17/03 2:34 PM 8685_18.dwg

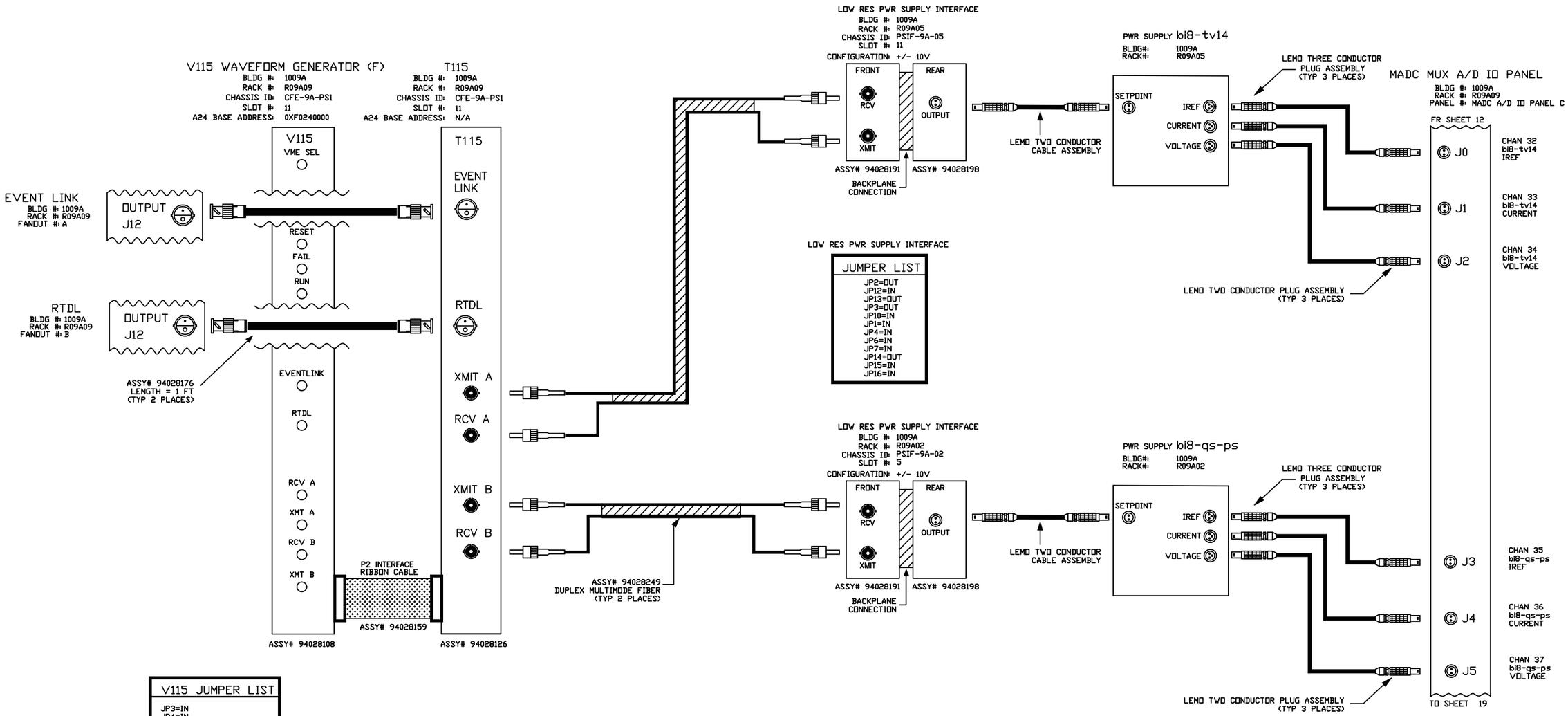

V115 JUMPER LIST
JP3=IN JP4=IN JP1=OUT JP2=OUT
A24 BASE ADDRESS JB1-A23=IN JB1-A22=IN JB1-A21=OUT JB1-A20=IN JB1-A19=IN JB1-A18=OUT

-3	-2	-1	REF DESIGNATOR	ITEM NO.	DESCRIPTION	MAT'L DWG NO.,SHL NO.
QTY REQD						

INTERPRET IN GENERAL ACCORDANCE WITH ASME Y14.24M-1989	Q.A. CATEGORY A-3	DATE	BROOKHAVEN NATIONAL LABORATORY
	DRAWN BY Ed Koropsak	3/10/98	UPTON, N.Y. 11973
UNLESS OTHERWISE SPECIFIED DIMENSIONS ARE IN INCHES	CHECKED BY		RHIC CONTROLS WIRING DIAGRAM
DECIMAL TOLERANCES .X ±.030 .XX ±.015 .XXX ±.005 ANGULAR TOLERANCE ± .5°	DESIGN APPROVAL		ALCOVE 1009A, CFE-9A-PS1
	ENGINEER APPROVAL R. MICHNOFF	3/10/98	PWR SUPPLY bi8-tv14/bi8-qs-ps
	SUPVR. APPROVAL		SIZE D / DRAWING NUMBER 94028685 / REV. A
NA FINISH / BREAK SHARP EDGES MAX. XX MIN. XX	NEXT ASSEMBLY		MATERIAL: —— SCALE: NA WEIGHT: – SHEET 18
OUTSTANDING ECN			

*AUTOCAD

REV.	ZONE	ECN NO.	DATE	BY	CKR	APP.

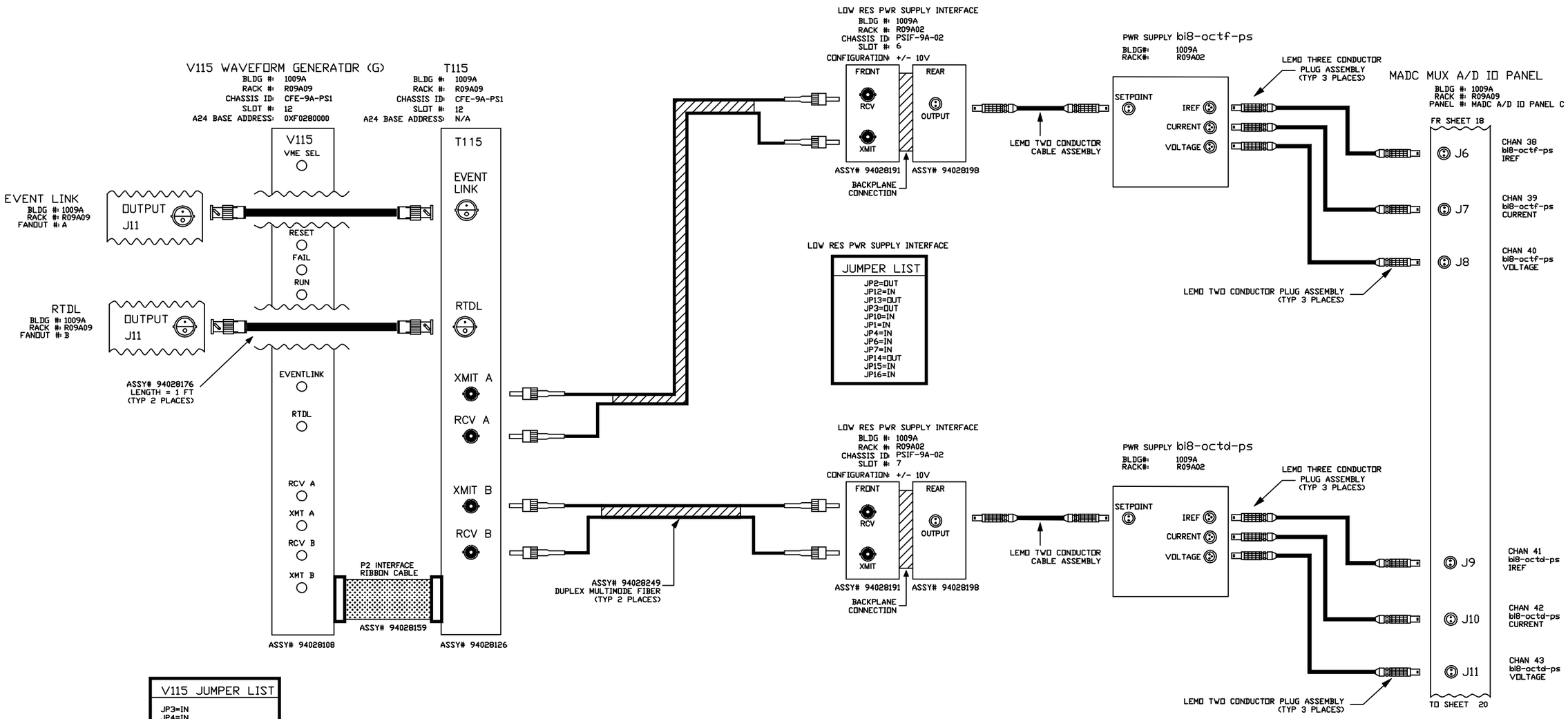

V115 JUMPER LIST
JP3=IN JP4=IN JP1=OUT JP2=OUT
A24 BASE ADDRESS JB1-A23=IN JB1-A22=IN JB1-A21=OUT JB1-A20=IN JB1-A19=OUT JB1-A18=IN

-3	-2	-1	REF DESIGNATOR	ITEM NO.	DESCRIPTION	MAT'L DWG NO./BNL NO.
QTY REQD						

INTERPRET IN GENERAL ACCORDANCE WITH ASME Y14.24M-1989

UNLESS OTHERWISE SPECIFIED DIMENSIONS ARE IN INCHES

DECIMAL TOLERANCES
.X ±.030
.XX ±.015
.XXX ±.005
ANGULAR TOLERANCE
± .5°

OUTSTANDING ECN

NA FINISH

BREAK SHARP EDGES
MAX. XX MIN. XX

Q.A. CATEGORY A-3		DATE
DRAWN BY	Ed Koropsak	3/10/98
CHECKED BY		
DESIGN APPROVAL		
ENGINEER APPROVAL	R. MICHNOFF	3/10/98
SUPVR. APPROVAL		

NEXT ASSEMBLY

BROOKHAVEN NATIONAL LABORATORY
UPTON, N.Y. 11973

RHIC CONTROLS WIRING DIAGRAM
ALCOVE 1009A, CFE-9A-PS1

PWRSPLY bi8-octf-ps/bi8-octd-ps

SIZE D | DRAWING NUMBER 94028685 | REV. A

MATERIAL: ——— SCALE: NA WEIGHT: – SHEET 19 OF 53

*AUTOCAD

REV.	ZONE	ECN NO.	DATE	BY	CKR	APP.

CONTROLS- 3/2/01 9:42 AM 8685_20.dwg

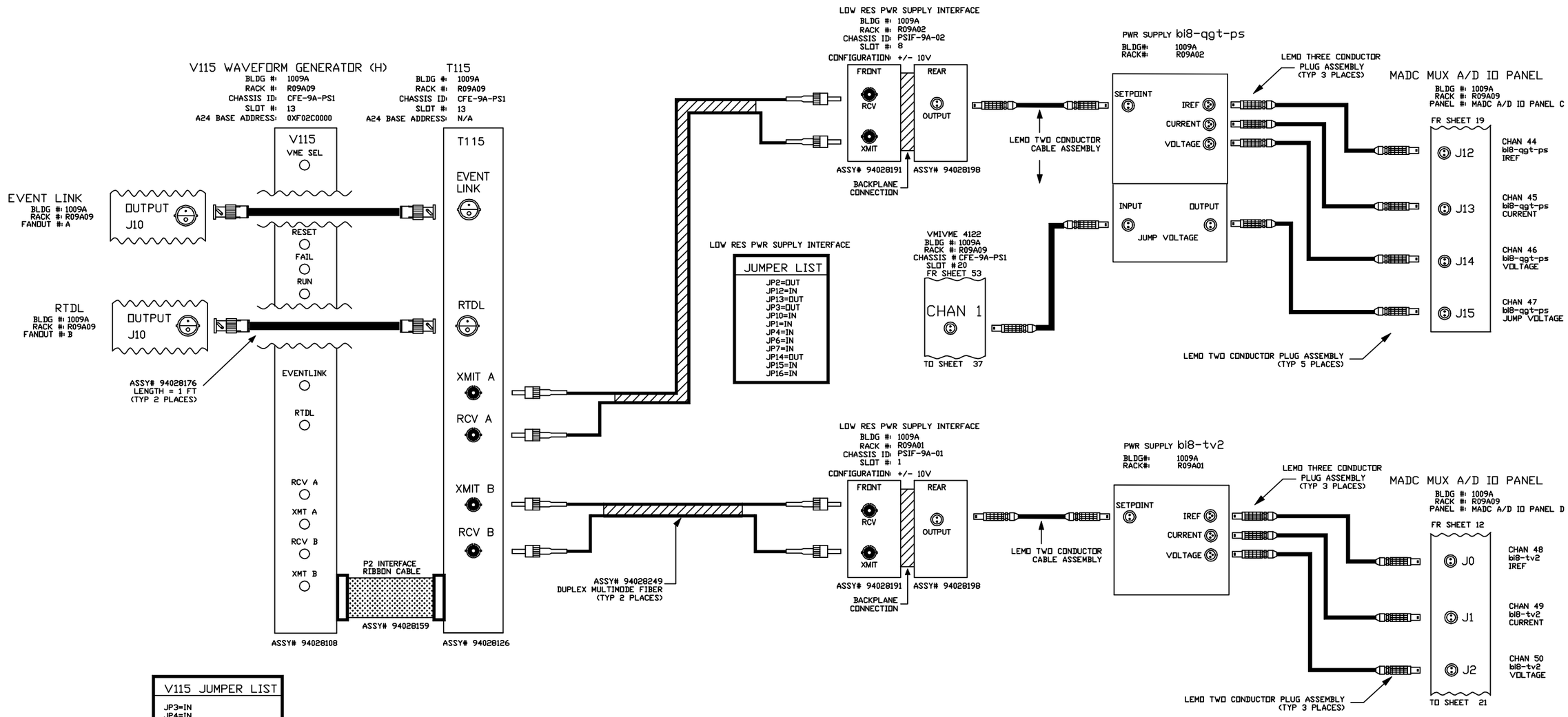

V115 JUMPER LIST
JP3=IN JP4=IN JP1=OUT JP2=OUT
A24 BASE ADDRESS JB1-A23=IN JB1-A22=IN JB1-A21=OUT JB1-A20=IN JB1-A19=OUT JB1-A18=OUT

-3	-2	-1	REF DESIGNATOR	ITEM NO.	DESCRIPTION	MAT'L DWG NO./PNL NO.
QTY REQD						

INTERPRET IN GENERAL ACCORDANCE WITH ASME Y14.24M-1989

UNLESS OTHERWISE SPECIFIED DIMENSIONS ARE IN INCHES

DECIMAL TOLERANCES
.X ±.030
.XX ±.015
.XXX ±.005
ANGULAR TOLERANCE
± .5°

OUTSTANDING ECN: NA

FINISH: √

BREAK SHARP EDGES
MAX. XX MIN. XX

Q.A. CATEGORY A-3		DATE
DRAWN BY	Ed Koropsak	3/10/98
CHECKED BY		
DESIGN APPROVAL		
ENGINEER APPROVAL	R. MICHNOFF	3/10/98
SUPVR. APPROVAL		

NEXT ASSEMBLY

BROOKHAVEN NATIONAL LABORATORY
UPTON, N.Y. 11973

RHIC CONTROLS WIRING DIAGRAM
ALCOVE 1009A, CFE-9A-PS1
PWR SPLY bi8-qgt-ps/bi8-tv2

SIZE: D
DRAWING NUMBER: 94028685
REV.: A

MATERIAL: ——— SCALE: NA WEIGHT: – SHEET 20 OF 53

*AUTOCAD

REV.	ZONE	ECN NO.	DATE	BY	CKR	APP.

CONTROLS- 3/2/01 9:44 AM 8685_21.dwg

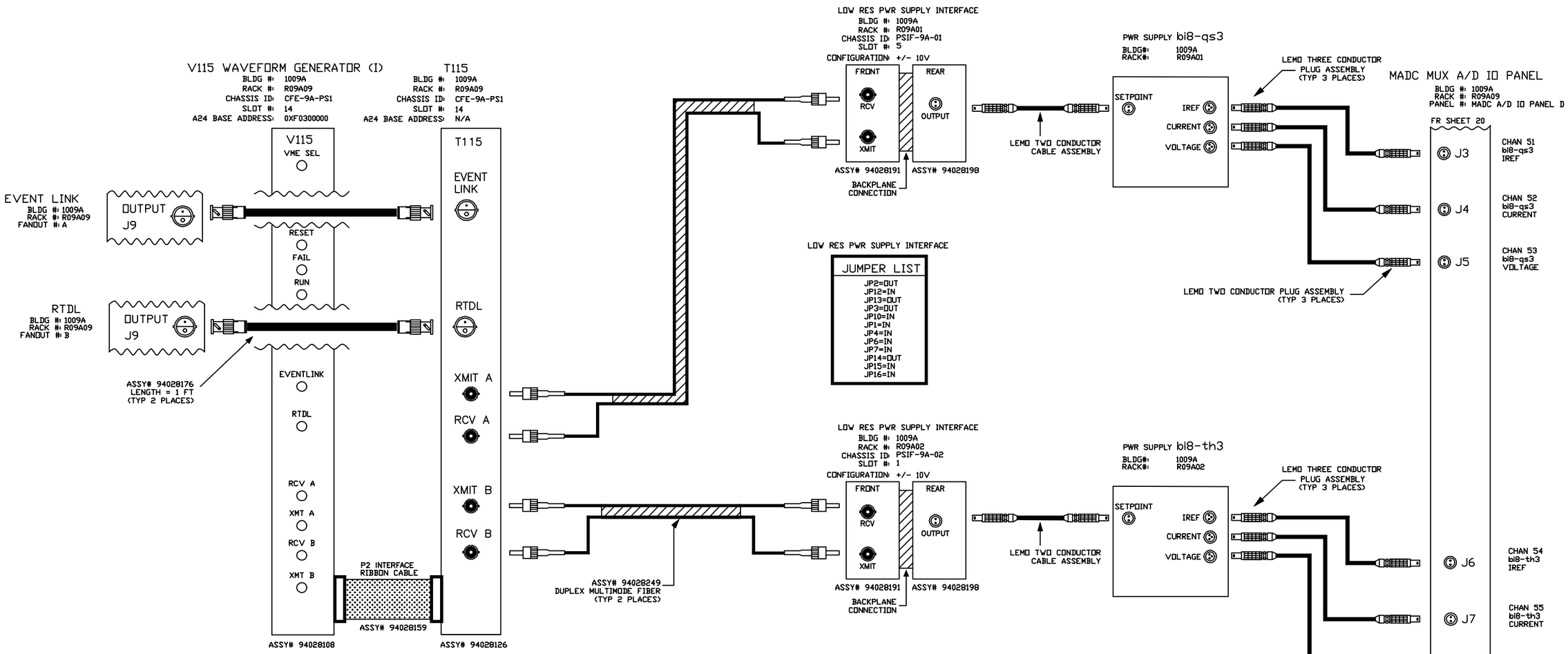

V115 JUMPER LIST
JP3=IN JP4=IN JP1=OUT JP2=OUT
A24 BASE ADDRESS JB1-A23=IN JB1-A22=IN JB1-A21=OUT JB1-A20=OUT JB1-A19=IN JB1-A18=IN

-3	-2	-1	REF DESIGNATOR	ITEM NO.	DESCRIPTION	MAT'L DWG NO./BNL NO.
QTY REQD						

INTERPRET IN GENERAL ACCORDANCE WITH ASME Y14.24M-1989

UNLESS OTHERWISE SPECIFIED DIMENSIONS ARE IN INCHES

DECIMAL TOLERANCES
.X ±.030
.XX ±.015
.XXX ±.005
ANGULAR TOLERANCE
± .5°

OUTSTANDING ECN: NA

FINISH: √

BREAK SHARP EDGES
MAX. XX MIN. XX

Q.A. CATEGORY A-3		DATE
DRAWN BY	Ed Koropsak	3/10/98
CHECKED BY		
DESIGN APPROVAL		
ENGINEER APPROVAL	R. MICHNOFF	3/10/98
SUPVR. APPROVAL		
NEXT ASSEMBLY		

BROOKHAVEN NATIONAL LABORATORY
UPTON, N.Y. 11973

RHIC CONTROLS WIRING DIAGRAM
ALCOVE 1009A, CFE-9A-PS1

POWER SUPPLY bi8-qs3/bi8-th3

SIZE: D
DRAWING NUMBER: 94028685
REV.: A

MATERIAL: ——— SCALE: NA WEIGHT: – SHEET 21 OF 53

*AUTOCAD

REV.	ZONE	ECN NO.	DATE	BY	CKR	APP.

CONTROLS- 6/17/03 2:36 PM 8685_22.dwg

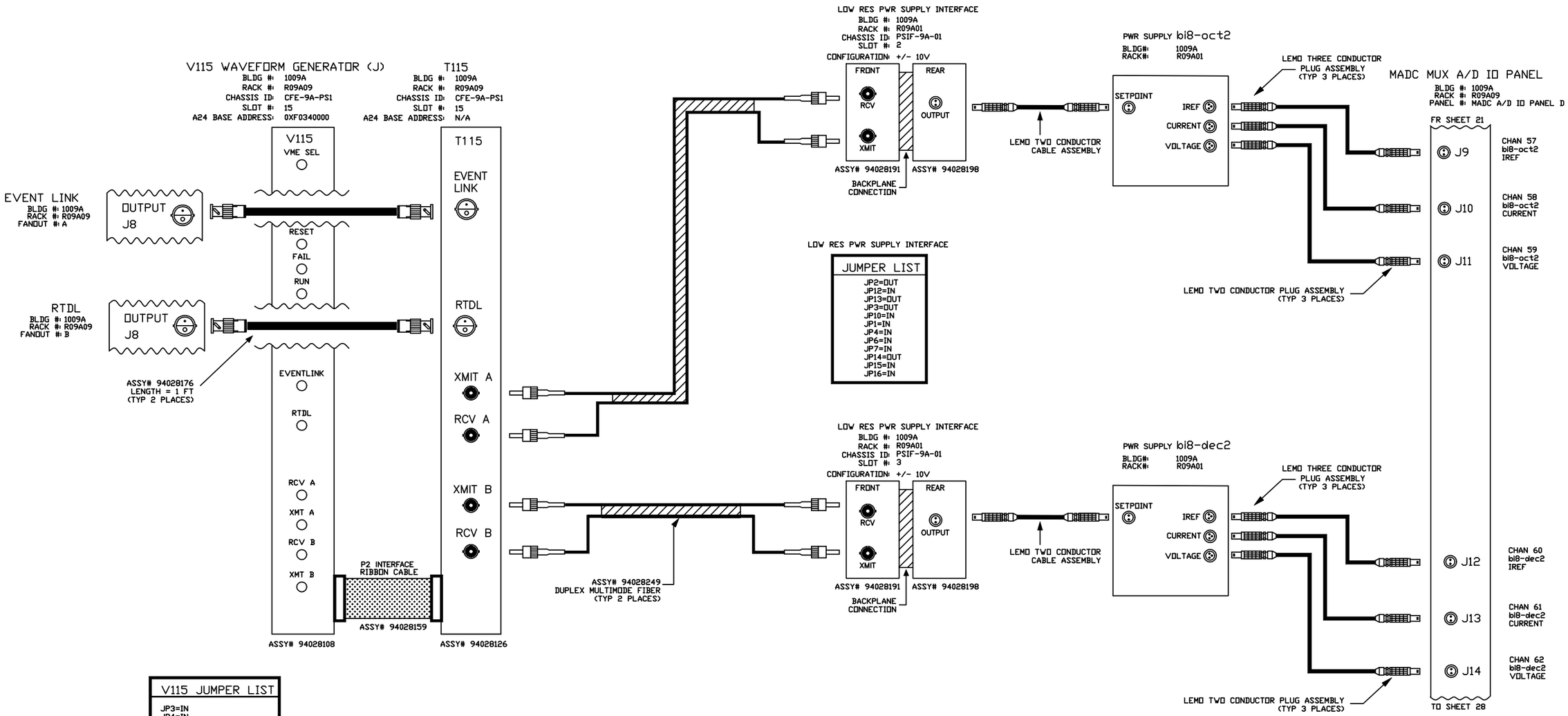

V115 JUMPER LIST
JP3=IN JP4=IN JP1=OUT JP2=OUT
A24 BASE ADDRESS JB1-A23=IN JB1-A22=IN JB1-A21=OUT JB1-A20=OUT JB1-A19=IN JB1-A18=OUT

-3	-2	-1	REF DESIGNATOR	ITEM NO.	DESCRIPTION	MAT'L DWG NO./BNL NO.
QTY REQD						

INTERPRET IN GENERAL ACCORDANCE WITH ASME Y14.24M-1989

UNLESS OTHERWISE SPECIFIED DIMENSIONS ARE IN INCHES

DECIMAL TOLERANCES
.X ±.030
.XX ±.015
.XXX ±.005
ANGULAR TOLERANCE
± .5°

NA FINISH

BREAK SHARP EDGES
MAX. XX MIN. XX

OUTSTANDING ECN

Q.A. CATEGORY A-3		DATE
DRAWN BY	Ed Koropsak	3/10/98
CHECKED BY		
DESIGN APPROVAL		
ENGINEER APPROVAL	R. MICHNOFF	3/10/98
SUPVR. APPROVAL		

NEXT ASSEMBLY

BROOKHAVEN NATIONAL LABORATORY
UPTON, N.Y. 11973

RHIC CONTROLS WIRING DIAGRAM
ALCOVE 1009A, CFE-9A-PS1
POWER SUPPLY bi8-oct2/bi8-dec2

SIZE D
DRAWING NUMBER 94028685
REV. A

MATERIAL: ——— SCALE: NA WEIGHT: – SHEET 22

*AUTOCAD

CONTROLS- 3/2/01 10:35 AM 8685_23.dwg

REV.	ZONE	ECN NO.	DATE	BY	CKR	APP.

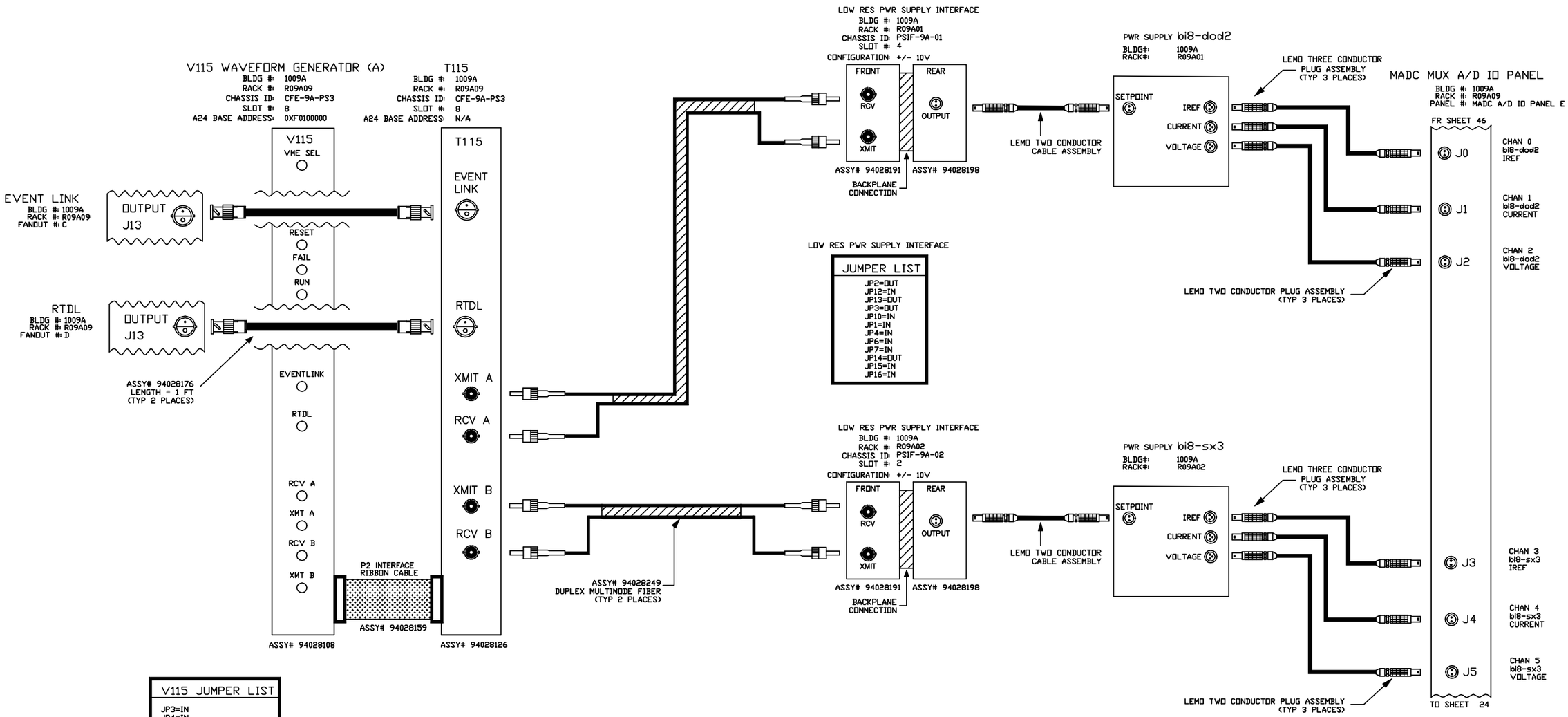

V115 JUMPER LIST
JP3=IN JP4=IN JP1=OUT JP2=OUT
A24 BASE ADDRESS JB1-A23=IN JB1-A22=IN JB1-A21=IN JB1-A20=OUT JB1-A19=IN JB1-A18=IN

-3	-2	-1	REF DESIGNATOR	ITEM NO.	DESCRIPTION	MAT'L DWG NO./BNL NO.
QTY REQD						

INTERPRET IN GENERAL ACCORDANCE WITH ASME Y14.24M-1989

UNLESS OTHERWISE SPECIFIED DIMENSIONS ARE IN INCHES

DECIMAL TOLERANCES
.X ±.030
.XX ±.015
.XXX ±.005
ANGULAR TOLERANCE
± .5°

NA FINISH

BREAK SHARP EDGES
MAX. XX MIN. XX

OUTSTANDING ECN

Q.A. CATEGORY A-3		DATE
DRAWN BY	Ed Koropsak	3/10/98
CHECKED BY		
DESIGN APPROVAL		
ENGINEER APPROVAL	R. MICHNOFF	3/10/98
SUPVR. APPROVAL		

NEXT ASSEMBLY

BROOKHAVEN NATIONAL LABORATORY
UPTON, N.Y. 11973

RHIC CONTROLS WIRING DIAGRAM
ALCOVE 1009A, CFE-9A-PS3

POWER SUPPLY bi8-dod2/bi8-sx3

SIZE D | DRAWING NUMBER 94028685 | REV. A

MATERIAL: ——— SCALE: NA WEIGHT: – SHEET 23 OF 53

*AUTOCAD

REV.	ZONE	ECN NO.	DATE	BY	CKR	APP.

CONTROLS- 3/2/01 10:40 AM 8685_24.dwg

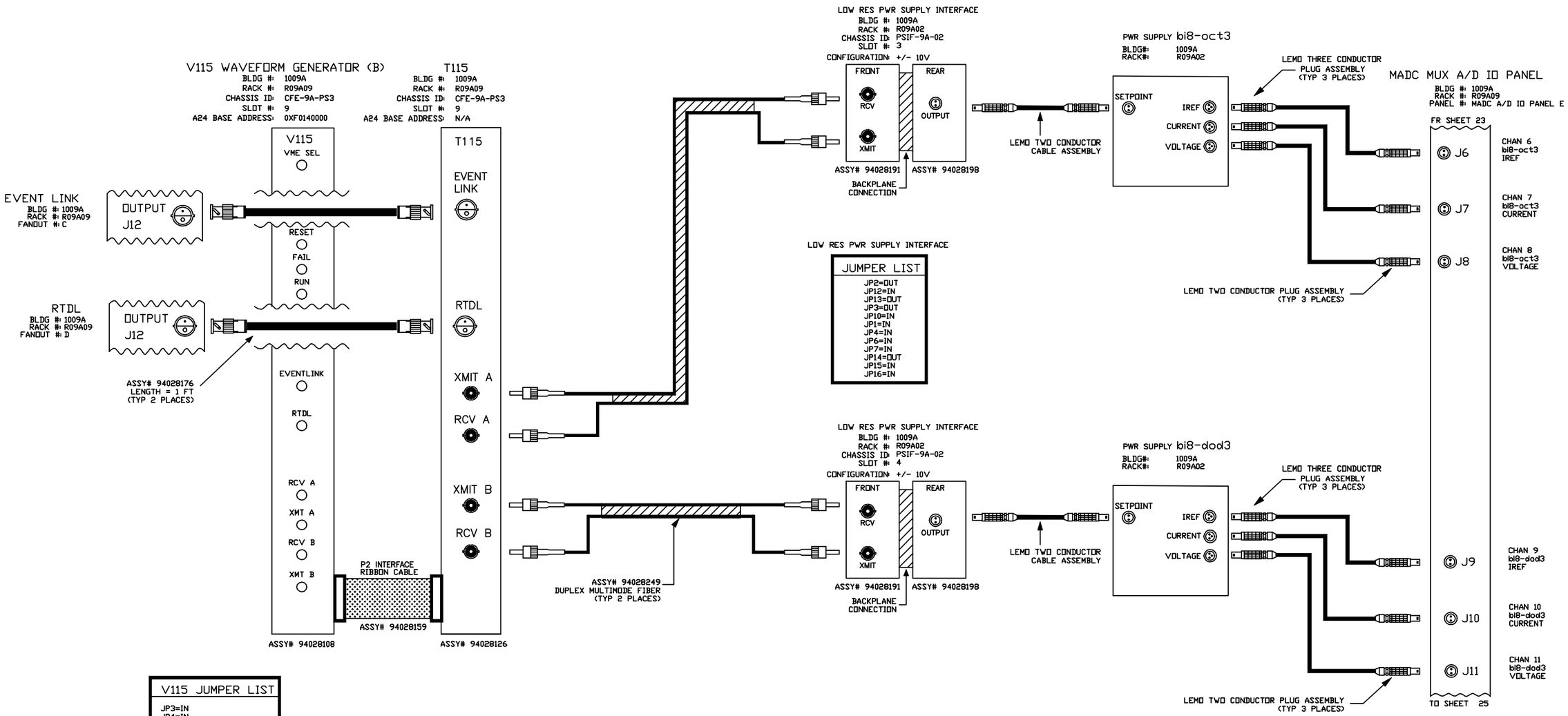

V115 JUMPER LIST
JP3=IN JP4=IN JP1=OUT JP2=OUT
A24 BASE ADDRESS JB1-A23=IN JB1-A22=IN JB1-A21=IN JB1-A20=OUT JB1-A19=IN JB1-A18=OUT

-3	-2	-1	REF DESIGNATOR	ITEM NO.	DESCRIPTION	MAT'L DWG NO./BNL NO.
QTY REQD						

INTERPRET IN GENERAL ACCORDANCE WITH ASME Y14.24M-1989

UNLESS OTHERWISE SPECIFIED DIMENSIONS ARE IN INCHES

DECIMAL TOLERANCES
.X ±.030
.XX ±.015
.XXX ±.005
ANGULAR TOLERANCE
± .5°

OUTSTANDING ECN

NA FINISH

BREAK SHARP EDGES
MAX. XX MIN. XX

Q.A. CATEGORY A-3		DATE
DRAWN BY	Ed Koropsak	3/11/98
CHECKED BY		
DESIGN APPROVAL		
ENGINEER APPROVAL	R. MICHNOFF	3/11/98
SUPVR. APPROVAL		

NEXT ASSEMBLY

BROOKHAVEN NATIONAL LABORATORY
UPTON, N.Y. 11973

RHIC CONTROLS WIRING DIAGRAM
ALCOVE 1009A, CFE-9A-PS3

PWRSPLY bi8-oct3/bi8-dod3

SIZE D
DRAWING NUMBER 94028685
REV. A

MATERIAL: ——— SCALE: NA WEIGHT: – SHEET 24 OF 53

*AUTOCAD

REV.	ZONE	ECN NO.	DATE	BY	CKR	APP.

CONTROLS- 6/17/03 2:37 PM 8685_25.dwg

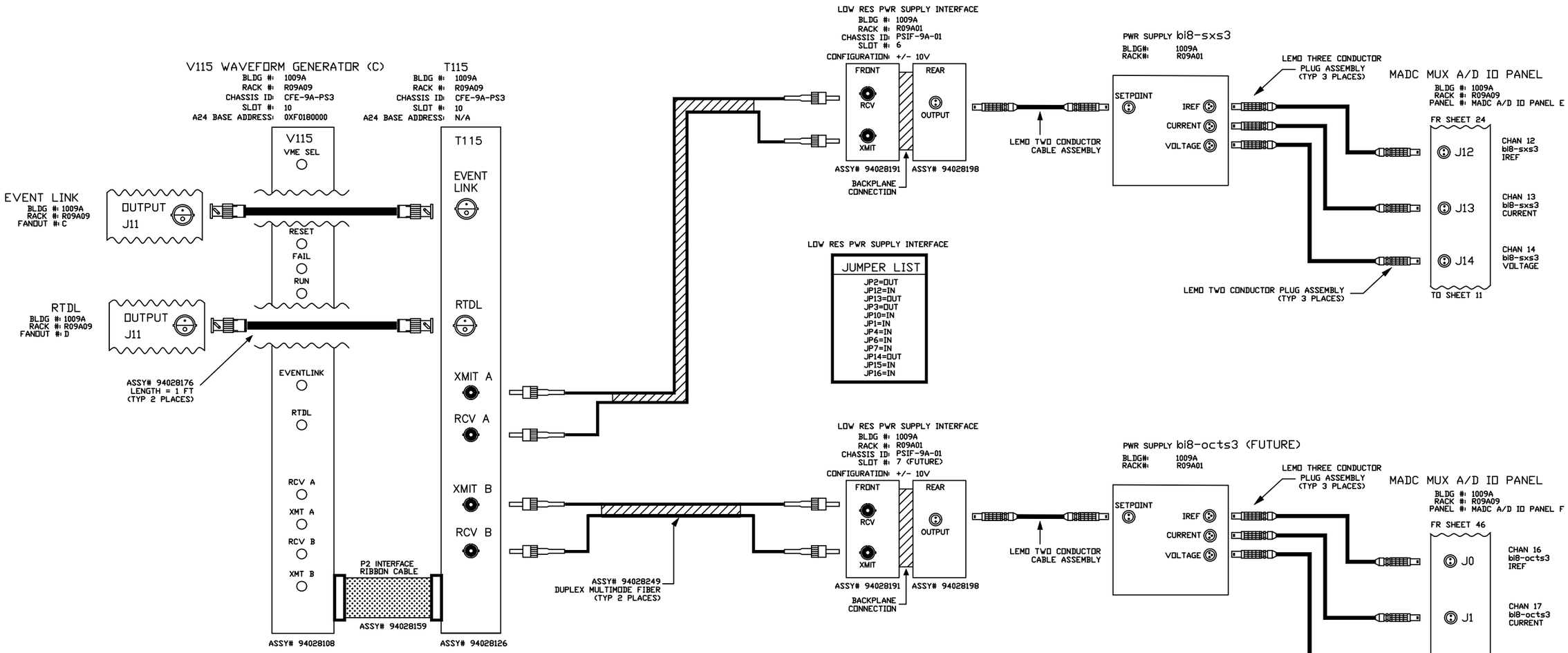

V115 JUMPER LIST
JP3=IN JP4=IN JP1=OUT JP2=OUT
A24 BASE ADDRESS JB1-A23=IN JB1-A22=IN JB1-A21=IN JB1-A20=OUT JB1-A19=OUT JB1-A18=IN

-3	-2	-1	REF DESIGNATOR	ITEM NO.	DESCRIPTION	MAT'L DWG NO./BNL NO.
QTY REQD						

INTERPRET IN GENERAL ACCORDANCE WITH ASME Y14.24M-1989

UNLESS OTHERWISE SPECIFIED DIMENSIONS ARE IN INCHES

DECIMAL TOLERANCES
.X ±.030
.XX ±.015
.XXX ±.005
ANGULAR TOLERANCE
± .5°

NA FINISH

BREAK SHARP EDGES
MAX. XX MIN. XX

OUTSTANDING ECN

Q.A. CATEGORY A-3		DATE
DRAWN BY	Ed Koropsak	3/11/98
CHECKED BY		
DESIGN APPROVAL		
ENGINEER APPROVAL	R. MICHNOFF	3/11/98
SUPVR. APPROVAL		

NEXT ASSEMBLY

BROOKHAVEN NATIONAL LABORATORY
UPTON, N.Y. 11973

RHIC CONTROLS WIRING DIAGRAM
ALCOVE 1009A, CFE-9A-PS3
PWR SPLY bi8-sxs3/bi8-octs3

SIZE D
DRAWING NUMBER 94028685
REV. A

MATERIAL: ——— SCALE: NA WEIGHT: – SHEET 25

*AUTOCAD

CONTROLS- 6/2/03 2:06 PM 8685_26.dwg

REV.	ZONE	ECN NO.	DATE	BY	CKR	APP.

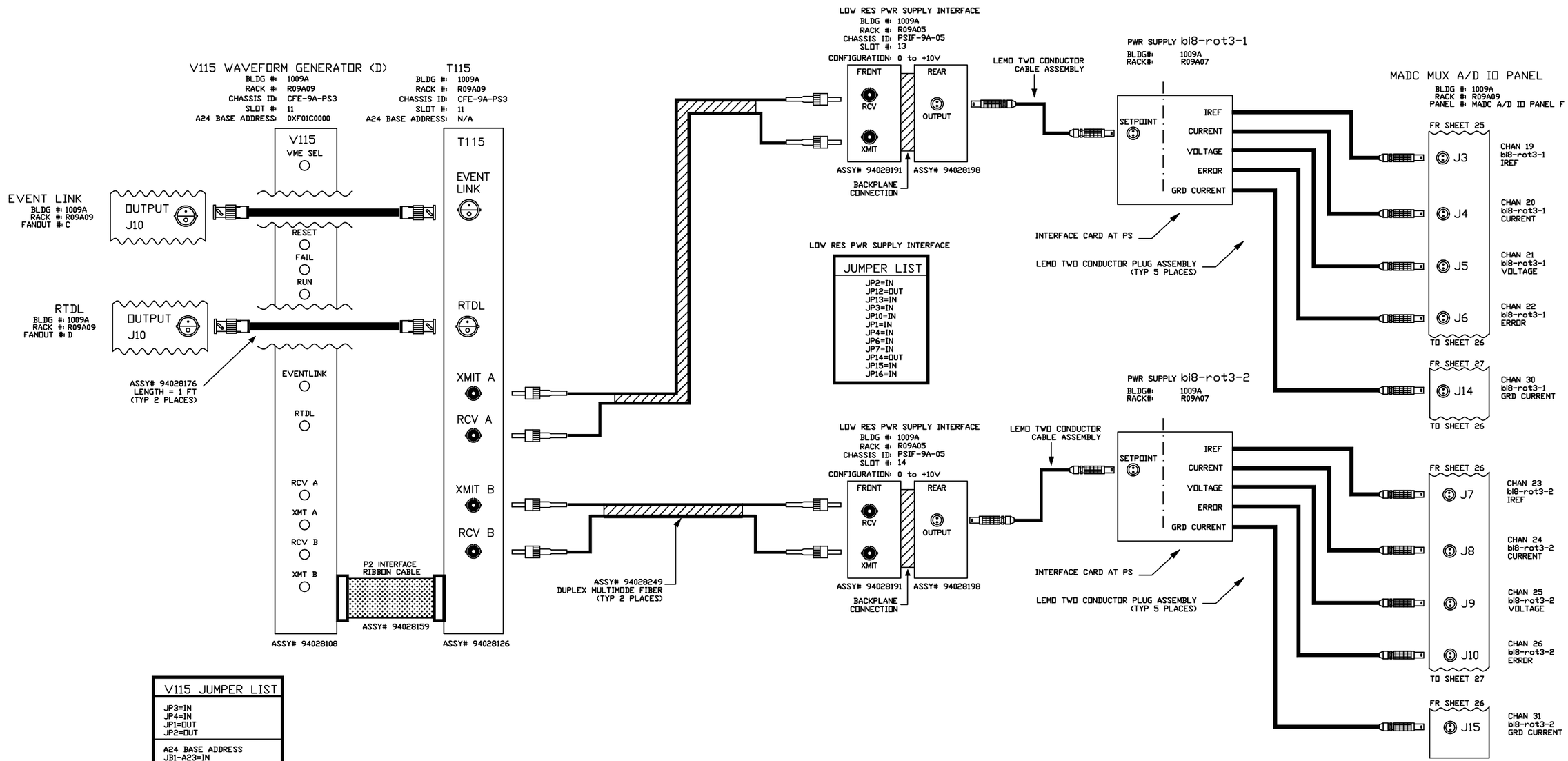

LOW RES PWR SUPPLY INTERFACE

JUMPER LIST
JP2=IN
JP12=OUT
JP13=IN
JP3=IN
JP10=IN
JP1=IN
JP4=IN
JP6=IN
JP7=IN
JP14=OUT
JP15=IN
JP16=IN

V115 JUMPER LIST
JP3=IN JP4=IN JP1=OUT JP2=OUT
A24 BASE ADDRESS JB1-A23=IN JB1-A22=IN JB1-A21=IN JB1-A20=OUT JB1-A19=OUT JB1-A18=OUT

-3	-2	-1	REF DESIGNATOR	ITEM NO.	DESCRIPTION	MAT'L DWG NO./BNL NO.
QTY REQD						

INTERPRET IN GENERAL ACCORDANCE WITH ASME Y14.24M-1989

UNLESS OTHERWISE SPECIFIED DIMENSIONS ARE IN INCHES

DECIMAL TOLERANCES
.X ±.030
.XX ±.015
.XXX ±.005
ANGULAR TOLERANCE
± .5°

NA FINISH

BREAK SHARP EDGES
MAX. XX MIN. XX

OUTSTANDING ECN

Q.A. CATEGORY A-3		DATE
DRAWN BY	Ed Koropsak	3/11/98
CHECKED BY		
DESIGN APPROVAL		
ENGINEER APPROVAL	R. MICHNOFF	3/11/98
SUPVR. APPROVAL		

NEXT ASSEMBLY

BROOKHAVEN NATIONAL LABORATORY
UPTON, N.Y. 11973

RHIC CONTROLS WIRING DIAGRAM

ALCOVE 1009A, CFE-9A-PS3

PWRSPLY bi8-rot3-1/bi8-rot3-2

SIZE D | 94028685 | REV. A

DRAWING NUMBER

MATERIAL: ——— SCALE: NA WEIGHT: – SHEET 26

*AUTOCAD

CONTROLS- 6/2/03 2:09 PM 8685_27.dwg

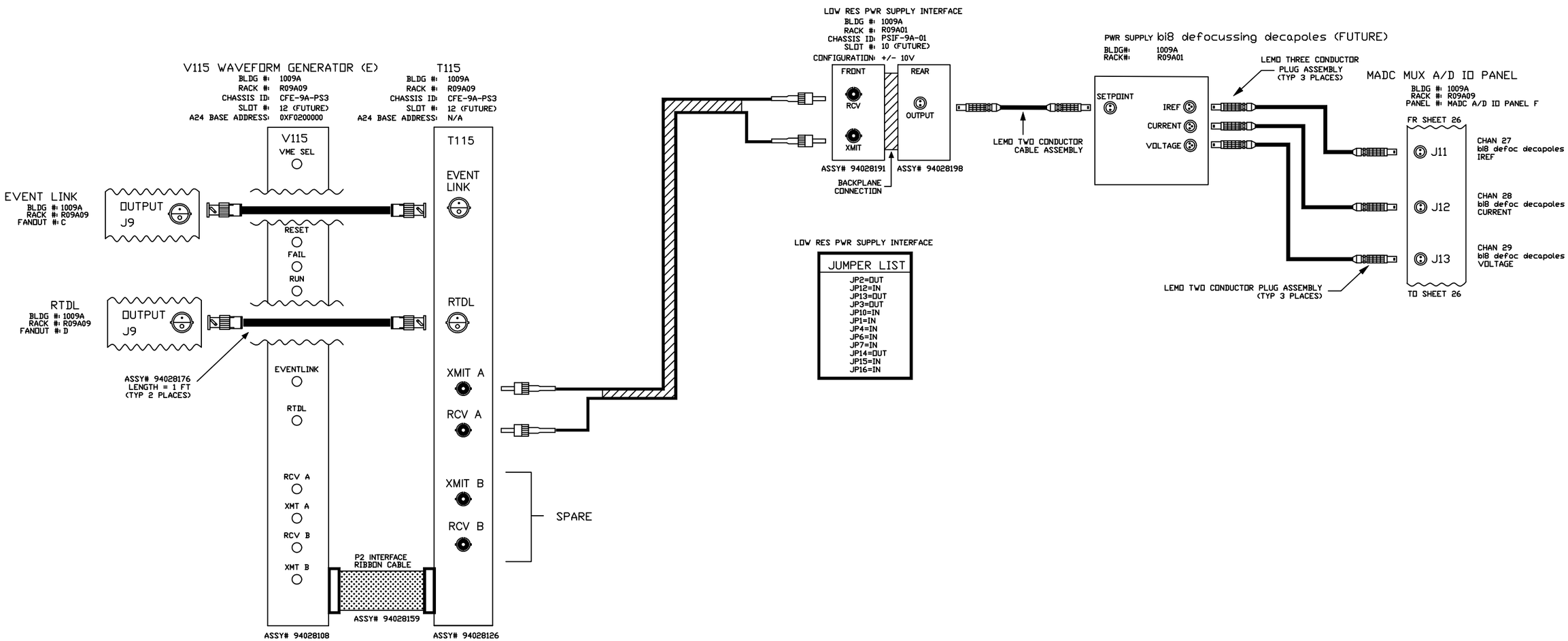

LOW RES PWR SUPPLY INTERFACE

JUMPER LIST
JP2=OUT
JP12=IN
JP13=OUT
JP3=OUT
JP10=IN
JP1=IN
JP4=IN
JP6=IN
JP7=IN
JP14=OUT
JP15=IN
JP16=IN

V115 JUMPER LIST
JP3=IN JP4=IN JP1=OUT JP2=OUT
A24 BASE ADDRESS JB1-A23=IN JB1-A22=IN JB1-A21=OUT JB1-A20=IN JB1-A19=IN JB1-A18=IN

REV.	ZONE	ECN NO.	DATE	BY	CKR	APP.

-3	-2	-1	REF DESIGNATOR	ITEM NO.	DESCRIPTION	MAT'L. DWG NO./INL NO.
QTY REQD						

INTERPRET IN GENERAL ACCORDANCE WITH ASME Y14.24M-1989

UNLESS OTHERWISE SPECIFIED DIMENSIONS ARE IN INCHES

DECIMAL TOLERANCES
X ±.030
.XX ±.015
.XXX ±.005
ANGULAR TOLERANCE
± .5°

NA FINISH

BREAK SHARP EDGES
MAX. XX MIN. XX

OUTSTANDING ECN

Q.A. CATEGORY A-3		DATE
DRAWN BY	Ed Koropsak	3/11/98
CHECKED BY		
DESIGN APPROVAL		
ENGINEER APPROVAL	R. MICHNOFF	3/11/98
SUPVR. APPROVAL		

NEXT ASSEMBLY

BROOKHAVEN NATIONAL LABORATORY
UPTON, N.Y. 11973

RHIC CONTROLS WIRING DIAGRAM
ALCOVE 1009A, CFE-9A-PS3
PWR SPLY bi8 defoc decapoles

SIZE D | DRAWING NUMBER 94028685 | REV. A

MATERIAL: ——— SCALE: NA WEIGHT: – SHEET 27

*AUTOCAD

REV.	ZONE	ECN NO.	DATE	BY	CKR	APP.

CONTROLS- 6/17/03 2:40 PM 8685_28.dwg

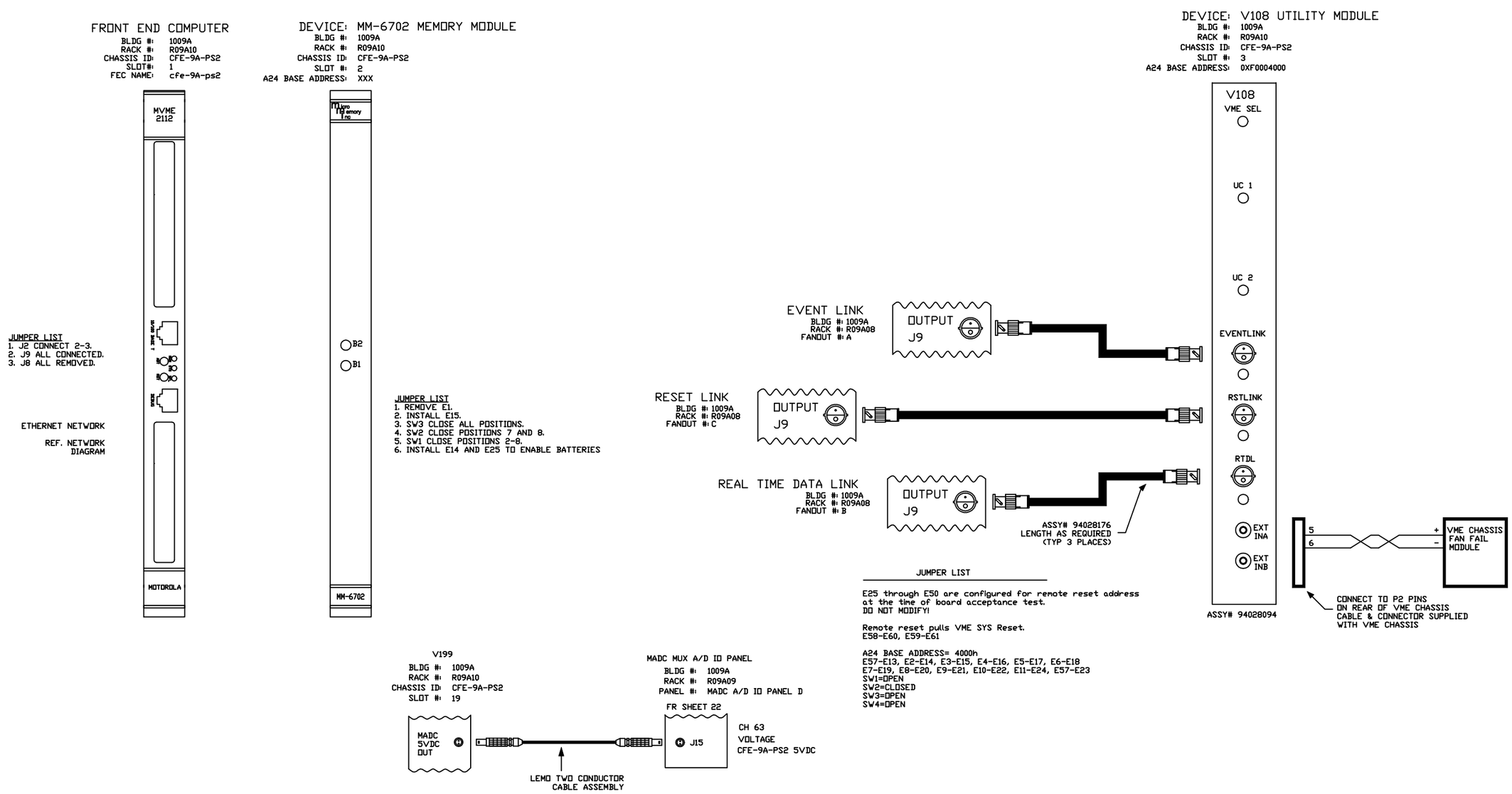

-3	-2	-1	REF DESIGNATOR	ITEM NO.	DESCRIPTION	MAT'L DWG NO./BNL NO.
QTY REQD						

INTERPRET IN GENERAL ACCORDANCE WITH ASME Y14.24M-1989	Q.A. CATEGORY A-3	DATE	BROOKHAVEN NATIONAL LABORATORY UPTON, N.Y. 11973	
	DRAWN BY Venegas	8/12/99		
UNLESS OTHERWISE SPECIFIED DIMENSIONS ARE IN INCHES	CHECKED BY		RHIC CONTROLS WIRING DIAGRAM	
DECIMAL TOLERANCES .X ±.030 .XX ±.015 .XXX ±.005 ANGULAR TOLERANCE ± .5°	DESIGN APPROVAL		ALCOVE 1009A, VME CHASSIS CFE-9A-PS2	
	ENGINEER APPROVAL R. MICHNOFF	10/21/97	CPU/MEMORY /V108 UTIL MODULE	
	SUPVR. APPROVAL		SIZE D	94028685 REV. A
NA FINISH	BREAK SHARP EDGES MAX. XX MIN. XX	NEXT ASSEMBLY	DRAWING NUMBER	
OUTSTANDING ECN			MATERIAL: ——— SCALE: NA WEIGHT: — SHEET 28	

*AUTOCAD

REV.	ZONE	ECN NO.	DATE	BY	CKR	APP.

ACS, BNL 8/24/00 3:35 PM 8685_29.dwg

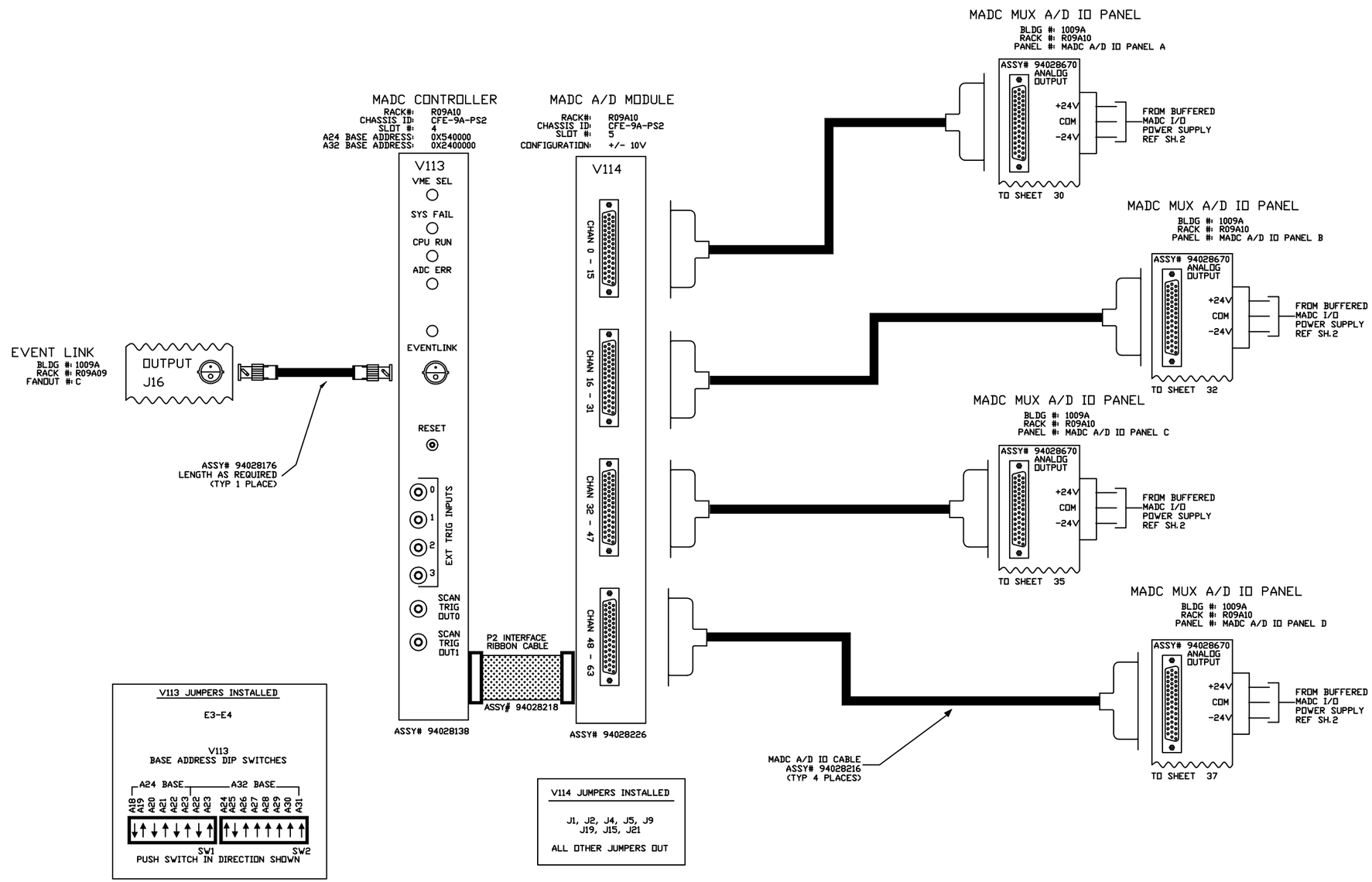

V113 JUMPERS INSTALLED

E3-E4

V113
BASE ADDRESS DIP SWITCHES

PUSH SWITCH IN DIRECTION SHOWN

V114 JUMPERS INSTALLED

J1, J2, J4, J5, J9
J19, J15, J21

ALL OTHER JUMPERS OUT

-3	-2	-1	REF DESIGNATOR	ITEM NO.	DESCRIPTION	MAT'L DWG NO./BNL NO.
QTY REQD						

INTERPRET IN GENERAL ACCORDANCE WITH ASME Y14.24M-1989

UNLESS OTHERWISE SPECIFIED DIMENSIONS ARE IN INCHES

DECIMAL TOLERANCES
.X ±.030
.XX ±.015
.XXX ±.005
ANGULAR TOLERANCE
± .5°

NA FINISH

BREAK SHARP EDGES
MAX. XX MIN. XX

OUTSTANDING ECN

Q.A. CATEGORY A-3		DATE
DRAWN BY	Ed Koropsak	3/11/98
CHECKED BY		
DESIGN APPROVAL		
ENGINEER APPROVAL	R. MICHNOFF	3/11/98
SUPVR. APPROVAL		

NEXT ASSEMBLY

BROOKHAVEN NATIONAL LABORATORY
UPTON, N.Y. 11973

RHIC CONTROLS WIRING DIAGRAM

ALCOVE 1009A, VME CHASSIS CFE-9A-PS2

MADC SYSTEM

SIZE D | DRAWING NUMBER 94028685 | REV. A

MATERIAL: ——— SCALE: NA WEIGHT: – SHEET 29 OF 52

*AUTOCAD

REV.	ZONE	ECN NO.	DATE	BY	CKR	APP.

CONTROLS- 3/2/01 11:03 AM 8685_30.dwg

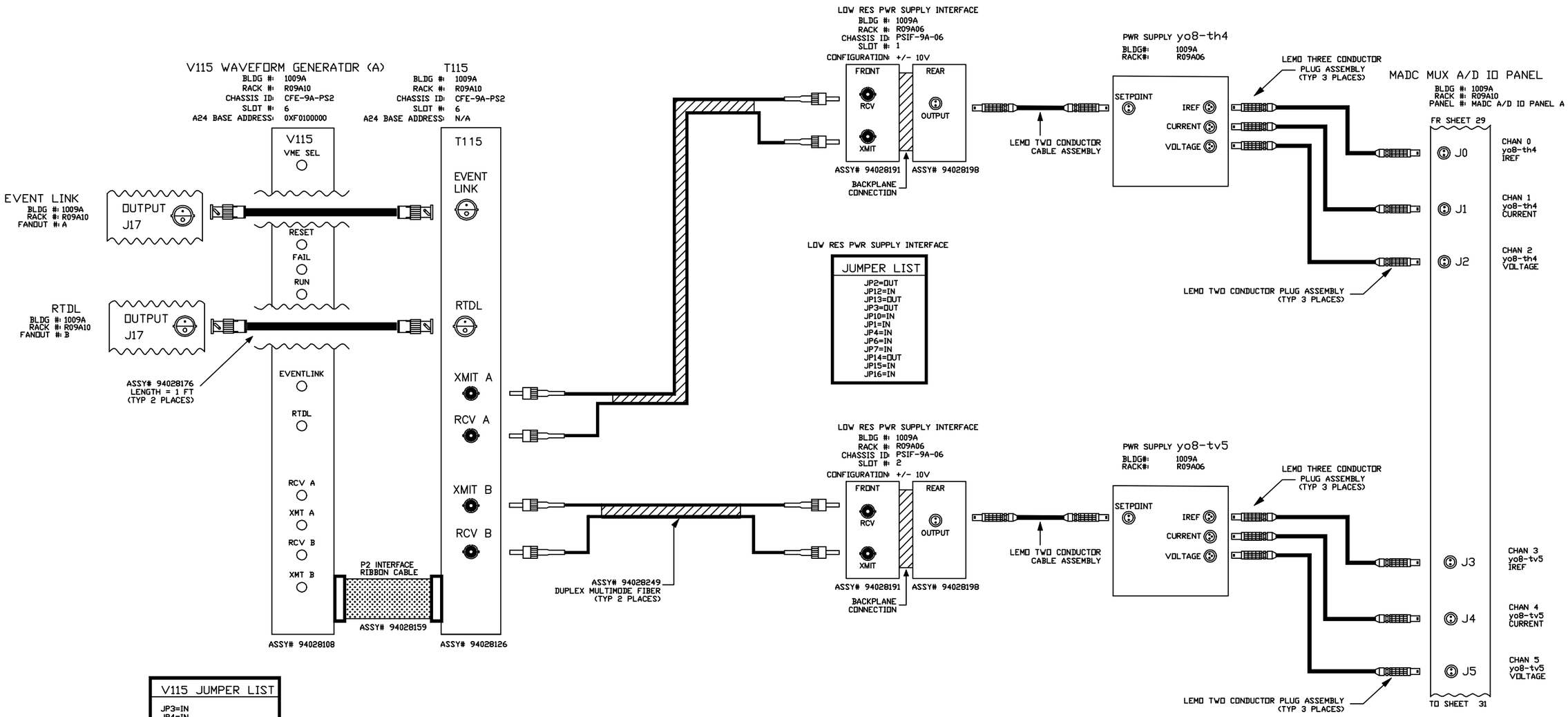

V115 JUMPER LIST
JP3=IN JP4=IN JP1=OUT JP2=OUT
A24 BASE ADDRESS JB1-A23=IN JB1-A22=IN JB1-A21=IN JB1-A20=OUT JB1-A19=IN JB1-A18=IN

-3	-2	-1	REF DESIGNATOR	ITEM NO.	DESCRIPTION	MAT'L DWG NO./BNL NO.
QTY REQD						

INTERPRET IN GENERAL ACCORDANCE WITH ASME Y14.24M-1989

UNLESS OTHERWISE SPECIFIED DIMENSIONS ARE IN INCHES

DECIMAL TOLERANCES
.X ±.030
.XX ±.015
.XXX ±.005
ANGULAR TOLERANCE
± .5°

NA FINISH

BREAK SHARP EDGES
MAX. XX MIN. XX

OUTSTANDING ECN

Q.A. CATEGORY A-3		DATE
DRAWN BY	Ed Koropsak	3/11/98
CHECKED BY		
DESIGN APPROVAL		
ENGINEER APPROVAL	R. MICHNOFF	3/11/98
SUPVR. APPROVAL		
NEXT ASSEMBLY		

BROOKHAVEN NATIONAL LABORATORY
UPTON, N.Y. 11973

RHIC CONTROLS WIRING DIAGRAM
ALCOVE 1009A, CFE-9A-PS2

POWER SUPPLY yo8-th4/yo8-tv5

SIZE D | DRAWING NUMBER 94028685 | REV. A

MATERIAL: ——— SCALE: NA WEIGHT: – SHEET 30 OF 53

*AUTOCAD

REV.	ZONE	ECN NO.	DATE	BY	CKR	APP.

CONTROLS- 3/2/01 11:05 AM 8685_31.dwg

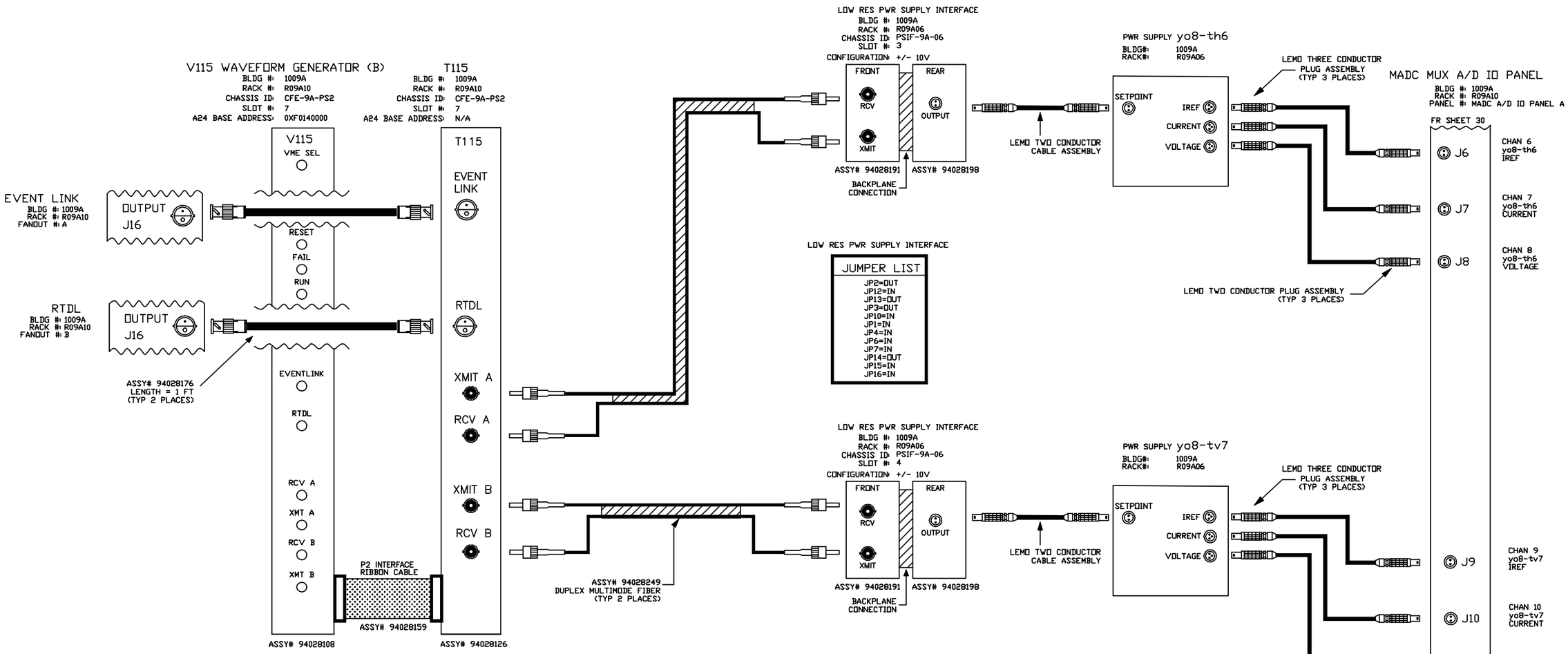

V115 JUMPER LIST
JP3=IN JP4=IN JP1=OUT JP2=OUT
A24 BASE ADDRESS JB1-A23=IN JB1-A22=IN JB1-A21=IN JB1-A20=OUT JB1-A19=IN JB1-A18=OUT

-3	-2	-1	REF DESIGNATOR	ITEM NO.	DESCRIPTION	MAT'L DWG NO./BNL NO.
QTY REQD						

INTERPRET IN GENERAL ACCORDANCE WITH ASME Y14.24M-1989

UNLESS OTHERWISE SPECIFIED DIMENSIONS ARE IN INCHES

DECIMAL TOLERANCES
.X ±.030
.XX ±.015
.XXX ±.005
ANGULAR TOLERANCE
± .5°

NA FINISH

BREAK SHARP EDGES
MAX. XX MIN. XX

OUTSTANDING ECN

Q.A. CATEGORY A-3		DATE
DRAWN BY	Ed Koropsak	3/11/98
CHECKED BY		
DESIGN APPROVAL		
ENGINEER APPROVAL	R. MICHNOFF	3/11/98
SUPVR. APPROVAL		

NEXT ASSEMBLY

BROOKHAVEN NATIONAL LABORATORY
UPTON, N.Y. 11973

RHIC CONTROLS WIRING DIAGRAM
ALCOVE 1009A, CFE-9A-PS2

POWER SUPPLY yo8-th6/yo8-tv7

SIZE D | DRAWING NUMBER 94028685 | REV. A

MATERIAL: ——— SCALE: NA WEIGHT: – SHEET 31 OF 53

1 *AUTOCAD

REV.	ZONE	ECN NO.	DATE	BY	CKR	APP.

CONTROLS- 6/17/03 2:42 PM 8685_32.dwg

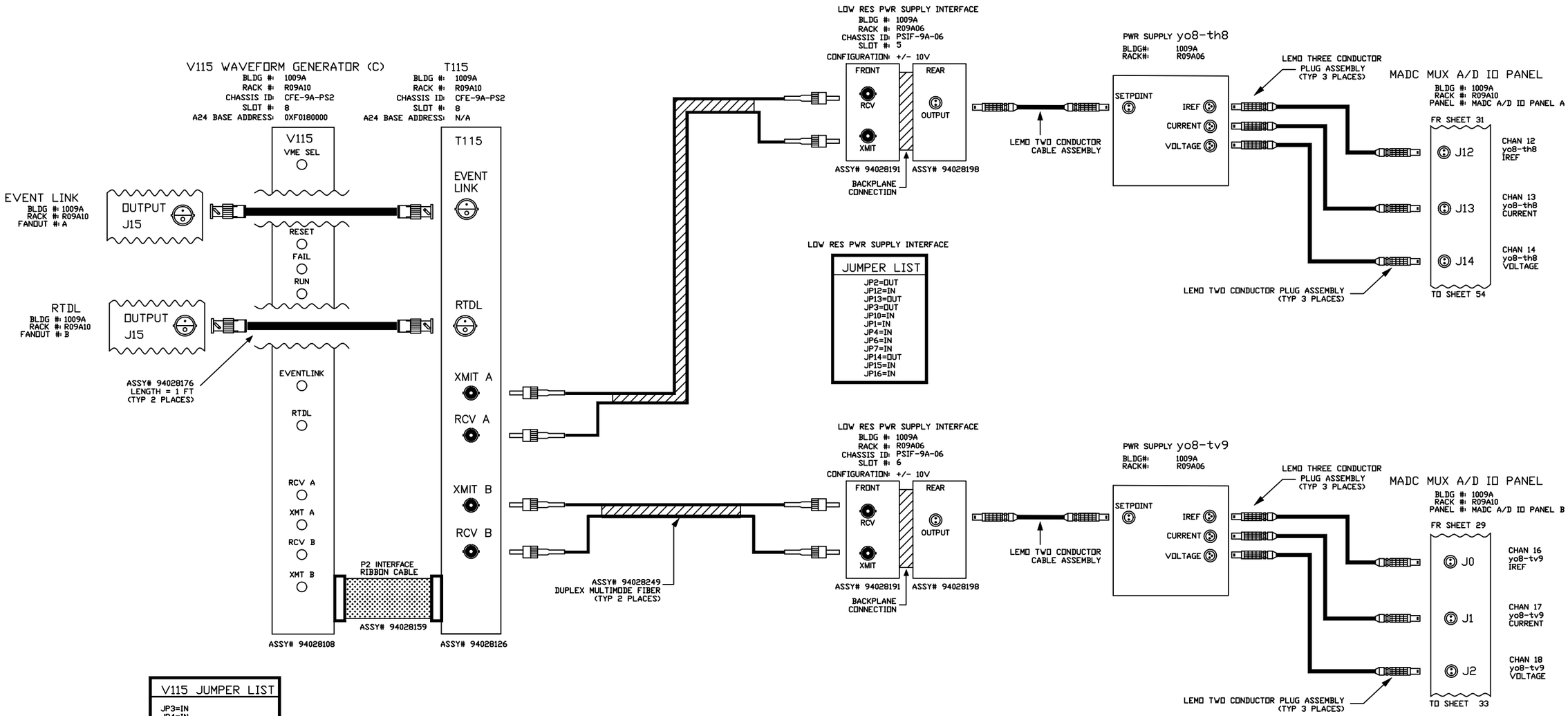

V115 JUMPER LIST
JP3=IN JP4=IN JP1=OUT JP2=OUT
A24 BASE ADDRESS JB1-A23=IN JB1-A22=IN JB1-A21=IN JB1-A20=OUT JB1-A19=OUT JB1-A18=IN

-3	-2	-1	REF DESIGNATOR	ITEM NO.	DESCRIPTION	MAT'L DWG NO./INL NO.
QTY REQD						

INTERPRET IN GENERAL ACCORDANCE WITH ASME Y14.24M-1989

UNLESS OTHERWISE SPECIFIED DIMENSIONS ARE IN INCHES

DECIMAL TOLERANCES
.X ±.030
.XX ±.015
.XXX ±.005
ANGULAR TOLERANCE
± .5°

NA FINISH

BREAK SHARP EDGES
MAX. XX MIN. XX

OUTSTANDING ECN

Q.A. CATEGORY A-3

		DATE
DRAWN BY	Ed Koropsak	3/11/98
CHECKED BY		
DESIGN APPROVAL		
ENGINEER APPROVAL	R. MICHNOFF	3/11/98
SUPVR. APPROVAL		

NEXT ASSEMBLY

BROOKHAVEN NATIONAL LABORATORY
UPTON, N.Y. 11973

RHIC CONTROLS WIRING DIAGRAM
ALCOVE 1009A, CFE-9A-PS2

POWER SUPPLY yo8-th8/yo8-tv9

SIZE D | DRAWING NUMBER 94028685 | REV. A

MATERIAL: ——— SCALE: NA WEIGHT: – SHEET 32

*AUTOCAD

REV.	ZONE	ECN NO.	DATE	BY	CKR	APP.

CONTROLS- 3/2/01 11:08 AM 8685_33.dwg

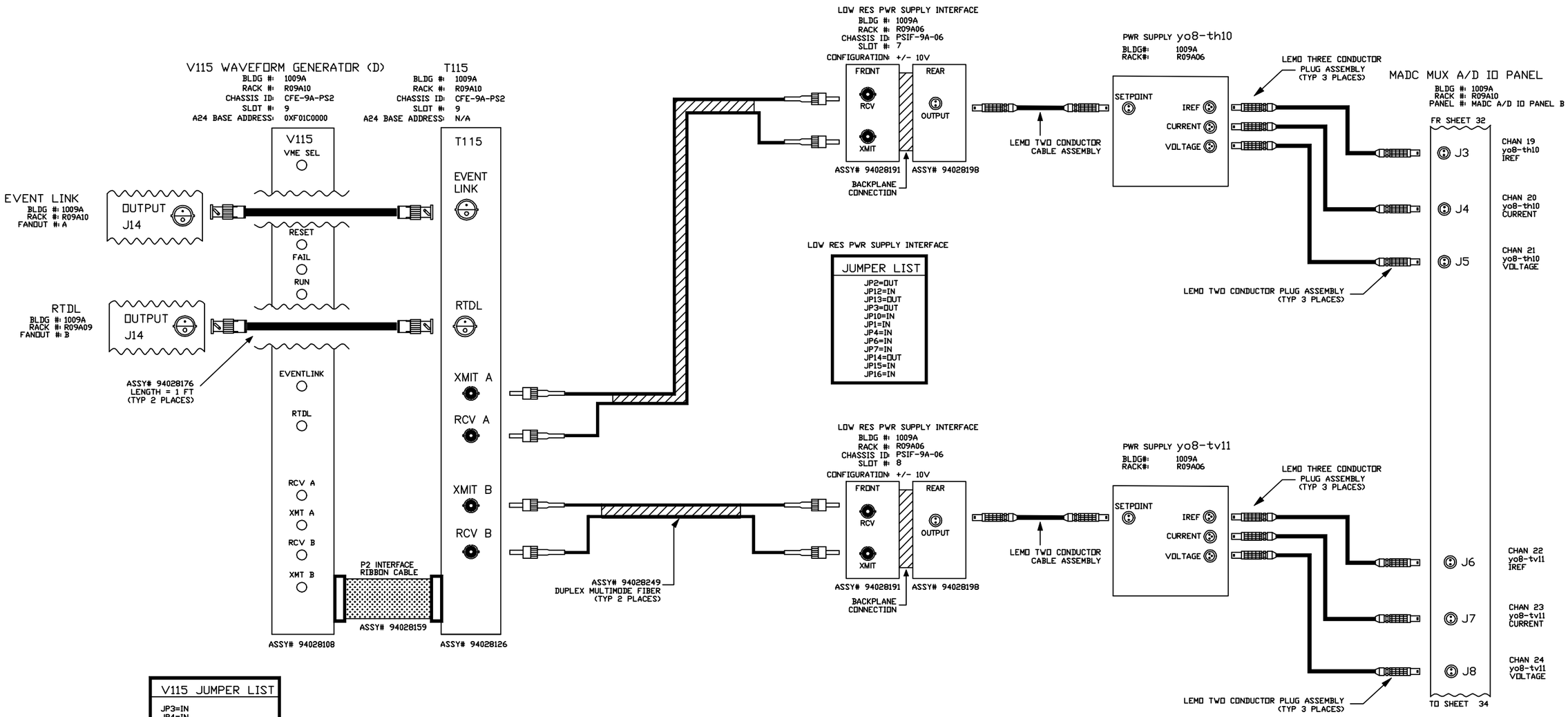

V115 JUMPER LIST
JP3=IN JP4=IN JP1=OUT JP2=OUT
A24 BASE ADDRESS JB1-A23=IN JB1-A22=IN JB1-A21=IN JB1-A20=OUT JB1-A19=OUT JB1-A18=OUT

-3	-2	-1	REF DESIGNATOR	ITEM NO.	DESCRIPTION	MAT'L DWG NO./BNL NO.
QTY REQD						

INTERPRET IN GENERAL ACCORDANCE WITH ASME Y14.24M-1989

UNLESS OTHERWISE SPECIFIED DIMENSIONS ARE IN INCHES

DECIMAL TOLERANCES
.X ±.030
.XX ±.015
.XXX ±.005
ANGULAR TOLERANCE
± .5°

NA FINISH

BREAK SHARP EDGES
MAX. XX MIN. XX

OUTSTANDING ECN

Q.A. CATEGORY A-3		DATE
DRAWN BY	Ed Koropsak	3/11/98
CHECKED BY		
DESIGN APPROVAL		
ENGINEER APPROVAL	R. MICHNOFF	3/11/98
SUPVR. APPROVAL		

NEXT ASSEMBLY

BROOKHAVEN NATIONAL LABORATORY
UPTON, N.Y. 11973

RHIC CONTROLS WIRING DIAGRAM
ALCOVE 1009A, CFE-9A-PS2

POWER SUPPLY yo8-th10/yo8-tv11

SIZE D | DRAWING NUMBER 94028685 | REV. A

MATERIAL: ——— SCALE: NA WEIGHT: – SHEET 33 OF 53

*AUTOCAD

REV.	ZONE	ECN NO.	DATE	BY	CKR	APP.

CONTROLS- 6/17/03 2:43 PM 8685_34.dwg

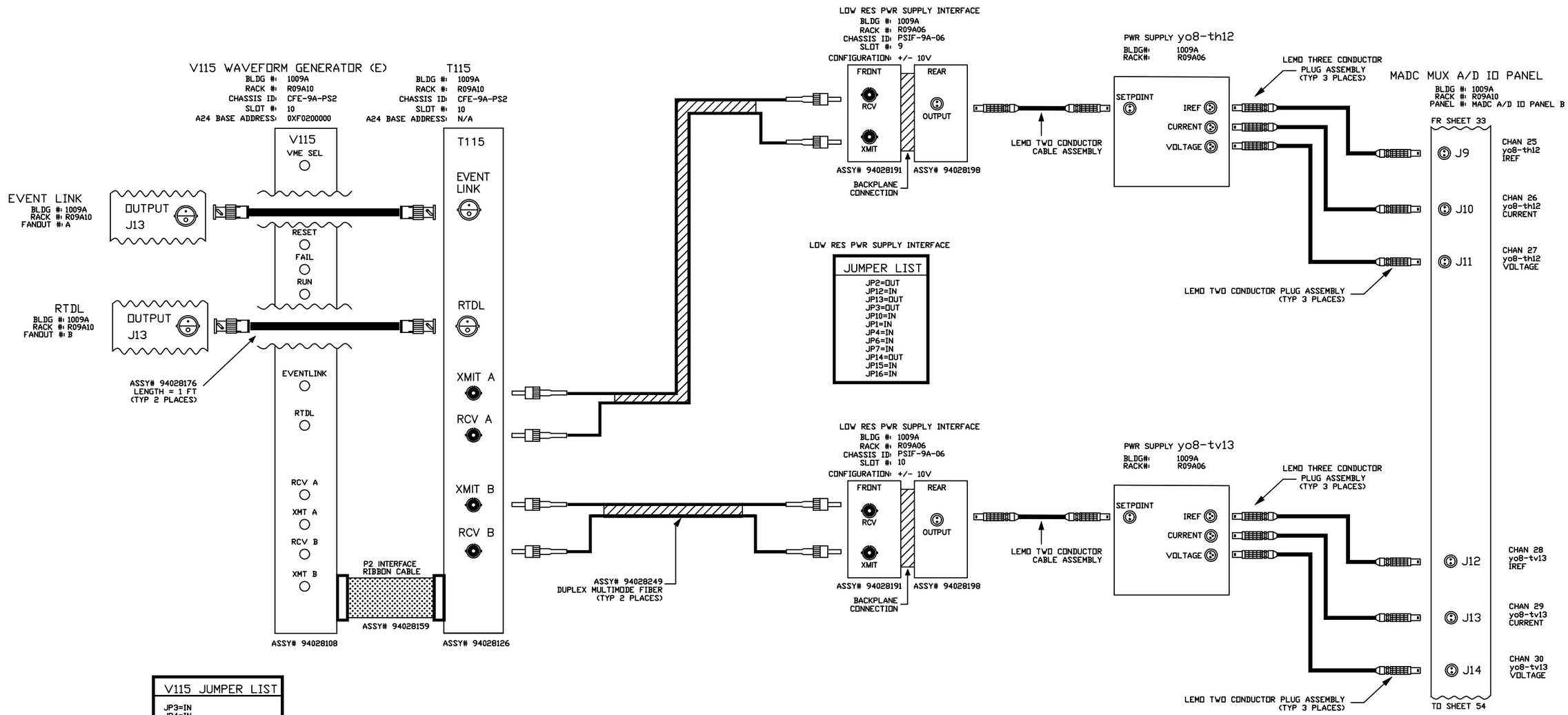

V115 JUMPER LIST
JP3=IN JP4=IN JP1=OUT JP2=OUT
A24 BASE ADDRESS JB1-A23=IN JB1-A22=IN JB1-A21=OUT JB1-A20=IN JB1-A19=IN JB1-A18=IN

-3	-2	-1	REF DESIGNATOR	ITEM NO.	DESCRIPTION	MAT'L DWG NO./INL NO.
QTY REQD						

INTERPRET IN GENERAL ACCORDANCE WITH ASME Y14.24M-1989

UNLESS OTHERWISE SPECIFIED DIMENSIONS ARE IN INCHES

DECIMAL TOLERANCES
.X ±.030
.XX ±.015
.XXX ±.005
ANGULAR TOLERANCE
± .5°

NA FINISH

BREAK SHARP EDGES
MAX. XX MIN. XX

OUTSTANDING ECN

Q.A. CATEGORY A-3

		DATE
DRAWN BY	Ed Koropsak	3/11/98
CHECKED BY		
DESIGN APPROVAL		
ENGINEER APPROVAL	R. MICHNOFF	3/11/98
SUPVR. APPROVAL		

NEXT ASSEMBLY

BROOKHAVEN NATIONAL LABORATORY
UPTON, N.Y. 11973

RHIC CONTROLS WIRING DIAGRAM
ALCOVE 1009A, CFE-9A-PS2
POWER SUPPLY yo8-th12/yo8-tv13

SIZE D
DRAWING NUMBER 94028685
REV. A

MATERIAL: ——— SCALE: NA WEIGHT: – SHEET 34

*AUTOCAD

REV.	ZONE	ECN NO.	DATE	BY	CKR	APP.

CONTROLS- 3/2/01 11:12 AM 8685_35.dwg

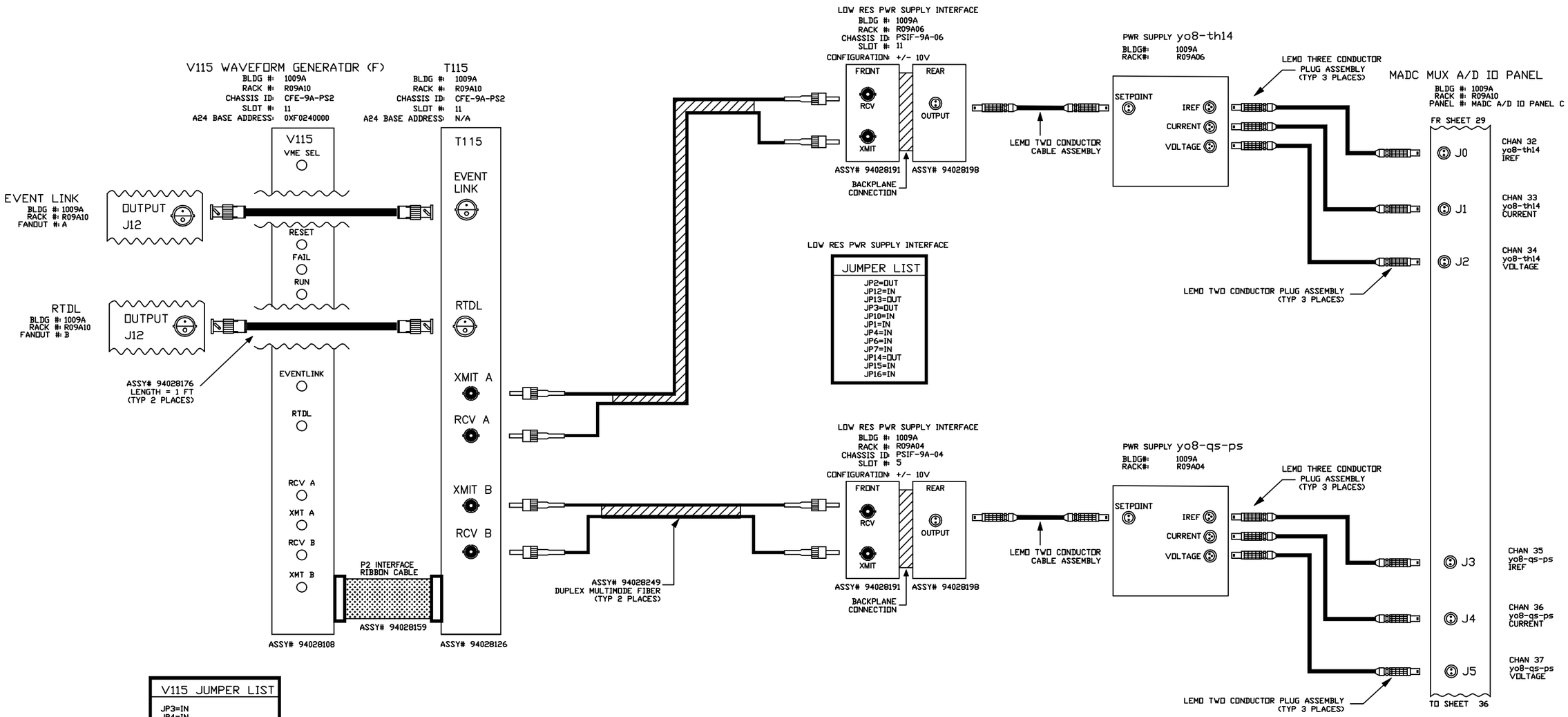

V115 JUMPER LIST
JP3=IN JP4=IN JP1=OUT JP2=OUT
A24 BASE ADDRESS JB1-A23=IN JB1-A22=IN JB1-A21=OUT JB1-A20=IN JB1-A19=IN JB1-A18=OUT

-3	-2	-1	REF DESIGNATOR	ITEM NO.	DESCRIPTION	MAT'L DWG NO./BNL NO.
QTY REQD						

INTERPRET IN GENERAL ACCORDANCE WITH ASME Y14.24M-1989

UNLESS OTHERWISE SPECIFIED DIMENSIONS ARE IN INCHES

DECIMAL TOLERANCES
.X ±.030
.XX ±.015
.XXX ±.005
ANGULAR TOLERANCE
± .5°

OUTSTANDING ECN

NA FINISH

BREAK SHARP EDGES
MAX. XX MIN. XX

Q.A. CATEGORY A-3		DATE
DRAWN BY	Ed Koropsak	3/11/98
CHECKED BY		
DESIGN APPROVAL		
ENGINEER APPROVAL	R. MICHNOFF	3/11/98
SUPVR. APPROVAL		

NEXT ASSEMBLY

BROOKHAVEN NATIONAL LABORATORY
UPTON, N.Y. 11973

RHIC CONTROLS WIRING DIAGRAM
ALCOVE 1009A, CFE-9A-PS2

PWR SUPPLY yo8-th14/yo8-qs-ps

SIZE D
DRAWING NUMBER 94028685
REV. A

MATERIAL: ——— SCALE: NA WEIGHT: – SHEET 35 OF 53

*AUTOCAD

REV.	ZONE	ECN NO.	DATE	BY	CKR	APP.

CONTROLS- 3/2/01 11:13 AM 8685_36.dwg

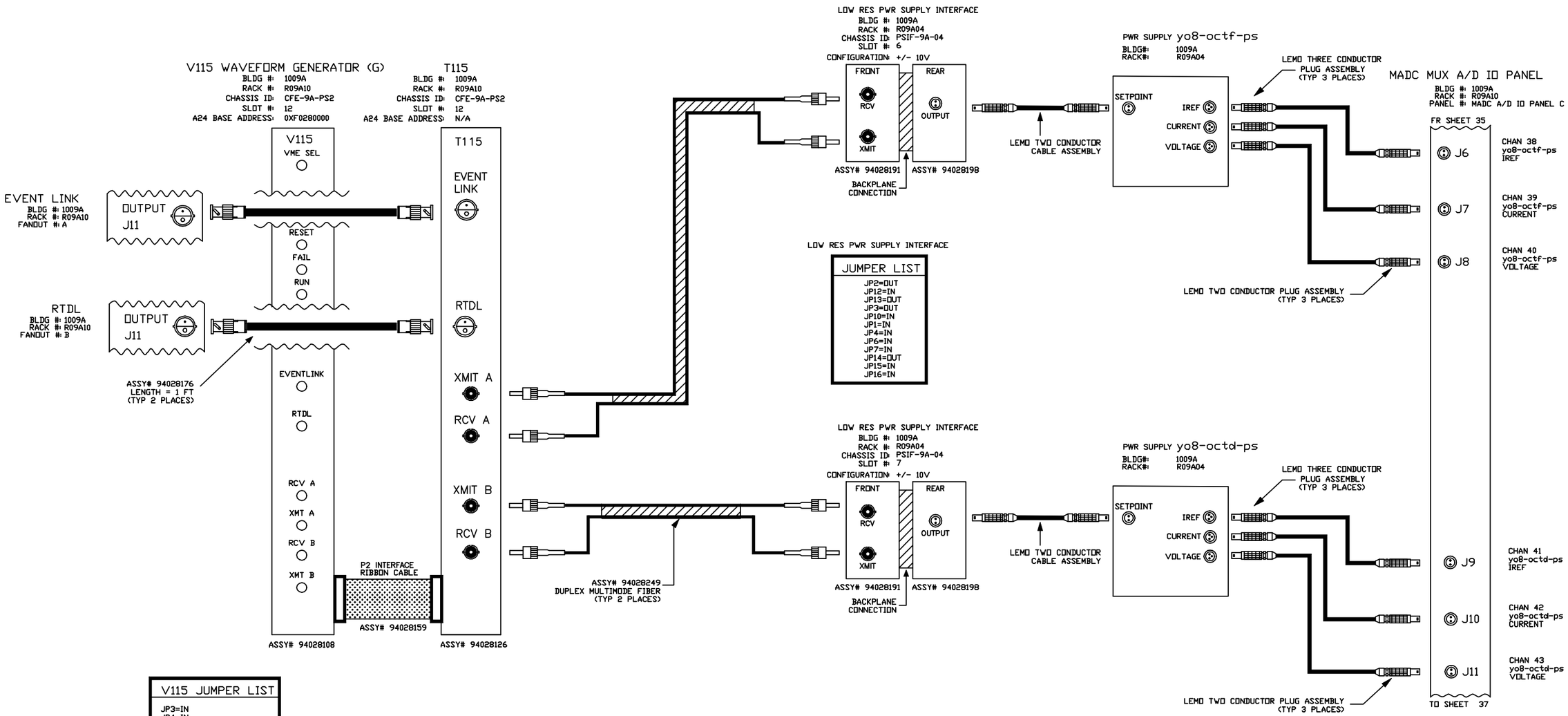

V115 JUMPER LIST
JP3=IN JP4=IN JP1=OUT JP2=OUT
A24 BASE ADDRESS JB1-A23=IN JB1-A22=IN JB1-A21=OUT JB1-A20=IN JB1-A19=OUT JB1-A18=IN

-3	-2	-1	REF DESIGNATOR	ITEM NO.	DESCRIPTION	MAT'L DWG NO./BNL NO.
QTY REQD						

INTERPRET IN GENERAL ACCORDANCE WITH ASME Y14.24M-1989

UNLESS OTHERWISE SPECIFIED DIMENSIONS ARE IN INCHES

DECIMAL TOLERANCES
.X ±.030
.XX ±.015
.XXX ±.005
ANGULAR TOLERANCE
± .5°

OUTSTANDING ECN

NA FINISH

BREAK SHARP EDGES
MAX. XX MIN. XX

Q.A. CATEGORY A-3		DATE
DRAWN BY	Ed Koropsak	3/11/98
CHECKED BY		
DESIGN APPROVAL		
ENGINEER APPROVAL	R. MICHNOFF	3/11/98
SUPVR. APPROVAL		

NEXT ASSEMBLY

BROOKHAVEN NATIONAL LABORATORY
UPTON, N.Y. 11973

RHIC CONTROLS WIRING DIAGRAM
ALCOVE 1009A, CFE-9A-PS2
PWRSPLY yo8-octf-ps/yo8-octd-ps

SIZE D
DRAWING NUMBER 94028685
REV. A

MATERIAL: ——— SCALE: NA WEIGHT: – SHEET 36 OF 53

1 *AUTOCAD

REV.	ZONE	ECN NO.	DATE	BY	CKR	APP.

CONTROLS- 3/2/01 11:15 AM 8685_37.dwg

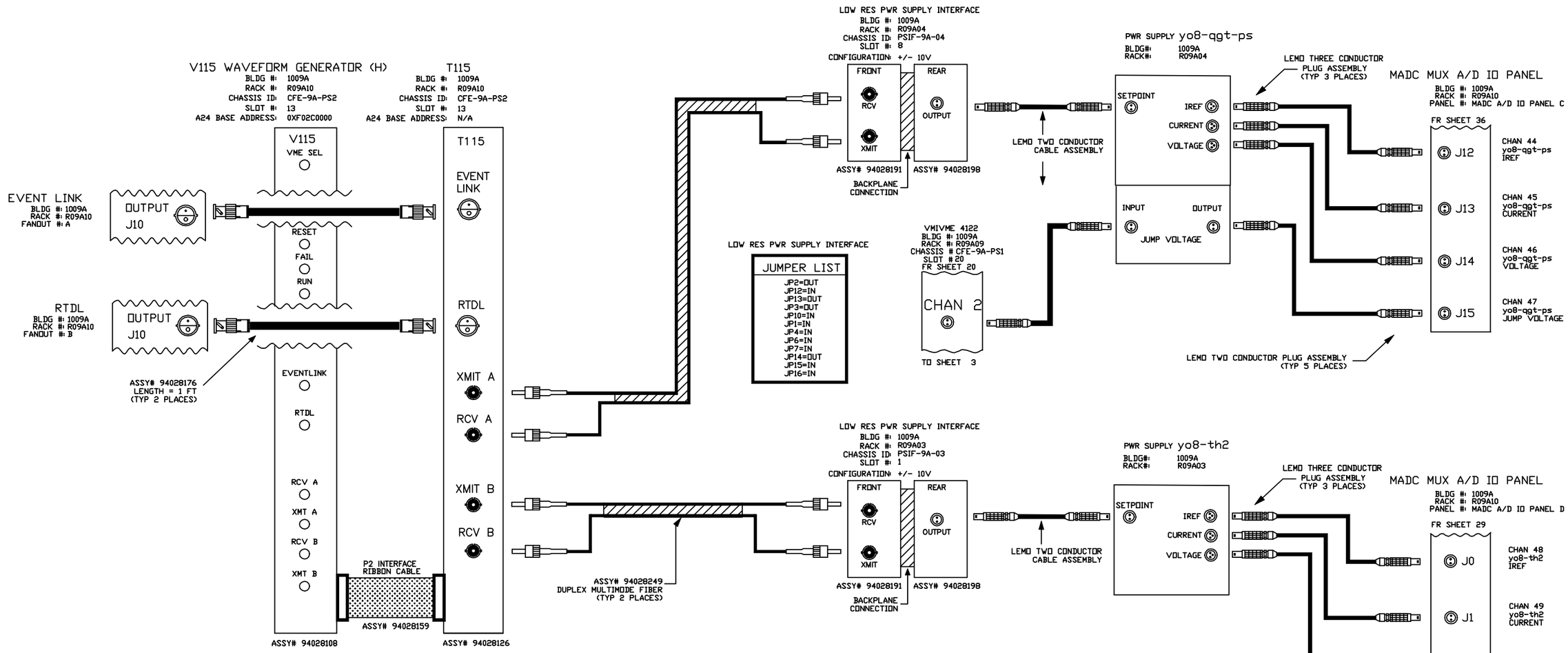

V115 JUMPER LIST
JP3=IN JP4=IN JP1=OUT JP2=OUT
A24 BASE ADDRESS JB1-A23=IN JB1-A22=IN JB1-A21=OUT JB1-A20=IN JB1-A19=OUT JB1-A18=OUT

-3	-2	-1	REF DESIGNATOR	ITEM NO.	DESCRIPTION	MAT'L DWG NO./BNL NO.
QTY REQD						

INTERPRET IN GENERAL ACCORDANCE WITH ASME Y14.24M-1989

UNLESS OTHERWISE SPECIFIED DIMENSIONS ARE IN INCHES

DECIMAL TOLERANCES
.X ±.030
.XX ±.015
.XXX ±.005
ANGULAR TOLERANCE
± .5°

NA FINISH

BREAK SHARP EDGES
MAX. XX MIN. XX

OUTSTANDING ECN

Q.A. CATEGORY A-3		DATE
DRAWN BY	Ed Koropsak	3/11/98
CHECKED BY		
DESIGN APPROVAL		
ENGINEER APPROVAL	R. MICHNOFF	3/11/98
SUPVR. APPROVAL		

NEXT ASSEMBLY

BROOKHAVEN NATIONAL LABORATORY
UPTON, N.Y. 11973

RHIC CONTROLS WIRING DIAGRAM
ALCOVE 1009A, CFE-9A-PS2
PWR SPLY yo8-qgt-ps/yo8-th2

SIZE D
DRAWING NUMBER 94028685
REV. A

MATERIAL: ——— SCALE: NA WEIGHT: – SHEET 37 OF 53

*AUTOCAD

REV.	ZONE	ECN NO.	DATE	BY	CKR	APP.

CONTROLS- 3/2/01 11:16 AM 8685_38.dwg

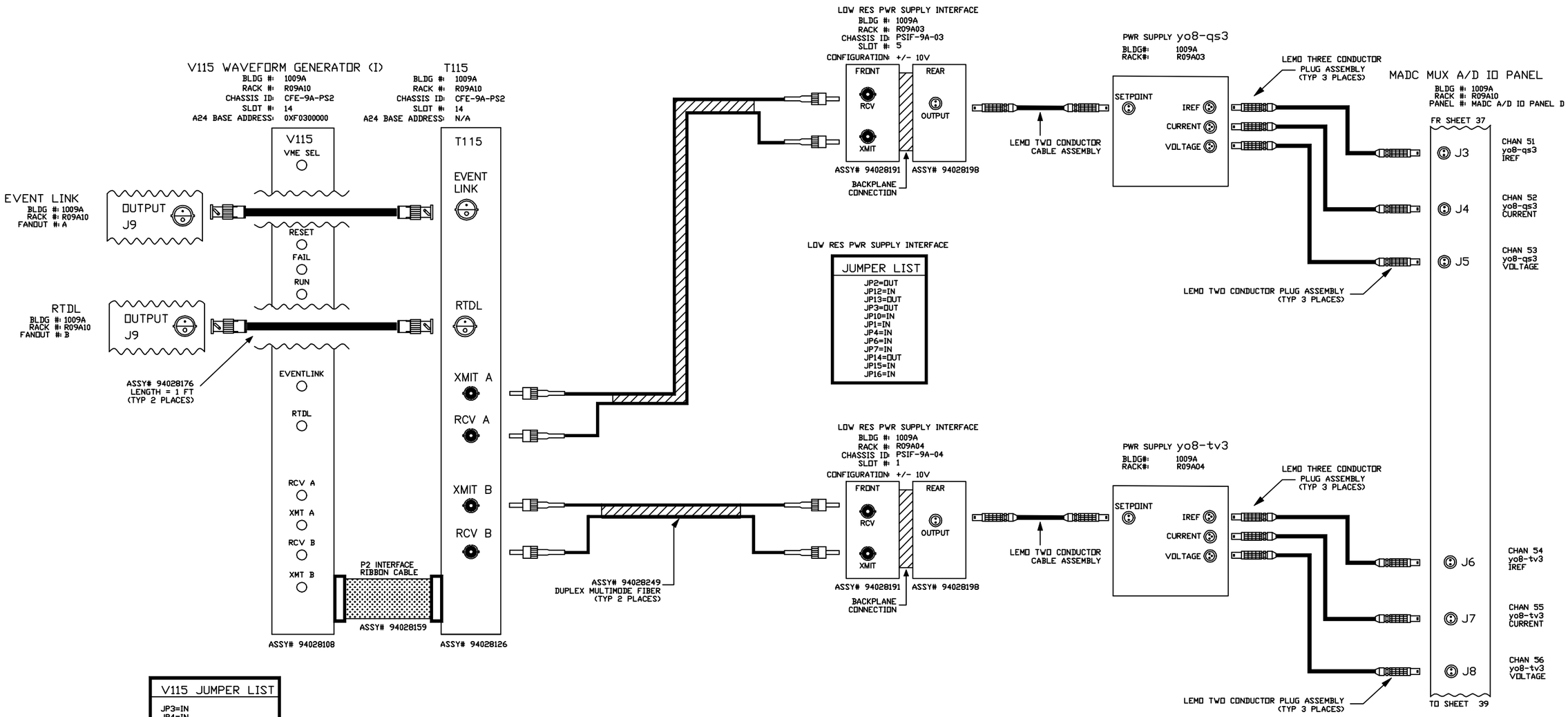

V115 JUMPER LIST
JP3=IN JP4=IN JP1=OUT JP2=OUT
A24 BASE ADDRESS JB1-A23=IN JB1-A22=IN JB1-A21=OUT JB1-A20=OUT JB1-A19=IN JB1-A18=IN

-3	-2	-1	REF DESIGNATOR	ITEM NO.	DESCRIPTION	MAT'L DWG NO./BNL NO.
QTY REQD						

INTERPRET IN GENERAL ACCORDANCE WITH ASME Y14.24M-1989

UNLESS OTHERWISE SPECIFIED DIMENSIONS ARE IN INCHES

DECIMAL TOLERANCES
.X ±.030
.XX ±.015
.XXX ±.005
ANGULAR TOLERANCE
± .5°

OUTSTANDING ECN

NA FINISH

BREAK SHARP EDGES
MAX. XX MIN. XX

Q.A. CATEGORY A-3		DATE
DRAWN BY	Ed Koropsak	3/11/98
CHECKED BY		
DESIGN APPROVAL		
ENGINEER APPROVAL	R. MICHNOFF	3/11/98
SUPVR. APPROVAL		

NEXT ASSEMBLY

BROOKHAVEN NATIONAL LABORATORY
UPTON, N.Y. 11973

RHIC CONTROLS WIRING DIAGRAM
ALCOVE 1009A, CFE-9A-PS2

POWER SUPPLY yo8-qs3/yo8-tv3

SIZE D | DRAWING NUMBER 94028685 | REV. A

MATERIAL: ——— SCALE: NA WEIGHT: – SHEET 38 OF 53

*AUTOCAD

REV.	ZONE	ECN NO.	DATE	BY	CKR	APP.

CONTROLS- 6/17/03 2:45 PM 8685_39.dwg

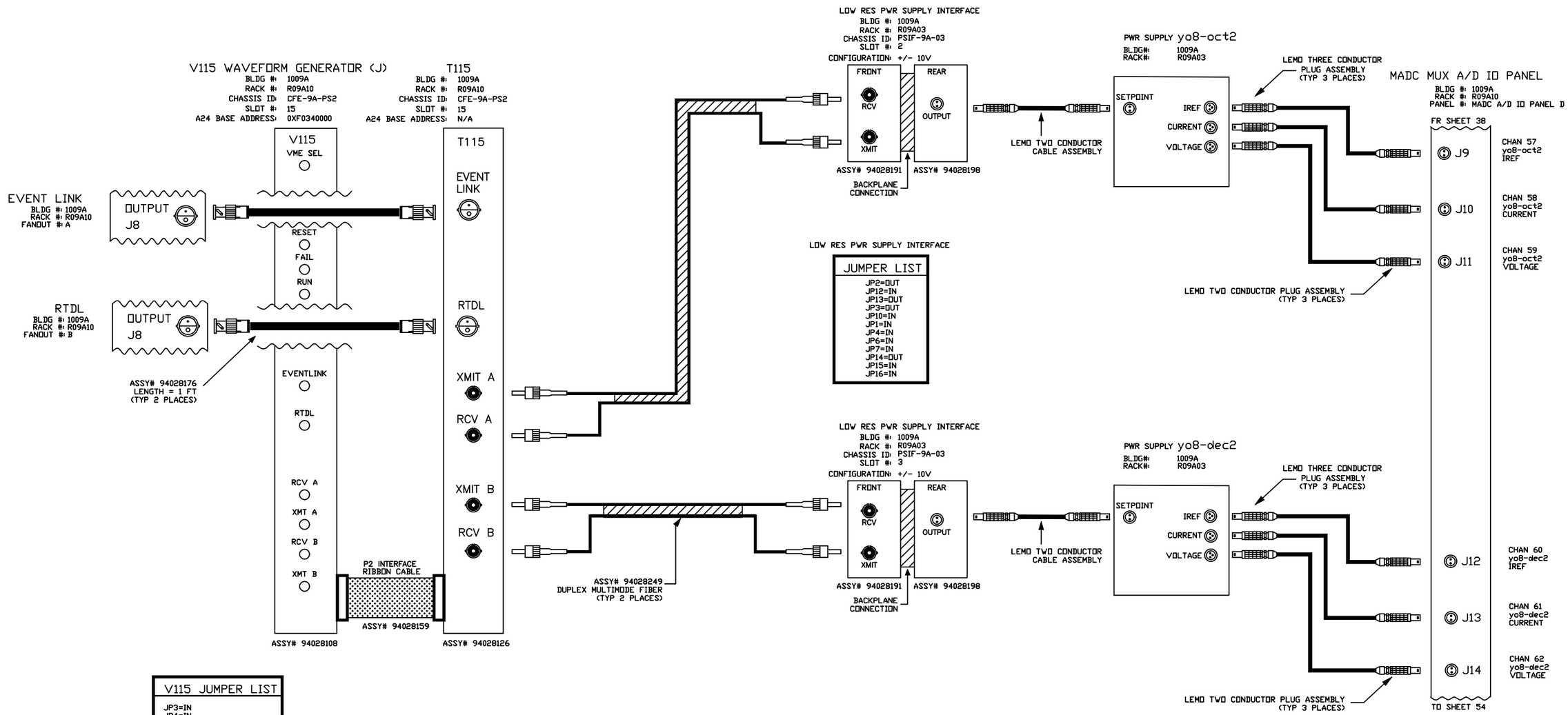

V115 JUMPER LIST
JP3=IN JP4=IN JP1=OUT JP2=OUT
A24 BASE ADDRESS JB1-A23=IN JB1-A22=IN JB1-A21=OUT JB1-A20=OUT JB1-A19=IN JB1-A18=OUT

-3	-2	-1	REF DESIGNATOR	ITEM NO.	DESCRIPTION	MAT'L DWG NO./BNL NO.
QTY REQD						

INTERPRET IN GENERAL ACCORDANCE WITH ASME Y14.24M-1989	Q.A. CATEGORY A-3	DATE	BROOKHAVEN NATIONAL LABORATORY
	DRAWN BY Ed Koropsak	3/11/98	UPTON, N.Y. 11973
UNLESS OTHERWISE SPECIFIED DIMENSIONS ARE IN INCHES	CHECKED BY		RHIC CONTROLS WIRING DIAGRAM
DECIMAL TOLERANCES .X ±.030 .XX ±.015 .XXX ±.005 ANGULAR TOLERANCE ± .5°	DESIGN APPROVAL		ALCOVE 1009A, CFE-9A-PS2
	ENGINEER APPROVAL R. MICHNOFF	3/11/98	POWER SUPPLY yo8-oct2/yo8-dec2
	SUPVR. APPROVAL		SIZE D / DRAWING NUMBER 94028685 / REV. A
NA FINISH / BREAK SHARP EDGES MAX. XX MIN. XX	NEXT ASSEMBLY		MATERIAL: ——— SCALE: NA WEIGHT: – SHEET 39
OUTSTANDING ECN			

1 *AUTOCAD

REV.	ZONE	ECN NO.	DATE	BY	CKR	APP.

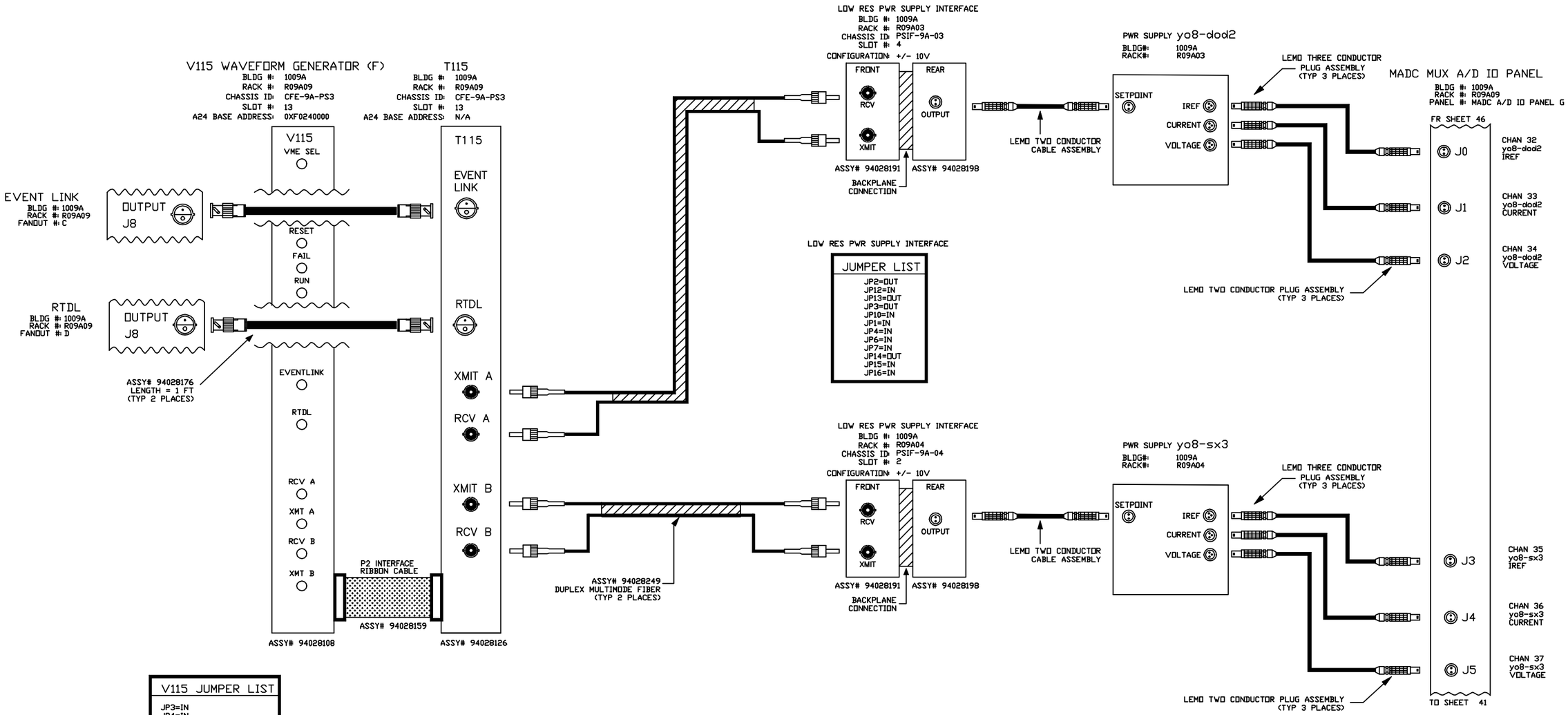

V115 JUMPER LIST
JP3=IN JP4=IN JP1=OUT JP2=OUT
A24 BASE ADDRESS JB1-A23=IN JB1-A22=IN JB1-A21=OUT JB1-A20=IN JB1-A19=IN JB1-A18=OUT

-3	-2	-1	REF DESIGNATOR	ITEM NO.	DESCRIPTION	MAT'L DWG NO./BNL NO.
QTY REQD						

INTERPRET IN GENERAL ACCORDANCE WITH ASME Y14.24M-1989

UNLESS OTHERWISE SPECIFIED DIMENSIONS ARE IN INCHES

DECIMAL TOLERANCES
.X ±.030
.XX ±.015
.XXX ±.005
ANGULAR TOLERANCE
± .5°

NA FINISH

BREAK SHARP EDGES
MAX. XX MIN. XX

OUTSTANDING ECN

Q.A. CATEGORY A-3		DATE
DRAWN BY	Ed Koropsak	3/11/98
CHECKED BY		
DESIGN APPROVAL		
ENGINEER APPROVAL	R. MICHNOFF	3/11/98
SUPVR. APPROVAL		

NEXT ASSEMBLY

BROOKHAVEN NATIONAL LABORATORY
UPTON, N.Y. 11973

RHIC CONTROLS WIRING DIAGRAM
ALCOVE 1009A, CFE-9A-PS3

POWER SUPPLY yo8-dod2/yo8-sx3

SIZE D | DRAWING NUMBER 94028685 | REV. A

MATERIAL: ——— SCALE: NA WEIGHT: – SHEET 40 OF 53

*AUTOCAD

REV.	ZONE	ECN NO.	DATE	BY	CKR	APP.

CONTROLS- 3/2/01 11:23 AM 8685_41.dwg

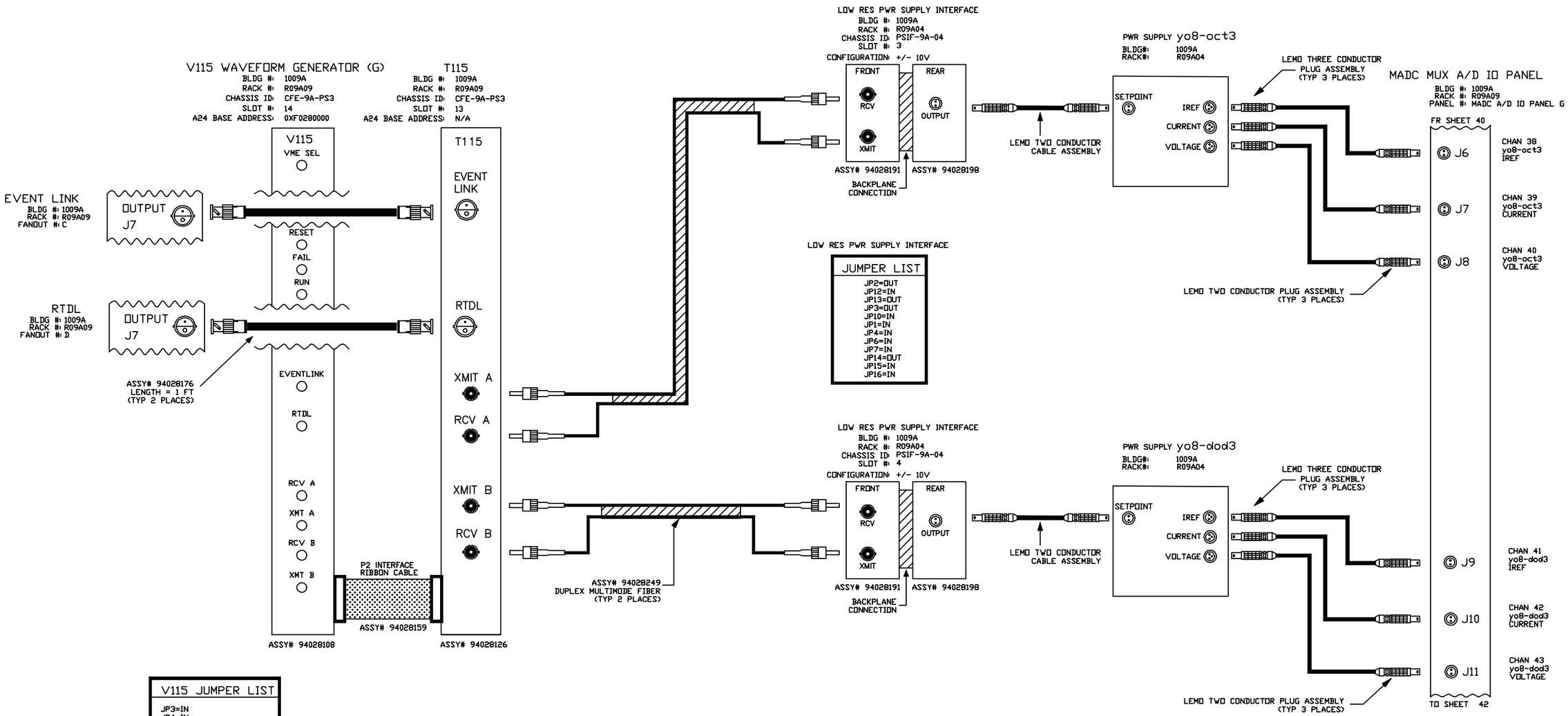

V115 JUMPER LIST
JP3=IN JP4=IN JP1=OUT JP2=OUT
A24 BASE ADDRESS JB1-A23=IN JB1-A22=IN JB1-A21=OUT JB1-A20=IN JB1-A19=OUT JB1-A18=IN

-3	-2	-1	REF DESIGNATOR	ITEM NO.	DESCRIPTION	MAT'L DWG NO./BNL NO.
QTY REQD						

INTERPRET IN GENERAL ACCORDANCE WITH ASME Y14.24M-1989

UNLESS OTHERWISE SPECIFIED DIMENSIONS ARE IN INCHES

DECIMAL TOLERANCES
.X ±.030
.XX ±.015
.XXX ±.005
ANGULAR TOLERANCE
± .5°

OUTSTANDING ECN

NA FINISH

BREAK SHARP EDGES
MAX. XX MIN. XX

Q.A. CATEGORY A-3		DATE
DRAWN BY	Ed Koropsak	3/11/98
CHECKED BY		
DESIGN APPROVAL		
ENGINEER APPROVAL	R. MICHNOFF	3/11/98
SUPVR. APPROVAL		

NEXT ASSEMBLY

BROOKHAVEN NATIONAL LABORATORY
UPTON, N.Y. 11973

RHIC CONTROLS WIRING DIAGRAM

ALCOVE 1009A, CFE-9A-PS3

PWRSPLY yo8-oct3/yo8-dod3

SIZE D | DRAWING NUMBER 94028685 | REV. A

MATERIAL: ——— SCALE: NA WEIGHT: – SHEET 41 OF 53

1 *AUTOCAD

REV.	ZONE	ECN NO.	DATE	BY	CKR	APP.

CONTROLS- 6/17/03 2:46 PM 8685_42.dwg

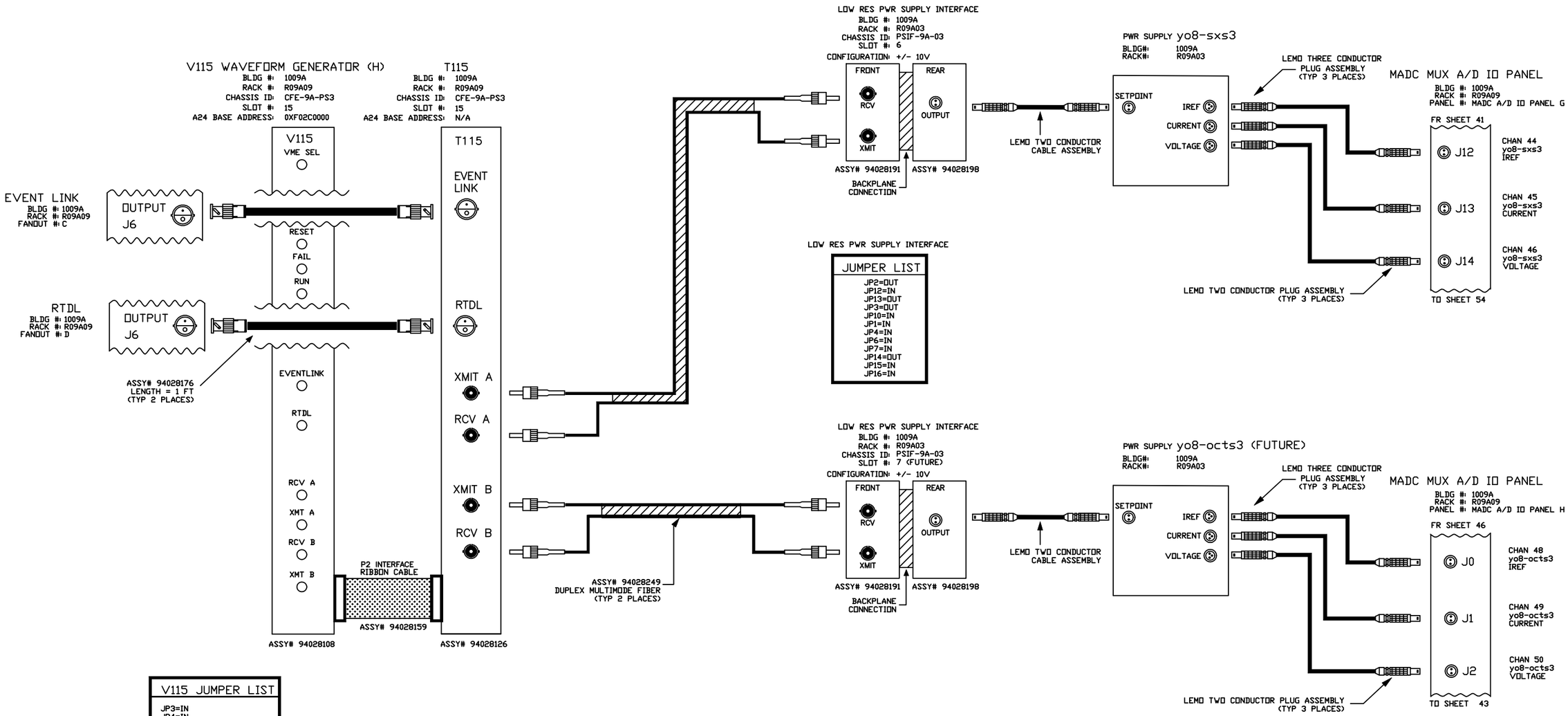

V115 JUMPER LIST
JP3=IN JP4=IN JP1=OUT JP2=OUT
A24 BASE ADDRESS JB1-A23=IN JB1-A22=IN JB1-A21=OUT JB1-A20=IN JB1-A19=OUT JB1-A18=OUT

-3	-2	-1	REF DESIGNATOR	ITEM NO.	DESCRIPTION	MAT'L DWG NO./INL NO.
QTY REQD						

INTERPRET IN GENERAL ACCORDANCE WITH ASME Y14.24M-1989	Q.A. CATEGORY A-3	DATE	BROOKHAVEN NATIONAL LABORATORY
	DRAWN BY Ed Koropsak	3/11/98	UPTON, N.Y. 11973
UNLESS OTHERWISE SPECIFIED DIMENSIONS ARE IN INCHES	CHECKED BY		RHIC CONTROLS WIRING DIAGRAM
DECIMAL TOLERANCES .X ±.030 .XX ±.015 .XXX ±.005 ANGULAR TOLERANCE ± .5°	DESIGN APPROVAL		ALCOVE 1009A, CFE-9A-PS3
	ENGINEER APPROVAL R. MICHNOFF	3/11/98	PWR SPLY yo8-sxs3/yo8-octs3
	SUPVR. APPROVAL		SIZE D / 94028685 / REV. A
NA FINISH / BREAK SHARP EDGES MAX. XX MIN. XX	NEXT ASSEMBLY		DRAWING NUMBER
OUTSTANDING ECN			MATERIAL: ——— SCALE: NA WEIGHT: – SHEET 42

*AUTOCAD

REV.	ZONE	ECN NO.	DATE	BY	CKR	APP.

CONTROLS- 6/2/03 2:39 PM 8685_43.dwg

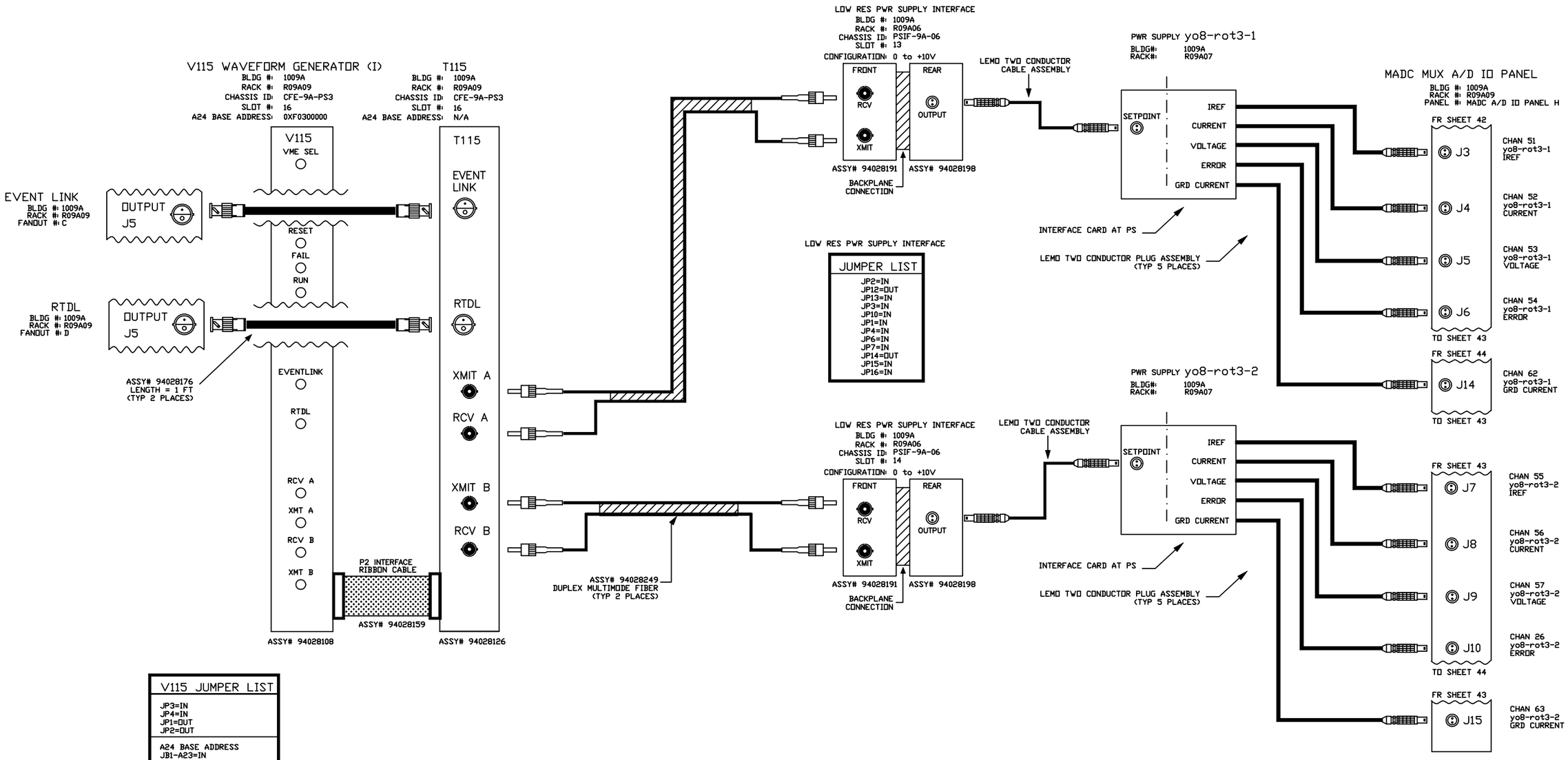

V115 JUMPER LIST
JP3=IN JP4=IN JP1=OUT JP2=OUT
A24 BASE ADDRESS JB1-A23=IN JB1-A22=IN JB1-A21=OUT JB1-A20=OUT JB1-A19=IN JB1-A18=IN

-3	-2	-1	REF DESIGNATOR	ITEM NO.	DESCRIPTION	MAT'L DWG NO./INL NO.
QTY REQD						

INTERPRET IN GENERAL ACCORDANCE WITH ASME Y14.24M-1989	Q.A. CATEGORY A-3	DATE	BROOKHAVEN NATIONAL LABORATORY
	DRAWN BY Ed Koropsak	3/11/98	UPTON, N.Y. 11973
UNLESS OTHERWISE SPECIFIED DIMENSIONS ARE IN INCHES	CHECKED BY		RHIC CONTROLS WIRING DIAGRAM
DECIMAL TOLERANCES .X ±.030 .XX ±.015 .XXX ±.005 ANGULAR TOLERANCE ± .5°	DESIGN APPROVAL		ALCOVE 1009A, CFE-9A-PS3
	ENGINEER APPROVAL R. MICHNOFF	3/11/98	PWRSPLY yo8-rot3-1/yo8-rot3-2
	SUPVR. APPROVAL		SIZE D / 94028685 / REV. A
NA FINISH / BREAK SHARP EDGES MAX. XX MIN. XX	NEXT ASSEMBLY		DRAWING NUMBER
OUTSTANDING ECN			MATERIAL: ——— SCALE: NA WEIGHT: – SHEET 43

*AUTOCAD

CONTROLS- 6/9/03 11:36 AM 8685_44.dwg

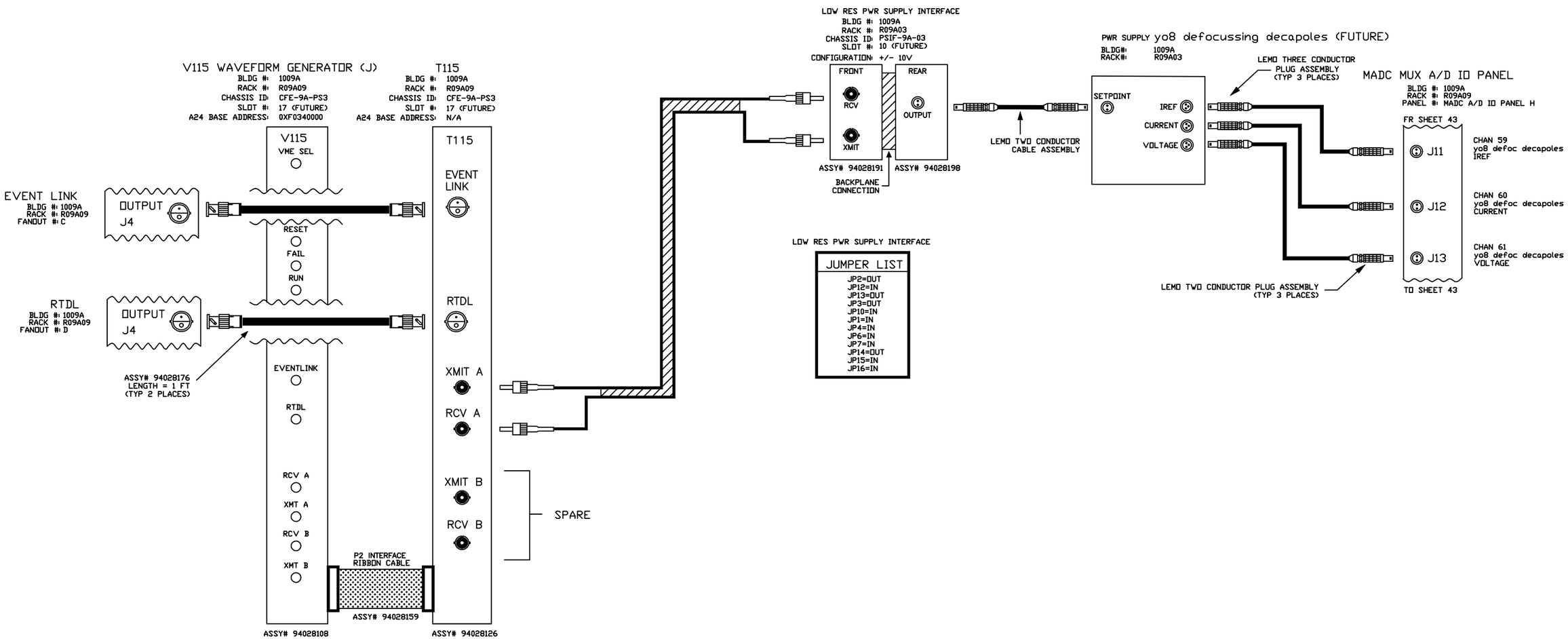

V115 JUMPER LIST
JP3=IN JP4=IN JP1=OUT JP2=OUT
A24 BASE ADDRESS JB1-A23=IN JB1-A22=IN JB1-A21=OUT JB1-A20=OUT JB1-A19=IN JB1-A18=OUT

-3	-2	-1	REF DESIGNATOR	ITEM NO.	DESCRIPTION	MAT'L. DWG NO./INL NO.
QTY REQD						

INTERPRET IN GENERAL ACCORDANCE WITH ASME Y14.24M-1989

UNLESS OTHERWISE SPECIFIED DIMENSIONS ARE IN INCHES

DECIMAL TOLERANCES
.X ±.030
.XX ±.015
.XXX ±.005
ANGULAR TOLERANCE
± .5°

NA FINISH

BREAK SHARP EDGES
MAX. XX MIN. XX

OUTSTANDING ECN

Q.A. CATEGORY A-3

		DATE
DRAWN BY	Ed Koropsak	3/11/98
CHECKED BY		
DESIGN APPROVAL		
ENGINEER APPROVAL	R. MICHNOFF	3/11/98
SUPVR. APPROVAL		

NEXT ASSEMBLY

BROOKHAVEN NATIONAL LABORATORY
UPTON, N.Y. 11973

RHIC CONTROLS WIRING DIAGRAM
ALCOVE 1009A, CFE-9A-PS3
PWR SPLY yo8 defoc decapoles

SIZE D | DRAWING NUMBER 94028685 | REV. A

MATERIAL: ——— SCALE: NA WEIGHT: – SHEET 44

*AUTOCAD

REV.	ZONE	ECN NO.	DATE	BY	CKR	APP.

CONTROLS- 6/17/03 2:48 PM 8685_45.dwg

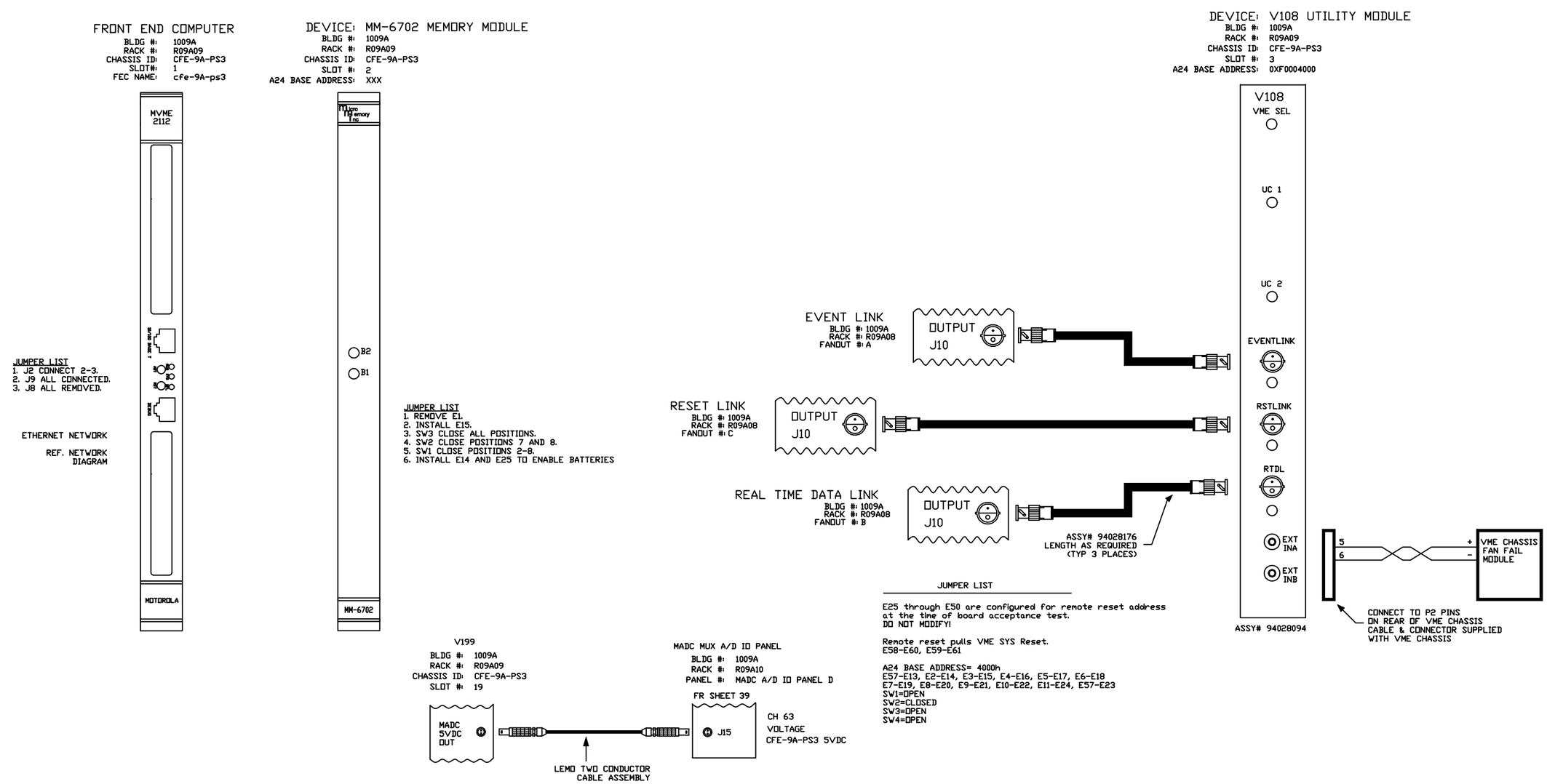

-3	-2	-1	REF DESIGNATOR	ITEM NO.	DESCRIPTION	MAT'L DWG NO./INL NO.
QTY REQD						

INTERPRET IN GENERAL ACCORDANCE WITH ASME Y14.24M-1989	Q.A. CATEGORY A-3	DATE	BROOKHAVEN NATIONAL LABORATORY UPTON, N.Y. 11973	
	DRAWN BY Venegas	8/12/99		
UNLESS OTHERWISE SPECIFIED DIMENSIONS ARE IN INCHES	CHECKED BY		RHIC CONTROLS WIRING DIAGRAM	
DECIMAL TOLERANCES .X ±.030 .XX ±.015 .XXX ±.005 ANGULAR TOLERANCE ± .5°	DESIGN APPROVAL		ALCOVE 1009A, VME CHASSIS CFE-9A-PS3	
	ENGINEER APPROVAL R. MICHNOFF	10/21/97	CPU/MEMORY /V108 UTIL MODULE	
	SUPVR. APPROVAL		SIZE D	REV. A
NA FINISH	BREAK SHARP EDGES MAX. XX MIN. XX	NEXT ASSEMBLY	94028685 DRAWING NUMBER	
OUTSTANDING ECN			MATERIAL: ——— SCALE: NA WEIGHT: – SHEET 45	

1 *AUTOCAD

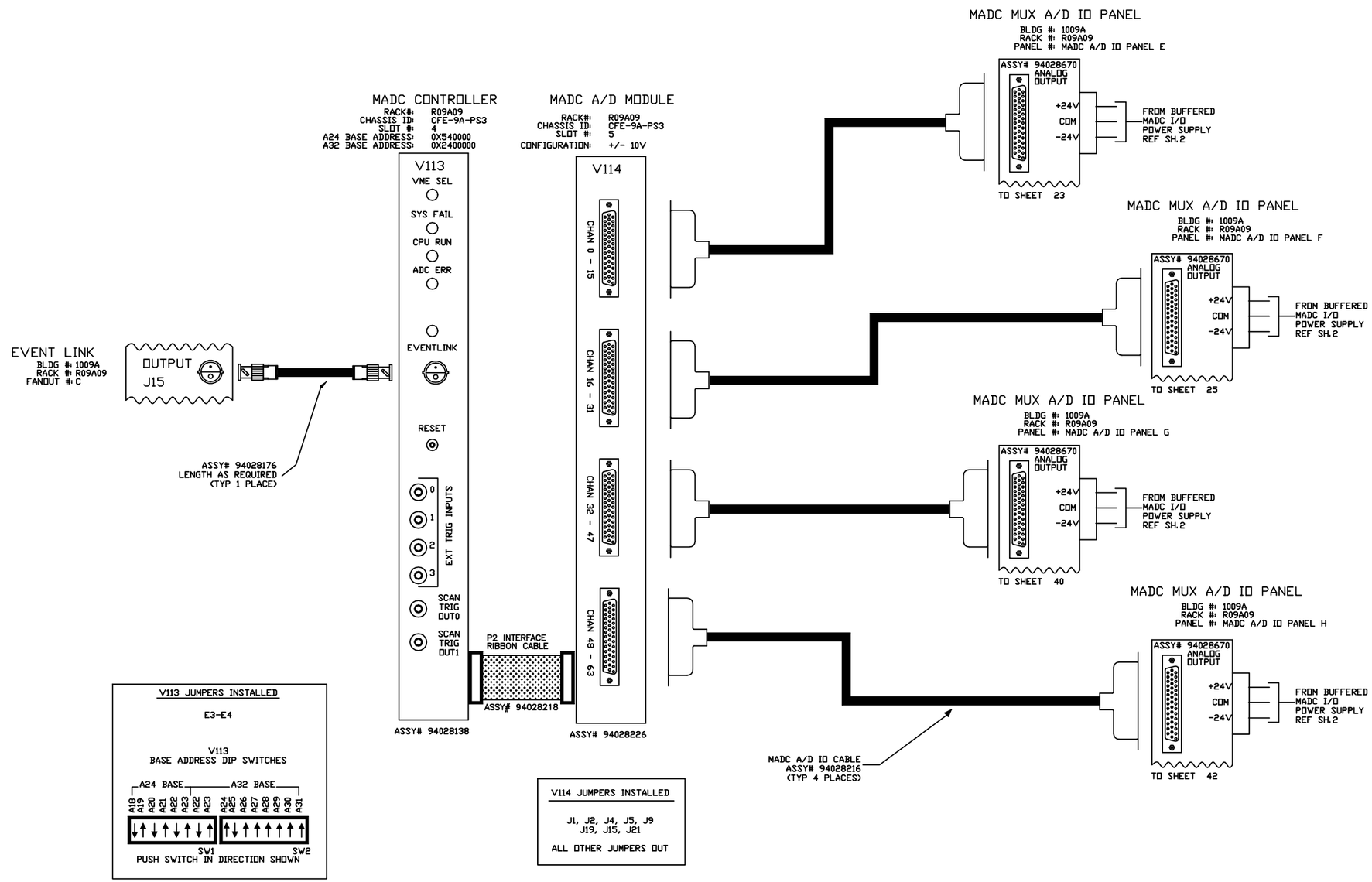

REV.	ZONE	ECN NO.	DATE	BY	CKR	APP.

-3	-2	-1	REF DESIGNATOR	ITEM NO.	DESCRIPTION	MAT'L DWG NO./BNL NO.
QTY REQD						

INTERPRET IN GENERAL ACCORDANCE WITH ASME Y14.24M-1989

UNLESS OTHERWISE SPECIFIED DIMENSIONS ARE IN INCHES

DECIMAL TOLERANCES
.X ±.030
.XX ±.015
.XXX ±.005
ANGULAR TOLERANCE
± .5°

NA FINISH

BREAK SHARP EDGES
MAX. XX MIN. XX

OUTSTANDING ECN

Q.A. CATEGORY A-3		DATE
DRAWN BY	Ed Koropsak	3/11/98
CHECKED BY		
DESIGN APPROVAL		
ENGINEER APPROVAL	R. MICHNOFF	3/11/98
SUPVR. APPROVAL		

NEXT ASSEMBLY

BROOKHAVEN NATIONAL LABORATORY
UPTON, N.Y. 11973

RHIC CONTROLS WIRING DIAGRAM

ALCOVE 1009A, VME CHASSIS CFE-9A-PS3

MADC SYSTEM

SIZE D | DRAWING NUMBER 94028685 | REV. A

MATERIAL: ——— SCALE: NA WEIGHT: – SHEET 46 OF 52

*AUTOCAD

REV.	ZONE	ECN NO.	DATE	BY	CKR	APP.

CONTROLS- 3/2/01 1:15 PM 8685_47.dwg

-3	-2	-1	REF DESIGNATOR	ITEM NO.	DESCRIPTION	MAT'L DWG NO.,BNL NO.
QTY REQD						

INTERPRET IN GENERAL ACCORDANCE WITH ASME Y14.24M-1989

UNLESS OTHERWISE SPECIFIED DIMENSIONS ARE IN INCHES

DECIMAL TOLERANCES
.X ±.030
.XX ±.015
.XXX ±.005
ANGULAR TOLERANCE
± .5°

NA FINISH

BREAK SHARP EDGES
MAX. XX MIN. XX

OUTSTANDING ECN

Q.A. CATEGORY A-3		DATE
DRAWN BY	Ed Koropsak	3/11/98
CHECKED BY		
DESIGN APPROVAL		
ENGINEER APPROVAL	R. MICHNOFF	3/11/98
SUPVR. APPROVAL		

NEXT ASSEMBLY

BROOKHAVEN NATIONAL LABORATORY
UPTON, N.Y. 11973

RHIC CONTROLS WIRING DIAGRAM
ALCOVE 1009A CHASSIS CFE-9A-PS3

SIZE D | DRAWING NUMBER 94028685 | REV. A

MATERIAL: ——— | SCALE: NA | WEIGHT: – | SHEET 47 OF 53

1 *AUTOCAD

REV.	ZONE	ECN NO.	DATE	BY	CKR	APP.

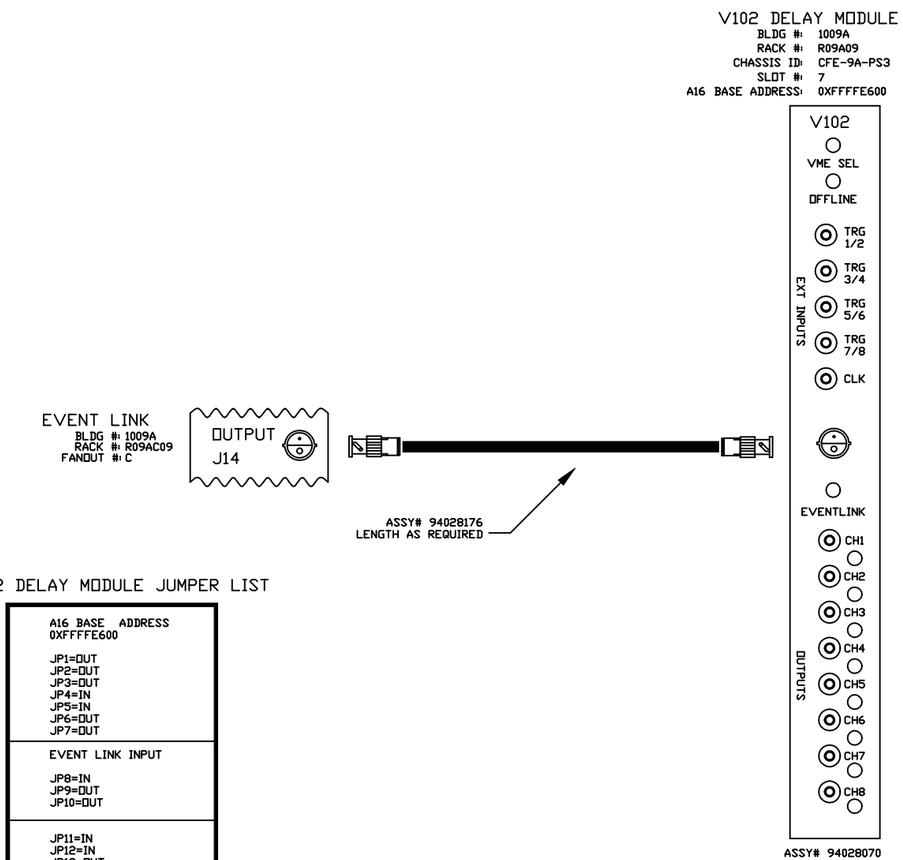

V102 DELAY MODULE JUMPER LIST

A16 BASE ADDRESS 0XFFFFE600 JP1=OUT JP2=OUT JP3=OUT JP4=IN JP5=IN JP6=OUT JP7=OUT
EVENT LINK INPUT JP8=IN JP9=OUT JP10=OUT
JP11=IN JP12=IN JP13=OUT JP14=IN

-3	-2	-1	REF DESIGNATOR	ITEM NO.	DESCRIPTION	MAT'L DWG NO.,BNL NO.
QTY REQD						

INTERPRET IN GENERAL ACCORDANCE WITH ASME Y14.24M-1989

UNLESS OTHERWISE SPECIFIED DIMENSIONS ARE IN INCHES

DECIMAL TOLERANCES
.X ±.030
.XX ±.015
.XXX ±.005
ANGULAR TOLERANCE
± .5°

NA FINISH

BREAK SHARP EDGES
MAX. XX MIN. XX

OUTSTANDING ECN

Q.A. CATEGORY A-3		DATE
DRAWN BY	Ed Koropsak	3/11/98
CHECKED BY		
DESIGN APPROVAL		
ENGINEER APPROVAL	R. MICHNOFF	3/11/98
SUPVR. APPROVAL		

NEXT ASSEMBLY

BROOKHAVEN NATIONAL LABORATORY
ASSOCIATED UNIVERSITIES, INC.
UPTON, N.Y. 11973

RHIC CONTROLS WIRING DIAGRAM

ALCOVE 1009A CHASSIS CFE-9A-PS3

V102 DELAY MODULE

SIZE D

94028685

DRAWING NUMBER

REV. A

MATERIAL: ———— SCALE: NA WEIGHT: – SHEET 48 OF 52

*AUTOCAD

REV.	ZONE	ECN NO.	DATE	BY	CKR	APP.

Controls 8/12/99 2:26 PM 8685_51.dwg

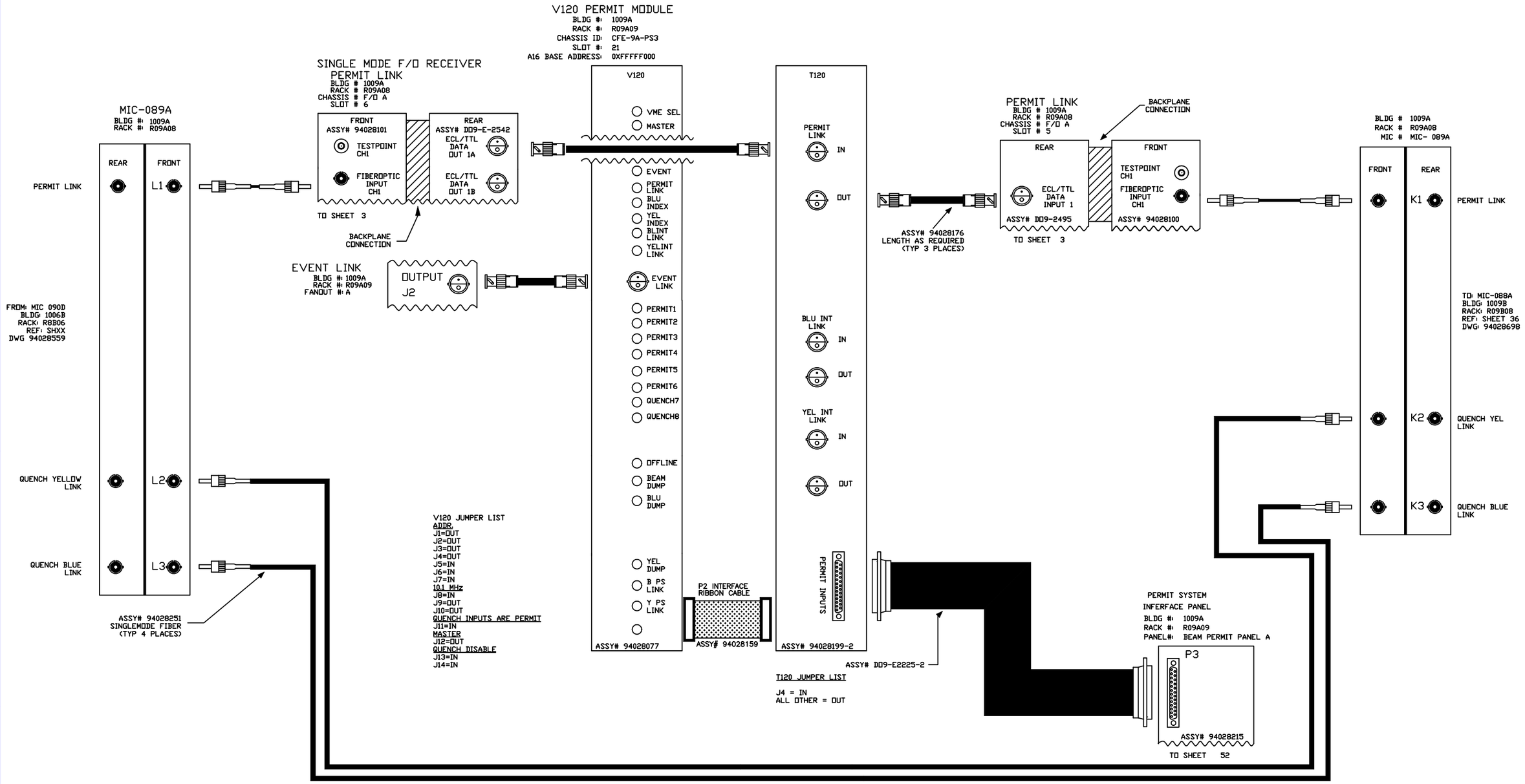

-3	-2	-1	REF DESIGNATOR	ITEM NO.	DESCRIPTION	MAT'L DWG NO./INL NO.
QTY REQD						

INTERPRET IN GENERAL ACCORDANCE WITH ASME Y14.24M-1989

UNLESS OTHERWISE SPECIFIED DIMENSIONS ARE IN INCHES

DECIMAL TOLERANCES
.X ±.030
.XX ±.015
.XXX ±.005
ANGULAR TOLERANCE
± .5°

NA FINISH

BREAK SHARP EDGES
MAX. XX MIN. XX

OUTSTANDING ECN

Q.A. CATEGORY A-3		DATE
DRAWN BY	Venegas	8/12/99
CHECKED BY		
DESIGN APPROVAL		
ENGINEER APPROVAL	R. MICHNOFF	11/4/97
SUPVR. APPROVAL		

NEXT ASSEMBLY

BROOKHAVEN NATIONAL LABORATORY
UPTON, N.Y. 11973

RHIC CONTROLS WIRING DIAGRAM
ALCOVE 1009A, CHASSIS CFE-9A-PS3
V120/T120 PERMIT SYSTEM

SIZE D — 94028685 — REV. A
DRAWING NUMBER

MATERIAL: ——— SCALE: NA WEIGHT: – SHEET 51 OF XX

*AUTOCAD

REV.	ZONE	ECN NO.	DATE	BY	CKR	APP.

CONTROLS- 6/2/03 2:48 PM 8685_52.dwg

PERMIT SYSTEM INTERFACE MODULE

BLDG #: 1009A
RACK #: R09A09
PANEL #: PERMIT I/F PANEL A

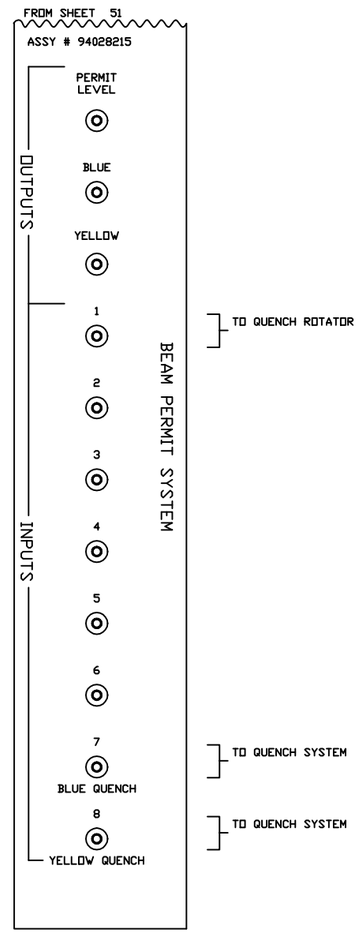

-3	-2	-1	REF DESIGNATOR	ITEM NO.	DESCRIPTION	MAT'L. DWG NO.,BNL NO.
QTY REQD						

INTERPRET IN GENERAL ACCORDANCE WITH ASME Y14.24M-1989

UNLESS OTHERWISE SPECIFIED DIMENSIONS ARE IN INCHES
DECIMAL TOLERANCES
.X ±.030
.XX ±.015
.XXX ±.005
ANGULAR TOLERANCE ± .5°

NA FINISH
BREAK SHARP EDGES
MAX. XX MIN. XX

OUTSTANDING ECN

Q.A. CATEGORY A-3		DATE
DRAWN BY	Ed Koropsak	3/11/98
CHECKED BY		
DESIGN APPROVAL		
ENGINEER APPROVAL	R. MICHNOFF	3/11/98
SUPVR. APPROVAL		
NEXT ASSEMBLY		

BROOKHAVEN NATIONAL LABORATORY
UPTON, N.Y. 11973

RHIC CONTROLS WIRING DIAGRAM
ALCOVE 1009A, RACK R09A09
PERMIT SYSTEM INTERFACE PANEL

SIZE D | DRAWING NUMBER 94028685 | REV. A

MATERIAL: ——— SCALE: NA WEIGHT: – SHEET 52

*AUTOCAD

REV.	ZONE	ECN NO.	DATE	BY	CKR	APP.

VMIVME 4122 ANALOG OUTPUT MODULE

BLDG #: 1009A
RACK #: R09A09
CHASSIS ID: CFE-9A-PS3
SLOT #: 20
A16 BASE ADDRESS: 0x0200
CONFIGURATION: -10 TO +10 VOLTS

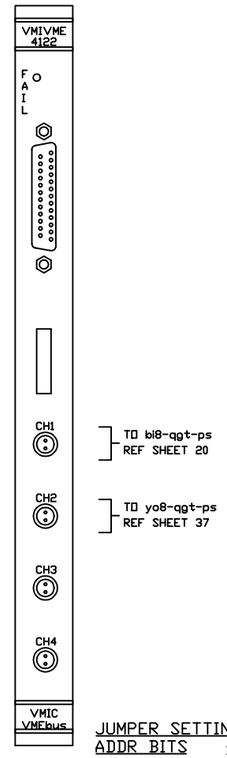

TO bi8-qgt-ps
REF SHEET 20

TO yo8-qgt-ps
REF SHEET 37

JUMPER SETTINGS

ADDR BITS	-10V TO +10V
E11 (A7):IN	E1:2-3
E12 (A8):IN	E3:2-3
E13 (A9):OUT	E4:OUT
E14 (A10):IN	E5:OUT
E15 (A11):IN	E6:2-3
E16 (A12):IN	E7:2-3
E17 (A13):IN	E8:1-2
E18 (A14):IN	E9:OUT
E19 (A15):IN	E10:OUT

NOTE: PIN 1 OF JUMPERS IS DESIGNATED BY A SQUARE PAD ON THE SOLDER SIDE OF THE BOARD

-3	-2	-1	REF DESIGNATOR	ITEM NO.	DESCRIPTION	MAT'L. DWG NO.,SPEC. NO.
QTY REQD						

INTERPRET IN GENERAL ACCORDANCE WITH ASME Y14.24M-1989

UNLESS OTHERWISE SPECIFIED DIMENSIONS ARE IN INCHES

DECIMAL TOLERANCES
.X ±.030
.XX ±.015
.XXX ±.005
ANGULAR TOLERANCE
± .5°

NA FINISH — BREAK SHARP EDGES MAX. XX MIN. XX

OUTSTANDING ECN

Q.A. CATEGORY A-3		DATE
DRAWN BY	Ed Koropsak	11/29/99
CHECKED BY		
DESIGN APPROVAL		
ENGINEER APPROVAL	R. MICHNOFF	11/29/99
SUPVR. APPROVAL		
NEXT ASSEMBLY		

BROOKHAVEN NATIONAL LABORATORY
UPTON, N.Y. 11973

C-A CONTROLS WIRING DIAGRAM
ALCOVE 1009A, RACK R09A09
GAMMA-T ANALOG SIGNAL

SIZE D — DRAWING NUMBER 94028685 — REV. A

MATERIAL: ——— SCALE: NA WEIGHT: – SHEET 53

*AUTOCAD

REV.	ZONE	ECN NO.	DATE	BY	CKR	APP.

CONTROLS- 6/17/03 2:31 PM 8685_54.dwg

MADC MUX A/D IO PANEL
BLDG #: 1009A
RACK #: R09A09
PANEL #: MADC A/D IO PANEL B
FR SHEET 17
J15
CHAN 31
SPARE

MADC MUX A/D IO PANEL
BLDG #: 1009A
RACK #: R09A10
PANEL #: MADC A/D IO PANEL A
FR SHEET 32
J15
CHAN 15
SPARE

MADC MUX A/D IO PANEL
BLDG #: 1009A
RACK #: R09A10
PANEL #: MADC A/D IO PANEL B
FR SHEET 34
J15
CHAN 31
SPARE

MADC MUX A/D IO PANEL
BLDG #: 1009A
RACK #: R09A09
PANEL #: MADC A/D IO PANEL G
FR SHEET 42
J15
CHAN 47
SPARE

-3	-2	-1	REF DESIGNATOR	ITEM NO.	DESCRIPTION	MAT'L. DWG NO.,SPEC. NO.
QTY REQD						

INTERPRET IN GENERAL ACCORDANCE WITH ASME Y14.24M-1989

UNLESS OTHERWISE SPECIFIED DIMENSIONS ARE IN INCHES

DECIMAL TOLERANCES
.X ±.030
.XX ±.015
.XXX ±.005
ANGULAR TOLERANCE
± .5°

NA FINISH

BREAK SHARP EDGES
MAX. XX MIN. XX

OUTSTANDING ECN

Q.A. CATEGORY A-3		DATE
DRAWN BY	Phil Pape	10/31/97
CHECKED BY		
DESIGN APPROVAL		
ENGINEER APPROVAL	R. MICHNOFF	10/31/97
SUPVR. APPROVAL		
NEXT ASSEMBLY		

BROOKHAVEN NATIONAL LABORATORY
UPTON, N.Y. 11973

RHIC CONTROLS WIRING DIAGRAM
ALCOVE 1009A
SPARE MADC INPUTS

SIZE D
94028685
DRAWING NUMBER
REV. A

MATERIAL: ——— SCALE: NA WEIGHT: – SHEET 54

*AUTOCAD