RHIC Accelerator Controls Section
Bldg. 1008B Wiring Diagrams
BNL Drawing Number 94028559

Brookhaven National Laboratory, Upton, New York 11973

Created By: Ed Koropsak
Last Updated by Venegas 7/9/03

Power Distribution

🕮 Rack R08B06 (Sheet 1)
🕮 Rack R08B05, Rack R08B04 (Sheet 2)
🕮 Rack R08B03 (Sheet 3)

SPARES

🕮 MADC Channels (Sheet 47)
🕮 MADC Rack Panel Layout (Sheet 47.1)
🕮 F/O Channels (Sheet 48)

Serial Links

🕮 Event Link (Sheet 4,5)
🕮 Real Time Data Link (RTDL) (Sheet 6,7)
🕮 Reset Link (Sheet 8,53)
🕮 Beam Sync Yellow Link (Sheet 9)
🕮 Beam Sync Blue Link (Sheet 10)

VME Chassis CFE-8B-PS1 modules

🕮 CPU, Memory Board, V108 Utility Module (Sheet 11)
🕮 V113/V114 MADC System (Sheet 12)
🕮 V115 WFG A: bo7-tq4, bo7-tq5 (Sheet 13)
🕮 V115 WFG B: bo7-tq6, bi8-tq4 (Sheet 14)
🕮 V115 WFG C: bi8-tq5, bi8-tq6 (Sheet 15)
🕮 V115 WFG D: b8-q89, bi8-qf9 (Sheet 16)
🕮 V115 WFG E: bo7-qf8, b8-dhx (Sheet 17)
🕮 V115 WFG F: b8-dh0 (Sheet 18)
🕮 RTDL Monitor Using WFG (Sheet 19)
🕮 V120 Permit Module (Sheet 51)
🕮 DX Heater PS MADC Readbacks (Sheet 50)
🕮 PHENIX PS MADC Readbacks (Sheet 50)
🕮 Permit System Interface Panel (Sheet 52)

NOTE: Sheets 20-27,36-48,54-59,66-68,73-76 are Blank

VME Chassis CFE-8B-PS2 modules

🕮 CPU, Memory Board, V108 Utility Module (Sheet 28)
🕮 V113/V114 MADC System (Sheet 29)
🕮 V115 WFG A: yi7-tq4, yi7-tq5 (Sheet 30)
🕮 V115 WFG B: yi7-tq6, yo8-tq4 (Sheet 31)
🕮 V115 WFG C: yo8-tq5, yo8-tq6 (Sheet 32)
🕮 V115 WFG D: y8-q89, yo8-qf8 (Sheet 33)
🕮 V115 WFG E: yi7-qf9, y8-dh0 (Sheet 34)
🕮 V115 WFG F:yo8-sxd9-ps,yo8-sxf10-ps (Sheet 35)
🕮 V102 Delay Module A - Event Link (Sheet 49)

VME Chassis CFE-8B-PS3 modules

🕮 CPU, Memory Board, V108 Utility Module and Temp Mon (Sheet 60)
🕮 V113/V114 MADC System A & B (Sheet 61)
🕮 V115 WFG A: bo7-qd1, bi8-qf1 (Sheet 62)
🕮 V115 WFG B: bo7-qf2, bo7-qd3 (Sheet 63)
🕮 V115 WFG C: bi8-qd2, bi8-qf3 (Sheet 64)
🕮 V115 WFG D: b8-q6, b8-q7 (Sheet 65)
🕮 V115 WFG H: yi7-qf1, yo8-qd1 (Sheet 69)
🕮 V115 WFG I: yi7-qd2, yi7-qf3 (Sheet 70)
🕮 V115 WFG J: yo8-qf2, yo8-qd3 (Sheet 71)
🕮 V115 WFG G: y8-q6, y8-q7 (Sheet 72)
🕮 Vacuum MADC I/O Panels G & H (Sheet 77)
🕮 208 Voltage Monitor MADC Ch (Sheet 78)

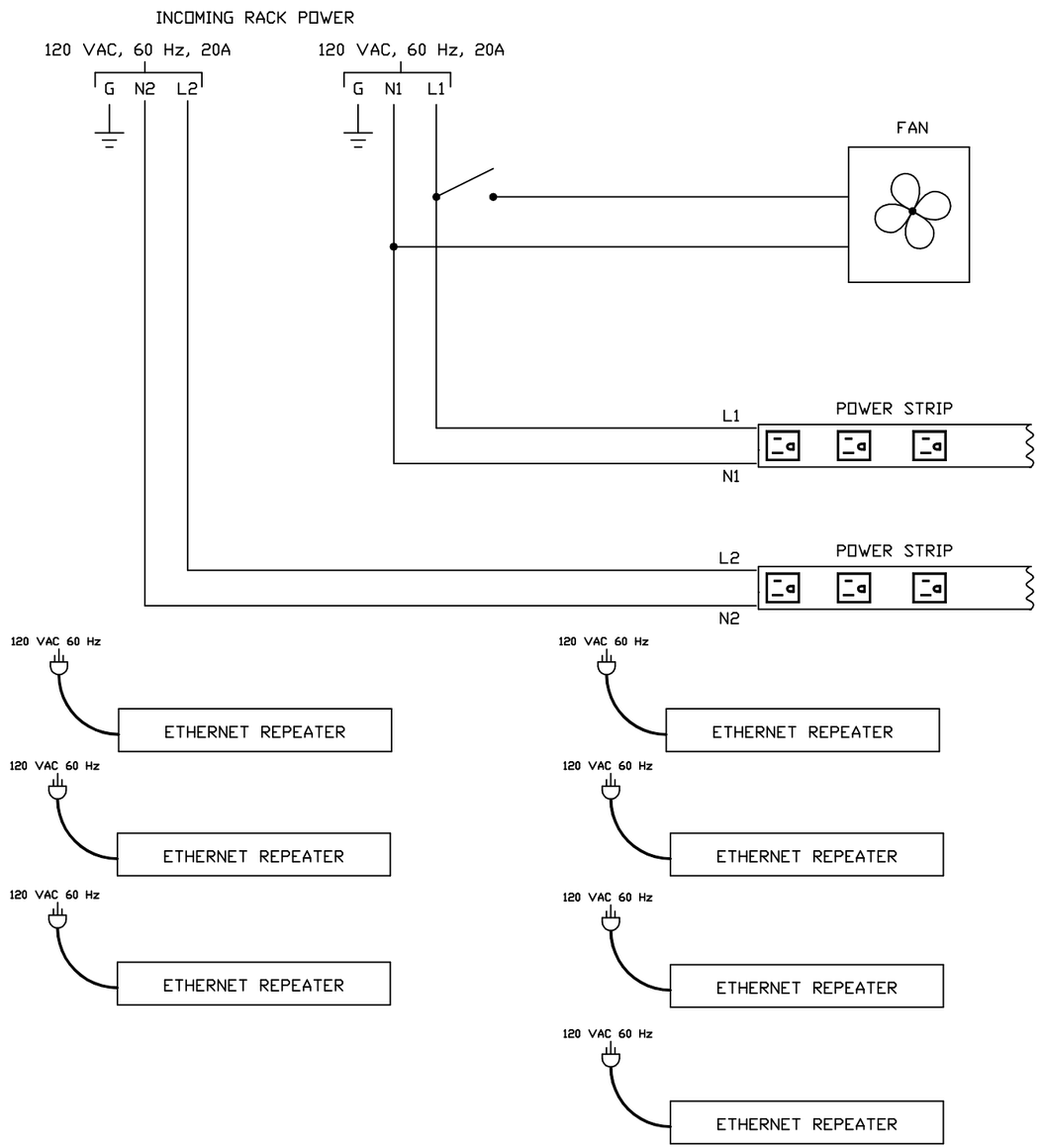

NOTE: ALL 120 VAC, 60 Hz POWER CORDS
PLUG INTO POWER STRIP OUTLETS

RACK R8B06

REV.	ZONE	ECN NO.	DATE	BY	CKR	APP.

-3	-7	-1	REF DESIGNATOR	ITEM NO.	DESCRIPTION	MAT'L DWG NO./INL NO.
		X		11	CABLE ASSY, POWER SUPPLY TO MADC A/D I/O PANEL (3 CABLES/PS)	
		X		10	CABLE ASSY, LOW RES PS IF MODULE TO POWER SUPPLY	
		X		9	PERMIT SYSTEM INTERFACE CABLE, T120 TO PERMIT SYSTEM INTERFACE PANEL	D09-E2225-2
		X		8	SERIAL LINK TWINAX CABLE, LENGTH AS REQUIRED	94028176
		X		7	SERIAL LINK TWINAX CABLE, 1 FT	94028176
		X		6	DUPLEX MULTIMODE FIBER OPTIC CABLE, T115 TO LOW RES PS INTERFACE MODULE	94028249
		X		5	SINGLE MODE FIBER OPTIC CABLE	94028251
		X		4	MADC A/D I/O CABLE	94028216
		X		3	TRANSITION MODULE P2 RIBBON CABLE, V115, V120	94028159
		X		2	MADC V113 TO V114 P2 INTERFACE RIBBON CABLE	94028218
		X		1	NETWORK CABLE TO FRONT END COMPUTER	

QTY REQD

INTERPRET IN GENERAL ACCORDANCE WITH ASME Y14.24M-1989

UNLESS OTHERWISE SPECIFIED DIMENSIONS ARE IN INCHES
DECIMAL TOLERANCES
.X ±.030
.XX ±.015
.XXX ±.005
ANGULAR TOLERANCE
± .5°

NA FINISH
BREAK SHARP EDGES
MAX. XX MIN. XX

OUTSTANDING ECN

Q.A. CATEGORY A-3

		DATE
DRAWN BY	Ed Koropsak	6/5/98
CHECKED BY		
DESIGN APPROVAL		
ENGINEER APPROVAL	R. MICHNOFF	6/5/98
SUPVR. APPROVAL		

NEXT ASSEMBLY

BROOKHAVEN NATIONAL LABORATORY
UPTON, N.Y. 11973

RHIC CONTROLS WIRING DIAGRAM
SERVICE BLDG. RACK R8B06
POWER DISTRIBUTION

SIZE D
DRAWING NUMBER 94028559
REV. A

MATERIAL: ——— SCALE: NA WEIGHT: – SHEET 1 OF 52

*AUTOCAD

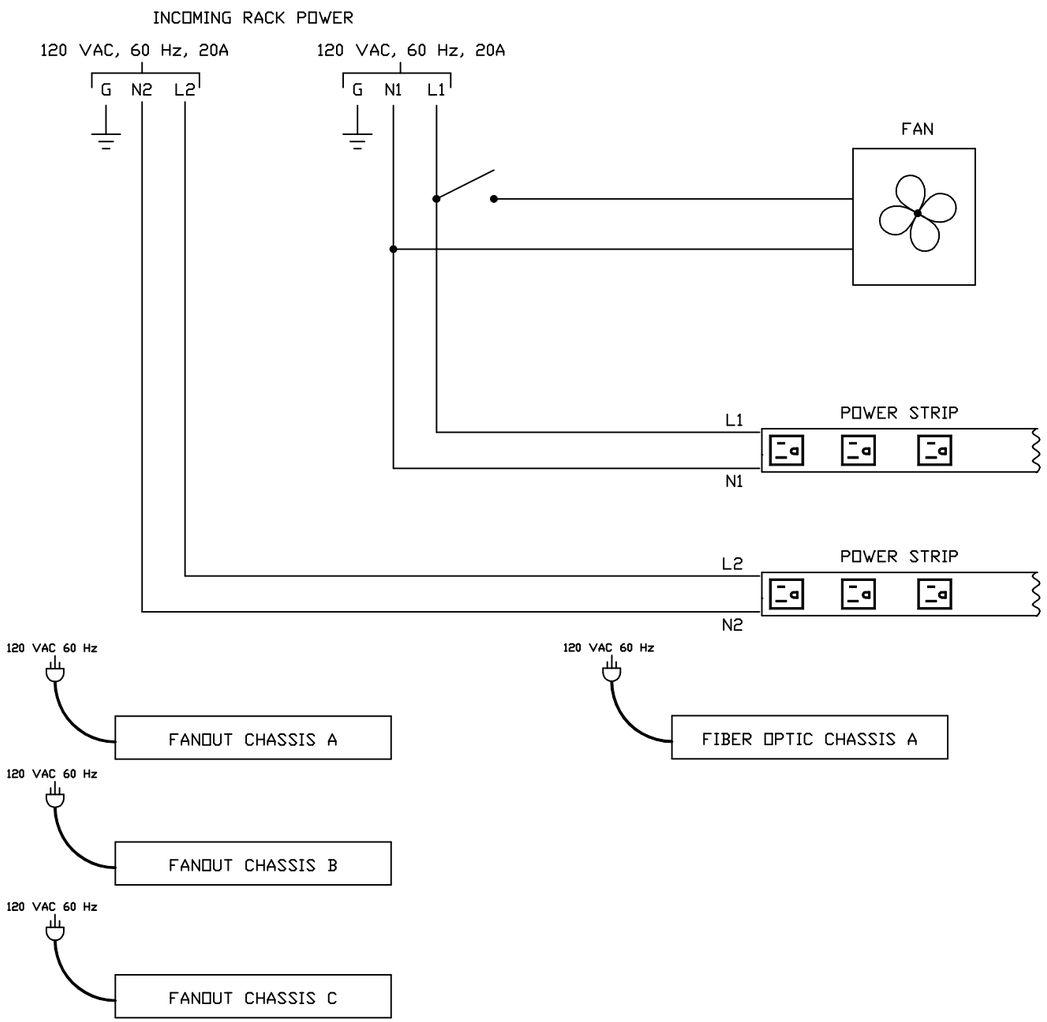

RACK R08B05

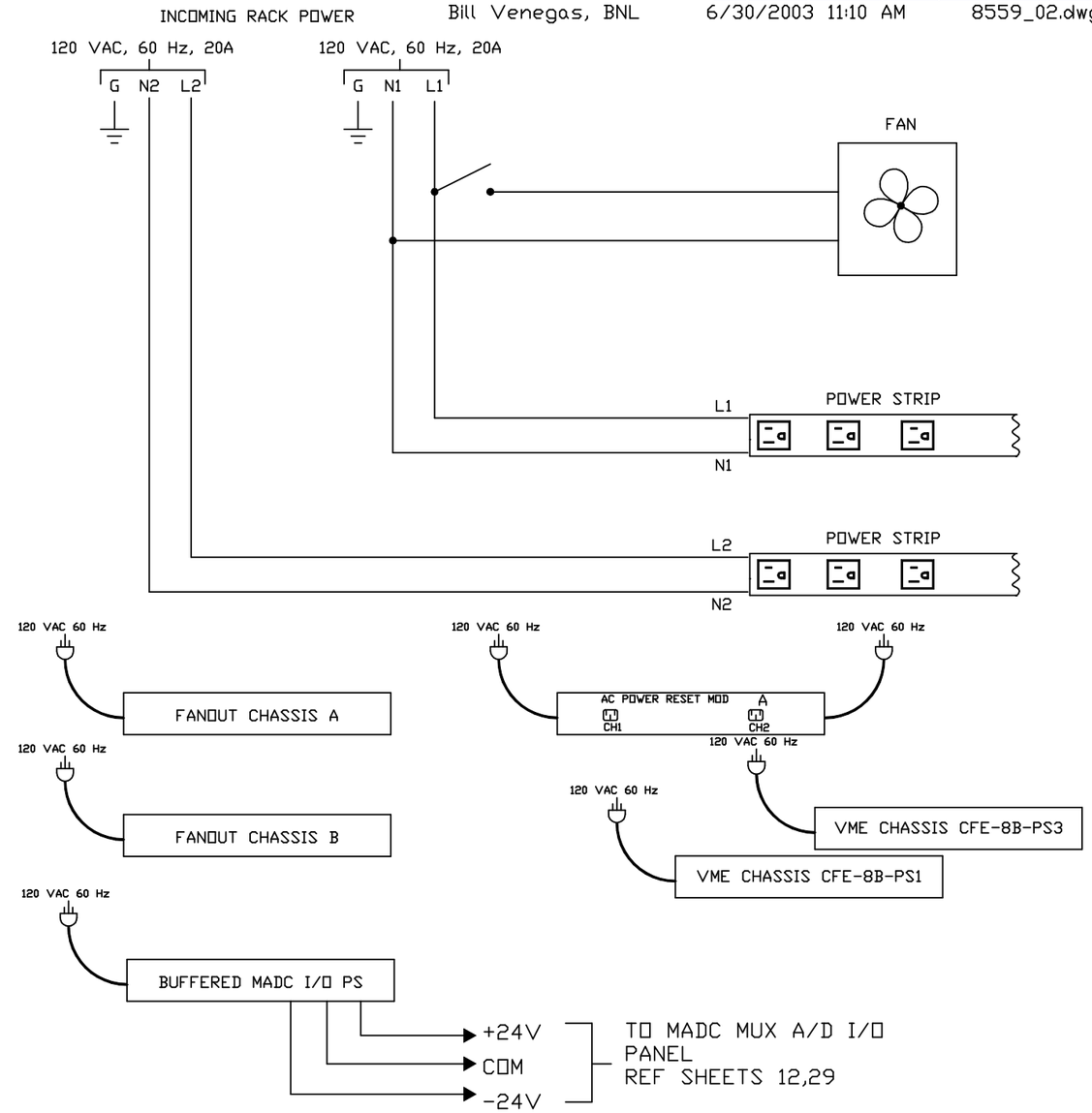

RACK R08B04

Bill Venegas, BNL 6/30/2003 11:10 AM 8559_02.dwg

REV.	ZONE	ECN NO.	DATE	BY	CKR	APP.

-3	-2	-1	REF DESIGNATOR	ITEM NO.	DESCRIPTION	MAT'L. DWG NO./BNL NO.
QTY REQD						

INTERPRET IN GENERAL ACCORDANCE WITH ASME Y14.24M-1989

UNLESS OTHERWISE SPECIFIED DIMENSIONS ARE IN INCHES

DECIMAL TOLERANCES
.X ±.030
.XX ±.015
.XXX ±.005
ANGULAR TOLERANCE
± .5°

OUTSTANDING ECN

NA FINISH

BREAK SHARP EDGES
MAX. XX MIN. XX

Q.A. CATEGORY A-3 DATE

DRAWN BY Venegas 6/30/03

CHECKED BY

DESIGN APPROVAL

ENGINEER APPROVAL

SUPVR. APPROVAL

NEXT ASSEMBLY

BROOKHAVEN NATIONAL LABORATORY
UPTON, N.Y. 11973

RHIC CONTROLS WIRING DIAGRAM

SERVICE BLDG. 1008B RACK R08B05, R08B04

POWER DISTRIBUTION

SIZE D

DRAWING NUMBER 94028559

REV. A

MATERIAL: ——— SCALE: NA WEIGHT: – SHEET 2

*AUTOCAD

REV.	ZONE	ECN NO.	DATE	BY	CKR	APP.

Controls 8/30/99 9:25 AM 8559_03.dwg

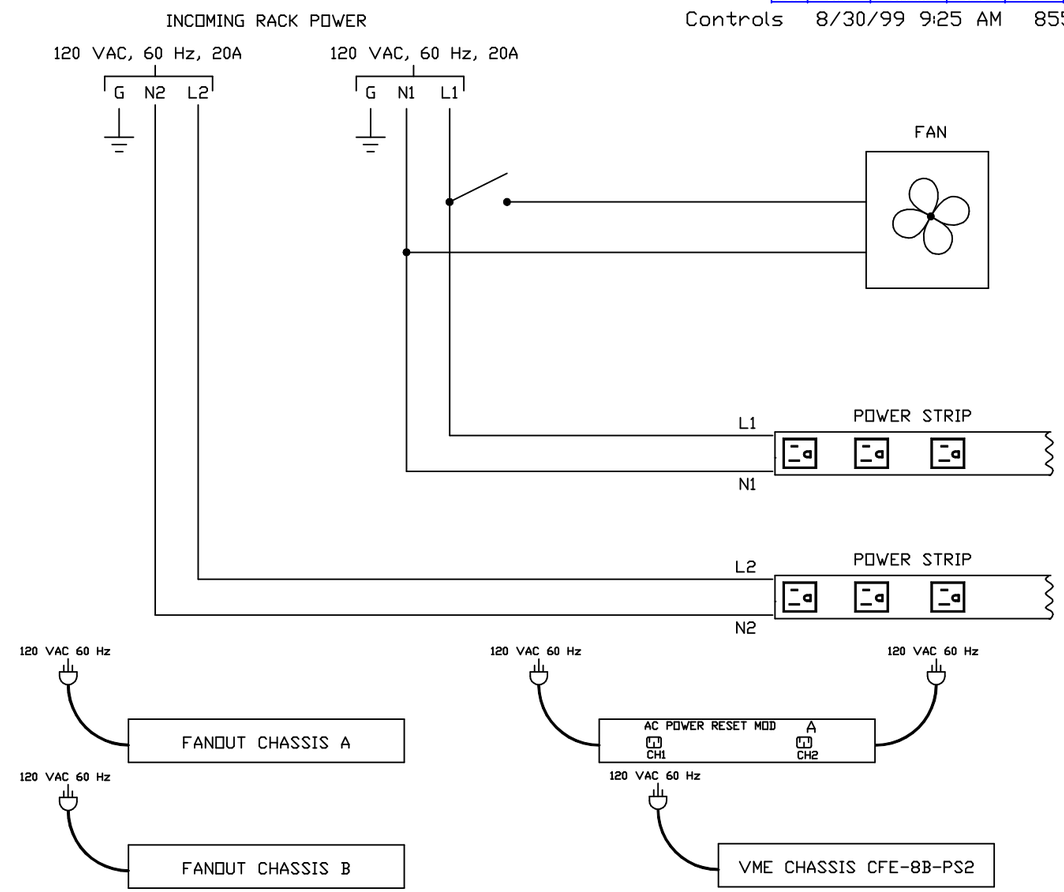

NOTE: ALL 120 VAC, 60 Hz POWER CORDS
PLUG INTO POWER STRIP OUTLETS EXCEPT FOR 6U VME CHASSIS

RACK R08B03

-3	-2	-1	REF DESIGNATOR	ITEM NO.	DESCRIPTION	MAT'L. DWG NO./BNL NO.
QTY REQD						

INTERPRET IN GENERAL ACCORDANCE WITH ASME Y14.24M-1989

UNLESS OTHERWISE SPECIFIED DIMENSIONS ARE IN INCHES

DECIMAL TOLERANCES
.X ±.030
.XX ±.015
.XXX ±.005
ANGULAR TOLERANCE
± .5°

NA FINISH — BREAK SHARP EDGES — MAX. XX MIN. XX

OUTSTANDING ECN

Q.A. CATEGORY A-3		DATE
DRAWN BY	Ed Koropsak	6/5/98
CHECKED BY		
DESIGN APPROVAL		
ENGINEER APPROVAL	R. MICHNOFF	6/5/98
SUPVR. APPROVAL		

NEXT ASSEMBLY

BROOKHAVEN NATIONAL LABORATORY
UPTON, N.Y. 11973

RHIC CONTROLS WIRING DIAGRAM
SERVICE BLDG. 1008B RACK R08B03
POWER DISTRIBUTION

SIZE D — DRAWING NUMBER 94028559 — REV. A

MATERIAL: ——— SCALE: NA WEIGHT: – SHEET 3 OF 52

*AUTOCAD

REV.	ZONE	ECN NO.	DATE	BY	CKR	APP.

Controls 8/30/99 9:40 AM 8559_04.dwg

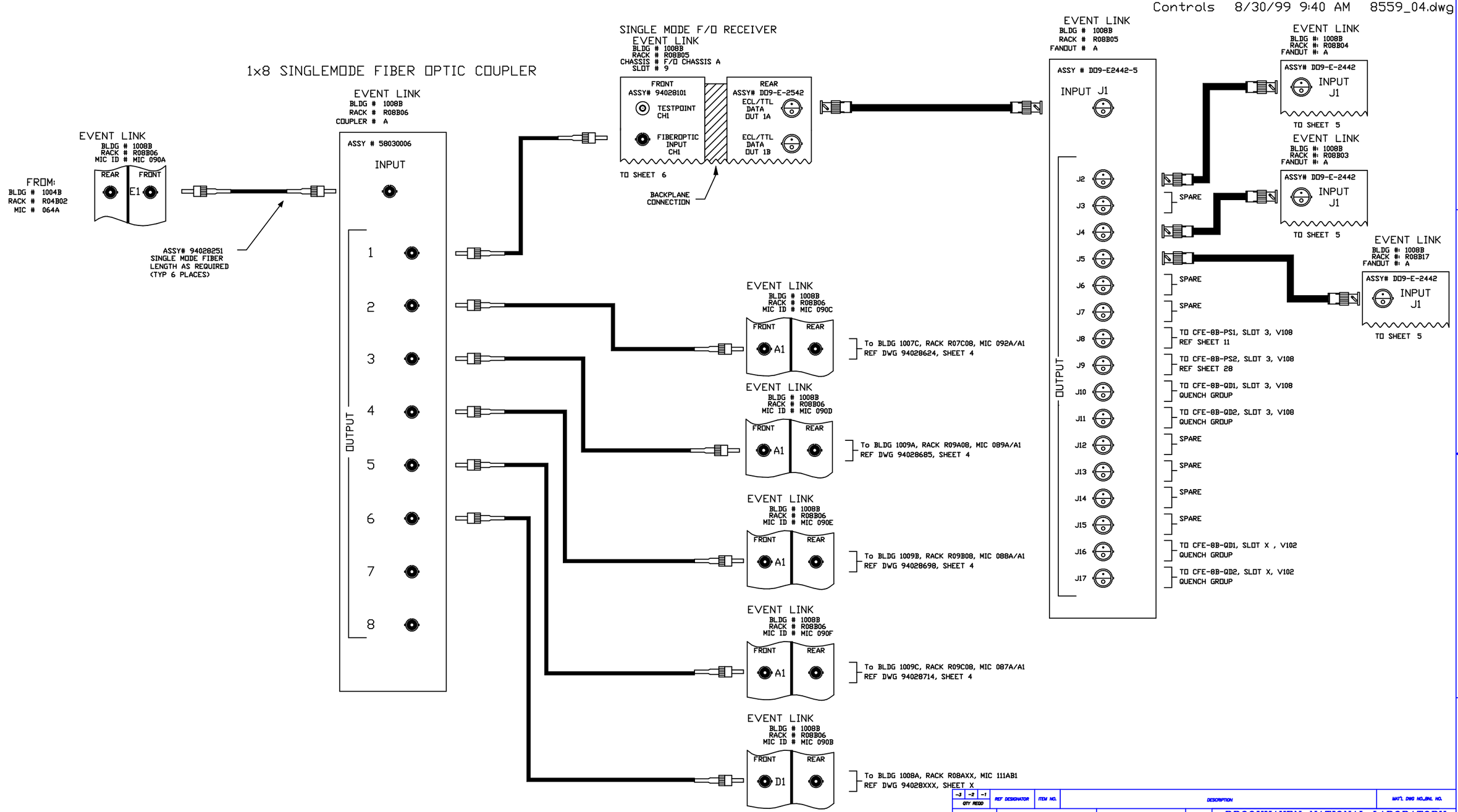

-3	-2	-1	REF DESIGNATOR	ITEM NO.	DESCRIPTION	MAT'L. DWG NO./INL NO.
QTY REQD						

INTERPRET IN GENERAL ACCORDANCE WITH ASME Y14.24M-1989

UNLESS OTHERWISE SPECIFIED DIMENSIONS ARE IN INCHES

DECIMAL TOLERANCES
.X ±.030
.XX ±.015
.XXX ±.005
ANGULAR TOLERANCE
± .5°

OUTSTANDING ECN

NA FINISH

BREAK SHARP EDGES
MAX. XX MIN. XX

Q.A. CATEGORY A-3		DATE
DRAWN BY	Ed Koropsak	6/5/98
CHECKED BY		
DESIGN APPROVAL		
ENGINEER APPROVAL	R. MICHNOFF	6/5/98
SUPVR. APPROVAL		

NEXT ASSEMBLY

BROOKHAVEN NATIONAL LABORATORY
UPTON, N.Y. 11973

RHIC CONTROLS WIRING DIAGRAM
SERVICE BLDG 1008B
EVENT LINK

SIZE D
DRAWING NUMBER 94028559
REV. A

MATERIAL: ——— SCALE: NA WEIGHT: – SHEET 4 OF 52

*AUTOCAD

REV.	ZONE	ECN NO.	DATE	BY	CKR	APP.

Bill Venegas, BNL 7/8/2003 1:46 PM 8559_05.dwg

EVENT LINK FANOUT MODULE

BLDG # 1008B
RACK # R08B04
FANOUT # A

FROM SHEET 4
ASSY # DD9-E2442-5

OUTPUT

J2	TO CFE-8B-PS1, SLOT 21, V120 REF SHEET 51
J3	To CFE-8B-PS1, SLOT 4, V113 REF SHEET 12
J4	SPARE REF SHEET
J5	SPARE
J6	SPARE REF SHEET
J7	SPARE REF SHEET
J8	SPARE REF SHEET
J9	To CFE-8B-PS1, SLOT 14, T215-2 REF SHEET 19
J10	To CFE-8B-PS1, SLOT 13, T215-1 REF SHEET 18
J11	To CFE-8B-PS1, SLOT 12, T215-2 REF SHEET 17
J12	To CFE-8B-PS1, SLOT 11, T215-2 REF SHEET 16
J13	To CFE-8B-PS1, SLOT 10, T215-2 REF SHEET 15
J14	To CFE-8B-PS1, SLOT 9, T215-2 REF SHEET 14
J15	To CFE-8B-PS1, SLOT 8, T215-2 REF SHEET 13
J16	SPARE
J17	SPARE

EVENT LINK FANOUT MODULE

BLDG # 1008B
RACK # R08B04
FANOUT # C

FROM SHEET 4
ASSY # DD9-E2442-5

OUTPUT

J2	SPARE REF SHEET XX
J3	To CFE-8B-PS3, SLOT 13, V113 REF SHEET 61
J4	TO CFE-8B-PS3, SLOT 18, T215-1 REF SHEET 72
J5	TO CFE-8B-PS3, SLOT 17, T215-1 REF SHEET 71
J6	TO CFE-8B-PS3, SLOT 16, T215-1 REF SHEET 70
J7	TO CFE-8B-PS3, SLOT 15, T215-2 REF SHEET 69
J8	SPARE REF SHEET
J9	SPARE REF SHEET
J10	SPARE REF SHEET
J11	SPARE REF SHEET
J12	SPARE REF SHEET
J13	To CFE-8B-PS3, SLOT 9, T215-1 REF SHEET 65
J14	To CFE-8B-PS3, SLOT 8, T215-1 REF SHEET 64
J15	To CFE-8B-PS3, SLOT 7, T215-1 REF SHEET 63
J16	TO CFE-8B-PS3, SLOT 6, T215-2 REF SHEET 62
J17	TO CFE-8B-PS3, SLOT 4, V113 REF SHEET 61

EVENT LINK FANOUT MODULE

BLDG # 1008B
RACK # R08B03
FANOUT # A

FROM SHEET 4
ASSY # DD9-E2442-5

OUTPUT

J2	To CFE-8B-PS2, SLOT 20, V102 REF SHEET 49
J3	To CFE-8B-PS2, SLOT 4, V113 REF SHEET 29
J4	SPARE
J5	SPARE
J6	SPARE REF SHEET
J7	SPARE REF SHEET
J8	SPARE REF SHEET
J9	SPARE REF SHEET
J10	To CFE-8B-PS2, SLOT 13, T215-1 REF SHEET 35
J11	To CFE-8B-PS2, SLOT 12, T215-2 REF SHEET 34
J12	To CFE-8B-PS2, SLOT 11, T215-2 REF SHEET 33
J13	To CFE-8B-PS2, SLOT 10, T215-2 REF SHEET 32
J14	To CFE-8B-PS2, SLOT 9, T215-2 REF SHEET 31
J15	To CFE-8B-PS2, SLOT 8, T215-2 REF SHEET 30
J16	SPARE
J17	SPARE

EVENT LINK FANOUT MODULE

BLDG # 1008B
RACK # R08B17
FANOUT # A

FROM SHEET 4
ASSY # DD9-E2442-5

OUTPUT

J2	To CFE-8B-BLM1, SLOT 3, V108
J3	To CFE-8B-BLM1, SLOT 6, V113
J4	To CFE-8B-BLM1, SLOT 13, V118
J5	To CFE-8B-BLM2, SLOT 3, V108
J6	To CFE-8B-BLM2, SLOT 6, V113
J7	To CFE-8B-BLM2, SLOT 13, V118
J8	To CFE-8B-BPM1, SLOT 3, V108
J9	To CFE-8B-SCRAPER, SLOT 3, V108
J10	SPARE
J11	SPARE
J12	SPARE
J13	SPARE
J14	SPARE
J15	SPARE
J16	SPARE
J17	SPARE

-3	-2	-1	REF DESIGNATOR	ITEM NO.	DESCRIPTION	MAT'L. DWG NO./BNL NO.
QTY REQD						

INTERPRET IN GENERAL ACCORDANCE WITH ASME Y14.24M-1989

UNLESS OTHERWISE SPECIFIED DIMENSIONS ARE IN INCHES

DECIMAL TOLERANCES
.X ±.030
.XX ±.015
.XXX ±.005
ANGULAR TOLERANCE ± .5°

OUTSTANDING ECN

NA FINISH

BREAK SHARP EDGES MAX. XX MIN. XX

Q.A. CATEGORY A-3		DATE
DRAWN BY	Venegas	6/30/03
CHECKED BY		
DESIGN APPROVAL		
ENGINEER APPROVAL		
SUPVR. APPROVAL		
NEXT ASSEMBLY		

BROOKHAVEN NATIONAL LABORATORY
UPTON, N.Y. 11973

RHIC CONTROLS WIRING DIAGRAM
1008B
EVENT LINK

SIZE D | DRAWING NUMBER 94028559 | REV. A

MATERIAL: ——— SCALE: NA WEIGHT: – SHEET 5

*AUTOCAD

REV.	ZONE	ECN NO.	DATE	BY	CKR	APP.

Controls 8/30/99 10:24 AM 8559_06.dwg

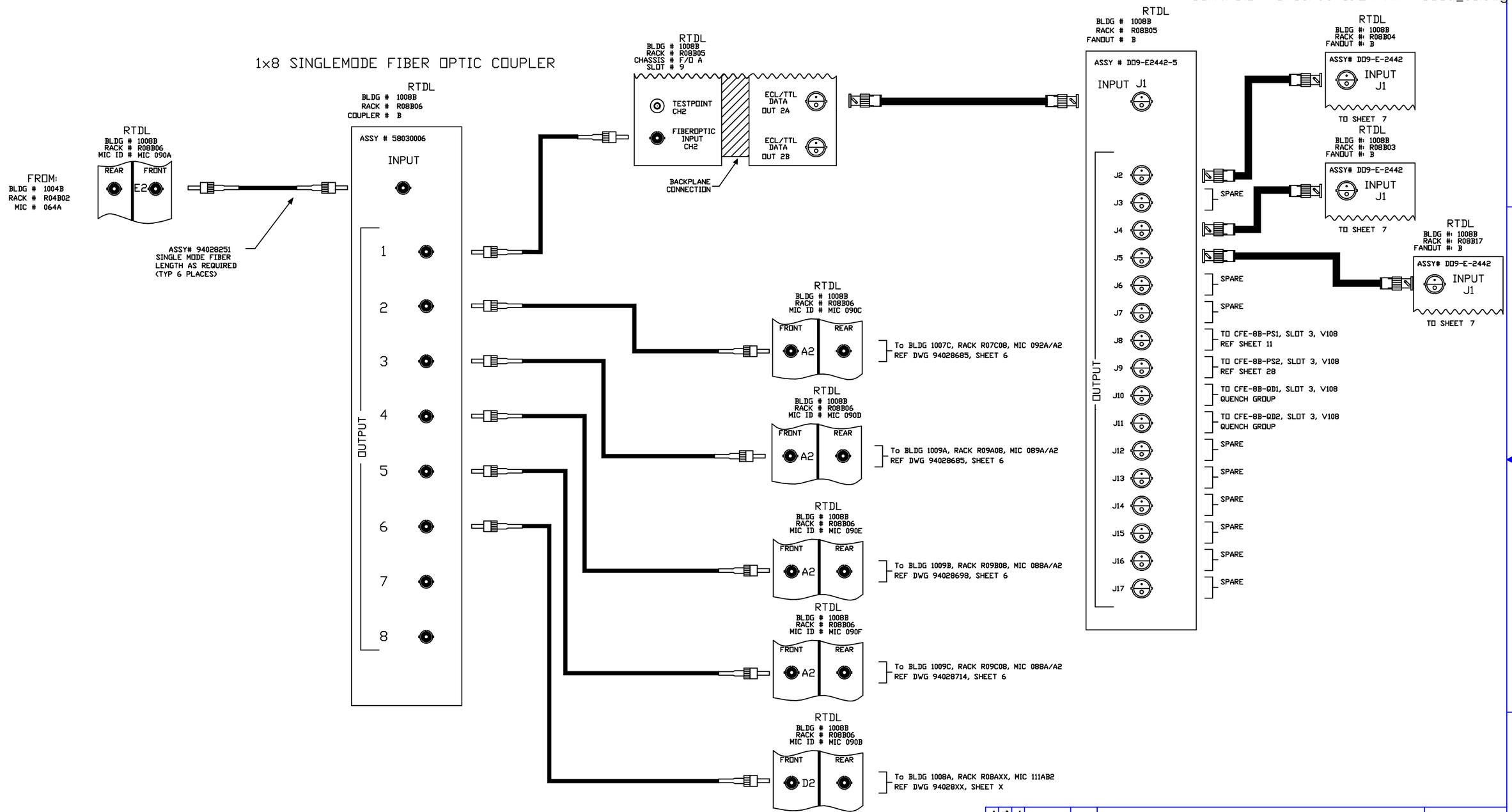

-3	-2	-1	REF DESIGNATOR	ITEM NO.	DESCRIPTION	MAT'L. DWG NO./INL NO.
QTY REQD						

INTERPRET IN GENERAL ACCORDANCE WITH ASME Y14.24M-1989

UNLESS OTHERWISE SPECIFIED DIMENSIONS ARE IN INCHES

DECIMAL TOLERANCES
.X ±.030
.XX ±.015
.XXX ±.005
ANGULAR TOLERANCE
± .5°

FINISH: NA

BREAK SHARP EDGES MAX. XX MIN. XX

OUTSTANDING ECN

Q.A. CATEGORY A-3		DATE
DRAWN BY	Ed Koropsak	6/5/98
CHECKED BY		
DESIGN APPROVAL		
ENGINEER APPROVAL	R. MICHNOFF	6/5/98
SUPVR. APPROVAL		

NEXT ASSEMBLY

BROOKHAVEN NATIONAL LABORATORY
UPTON, N.Y. 11973

RHIC CONTROLS WIRING DIAGRAM
SERVICE BLDG 1008B
RTDL

SIZE D | DRAWING NUMBER 94028559 | REV. A

MATERIAL: ——— SCALE: NA WEIGHT: – SHEET 6

*AUTOCAD

Bill Venegas, BNL 6/30/2003 1:52 PM 8559_07.dwg

REV.	ZONE	ECN NO.	DATE	BY	CKR	APP.

RTDL FANOUT MODULE

BLDG # 1008B
RACK # R08B04
FANOUT # B

FROM SHEET 6
ASSY # DD9-E2442-5

OUTPUT

J2	SPARE
J3	SPARE
J4	SPARE
J5	SPARE
J6	SPARE REF SHEET
J7	SPARE REF SHEET
J8	SPARE REF SHEET
J9	To CFE-8B-PS1, SLOT 14, T215-2 REF SHEET 19
J10	To CFE-8B-PS1, SLOT 13, T215-1 REF SHEET 18
J11	To CFE-8B-PS1, SLOT 12, T215-2 REF SHEET 17
J12	To CFE-8B-PS1, SLOT 11, T215-2 REF SHEET 16
J13	To CFE-8B-PS1, SLOT 10, T215-2 REF SHEET 15
J14	To CFE-8B-PS1, SLOT 9, T215-2 REF SHEET 14
J15	To CFE-8B-PS1, SLOT 8, T215-2 REF SHEET 13
J16	SPARE
J17	SPARE

RTDL FANOUT MODULE

BLDG # 1008B
RACK # R08B04
FANOUT # D

FROM SHEET 6
ASSY # DD9-E2442-5

OUTPUT

J2	SPARE
J3	SPARE REF SHEET
J4	TO CFE-8B-PS3, SLOT 18, T215-1 REF SHEET 72
J5	TO CFE-8B-PS3, SLOT 17, T215-1 REF SHEET 71
J6	TO CFE-8B-PS3, SLOT 16, T215-1 REF SHEET 70
J7	TO CFE-8B-PS1, SLOT 15, T215-2 REF SHEET 69
J8	SPARE REF SHEET
J9	SPARE REF SHEET
J10	SPARE REF SHEET
J11	SPARE REF SHEET
J12	SPARE REF SHEET
J13	To CFE-8B-PS3, SLOT 9, T215-1 REF SHEET 65
J14	To CFE-8B-PS3, SLOT 8, T215-1 REF SHEET 64
J15	To CFE-8B-PS3, SLOT 7, T215-1 REF SHEET 63
J16	To CFE-8B-PS3, SLOT 6, T215-2 REF SHEET 62
J17	SPARE

RTDL FANOUT MODULE

BLDG # 1008B
RACK # R08B03
FANOUT # B

FROM SHEET 6
ASSY # DD9-E2442-5

OUTPUT

J2	SPARE
J3	SPARE
J4	SPARE
J5	SPARE
J6	SPARE REF SHEET
J7	SPARE REF SHEET
J8	SPARE REF SHEET
J9	SPARE REF SHEET
J10	To CFE-8B-PS2, SLOT 13, T215-1 REF SHEET 35
J11	To CFE-8B-PS2, SLOT 12, T215-2 REF SHEET 34
J12	To CFE-8B-PS2, SLOT 11, T215-2 REF SHEET 33
J13	To CFE-8B-PS2, SLOT 10, T215-2 REF SHEET 32
J14	To CFE-8B-PS2, SLOT 9, T215-2 REF SHEET 31
J15	To CFE-8B-PS2, SLOT 8, T215-2 REF SHEET 30
J16	SPARE
J17	SPARE

RTDL FANOUT MODULE

BLDG # 1008B
RACK # R08B17
FANOUT # B

FROM SHEET 6
ASSY # DD9-E2442-5

OUTPUT

J2	TO CFE-8B-BLM1, SLOT 3, V108
J3	TO CFE-8B-BLM2, SLOT 3, V108
J4	TO CFE-8B-BPM1, SLOT 3, V108
J5	TO CFE-8B-SCRAPER, SLOT 3, V108
J6	SPARE
J7	SPARE
J8	SPARE
J9	SPARE
J10	SPARE
J11	SPARE
J12	SPARE
J13	SPARE
J14	SPARE
J15	SPARE
J16	SPARE
J17	SPARE

-3	-2	-1	REF DESIGNATOR	ITEM NO.	DESCRIPTION	MAT'L. DWG NO./BNL NO.
QTY REQD						

INTERPRET IN GENERAL ACCORDANCE WITH ASME Y14.24M-1989

UNLESS OTHERWISE SPECIFIED DIMENSIONS ARE IN INCHES

DECIMAL TOLERANCES
.X ±.030
.XX ±.015
.XXX ±.005
ANGULAR TOLERANCE ± .5°

OUTSTANDING ECN

NA FINISH

BREAK SHARP EDGES MAX. XX MIN. XX

Q.A. CATEGORY A-3		DATE
DRAWN BY	Venegas	6/30/03
CHECKED BY		
DESIGN APPROVAL		
ENGINEER APPROVAL		
SUPVR. APPROVAL		

NEXT ASSEMBLY

BROOKHAVEN NATIONAL LABORATORY
UPTON, N.Y. 11973

RHIC CONTROLS WIRING DIAGRAM
1008B
REAL TIME DATA LINK

SIZE D | DRAWING NUMBER 94028559 | REV. A

MATERIAL: ——— SCALE: NA WEIGHT: – SHEET 7

*AUTOCAD

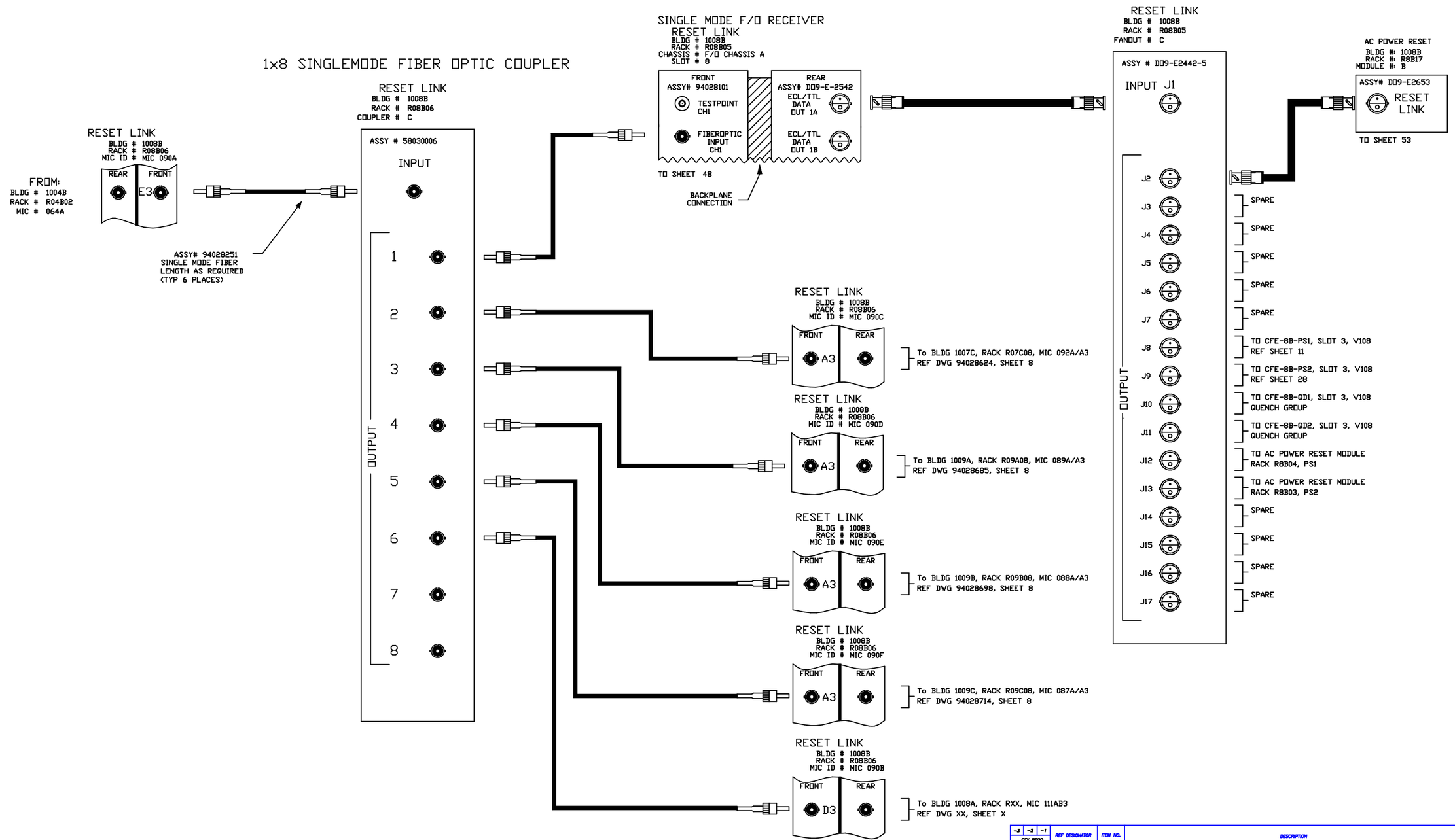

REV.	ZONE	ECN NO.	DATE	BY	CKR	APP.

Controls 8/30/99 10:42 AM 8559_08.dwg

-3	-2	-1	REF DESIGNATOR	ITEM NO.	DESCRIPTION	MAT'L. DWG NO./BNL NO.
QTY REQD						

INTERPRET IN GENERAL ACCORDANCE WITH ASME Y14.24M-1989

UNLESS OTHERWISE SPECIFIED DIMENSIONS ARE IN INCHES

DECIMAL TOLERANCES
.X ±.030
.XX ±.015
.XXX ±.005
ANGULAR TOLERANCE
± .5°

FINISH: NA

BREAK SHARP EDGES MAX. XX MIN. XX

OUTSTANDING ECN

Q.A. CATEGORY A-3		DATE
DRAWN BY	Ed Koropsak	6/5/98
CHECKED BY		
DESIGN APPROVAL		
ENGINEER APPROVAL	R. MICHNOFF	6/5/98
SUPVR. APPROVAL		

NEXT ASSEMBLY

BROOKHAVEN NATIONAL LABORATORY
ASSOCIATED UNIVERSITIES, INC.
UPTON, N.Y. 11973

RHIC CONTROLS WIRING DIAGRAM
SERVICE BLDG 1008B
RESET LINK

SIZE D | DRAWING NUMBER 94028559 | REV. A

MATERIAL: ——— SCALE: NA WEIGHT: – SHEET 8

*AUTOCAD

REV.	ZONE	ECN NO.	DATE	BY	CKR	APP.

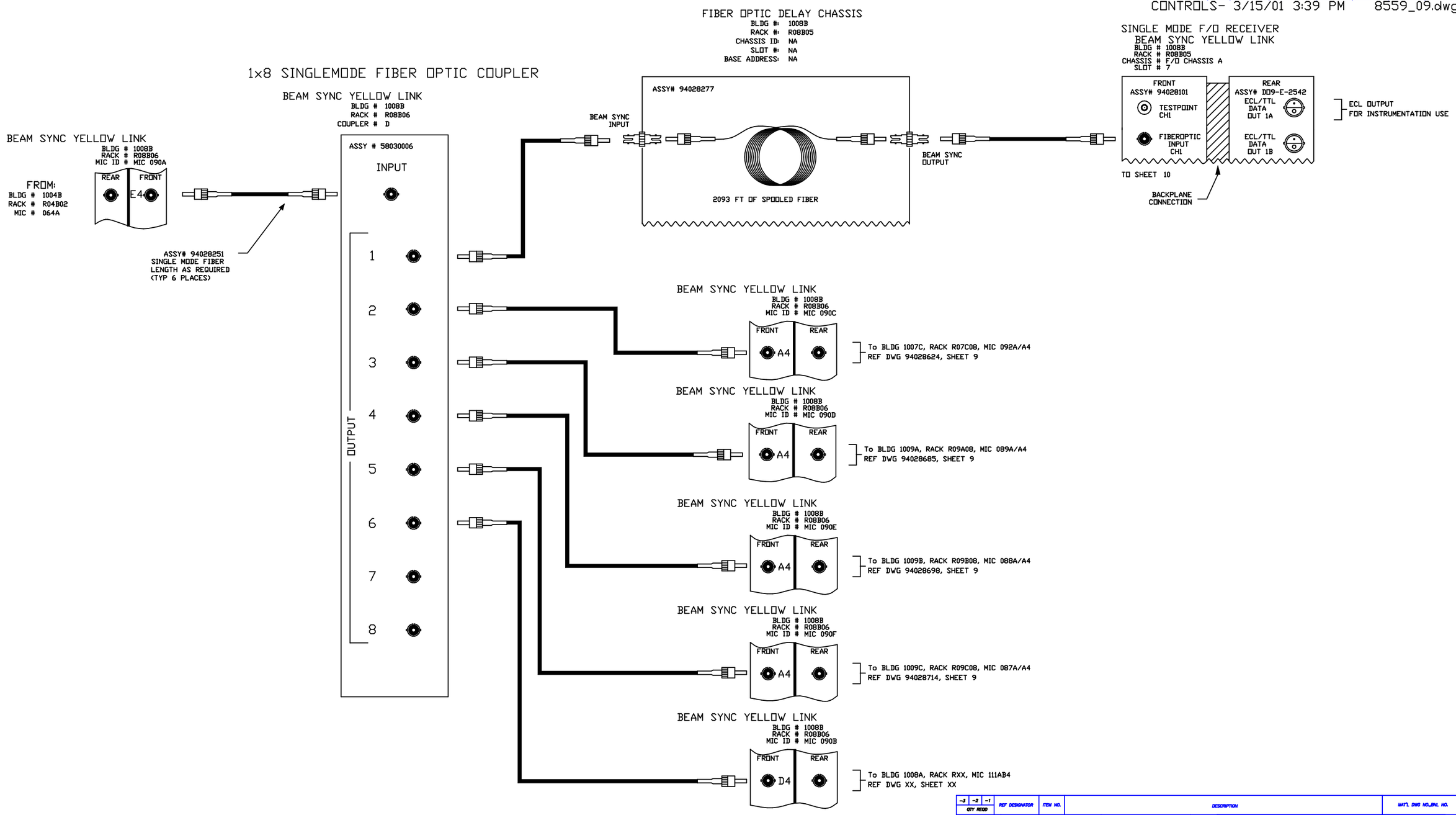

-3	-2	-1	REF DESIGNATOR	ITEM NO.	DESCRIPTION	MAT'L. DWG NO.,SPEC. NO.
QTY REQD						

INTERPRET IN GENERAL ACCORDANCE WITH ASME Y14.24M-1989

UNLESS OTHERWISE SPECIFIED DIMENSIONS ARE IN INCHES

DECIMAL TOLERANCES
.X ±.030
.XX ±.015
.XXX ±.005
ANGULAR TOLERANCE ± .5°

OUTSTANDING ECN

NA FINISH

BREAK SHARP EDGES MAX. XX MIN. XX

Q.A. CATEGORY	A-3	DATE	
DRAWN BY	Ed Koropsak	6/5/98	
CHECKED BY			
DESIGN APPROVAL			
ENGINEER APPROVAL	R. MICHNOFF	6/5/98	
SUPVR. APPROVAL			

NEXT ASSEMBLY

BROOKHAVEN NATIONAL LABORATORY
UPTON, N.Y. 11973

RHIC CONTROLS WIRING DIAGRAM

SERVICE BLDG 1008B

BEAM SYNC YELLOW LINK

SIZE D | DRAWING NUMBER 94028559 | REV. A

MATERIAL: ——— | SCALE: NA | WEIGHT: – | SHEET 9 OF 52

*AUTOCAD

REV.	ZONE	ECN NO.	DATE	BY	CKR	APP.

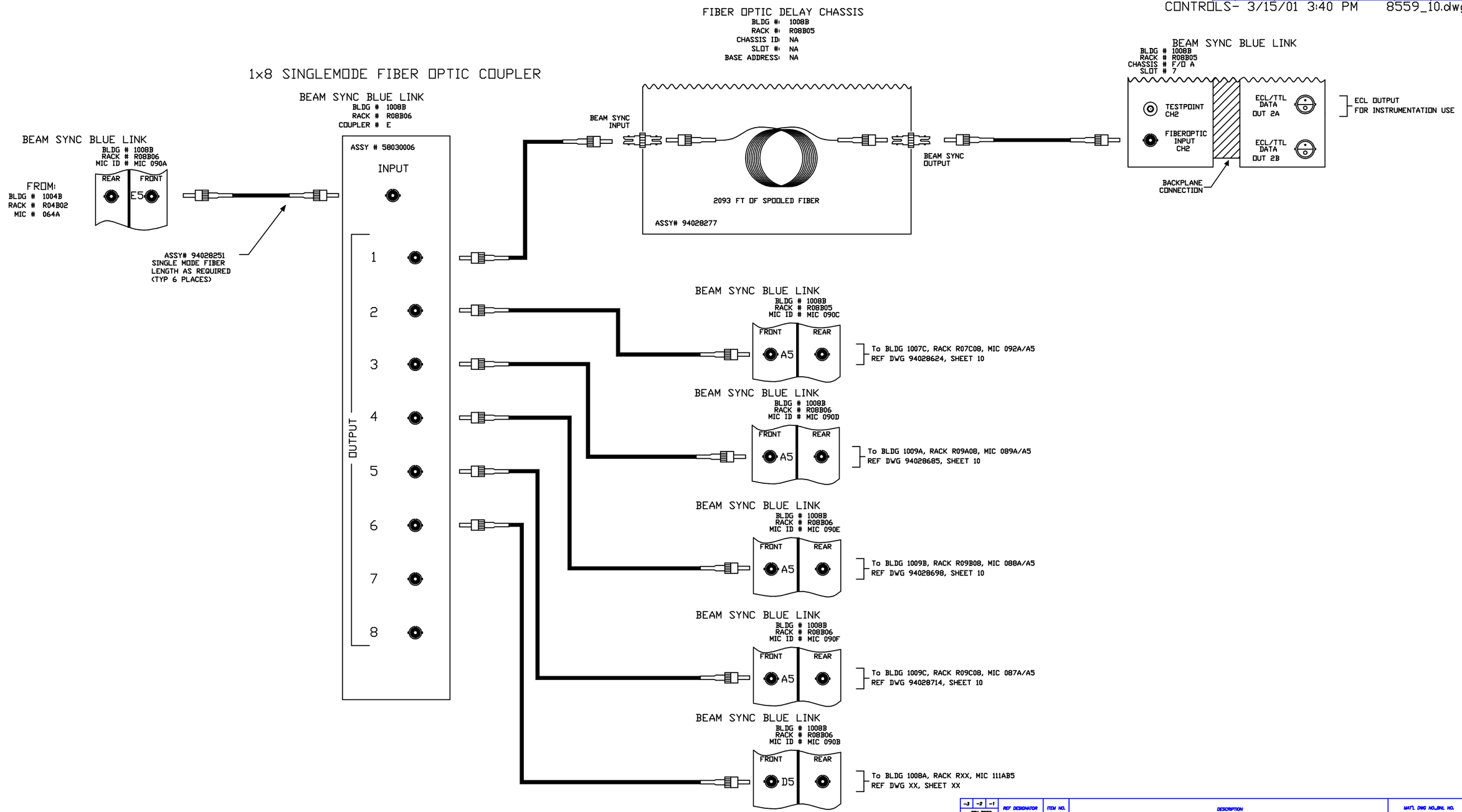

-3	-2	-1	REF DESIGNATOR	ITEM NO.	DESCRIPTION	MAT'L. DWG NO.,SPEC. NO.
QTY REQD						

INTERPRET IN GENERAL ACCORDANCE WITH ASME Y14.24M-1989

UNLESS OTHERWISE SPECIFIED DIMENSIONS ARE IN INCHES

DECIMAL TOLERANCES
.X ±.030
.XX ±.015
.XXX ±.005
ANGULAR TOLERANCE ± .5°

OUTSTANDING ECN

NA FINISH

BREAK SHARP EDGES
MAX. XX MIN. XX

Q.A. CATEGORY	A-3	DATE	
DRAWN BY	Ed Koropsak	6/5/98	
CHECKED BY			
DESIGN APPROVAL			
ENGINEER APPROVAL	R. MICHNOFF	6/5/98	
SUPVR. APPROVAL			

NEXT ASSEMBLY

BROOKHAVEN NATIONAL LABORATORY
UPTON, N.Y. 11973

RHIC CONTROLS WIRING DIAGRAM
SERVICE BLDG 1008B
BEAM SYNC BLUE LINK

SIZE D | DRAWING NUMBER 94028559 | REV. A

MATERIAL: ——— SCALE: NA WEIGHT: – SHEET 10

*AUTOCAD

Bill Venegas, BNL 6/30/2003 3:26 PM 8559_11.dwg

REV.	ZONE	ECN NO.	DATE	BY	CKR	APP.

FRONT END COMPUTER
BLDG #: 1008B
RACK #: R08B04
CHASSIS ID: CFE-8B-PS1
SLOT#: 1
FEC NAME: cfe-8B-ps1

DEVICE: MM-6702 MEMORY MODULE
BLDG #: 1008B
RACK #: R08B04
CHASSIS ID: CFE-8B-PS1
SLOT #: 2
A24 BASE ADDRESS: XXX

DEVICE: V108 UTILITY MODULE
BLDG #: 1008B
RACK #: R08B04
CHASSIS ID: CFE-8B-PS1
SLOT #: 3
A24 BASE ADDRESS: 0XF0004000

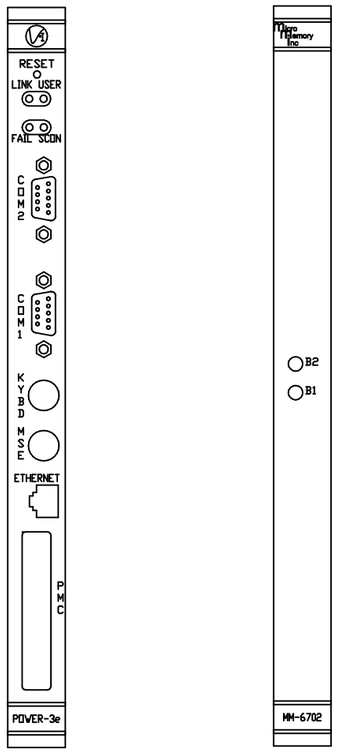

ETHERNET NETWORK

REF. NETWORK DIAGRAM

JUMPER LIST
1. REMOVE E1.
2. INSTALL E15.
3. SW3 CLOSE ALL POSITIONS.
4. SW2 CLOSE POSITIONS 7 AND 8.
5. SW1 CLOSE POSITIONS 2-8.
6. INSTALL E14 AND E25 TO ENABLE BATTERIES

EVENT LINK
BLDG #: 1008B
RACK #: R08B05
FANOUT #: A

RESET LINK
BLDG #: 1008B
RACK #: R08B05
FANOUT #: C

REAL TIME DATA LINK
BLDG #: 1008B
RACK #: R08B05
FANOUT #: B

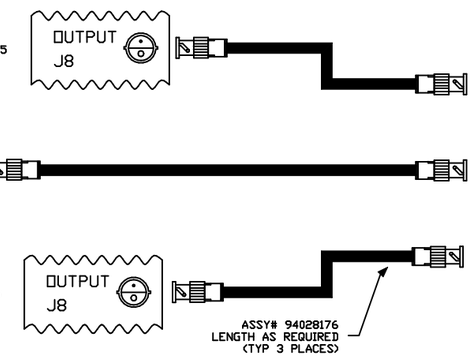

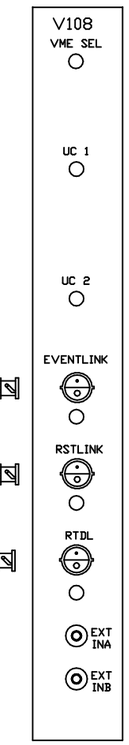

ASSY# 94028094

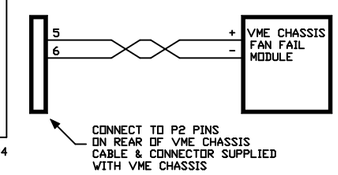

JUMPER LIST

E25 through E50 are configured for remote reset address at the time of board acceptance test.
DO NOT MODIFY!

Remote reset pulls VME SYS Reset.
E58-E60, E59-E61

A24 BASE ADDRESS= 4000h
E57-E13, E2-E14, E3-E15, E4-E16, E5-E17, E6-E18
E7-E19, E8-E20, E9-E21, E10-E22, E11-E24, E57-E23
SW1=OPEN
SW2=CLOSED
SW3=OPEN
SW4=OPEN

-3	-2	-1	REF DESIGNATOR	ITEM NO.	DESCRIPTION	MAT'L. DWG NO./INL NO.
QTY REQD						

INTERPRET IN GENERAL ACCORDANCE WITH ASME Y14.24M-1989

UNLESS OTHERWISE SPECIFIED DIMENSIONS ARE IN INCHES

DECIMAL TOLERANCES
.X ±.030
.XX ±.015
.XXX ±.005
ANGULAR TOLERANCE ± .5°

OUTSTANDING ECN

NA FINISH

BREAK SHARP EDGES MAX. XX MIN. XX

Q.A. CATEGORY A-3

		DATE
DRAWN BY	Venegas	8/30/99
CHECKED BY		
DESIGN APPROVAL		
ENGINEER APPROVAL	R. MICHNOFF	10/21/97
SUPVR. APPROVAL		

NEXT ASSEMBLY

BROOKHAVEN NATIONAL LABORATORY
UPTON, N.Y. 11973

RHIC CONTROLS WIRING DIAGRAM

SERV BLDG 1008B, VME CHASSIS CFE-8B-PS1

CPU/MEMORY /V108 UTIL MODULE

SIZE D | DRAWING NUMBER 94028559 | REV. A

MATERIAL: ——— SCALE: NA WEIGHT: – SHEET 11

*AUTOCAD

Bill Venegas, BNL 6/30/2003 3:40 PM 8559_12.dwg

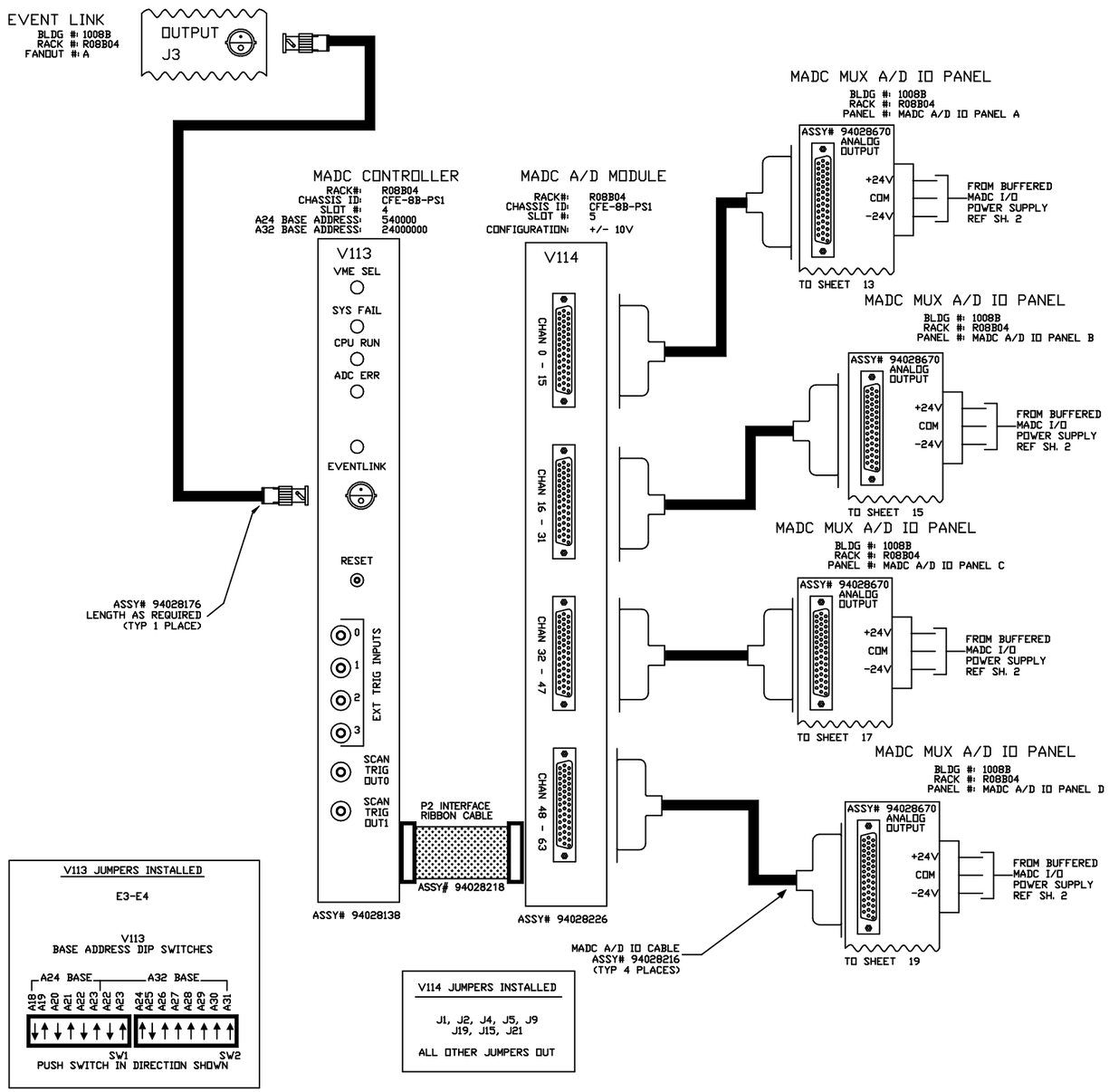

V113 JUMPERS INSTALLED

E3-E4

V113
BASE ADDRESS DIP SWITCHES

PUSH SWITCH IN DIRECTION SHOWN

V114 JUMPERS INSTALLED

J1, J2, J4, J5, J9
J19, J15, J21

ALL OTHER JUMPERS OUT

REV.	ZONE	ECN NO.	DATE	BY	CKR	APP.

-3	-2	-1	REF DESIGNATOR	ITEM NO.	DESCRIPTION	MAT'L DWG NO./SPEC. NO.
QTY REQD						

INTERPRET IN GENERAL ACCORDANCE WITH ASME Y14.24M-1989

UNLESS OTHERWISE SPECIFIED DIMENSIONS ARE IN INCHES

DECIMAL TOLERANCES
.X ±.030
.XX ±.015
.XXX ±.005
ANGULAR TOLERANCE
± .5°

NA FINISH

BREAK SHARP EDGES
MAX. XX MIN. XX

OUTSTANDING ECN

Q.A. CATEGORY A-3	DATE	
DRAWN BY Venegas	6/30/03	
CHECKED BY		
DESIGN APPROVAL		
ENGINEER APPROVAL		
SUPVR. APPROVAL		
NEXT ASSEMBLY		

BROOKHAVEN NATIONAL LABORATORY
UPTON, N.Y. 11973

RHIC CONTROLS WIRING DIAGRAM
1008B, VME CHASSIS CFE-8B-PS1
MADC SYSTEM

SIZE D | DRAWING NUMBER 94028559 | REV. A

MATERIAL: ——— SCALE: FULL WEIGHT: – SHEET 12

*AUTOCAD

REV.	ZONE	ECN NO.	DATE	BY	CKR	APP.

Bill Venegas, BNL 7/2/2003 1:15 PM 8559_13.dwg

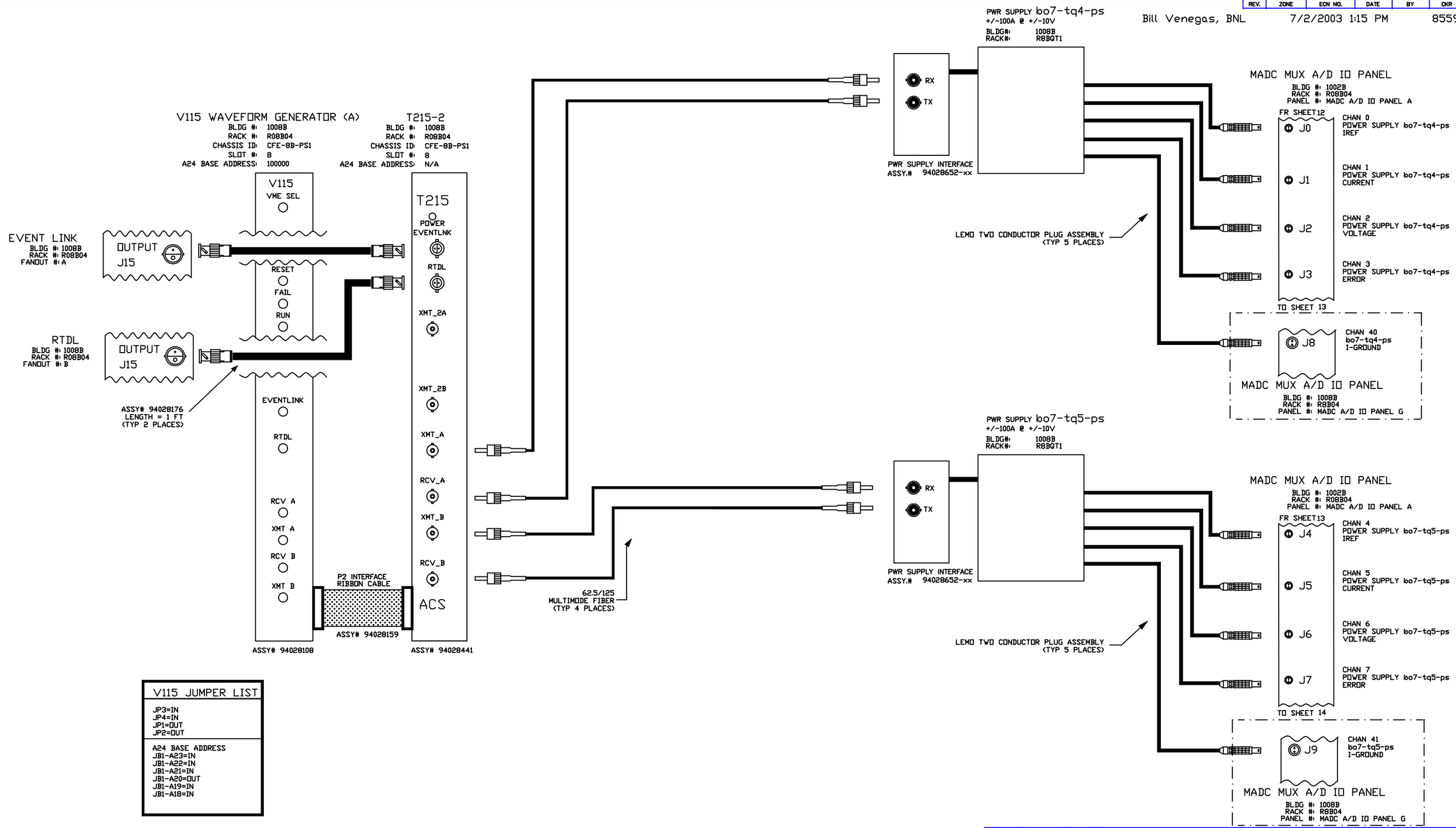

V115 JUMPER LIST
JP3=IN JP4=IN JP1=OUT JP2=OUT
A24 BASE ADDRESS JB1-A23=IN JB1-A22=IN JB1-A21=IN JB1-A20=OUT JB1-A19=IN JB1-A18=IN

-3	-2	-1	REF DESIGNATOR	ITEM NO.	DESCRIPTION	MAT'L DWG NO.,SPEC NO.
QTY REQD						

INTERPRET IN GENERAL ACCORDANCE WITH ASME Y14.24M-1989

UNLESS OTHERWISE SPECIFIED DIMENSIONS ARE IN INCHES

DECIMAL TOLERANCES
.X ±.030
.XX ±.015
.XXX ±.005
ANGULAR TOLERANCE
± .5°

OUTSTANDING ECN: NA
FINISH: ✓
BREAK SHARP EDGES
MAX. XX MIN. XX

Q.A. CATEGORY A-3

		DATE
DRAWN BY	Venegas	7/2/03
CHECKED BY		
DESIGN APPROVAL		
ENGINEER APPROVAL		
SUPVR. APPROVAL		

NEXT ASSEMBLY

BROOKHAVEN NATIONAL LABORATORY
UPTON, N.Y. 11973

RHIC CONTROLS WIRING DIAGRAM
BLDG. 1008B, CFE-8B-PS1
bo7-tq4-ps/bo7-tq5-ps

SIZE D | DRAWING NUMBER 94028559 | REV. A

MATERIAL: ——— SCALE: NA WEIGHT: – SHEET 13

*AUTOCAD

REV.	ZONE	ECN NO.	DATE	BY	CKR	APP.

Bill Venegas, BNL 7/2/2003 4:03 PM 8559_14.dwg

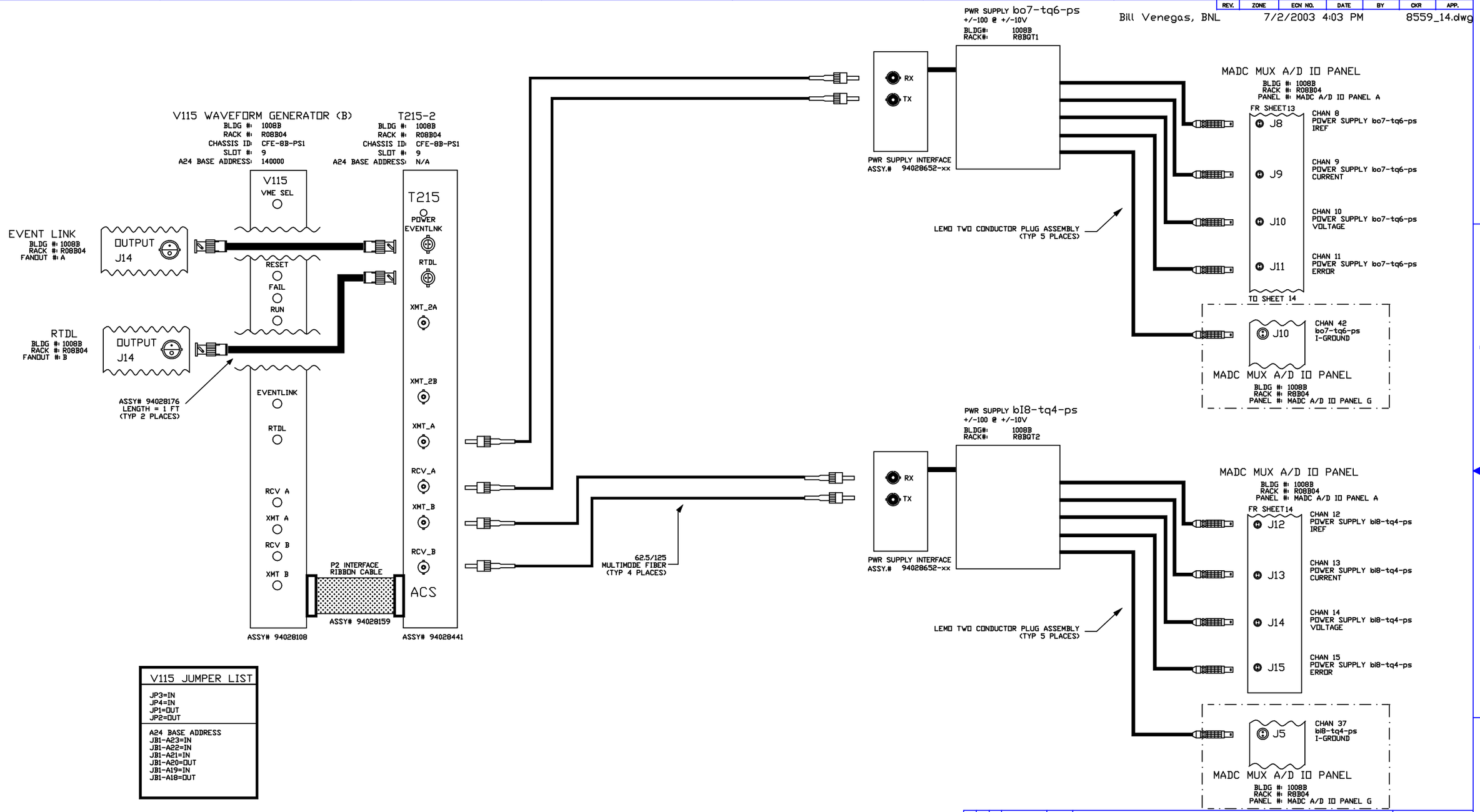

V115 JUMPER LIST
JP3=IN JP4=IN JP1=OUT JP2=OUT
A24 BASE ADDRESS JB1-A23=IN JB1-A22=IN JB1-A21=IN JB1-A20=OUT JB1-A19=IN JB1-A18=OUT

-3	-2	-1	REF DESIGNATOR	ITEM NO.	DESCRIPTION	MAT'L. DWG NO./INL NO.
QTY REQD						

INTERPRET IN GENERAL ACCORDANCE WITH ASME Y14.24M-1989

UNLESS OTHERWISE SPECIFIED DIMENSIONS ARE IN INCHES

DECIMAL TOLERANCES
.X ±.030
.XX ±.015
.XXX ±.005
ANGULAR TOLERANCE ± .5°

FINISH NA

BREAK SHARP EDGES MAX. XX MIN. XX

OUTSTANDING ECN

Q.A. CATEGORY A-3

		DATE
DRAWN BY	Venegas	7/2/03
CHECKED BY		
DESIGN APPROVAL		
ENGINEER APPROVAL		
SUPVR. APPROVAL		

NEXT ASSEMBLY

BROOKHAVEN NATIONAL LABORATORY
UPTON, N.Y. 11973

RHIC CONTROLS WIRING DIAGRAM
BLDG. 1008B, CFE-8B-PS1
bo7-tq6-ps/bi8-tq4-ps

SIZE D | DRAWING NUMBER 94028559 | REV. A

MATERIAL: ——— SCALE: NA WEIGHT: – SHEET 14

*AUTOCAD

REV.	ZONE	ECN NO.	DATE	BY	CKR	APP.

Bill Venegas, BNL 7/2/2003 4:17 PM 8559_15.dwg

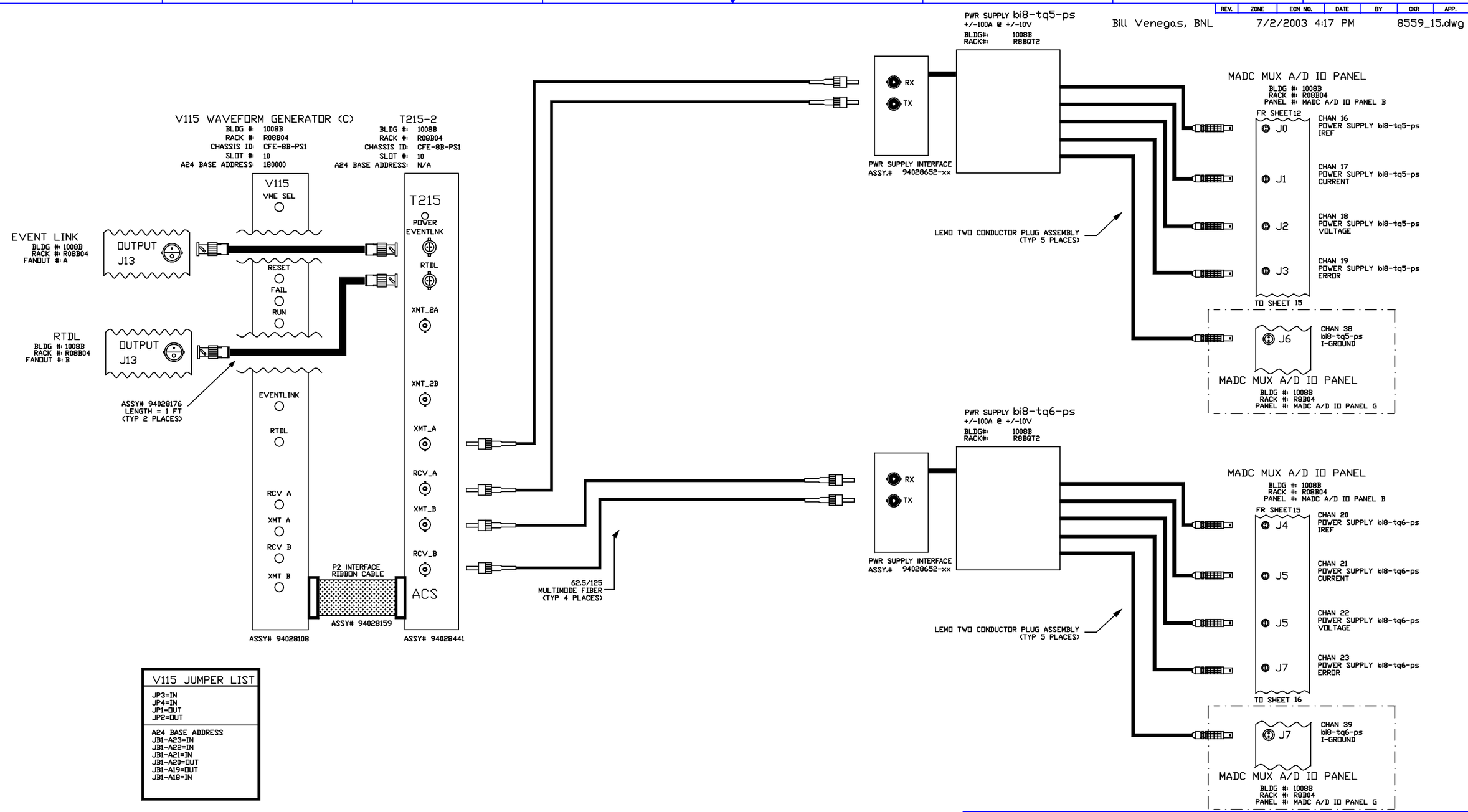

V115 JUMPER LIST
JP3=IN JP4=IN JP1=OUT JP2=OUT
A24 BASE ADDRESS JB1-A23=IN JB1-A22=IN JB1-A21=IN JB1-A20=OUT JB1-A19=OUT JB1-A18=IN

-3	-2	-1	REF DESIGNATOR	ITEM NO.	DESCRIPTION	MAT'L. DWG NO.,SPEC. NO.
QTY REQD						

INTERPRET IN GENERAL ACCORDANCE WITH ASME Y14.24M-1989

UNLESS OTHERWISE SPECIFIED DIMENSIONS ARE IN INCHES

DECIMAL TOLERANCES
.X ±.030
.XX ±.015
.XXX ±.005
ANGULAR TOLERANCE
± .5°

FINISH: NA

BREAK SHARP EDGES
MAX. XX MIN. XX

OUTSTANDING ECN

Q.A. CATEGORY A-3

		DATE
DRAWN BY	Venegas	7/7/03
CHECKED BY		
DESIGN APPROVAL		
ENGINEER APPROVAL		
SUPVR. APPROVAL		

NEXT ASSEMBLY

BROOKHAVEN NATIONAL LABORATORY
UPTON, N.Y. 11973

RHIC CONTROLS WIRING DIAGRAM
BLDG. 1008B, CFE-8B-PS1
bi8-tq5-ps/bi8-tq6-ps

SIZE D | DRAWING NUMBER 94028559 | REV. A

MATERIAL: ——— SCALE: NA WEIGHT: – SHEET 15

*AUTOCAD

REV.	ZONE	ECN NO.	DATE	BY	CKR	APP.

Controls 8/30/99 11:42 AM 8559_16.dwg

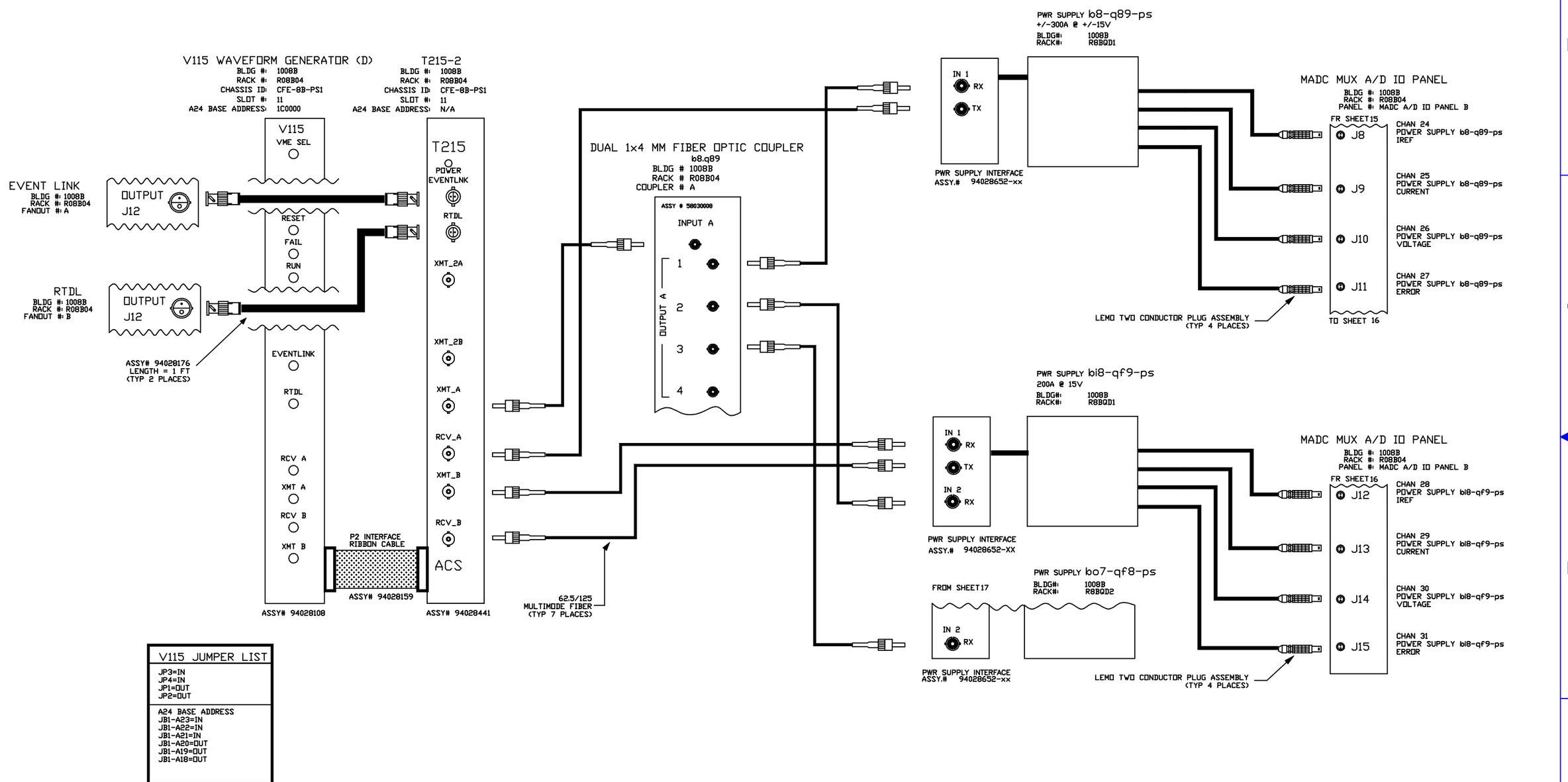

V115 JUMPER LIST
JP3=IN JP4=IN JP1=OUT JP2=OUT
A24 BASE ADDRESS JB1-A23=IN JB1-A22=IN JB1-A21=IN JB1-A20=OUT JB1-A19=OUT JB1-A18=OUT

-3	-2	-1	REF DESIGNATOR	ITEM NO.	DESCRIPTION	MAT'L DWG NO./BNL NO.
QTY REQD						

INTERPRET IN GENERAL ACCORDANCE WITH ASME Y14.24M-1989

UNLESS OTHERWISE SPECIFIED DIMENSIONS ARE IN INCHES

DECIMAL TOLERANCES
.X ±.030
.XX ±.015
.XXX ±.005
ANGULAR TOLERANCE
± .5°

NA FINISH

BREAK SHARP EDGES
MAX. XX MIN. XX

OUTSTANDING ECN

Q.A. CATEGORY A-3		DATE
DRAWN BY	Ed Koropsak	6/5/98
CHECKED BY		
DESIGN APPROVAL		
ENGINEER APPROVAL	R.MICHNOFF	6/5/98
SUPVR. APPROVAL		

NEXT ASSEMBLY

BROOKHAVEN NATIONAL LABORATORY
UPTON, N.Y. 11973

RHIC CONTROLS WIRING DIAGRAM

BLDG. 1008B, CFE-8B-PS1

b8-q89-ps/bi8-qf9-ps

SIZE D — DRAWING NUMBER 94028559 — REV. A

MATERIAL: ——— SCALE: NA WEIGHT: – SHEET 16

*AUTOCAD

REV.	ZONE	ECN NO.	DATE	BY	CKR	APP.

Controls 8/30/99 11:44 AM 8559_17.dwg

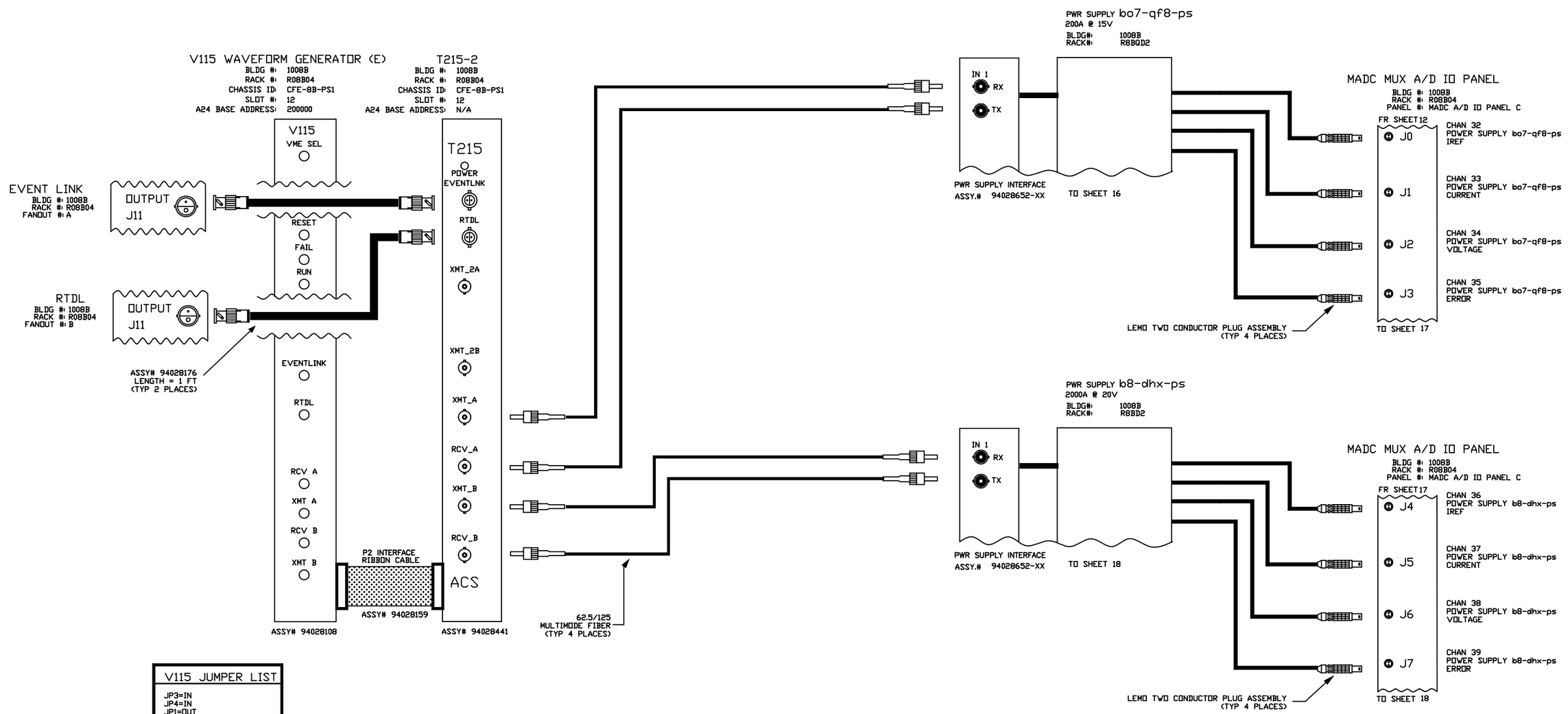

V115 JUMPER LIST
JP3=IN JP4=IN JP1=OUT JP2=OUT
A24 BASE ADDRESS JB1-A23=IN JB1-A22=IN JB1-A21=OUT JB1-A20=IN JB1-A19=IN JB1-A18=IN

-3	-2	-1	REF DESIGNATOR	ITEM NO.	DESCRIPTION	MAT'L. DWG NO.,SPEC. NO.
QTY REQD						

INTERPRET IN GENERAL ACCORDANCE WITH ASME Y14.24M-1989

UNLESS OTHERWISE SPECIFIED DIMENSIONS ARE IN INCHES
DECIMAL TOLERANCES
.X ±.030
.XX ±.015
.XXX ±.005
ANGULAR TOLERANCE
± .5°

NA FINISH
BREAK SHARP EDGES
MAX. XX MIN. XX

OUTSTANDING ECN

Q.A. CATEGORY A-3		DATE
DRAWN BY	Ed Koropsak	6/5/98
CHECKED BY		
DESIGN APPROVAL		
ENGINEER APPROVAL	R.MICHNOFF	6/5/98
SUPVR. APPROVAL		
NEXT ASSEMBLY		

BROOKHAVEN NATIONAL LABORATORY
UPTON, N.Y. 11973

RHIC CONTROLS WIRING DIAGRAM
BLDG. 1008B, CFE-8B-PS1
bo7-qf8-ps/b8-dhx-ps

SIZE D
94028559
DRAWING NUMBER
REV. A

MATERIAL: ——— SCALE: NA WEIGHT: – SHEET 17

*AUTOCAD

REV.	ZONE	ECN NO.	DATE	BY	CKR	APP.

Bill Venegas, BNL 7/1/2003 11:05 AM 8559_18.dwg

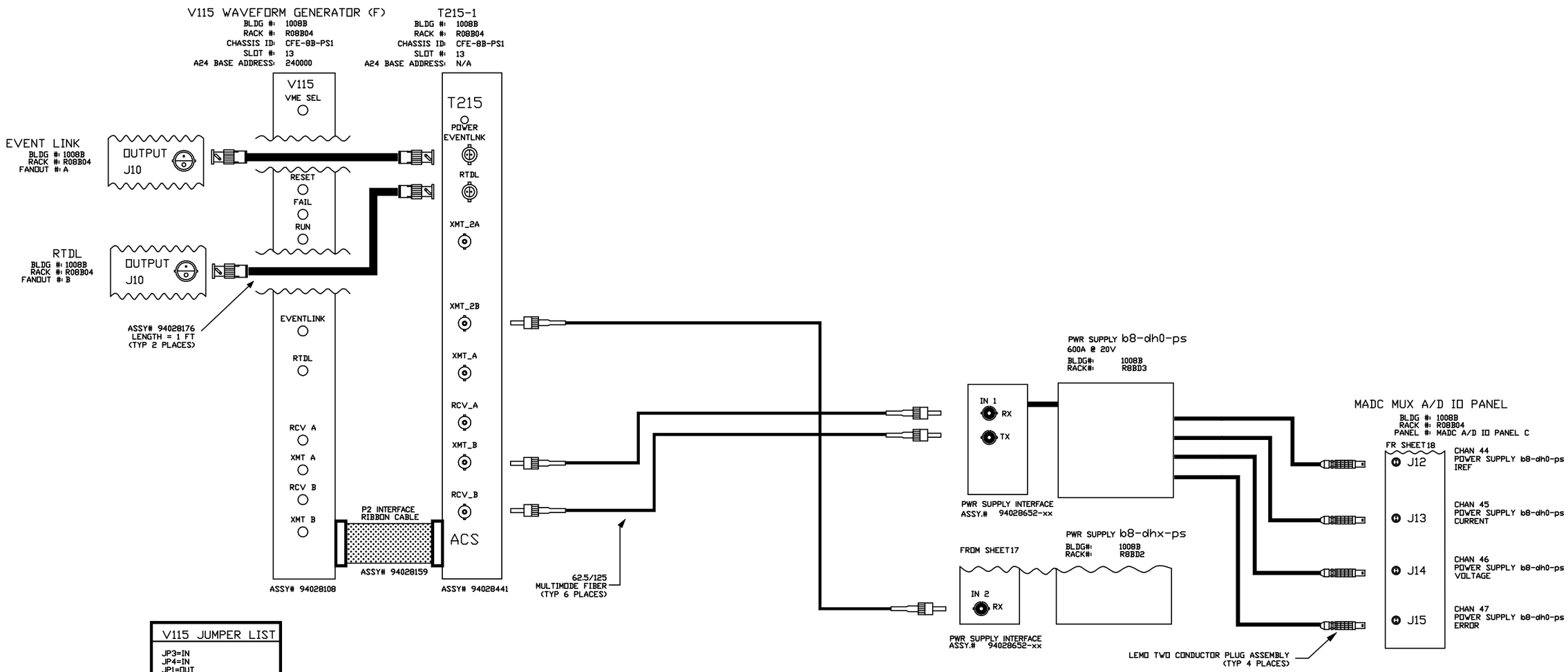

V115 JUMPER LIST
JP3=IN JP4=IN JP1=OUT JP2=OUT
A24 BASE ADDRESS JB1-A23=IN JB1-A22=IN JB1-A21=OUT JB1-A20=IN JB1-A19=IN JB1-A18=OUT

-3	-2	-1	REF DESIGNATOR	ITEM NO.	DESCRIPTION	MAT'L. DWG NO./BNL NO.
QTY REQD						

INTERPRET IN GENERAL ACCORDANCE WITH ASME Y14.24M-1989

UNLESS OTHERWISE SPECIFIED DIMENSIONS ARE IN INCHES

DECIMAL TOLERANCES
.X ±.030
.XX ±.015
.XXX ±.005
ANGULAR TOLERANCE
± .5°

NA FINISH

BREAK SHARP EDGES
MAX. XX MIN. XX

OUTSTANDING ECN

Q.A. CATEGORY A-3

		DATE
DRAWN BY	Venegas	7/1/98
CHECKED BY		
DESIGN APPROVAL		
ENGINEER APPROVAL		
SUPVR. APPROVAL		

NEXT ASSEMBLY

BROOKHAVEN NATIONAL LABORATORY
UPTON, N.Y. 11973

RHIC CONTROLS WIRING DIAGRAM
BLDG. 1008B, CFE-8B-PS1
b8-dh0-ps

SIZE D | DRAWING NUMBER 94028559 | REV. A

MATERIAL: ——— SCALE: NA WEIGHT: – SHEET 18

*AUTOCAD

Bill Venegas, BNL 7/9/2003 9:43 AM 8559_19.dwg

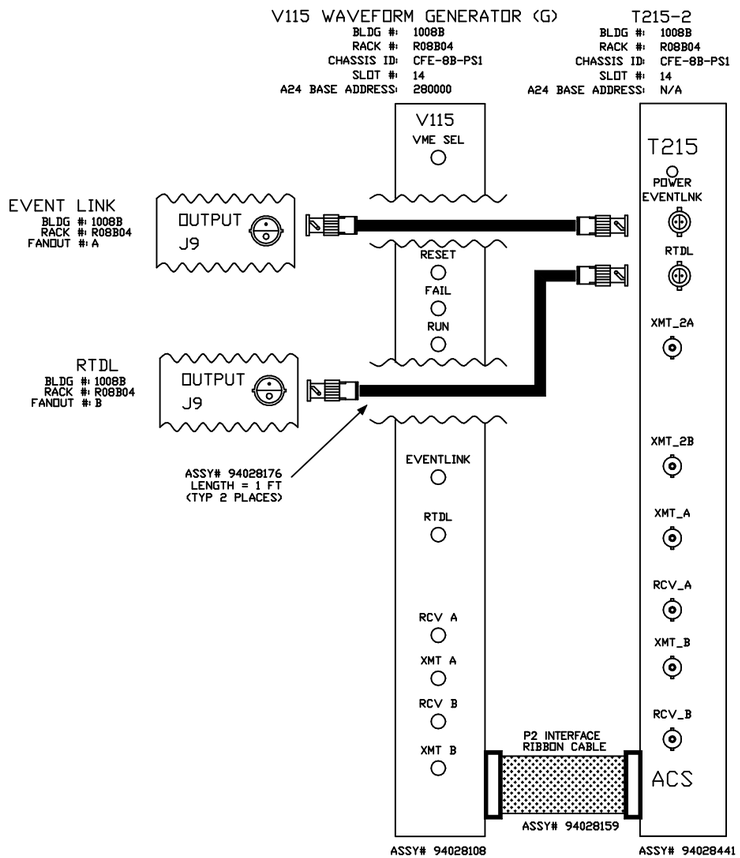

This WFG is being used by Al to monitor RTDL frames.

V115 JUMPER LIST
JP3=IN JP4=IN JP1=OUT JP2=OUT
A24 BASE ADDRESS JB1-A23=IN JB1-A22=IN JB1-A21=OUT JB1-A20=IN JB1-A19=OUT JB1-A18=IN

REV.	ZONE	ECN NO.	DATE	BY	CKR	APP.

-3	-2	-1	REF DESIGNATOR	ITEM NO.	DESCRIPTION	MAT'L. DWG NO.,BNL NO.
QTY REQD						

INTERPRET IN GENERAL ACCORDANCE WITH ASME Y14.24M-1989

UNLESS OTHERWISE SPECIFIED DIMENSIONS ARE IN INCHES

DECIMAL TOLERANCES
.X ±.030
.XX ±.015
.XXX ±.005
ANGULAR TOLERANCE
± .5°

NA FINISH

BREAK SHARP EDGES
MAX. XX MIN. XX

OUTSTANDING ECN

Q.A. CATEGORY A-3		DATE
DRAWN BY	Venegas	7/9/03
CHECKED BY		
DESIGN APPROVAL		
ENGINEER APPROVAL		
SUPVR. APPROVAL		
NEXT ASSEMBLY		

BROOKHAVEN NATIONAL LABORATORY
UPTON, N.Y. 11973

RHIC CONTROLS WIRING DIAGRAM
BLDG. 1008B, CFE-8B-PS1
RTDL MONITOR USING WFG

SIZE D
94028559
DRAWING NUMBER
REV. A

MATERIAL: ——— SCALE: NA WEIGHT: – SHEET 19

*AUTOCAD

REV.	ZONE	ECN NO.	DATE	BY	CKR	APP.

FRONT END COMPUTER
BLDG #: 1008B
RACK #: R08B03
CHASSIS ID: CFE-8B-PS2
SLOT#: 1
FEC NAME: cfe-8B-ps2

DEVICE: MM-6702 MEMORY MODULE
BLDG #: 1008B
RACK #: R08B03
CHASSIS ID: CFE-8B-PS2
SLOT #: 2
A24 BASE ADDRESS: XXX

DEVICE: V108 UTILITY MODULE
BLDG #: 1008B
RACK #: R08B03
CHASSIS ID: CFE-8B-PS2
SLOT #: 3
A24 BASE ADDRESS: 0XF0004000

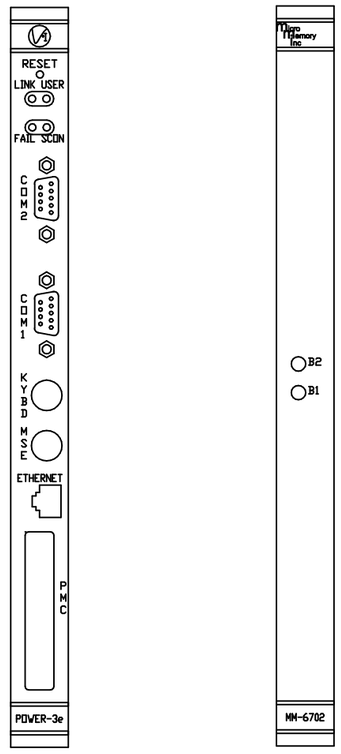

ETHERNET NETWORK

REF. NETWORK DIAGRAM

JUMPER LIST
1. REMOVE E1.
2. INSTALL E15.
3. SW3 CLOSE ALL POSITIONS.
4. SW2 CLOSE POSITIONS 7 AND 8.
5. SW1 CLOSE POSITIONS 2-8.
6. INSTALL E14 AND E25 TO ENABLE BATTERIES

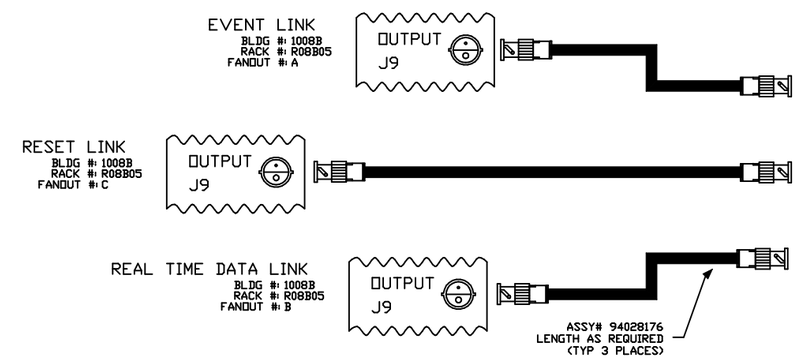

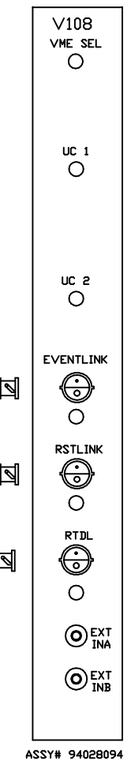

ASSY# 94028094

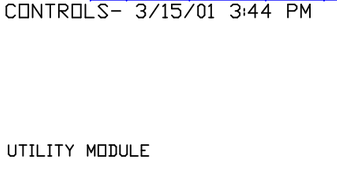

CONNECT TO P2 PINS
ON REAR OF VME CHASSIS
CABLE & CONNECTOR SUPPLIED
WITH VME CHASSIS

JUMPER LIST

E25 through E50 are configured for remote reset address
at the time of board acceptance test.
DO NOT MODIFY!

Remote reset pulls VME SYS Reset.
E58-E60, E59-E61

A24 BASE ADDRESS= 4000h
E57-E13, E2-E14, E3-E15, E4-E16, E5-E17, E6-E18
E7-E19, E8-E20, E9-E21, E10-E22, E11-E24, E57-E23
SW1=OPEN
SW2=CLOSED
SW3=OPEN
SW4=OPEN

-3	-2	-1	REF DESIGNATOR	ITEM NO.	DESCRIPTION	MAT'L. DWG NO.,SHL NO.
QTY REQD						

INTERPRET IN GENERAL ACCORDANCE WITH ASME Y14.24M-1989

UNLESS OTHERWISE SPECIFIED DIMENSIONS ARE IN INCHES

DECIMAL TOLERANCES
.X ±.030
.XX ±.015
.XXX ±.005
ANGULAR TOLERANCE ± .5°

OUTSTANDING ECN: NA

FINISH: NA

BREAK SHARP EDGES MAX. XX MIN. XX

Q.A. CATEGORY	A-3	DATE	
DRAWN BY	Venegas	8/30/99	
CHECKED BY			
DESIGN APPROVAL			
ENGINEER APPROVAL	R. MICHNOFF	10/21/97	
SUPVR. APPROVAL			

NEXT ASSEMBLY

BROOKHAVEN NATIONAL LABORATORY
UPTON, N.Y. 11973

RHIC CONTROLS WIRING DIAGRAM

SERV BLDG 1008B, VME CHASSIS CFE-8B-PS2

CPU/MEMORY /V108 UTIL MODULE

SIZE: D
DRAWING NUMBER: 94028559
REV.: A

MATERIAL: ——— SCALE: NA WEIGHT: – SHEET 28

*AUTOCAD

REV.	ZONE	ECN NO.	DATE	BY	CKR	APP.

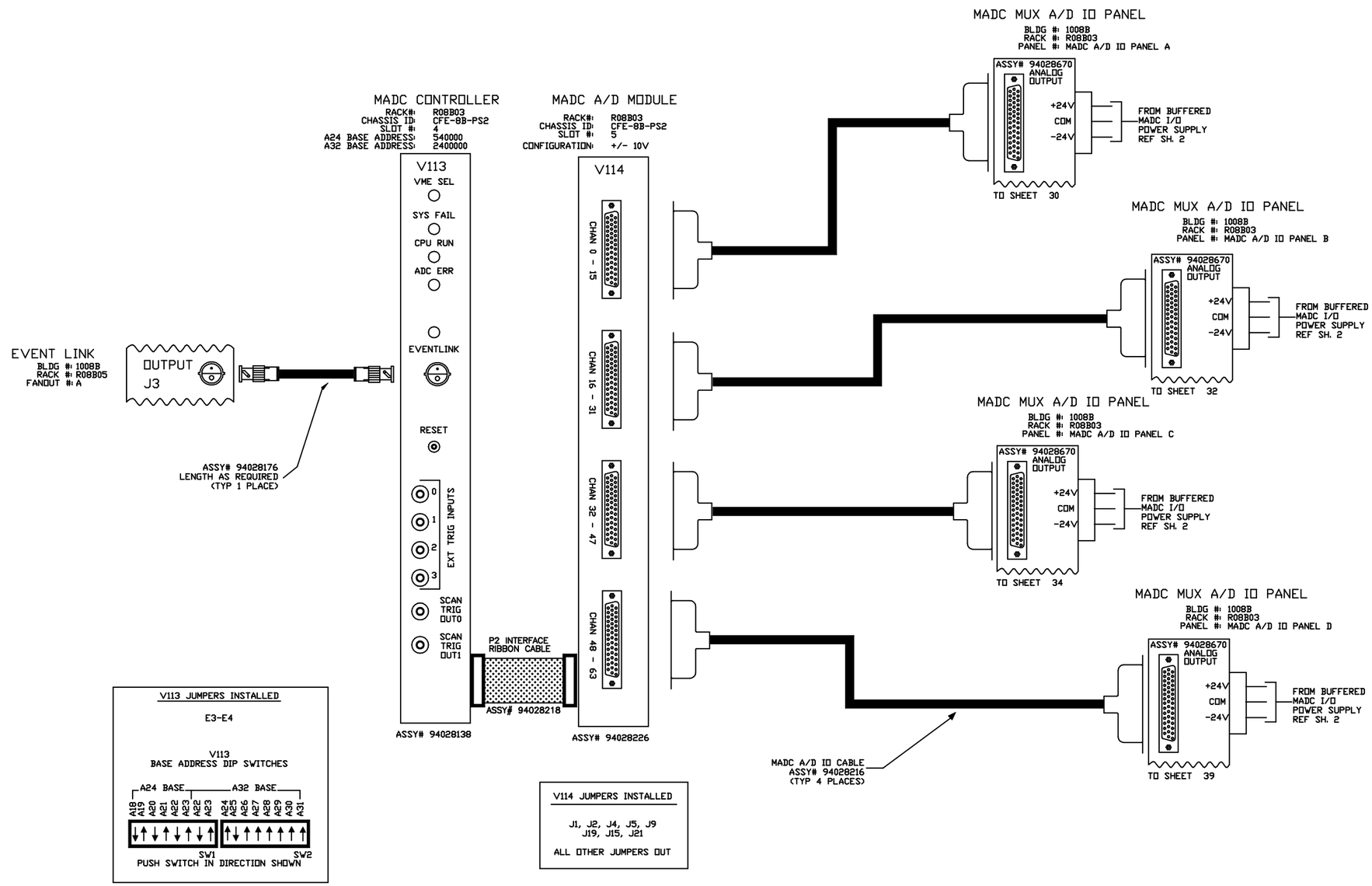

V113 JUMPERS INSTALLED

E3-E4

V113
BASE ADDRESS DIP SWITCHES

PUSH SWITCH IN DIRECTION SHOWN

V114 JUMPERS INSTALLED

J1, J2, J4, J5, J9
J19, J15, J21

ALL OTHER JUMPERS OUT

-3	-2	-1	REF DESIGNATOR	ITEM NO.	DESCRIPTION	MAT'L DWG NO./SHL NO.
QTY REQD						

INTERPRET IN GENERAL ACCORDANCE WITH ASME Y14.24M-1989

UNLESS OTHERWISE SPECIFIED DIMENSIONS ARE IN INCHES

DECIMAL TOLERANCES
.X ±.030
.XX ±.015
.XXX ±.005
ANGULAR TOLERANCE
± .5°

FINISH: NA

BREAK SHARP EDGES MAX. XX MIN. XX

OUTSTANDING ECN

Q.A. CATEGORY A-3		DATE
DRAWN BY	Ed Koropsak	6/5/98
CHECKED BY		
DESIGN APPROVAL		
ENGINEER APPROVAL	R. MICHNOFF	6/5/98
SUPVR. APPROVAL		

NEXT ASSEMBLY

BROOKHAVEN NATIONAL LABORATORY
UPTON, N.Y. 11973

RHIC CONTROLS WIRING DIAGRAM

1008B, VME CHASSIS CFE-8B-PS2

MADC SYSTEM

SIZE D — DRAWING NUMBER 94028559 — REV. A

MATERIAL: ——— SCALE: NA WEIGHT: – SHEET 29

*AUTOCAD

REV.	ZONE	ECN NO.	DATE	BY	CKR	APP.

Bill Venegas, BNL 7/8/2003 9:57 AM 8559_30.dwg

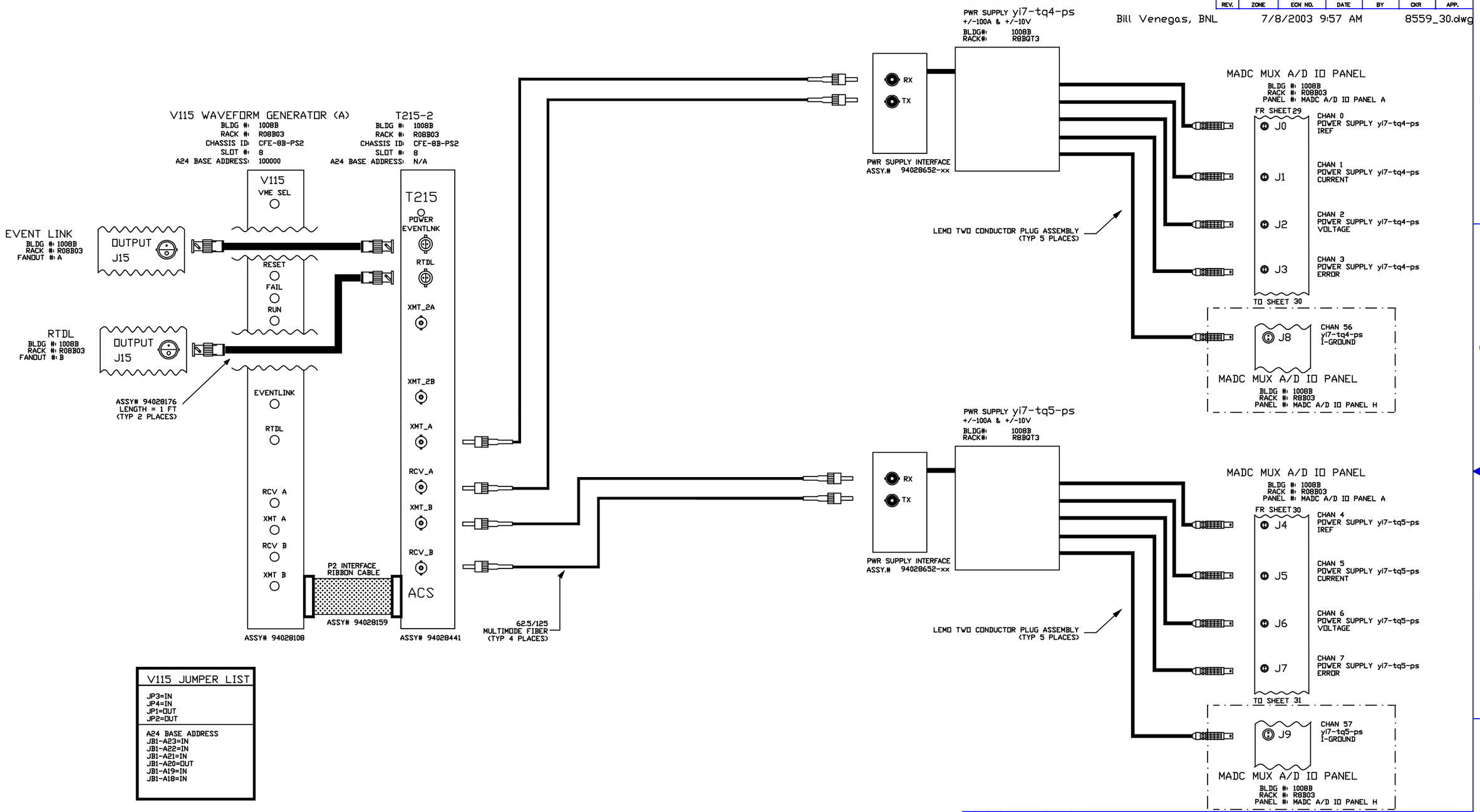

V115 JUMPER LIST
JP3=IN JP4=IN JP1=OUT JP2=OUT
A24 BASE ADDRESS JB1-A23=IN JB1-A22=IN JB1-A21=IN JB1-A20=OUT JB1-A19=IN JB1-A18=IN

-3	-2	-1	REF DESIGNATOR	ITEM NO.	DESCRIPTION	MAT'L DWG NO./BNL NO.
QTY REQD						

INTERPRET IN GENERAL ACCORDANCE WITH ASME Y14.24M-1989

UNLESS OTHERWISE SPECIFIED DIMENSIONS ARE IN INCHES

DECIMAL TOLERANCES
.X ±.030
.XX ±.015
.XXX ±.005
ANGULAR TOLERANCE
± .5°

OUTSTANDING ECN

NA FINISH

BREAK SHARP EDGES
MAX. XX MIN. XX

Q.A. CATEGORY A-3		DATE
DRAWN BY	Venegas	7/8/03
CHECKED BY		
DESIGN APPROVAL		
ENGINEER APPROVAL		
SUPVR. APPROVAL		

NEXT ASSEMBLY

BROOKHAVEN NATIONAL LABORATORY
UPTON, N.Y. 11973

RHIC CONTROLS WIRING DIAGRAM
BLDG. 1008B, CFE-8B-PS2
yi7-tq4-ps/yi7-tq5-ps

SIZE D | DRAWING NUMBER 94028559 | REV. A

MATERIAL: ——— | SCALE: NA | WEIGHT: – | SHEET 30

*AUTOCAD

REV.	ZONE	ECN NO.	DATE	BY	CKR	APP.

Bill Venegas, BNL 7/8/2003 9:23 AM 8559_31.dwg

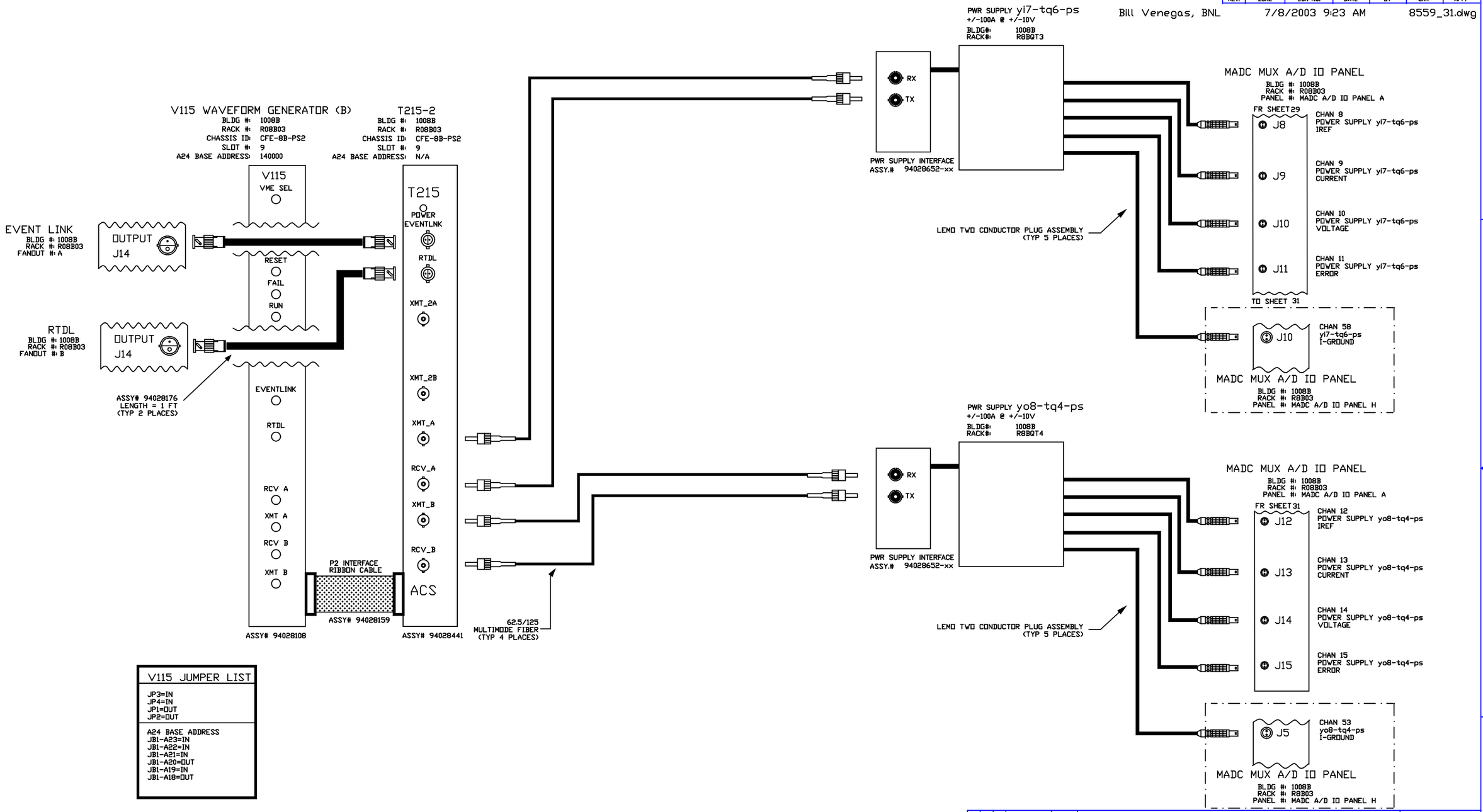

V115 JUMPER LIST
JP3=IN JP4=IN JP1=OUT JP2=OUT
A24 BASE ADDRESS JB1-A23=IN JB1-A22=IN JB1-A21=IN JB1-A20=OUT JB1-A19=IN JB1-A18=OUT

-3	-2	-1	REF DESIGNATOR	ITEM NO.	DESCRIPTION	MAT'L DWG NO./BNL NO.
QTY REQD						

INTERPRET IN GENERAL ACCORDANCE WITH ASME Y14.24M-1989

UNLESS OTHERWISE SPECIFIED DIMENSIONS ARE IN INCHES

DECIMAL TOLERANCES
.X ±.030
.XX ±.015
.XXX ±.005
ANGULAR TOLERANCE ± .5°

NA FINISH

BREAK SHARP EDGES MAX. XX MIN. XX

OUTSTANDING ECN

Q.A. CATEGORY A-3

		DATE
DRAWN BY	Venegas	7/8/03
CHECKED BY		
DESIGN APPROVAL		
ENGINEER APPROVAL		
SUPVR. APPROVAL		

NEXT ASSEMBLY

BROOKHAVEN NATIONAL LABORATORY
UPTON, N.Y. 11973

RHIC CONTROLS WIRING DIAGRAM

BLDG. 1008B, CFE-8B-PS2

yi7-tq6-ps/yo8-tq4-ps

SIZE D — 94028559 — REV. A

DRAWING NUMBER

MATERIAL: ——— SCALE: NA WEIGHT: – SHEET 31

*AUTOCAD

REV.	ZONE	ECN NO.	DATE	BY	CKR	APP.

Bill Venegas, BNL 7/8/2003 10:51 AM 8559_32.dwg

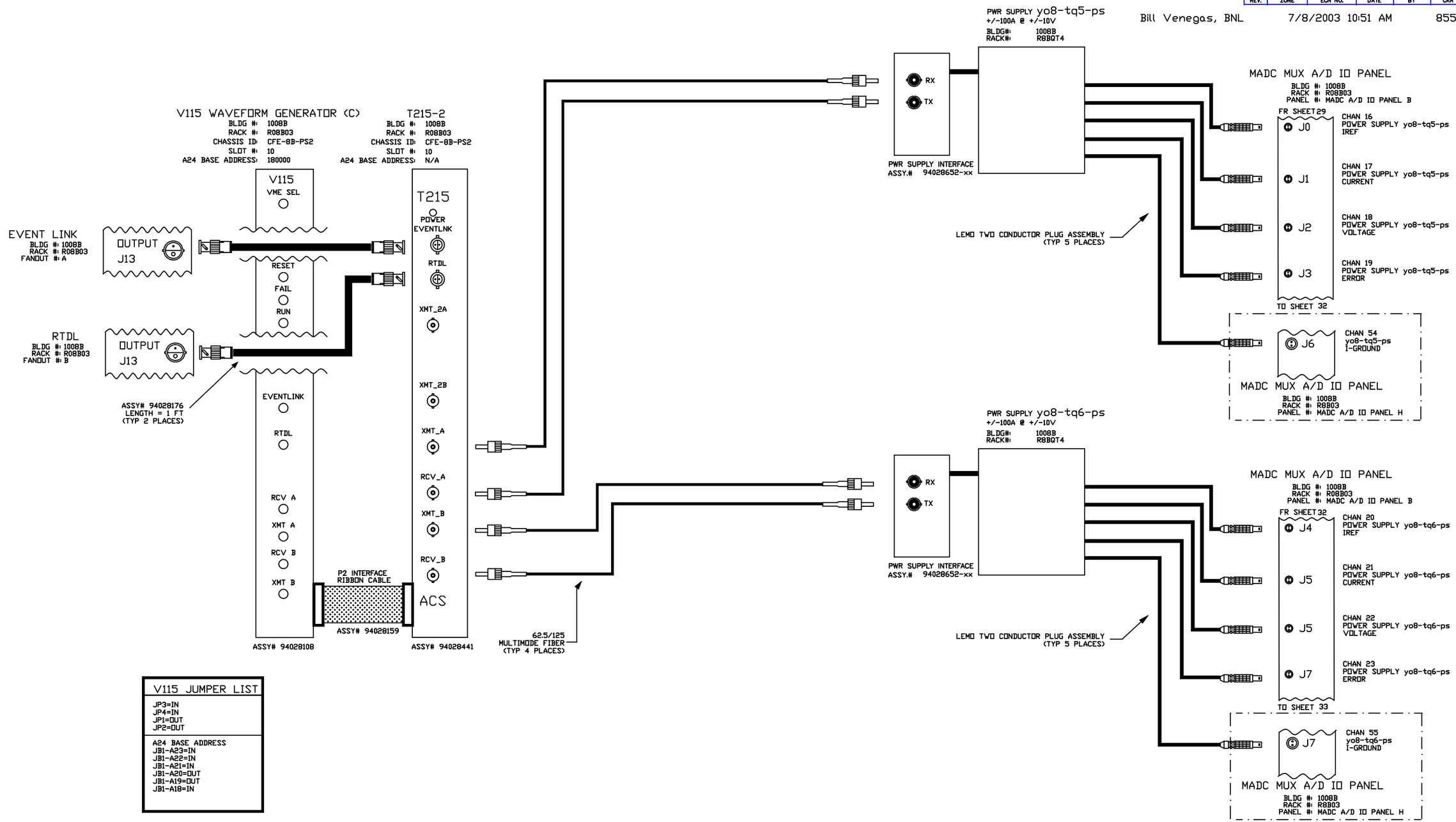

V115 JUMPER LIST

JP3=IN
JP4=IN
JP1=OUT
JP2=OUT

A24 BASE ADDRESS
JB1-A23=IN
JB1-A22=IN
JB1-A21=IN
JB1-A20=OUT
JB1-A19=OUT
JB1-A18=IN

-3	-2	-1	REF DESIGNATOR	ITEM NO.	DESCRIPTION	MAT'L DWG NO./BNL NO.
QTY REQD						

INTERPRET IN GENERAL ACCORDANCE WITH ASME Y14.24M-1989

UNLESS OTHERWISE SPECIFIED DIMENSIONS ARE IN INCHES

DECIMAL TOLERANCES
.X ±.030
.XX ±.015
.XXX ±.005
ANGULAR TOLERANCE
± .5°

NA FINISH

BREAK SHARP EDGES
MAX. XX MIN. XX

OUTSTANDING ECN

Q.A. CATEGORY A-3

		DATE
DRAWN BY	Venegas	7/8/03
CHECKED BY		
DESIGN APPROVAL		
ENGINEER APPROVAL		
SUPVR. APPROVAL		

NEXT ASSEMBLY

BROOKHAVEN NATIONAL LABORATORY
UPTON, N.Y. 11973

RHIC CONTROLS WIRING DIAGRAM
BLDG. 1008B, CFE-8B-PS2
yo8-tq5-ps/yo8-tq6-ps

SIZE D
94028559
DRAWING NUMBER
REV. A

MATERIAL: ——— SCALE: NA WEIGHT: – SHEET 32

*AUTOCAD

REV.	ZONE	ECN NO.	DATE	BY	CKR	APP.

Controls 8/30/99 1:25 PM 8559_33.dwg

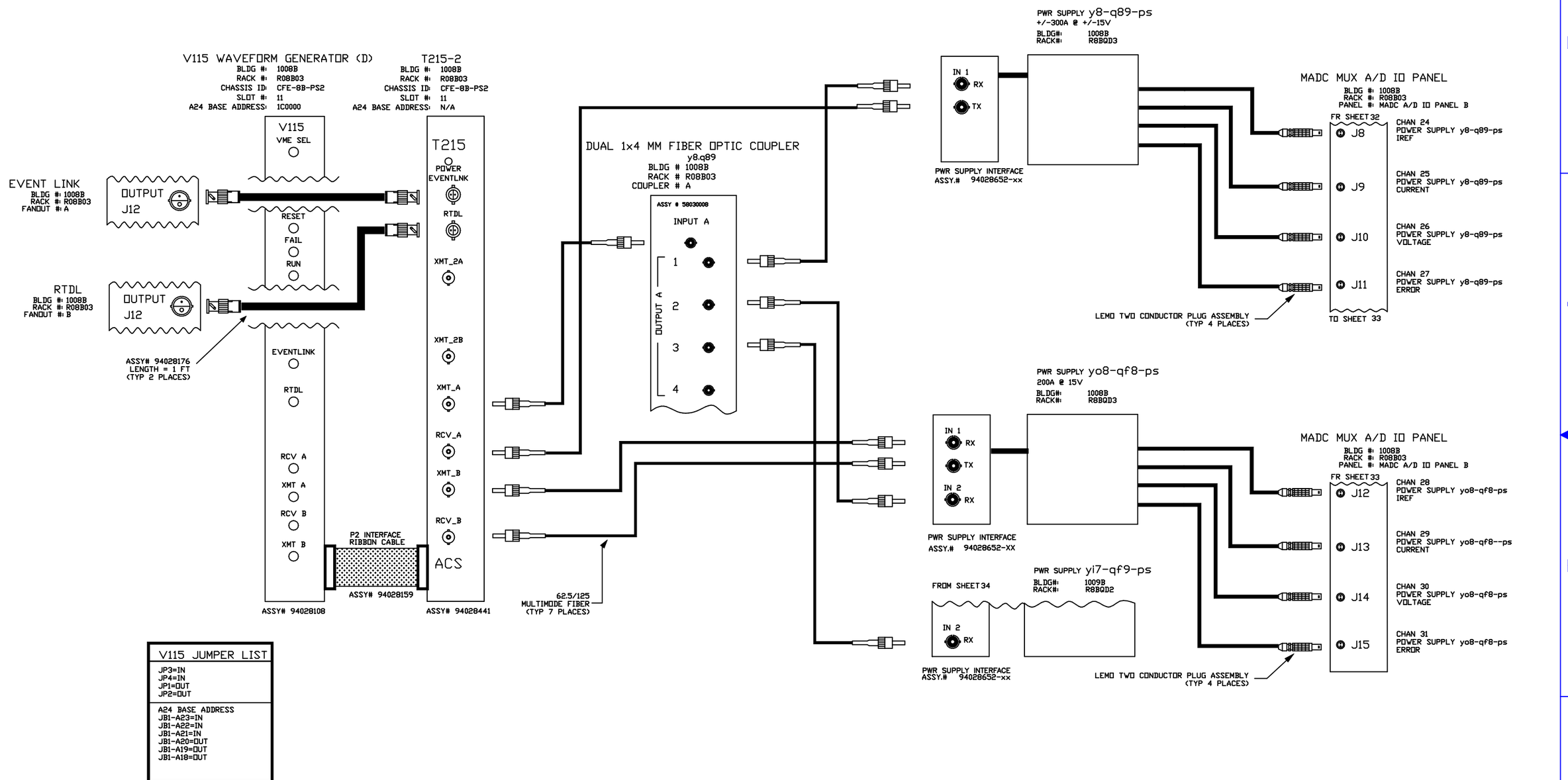

V115 JUMPER LIST
JP3=IN JP4=IN JP1=OUT JP2=OUT
A24 BASE ADDRESS JB1-A23=IN JB1-A22=IN JB1-A21=IN JB1-A20=OUT JB1-A19=OUT JB1-A18=OUT

-3	-2	-1	REF DESIGNATOR	ITEM NO.	DESCRIPTION	MAT'L DWG NO.,BNL NO.
QTY REQD						

INTERPRET IN GENERAL ACCORDANCE WITH ASME Y14.24M-1989

UNLESS OTHERWISE SPECIFIED DIMENSIONS ARE IN INCHES

DECIMAL TOLERANCES
.X ±.030
.XX ±.015
.XXX ±.005
ANGULAR TOLERANCE
± .5°

NA FINISH

BREAK SHARP EDGES
MAX. XX MIN. XX

OUTSTANDING ECN

Q.A. CATEGORY A-3		DATE
DRAWN BY	Ed Koropsak	6/15/98
CHECKED BY		
DESIGN APPROVAL		
ENGINEER APPROVAL	R.MICHNOFF	6/15/98
SUPVR. APPROVAL		

NEXT ASSEMBLY

BROOKHAVEN NATIONAL LABORATORY
UPTON, N.Y. 11973

RHIC CONTROLS WIRING DIAGRAM

BLDG. 1008B, CFE-8B-PS1

y8-q89-ps/yo8-qf8-ps

SIZE D — DRAWING NUMBER 94028559 — REV. A

MATERIAL: ——— SCALE: NA WEIGHT: – SHEET 33

*AUTOCAD

REV.	ZONE	ECN NO.	DATE	BY	CKR	APP.

Controls 8/30/99 1:28 PM 8559_34.dwg

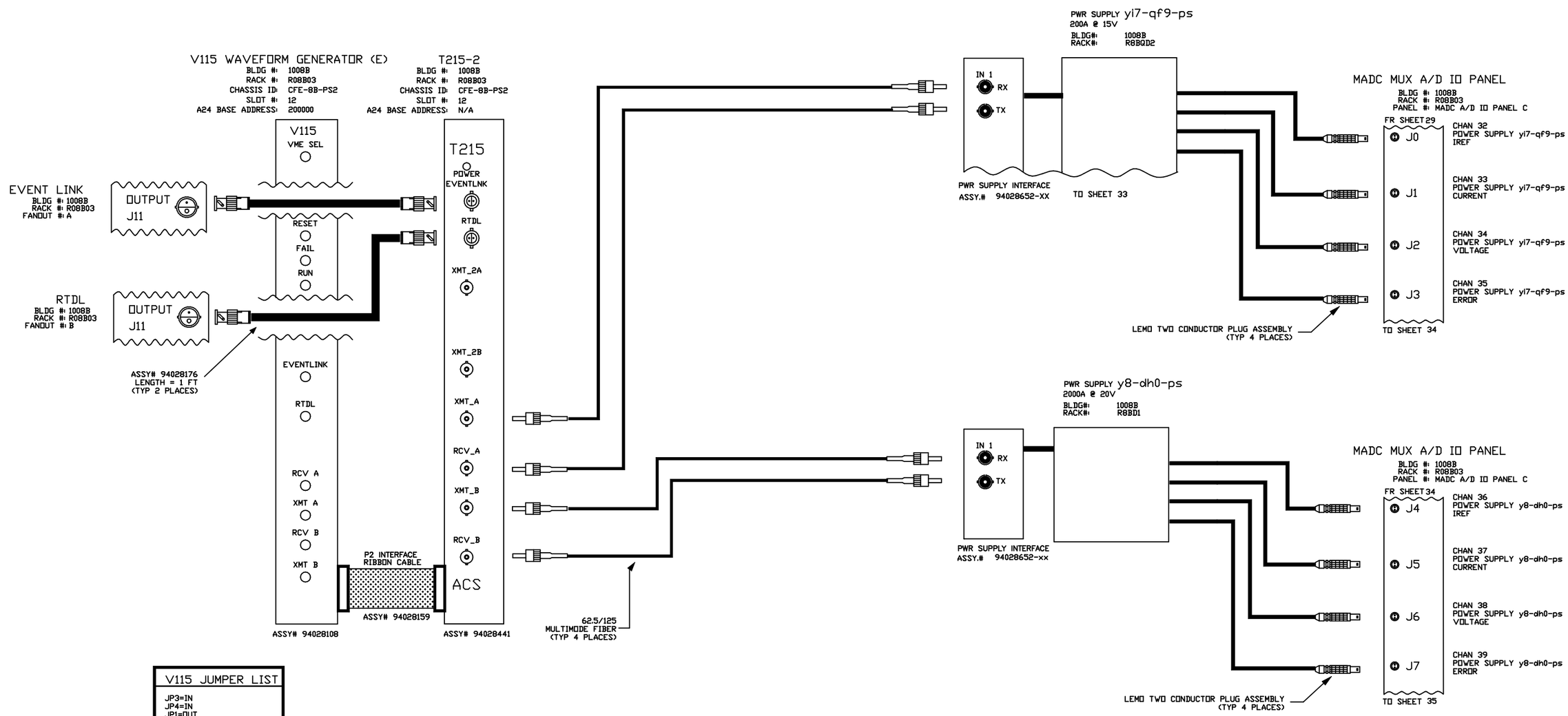

V115 JUMPER LIST
JP3=IN JP4=IN JP1=OUT JP2=OUT
A24 BASE ADDRESS JB1-A23=IN JB1-A22=IN JB1-A21=OUT JB1-A20=IN JB1-A19=IN JB1-A18=IN

-3	-2	-1	REF DESIGNATOR	ITEM NO.	DESCRIPTION	MAT'L. DWG NO./BNL NO.
QTY REQD						

INTERPRET IN GENERAL ACCORDANCE WITH ASME Y14.24M-1989

UNLESS OTHERWISE SPECIFIED DIMENSIONS ARE IN INCHES

DECIMAL TOLERANCES
.X ±.030
.XX ±.015
.XXX ±.005
ANGULAR TOLERANCE
± .5°

NA FINISH — BREAK SHARP EDGES — MAX. XX MIN. XX

OUTSTANDING ECN

Q.A. CATEGORY A-3		DATE
DRAWN BY	Ed Koropsak	6/15/98
CHECKED BY		
DESIGN APPROVAL		
ENGINEER APPROVAL	R.MICHNOFF	6/15/98
SUPVR. APPROVAL		

NEXT ASSEMBLY

BROOKHAVEN NATIONAL LABORATORY
UPTON, N.Y. 11973

RHIC CONTROLS WIRING DIAGRAM
BLDG. 1008B, CFE-8B-PS2
yi7-qf9-ps/y8-dh0-ps

SIZE D — DRAWING NUMBER 94028559 — REV. A

MATERIAL: ——— SCALE: NA WEIGHT: – SHEET 34

*AUTOCAD

REV.	ZONE	ECN NO.	DATE	BY	CKR	APP.

Bill Venegas, BNL 7/8/2003 2:26 PM 8559_47.dwg

MADC MUX A/D IO PANEL
BLDG #: 1008B
RACK #: R08B04
PANEL #: MADC A/D IO PANEL D
FR SHEET 29
- J0 — CHAN 48 POWER SUPPLY IREF
- J1 — CHAN 49 POWER SUPPLY CURRENT
- J2 — CHAN 50 POWER SUPPLY VOLTAGE
- J3 — CHAN 51 POWER SUPPLY ERROR

TO SHEET 47

MADC MUX A/D IO PANEL
BLDG #: 1008B
RACK #: R08B04
PANEL #: MADC A/D IO PANEL D
FR SHEET 47
- J12 — CHAN 60 POWER SUPPLY IREF
- J13 — CHAN 61 POWER SUPPLY CURRENT
- J14 — CHAN 62 POWER SUPPLY VOLTAGE
- J15 — CHAN 63 POWER SUPPLY ERROR

TO SHEET NONE

MADC MUX A/D IO PANEL
BLDG #: 1008B
RACK #: R08B03
PANEL #: MADC A/D IO PANEL D
FR SHEET 29
- J0 — CHAN 48 POWER SUPPLY IREF
- J1 — CHAN 49 POWER SUPPLY CURRENT
- J2 — CHAN 50 POWER SUPPLY VOLTAGE
- J3 — CHAN 51 POWER SUPPLY ERROR

TO SHEET 47

MADC MUX A/D IO PANEL
BLDG #: 1008B
RACK #: R08B03
PANEL #: MADC A/D IO PANEL D
FR SHEET 47
- J12 — CHAN 60 POWER SUPPLY IREF
- J13 — CHAN 61 POWER SUPPLY CURRENT
- J14 — CHAN 62 POWER SUPPLY VOLTAGE
- J15 — CHAN 63 POWER SUPPLY ERROR

TO SHEET NONE

MADC MUX A/D IO PANEL
BLDG #: 1008B
RACK #: R08B03
PANEL #: MADC A/D IO PANEL G
FR SHEET 61
- J0 — CHAN 32 POWER SUPPLY IREF
- J1 — CHAN 33 POWER SUPPLY CURRENT
- J2 — CHAN 34 POWER SUPPLY VOLTAGE
- J3 — CHAN 35 POWER SUPPLY ERROR

TO SHEET 47

MADC MUX A/D IO PANEL
BLDG #: 1008B
RACK #: R08B04
PANEL #: MADC A/D IO PANEL G
FR SHEET 61
- J0 — CHAN 32 POWER SUPPLY IREF
- J1 — CHAN 33 POWER SUPPLY CURRENT
- J2 — CHAN 34 POWER SUPPLY VOLTAGE
- J3 — CHAN 35 POWER SUPPLY ERROR

TO SHEET 47

MADC MUX A/D IO PANEL
BLDG #: 1008B
RACK #: R08B03
PANEL #: MADC A/D IO PANEL G
FR SHEET 47
- J4 — CHAN 36 POWER SUPPLY IREF
- J5 — CHAN 37 POWER SUPPLY CURRENT
- J6 — CHAN 38 POWER SUPPLY VOLTAGE
- J7 — CHAN 39 POWER SUPPLY ERROR

TO SHEET 47

MADC MUX A/D IO PANEL
BLDG #: 1008B
RACK #: R08B04
PANEL #: MADC A/D IO PANEL G
FR SHEET 47
- J4 — CHAN 36 POWER SUPPLY SETPOINT

TO SHEET 14

MADC MUX A/D IO PANEL
BLDG #: 1008B
RACK #: R08B04
PANEL #: MADC A/D IO PANEL D
FR SHEET 47
- J4 — CHAN 52 POWER SUPPLY IREF
- J5 — CHAN 53 POWER SUPPLY CURRENT
- J6 — CHAN 54 POWER SUPPLY VOLTAGE
- J7 — CHAN 55 POWER SUPPLY ERROR

TO SHEET 47

MADC MUX A/D IO PANEL
BLDG #: 1008B
RACK #: R08B03
PANEL #: MADC A/D IO PANEL D
FR SHEET 47
- J4 — CHAN 52 POWER SUPPLY IREF
- J5 — CHAN 53 POWER SUPPLY CURRENT
- J6 — CHAN 54 POWER SUPPLY VOLTAGE
- J7 — CHAN 55 POWER SUPPLY ERROR

TO SHEET 47

MADC MUX A/D IO PANEL
BLDG #: 1008B
RACK #: R08B03
PANEL #: MADC A/D IO PANEL D
FR SHEET 47
- J8 — CHAN 40 POWER SUPPLY IREF
- J9 — CHAN 41 POWER SUPPLY CURRENT
- J10 — CHAN 42 POWER SUPPLY VOLTAGE
- J11 — CHAN 43 POWER SUPPLY ERROR

TO SHEET 47

MADC MUX A/D IO PANEL
BLDG #: 1008B
RACK #: R08B03
PANEL #: MADC A/D IO PANEL G
FR SHEET 47
- J12 — CHAN 44 POWER SUPPLY SETPOINT

TO SHEET 77

MADC MUX A/D IO PANEL
BLDG #: 1008B
RACK #: R08B04
PANEL #: MADC A/D IO PANEL D
FR SHEET 47
- J8 — CHAN 56 POWER SUPPLY IREF
- J9 — CHAN 57 POWER SUPPLY CURRENT
- J10 — CHAN 58 POWER SUPPLY VOLTAGE
- J11 — CHAN 59 POWER SUPPLY ERROR

TO SHEET 47

MADC MUX A/D IO PANEL
BLDG #: 1006B
RACK #: R08B03
PANEL #: MADC A/D IO PANEL D
FR SHEET 47
- J8 — CHAN 56 POWER SUPPLY IREF
- J9 — CHAN 57 POWER SUPPLY CURRENT
- J10 — CHAN 58 POWER SUPPLY VOLTAGE
- J11 — CHAN 59 POWER SUPPLY ERROR

TO SHEET 47

-3	-2	-1	REF DESIGNATOR	ITEM NO.	DESCRIPTION	MAT'L. DWG NO./BNL NO.
QTY REQD						

INTERPRET IN GENERAL ACCORDANCE WITH ASME Y14.24M-1989
UNLESS OTHERWISE SPECIFIED DIMENSIONS ARE IN INCHES
DECIMAL TOLERANCES
X ±.030
.XX ±.015
.XXX ±.005
ANGULAR TOLERANCE ± .5°
NA FINISH
BREAK SHARP EDGES
MAX. XX MIN. XX
OUTSTANDING ECN

Q.A. CATEGORY A-3

DRAWN BY	Venegas	7/8/03
CHECKED BY		
DESIGN APPROVAL		
ENGINEER APPROVAL		
SUPVR. APPROVAL		

NEXT ASSEMBLY

BROOKHAVEN NATIONAL LABORATORY
UPTON, N.Y. 11973

RHIC CONTROLS WIRING DIAGRAM
BLDG. 1008B
SPARE MADC CHANNELS

SIZE D — DRAWING NUMBER 94028559 — REV. A

MATERIAL: ——— SCALE: NA WEIGHT: — SHEET 47

1 *AUTOCAD

REV.	ZONE	ECN NO.	DATE	BY	CKR	APP.

Bill Venegas, BNL 6/30/2003 4:01 PM 8559_47.1.dwg

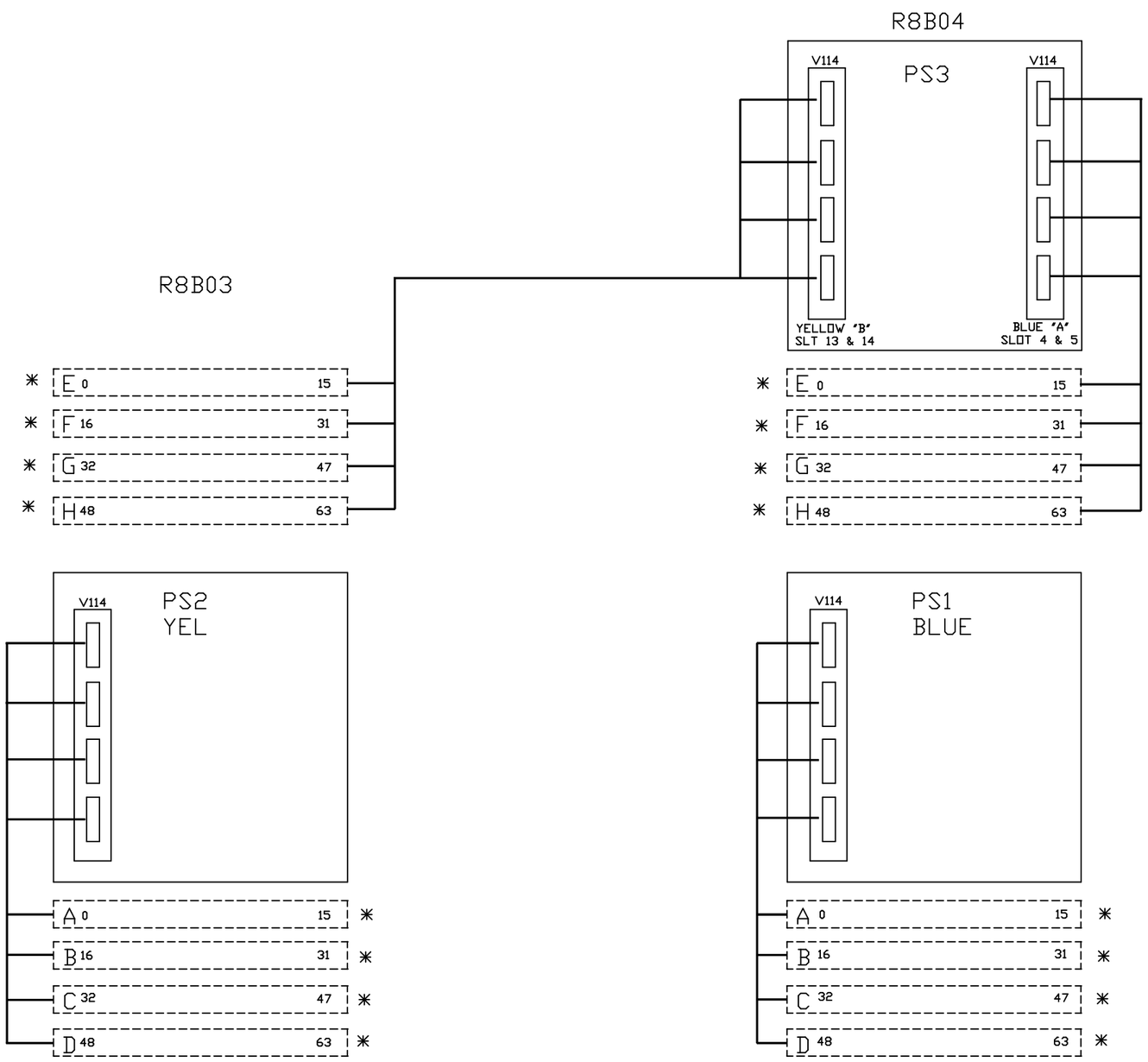

FRONT VIEW

* MOUNTED IN REAR

-3	-2	-1	REF DESIGNATOR	ITEM NO.	DESCRIPTION	MAT'L DWG NO./BNL NO.
QTY REQD						

INTERPRET IN GENERAL ACCORDANCE WITH ASME Y14.24M-1989

UNLESS OTHERWISE SPECIFIED DIMENSIONS ARE IN INCHES

DECIMAL TOLERANCES
.X ±.030
.XX ±.015
.XXX ±.005
ANGULAR TOLERANCE
± .5°

OUTSTANDING ECN

NA FINISH

BREAK SHARP EDGES
MAX. XX MIN. XX

Q.A. CATEGORY A-3		DATE
DRAWN BY	Venegas	6/30/03
CHECKED BY		
DESIGN APPROVAL		
ENGINEER APPROVAL		
SUPVR. APPROVAL		

NEXT ASSEMBLY

BROOKHAVEN NATIONAL LABORATORY
UPTON, N.Y. 11973

RHIC CONTROLS WIRING DIAGRAM
BLDG 1008B , R8B03 & R8B04
MADC PANEL LAYOUT

SIZE D | DRAWING NUMBER | REV. A

MATERIAL: ——— | SCALE: FULL | WEIGHT: – | SHEET 47.1

*AUTOCAD

REV.	ZONE	ECN NO.	DATE	BY	CKR	APP.

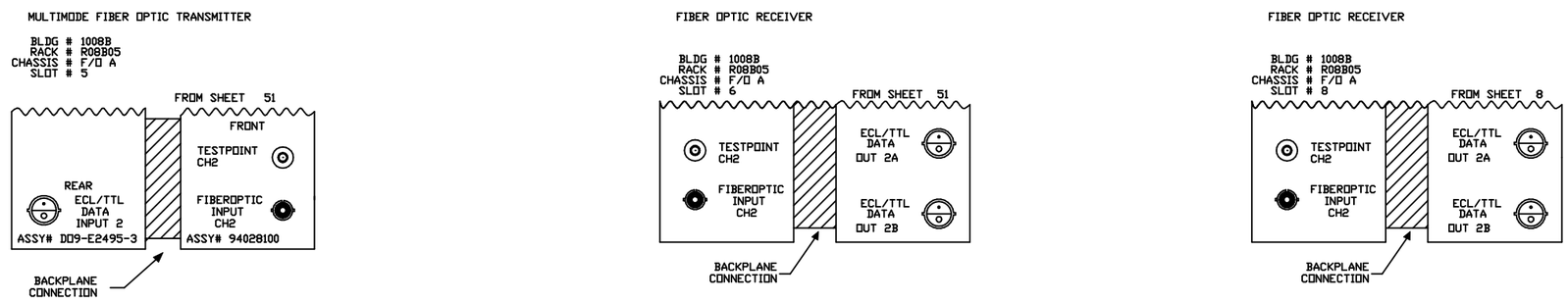

-3	-2	-1	REF DESIGNATOR	ITEM NO.	DESCRIPTION	MAT'L. DWG NO.,SPEC. NO.
QTY REQD						

INTERPRET IN GENERAL ACCORDANCE WITH ASME Y14.24M-1989

UNLESS OTHERWISE SPECIFIED DIMENSIONS ARE IN INCHES

DECIMAL TOLERANCES
.X ±.030
.XX ±.015
.XXX ±.005
ANGULAR TOLERANCE
± .5°

NA FINISH — BREAK SHARP EDGES MAX. XX MIN. XX

OUTSTANDING ECN

Q.A. CATEGORY A-3		DATE
DRAWN BY	Ed Koropsak	6/15/98
CHECKED BY		
DESIGN APPROVAL		
ENGINEER APPROVAL	R. MICHNOFF	6/15/98
SUPVR. APPROVAL		
NEXT ASSEMBLY		

BROOKHAVEN NATIONAL LABORATORY
UPTON, N.Y. 11973

RHIC CONTROLS WIRING DIAGRAM

SERVICE BLDG. 1008B

SPARE F/O RCVR/XMIT CHANNELS

SIZE D — DRAWING NUMBER 94028559 — REV. A

MATERIAL: ——— SCALE: NA WEIGHT: – SHEET 48 OF 52

*AUTOCAD

Bill Venegas, BNL 7/8/2003 2:44 PM 8559_49.dwg

REV.	ZONE	ECN NO.	DATE	BY	CKR	APP.

V102 DELAY MODULE
BLDG #: 1008B
RACK #: R08B03
CHASSIS ID: CFE-8B-PS2
SLOT #: 20
A16 BASE ADDRESS: E600

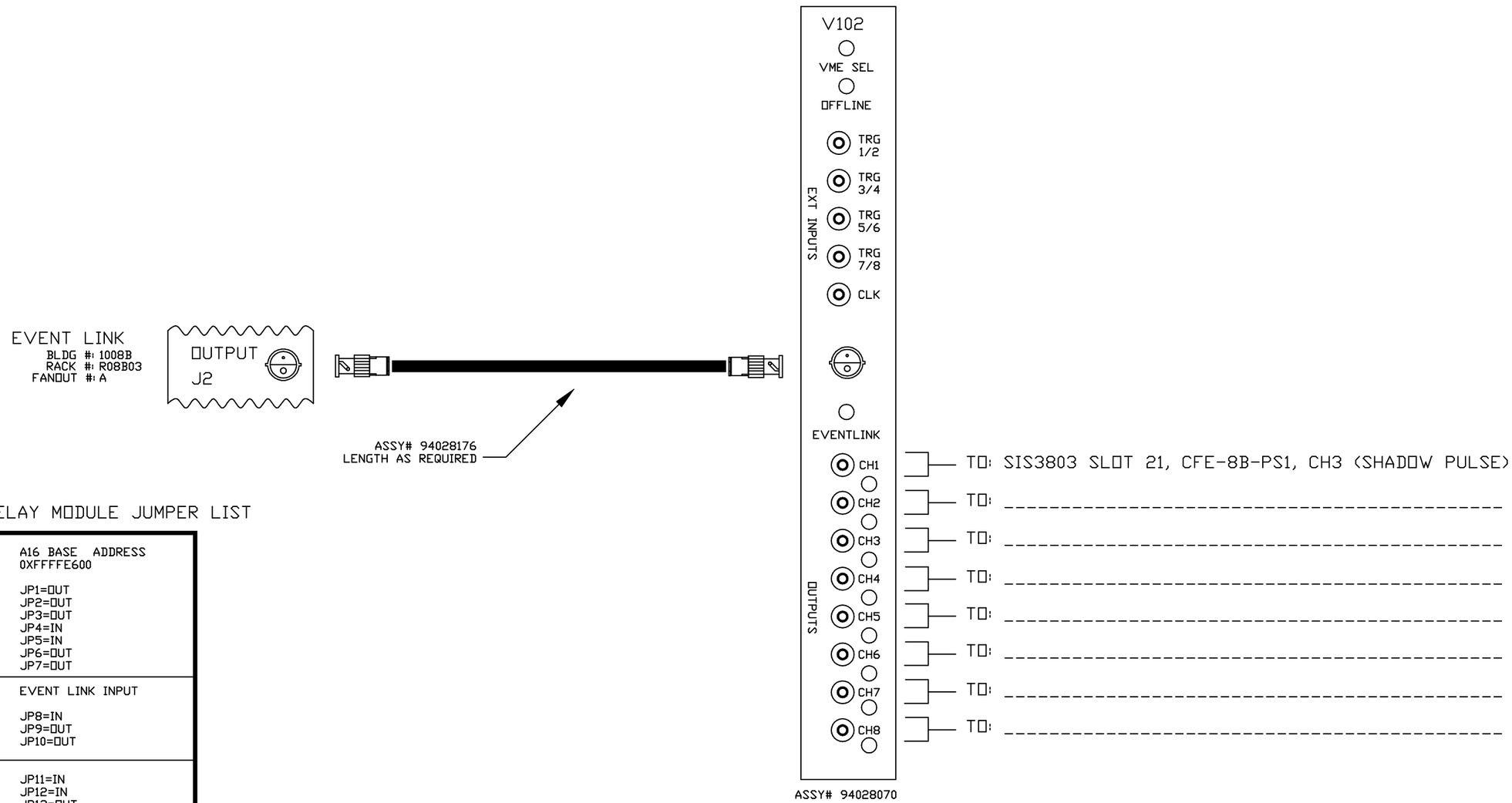

V102 DELAY MODULE JUMPER LIST

A16 BASE ADDRESS 0XFFFFE600 JP1=OUT JP2=OUT JP3=OUT JP4=IN JP5=IN JP6=OUT JP7=OUT
EVENT LINK INPUT JP8=IN JP9=OUT JP10=OUT
JP11=IN JP12=IN JP13=OUT JP14=IN

-3	-2	-1	REF DESIGNATOR	ITEM NO.	DESCRIPTION	MAT'L. DWG NO./BNL NO.
QTY REQD						

INTERPRET IN GENERAL ACCORDANCE WITH ASME Y14.24M-1989
UNLESS OTHERWISE SPECIFIED DIMENSIONS ARE IN INCHES
DECIMAL TOLERANCES .X ±.030 .XX ±.015 .XXX ±.005
ANGULAR TOLERANCE ± .5°
OUTSTANDING ECN
NA FINISH
BREAK SHARP EDGES MAX. XX MIN. XX

Q.A. CATEGORY A-3		DATE
DRAWN BY	Venegas	7/8/03
CHECKED BY		
DESIGN APPROVAL		
ENGINEER APPROVAL		
SUPVR. APPROVAL		
NEXT ASSEMBLY		

BROOKHAVEN NATIONAL LABORATORY
UPTON, N.Y. 11973
RHIC CONTROLS WIRING DIAGRAM
BLDG. 1008B CHASSIS CFE-8B-PS2
V102 DELAY MODULE

SIZE D | DRAWING NUMBER 94028559 | REV. A
MATERIAL: ——— | SCALE: NA | WEIGHT: – | SHEET 49

1 *AUTOCAD

REV.	ZONE	ECN NO.	DATE	BY	CKR	APP.

Bill Venegas, BNL 7/8/2003 3:07 PM 8559_50.dwg

DX Heater PS MADC Readbacks

MADC MUX A/D IO PANEL

BLDG #: 1008B
RACK #: R08B04
PANEL #: MADC A/D IO PANEL H

FR SHEET 50

- J1 — CHAN 49, POWER SUPPLY 1008B-7-1-A2, VOLTAGE, g7-dxh-hta
- J2 — CHAN 50, POWER SUPPLY 1008B-7-1-A2, CURRENT, g7-dxh-hta
- J3 — CHAN 51, POWER SUPPLY 1008B-7-1-A2, GND CURRENT, g7-dxh-hta

TO SHEET 50

MADC MUX A/D IO PANEL

BLDG #: 1008B
RACK #: R08B04
PANEL #: MADC A/D IO PANEL H

FR SHEET 50

- J7 — CHAN 55, POWER SUPPLY 1008B-8-1-A1, VOLTAGE, g8-dxh-hta
- J8 — CHAN 56, POWER SUPPLY 1008B-8-1-A1, CURRENT, g8-dxh-hta
- J9 — CHAN 57, POWER SUPPLY 1008B-8-1-A1, GND CURRENT, g8-dxh-hta

TO SHEET 50

MADC MUX A/D IO PANEL

BLDG #: 1008B
RACK #: R08B04
PANEL #: MADC A/D IO PANEL H

FR SHEET 50

- J4 — CHAN 52, POWER SUPPLY 1008B-7-2-B2, VOLTAGE, g7-dxh-htb
- J5 — CHAN 53, POWER SUPPLY 1008B-7-2-B2, CURRENT, g7-dxh-htb
- J6 — CHAN 54, POWER SUPPLY 1008B-7-2-B2, GND CURRENT, g7-dxh-htb

TO SHEET 50

MADC MUX A/D IO PANEL

BLDG #: 1008B
RACK #: R08B04
PANEL #: MADC A/D IO PANEL H

FR SHEET 50

- J10 — CHAN 58, POWER SUPPLY 1008B-8-2-B1, VOLTAGE, g8-dxh-htb
- J11 — CHAN 59, POWER SUPPLY 1008B-8-2-B1, CURRENT, g8-dxh-htb
- J12 — CHAN 60, POWER SUPPLY 1008B-8-2-B1, GND CURRENT, g8-dxh-htb

TO SHEET 50

BLDG #: 1008B RACK #: R08B04 PANEL MADC A/D IO PANEL G

FROM SH 47

- J11 — CHAN 43, PHENIX MMS V
- J12 — CHAN 44, PHENIX MMS I
- J13 — CHAN 45, PHENIX CMO V
- J13 — CHAN 46, PHENIX CMO I
- J14 — CHAN 47, PHENIX MMN V
- J0 — CHAN 48, PHENIX MMN I

BLDG #: 1008B
RACK #: R8B04
PANEL H

-3	-2	-1	QTY REQD	REF DESIGNATOR	ITEM NO.	DESCRIPTION	MAT'L. DWG NO.,SPEC. NO.

INTERPRET IN GENERAL ACCORDANCE WITH ASME Y14.24M-1989

UNLESS OTHERWISE SPECIFIED DIMENSIONS ARE IN INCHES

DECIMAL TOLERANCES .X ±.030 .XX ±.015 .XXX ±.005
ANGULAR TOLERANCE ± .5°

NA FINISH — BREAK SHARP EDGES — MAX. XX MIN. XX

OUTSTANDING ECN

Q.A. CATEGORY A-3		DATE
DRAWN BY	Ed Koropsak	6/15/98
CHECKED BY		
DESIGN APPROVAL		
ENGINEER APPROVAL	R. MICHNOFF	6/15/98
SUPVR. APPROVAL		
NEXT ASSEMBLY		

BROOKHAVEN NATIONAL LABORATORY
UPTON, N.Y. 11973

RHIC CONTROLS WIRING DIAGRAM
DX HEATER PS MADC READBACKS
PHENIX MADC READBACKS

SIZE D — DRAWING NUMBER 94028559 — REV. A

MATERIAL: ——— SCALE: NA WEIGHT: – SHEET 50

*AUTOCAD

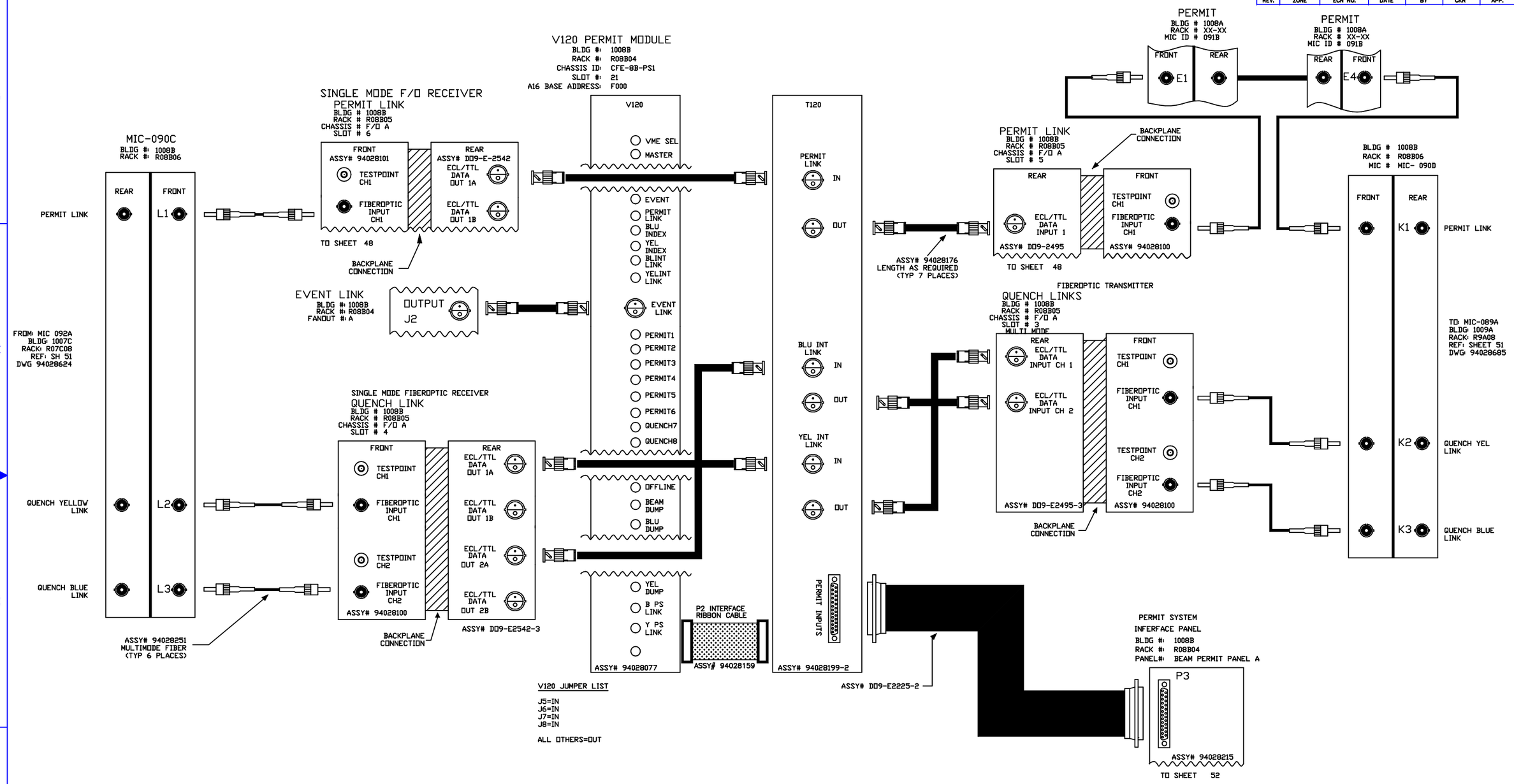

Controls 8/30/99 3:25 PM 8559_51.dwg

-3	-2	-1	REF DESIGNATOR	ITEM NO.	DESCRIPTION	MAT'L DWG NO./INL NO.
QTY REQD						

INTERPRET IN GENERAL ACCORDANCE WITH ASME Y14.24M-1989

UNLESS OTHERWISE SPECIFIED DIMENSIONS ARE IN INCHES

DECIMAL TOLERANCES
X ±.030
.XX ±.015
.XXX ±.005
ANGULAR TOLERANCE ± .5°

NA FINISH — BREAK SHARP EDGES — MAX. XX MIN. XX

OUTSTANDING ECN

Q.A. CATEGORY A-3		DATE
DRAWN BY	Ed Koropsak	6/15/98
CHECKED BY		
DESIGN APPROVAL		
ENGINEER APPROVAL	R. MICHNOFF	6/15/98
SUPVR. APPROVAL		

NEXT ASSEMBLY

BROOKHAVEN NATIONAL LABORATORY
UPTON, N.Y. 11973

RHIC CONTROLS WIRING DIAGRAM

SERVIVE BLDG. 1008B, CHASSIS CFE-8B-PS2

V120/T120 PERMIT SYSTEM

SIZE D — DRAWING NUMBER 94028559 — REV. A

MATERIAL: ——— SCALE: NA WEIGHT: – SHEET 51

1 *AUTOCAD

REV.	ZONE	ECN NO.	DATE	BY	CKR	APP.

CONTROLS- 1/2/02 1:31 PM 8559_52.dwg

PERMIT SYSTEM INTERFACE MODULE

BLDG #: 1008B
RACK #: R02B04
PANEL #: PERMIT I/F PANEL A

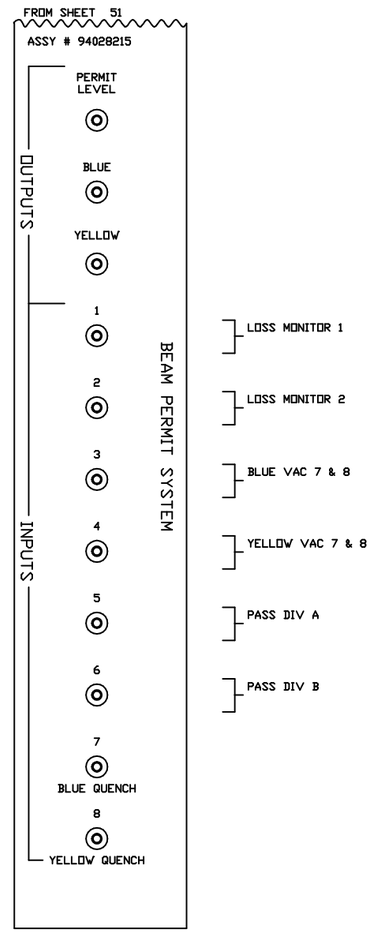

-3	-2	-1	REF DESIGNATOR	ITEM NO.	DESCRIPTION	MAT'L DWG NO./BNL NO.
QTY REQD						

INTERPRET IN GENERAL ACCORDANCE WITH ASME Y14.24M-1989

UNLESS OTHERWISE SPECIFIED DIMENSIONS ARE IN INCHES

DECIMAL TOLERANCES
.X ±.030
.XX ±.015
.XXX ±.005
ANGULAR TOLERANCE
± .5°

NA FINISH

BREAK SHARP EDGES
MAX. XX MIN. XX

OUTSTANDING ECN

Q.A. CATEGORY A-3		DATE
DRAWN BY	Ed Koropsak	6/15/98
CHECKED BY		
DESIGN APPROVAL		
ENGINEER APPROVAL	R. MICHNOFF	6/15/98
SUPVR. APPROVAL		

NEXT ASSEMBLY

BROOKHAVEN NATIONAL LABORATORY
UPTON, N.Y. 11973

RHIC CONTROLS WIRING DIAGRAM
BLDG. 1008B, RACK R08B04

PERMIT SYSTEM INTERFACE PANEL

SIZE D | DRAWING NUMBER 94028559 | REV. A

MATERIAL: ——— SCALE: NA WEIGHT: – SHEET 52 OF 52

*AUTOCAD

REV.	ZONE	ECN NO.	DATE	BY	CKR	APP.

RESET FANOUT MODULE
BLDG # 1008B
RACK # R08B17
FANOUT # C

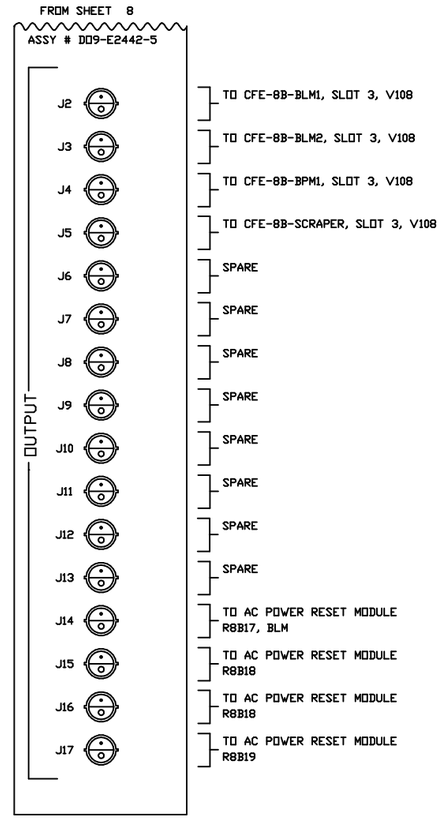

-3	-2	-1	REF DESIGNATOR	ITEM NO.	DESCRIPTION	MAT'L. DWG NO./INL NO.
QTY REQD						

INTERPRET IN GENERAL ACCORDANCE WITH ASME Y14.24M-1989

UNLESS OTHERWISE SPECIFIED DIMENSIONS ARE IN INCHES

DECIMAL TOLERANCES
.X ±.030
.XX ±.015
.XXX ±.005
ANGULAR TOLERANCE ± .5°

OUTSTANDING ECN

NA FINISH

BREAK SHARP EDGES MAX. XX MIN. XX

Q.A. CATEGORY A-3		DATE
DRAWN BY	Venegas	8/30/99
CHECKED BY		
DESIGN APPROVAL		
ENGINEER APPROVAL	R. MICHNOFF	6/5/98
SUPVR. APPROVAL		
NEXT ASSEMBLY		

BROOKHAVEN NATIONAL LABORATORY
UPTON, N.Y. 11973

RHIC CONTROLS WIRING DIAGRAM

1008B

RESET LINK

SIZE D

94028559 DRAWING NUMBER

REV. A

MATERIAL: ——— SCALE: NA WEIGHT: – SHEET 53

*AUTOCAD

Bill Venegas, BNL 6/30/2003 3:24 PM 8559_60.dwg

REV.	ZONE	ECN NO.	DATE	BY	CKR	APP.

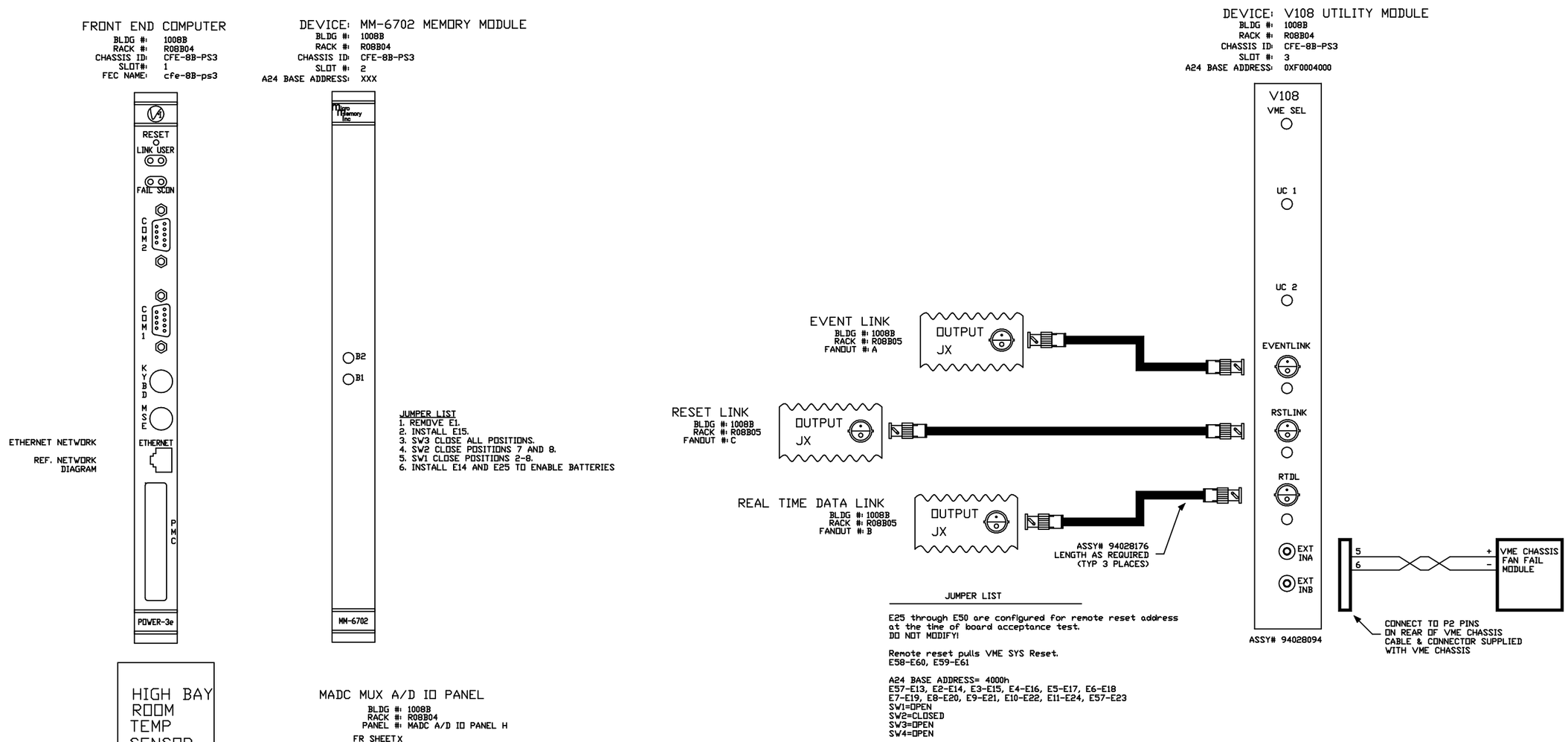

-3	-2	-1	REF DESIGNATOR	ITEM NO.	DESCRIPTION	MAT'L. DWG NO.,SHL NO.
QTY REQD						

INTERPRET IN GENERAL ACCORDANCE WITH ASME Y14.24M-1989

UNLESS OTHERWISE SPECIFIED DIMENSIONS ARE IN INCHES

DECIMAL TOLERANCES
.X ±.030
.XX ±.015
.XXX ±.005
ANGULAR TOLERANCE ± .5°

OUTSTANDING ECN

NA FINISH

BREAK SHARP EDGES MAX. XX MIN. XX

Q.A. CATEGORY A-3	DATE	
DRAWN BY Venegas	6/30/03	
CHECKED BY		
DESIGN APPROVAL		
ENGINEER APPROVAL		
SUPVR. APPROVAL		
NEXT ASSEMBLY		

BROOKHAVEN NATIONAL LABORATORY
UPTON, N.Y. 11973

RHIC CONTROLS WIRING DIAGRAM

SERV BLDG 1008B, VME CHASSIS CFE-8B-PS3

CPU/MEMORY /V108 UTIL MODULE

SIZE D | DRAWING NUMBER 94028559 | REV. A

MATERIAL: ——— SCALE: NA WEIGHT: – SHEET 60

*AUTOCAD

REV.	ZONE	ECN NO.	DATE	BY	CKR	APP.

Bill Venegas, BNL 7/8/2003 1:45 PM 8559_61.dwg

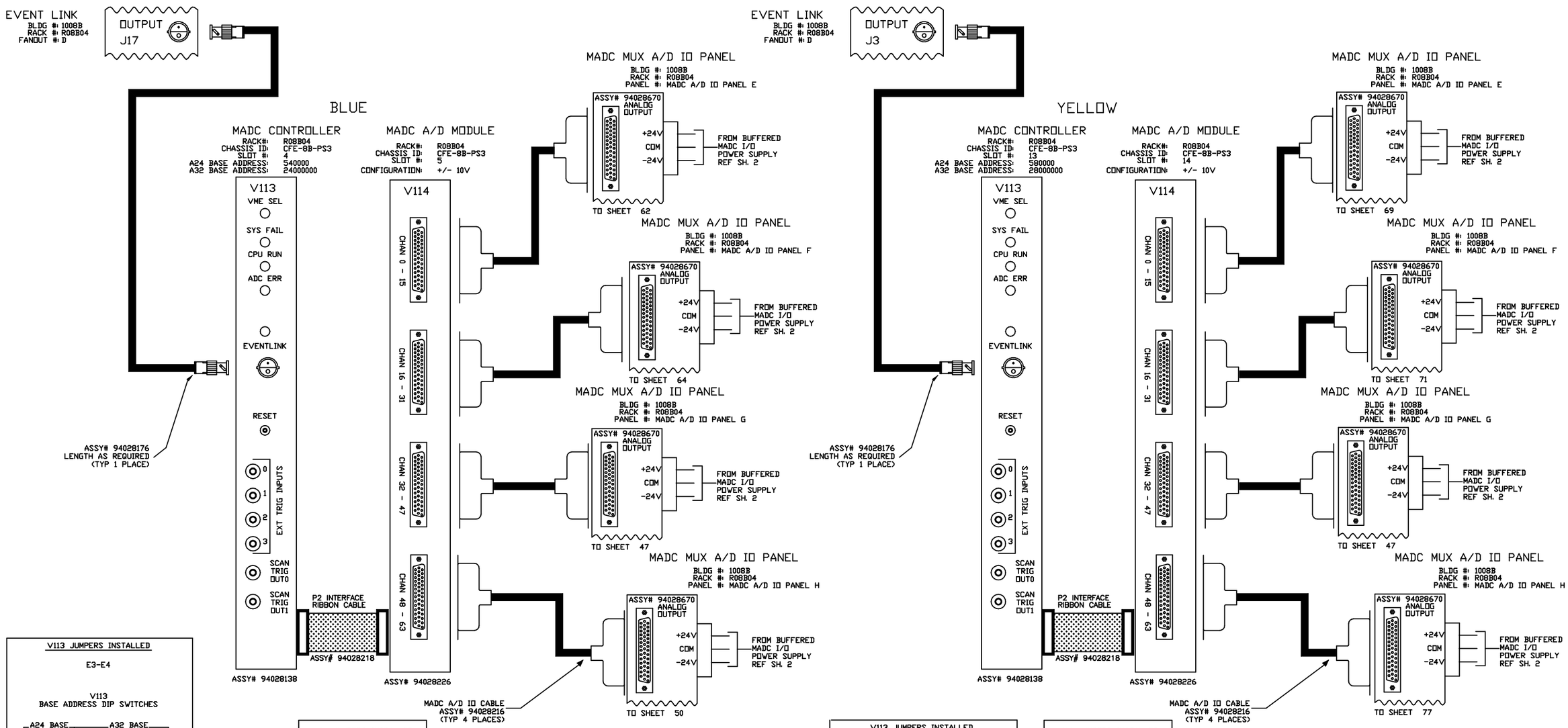

V113 JUMPERS INSTALLED

E3-E4

V113
BASE ADDRESS DIP SWITCHES

A24 BASE — A32 BASE

A18 A19 A20 A21 A22 A23 A22 A23 — A24 A25 A26 A27 A28 A29 A30 A31

SW1 SW2

PUSH SWITCH IN DIRECTION SHOWN

V114 JUMPERS INSTALLED

J1, J2, J4, J5, J9
J19, J15, J21

ALL OTHER JUMPERS OUT

V113 JUMPERS INSTALLED

E3-E4

V113
BASE ADDRESS DIP SWITCHES

A24 BASE — A32 BASE

A18 A19 A20 A21 A22 A23 A22 A23 — A24 A25 A26 A27 A28 A29 A30 A31

SW1 SW2

PUSH SWITCH IN DIRECTION SHOWN

V114 JUMPERS INSTALLED

J1, J2, J4, J5, J9
J19, J15, J21

ALL OTHER JUMPERS OUT

-3	-2	-1	REF DESIGNATOR	ITEM NO.	DESCRIPTION	MAT'L DWG NO./SHL NO.
QTY REQD						

INTERPRET IN GENERAL ACCORDANCE WITH ASME Y14.24M-1989

UNLESS OTHERWISE SPECIFIED DIMENSIONS ARE IN INCHES

DECIMAL TOLERANCES
.X ±.030
.XX ±.015
.XXX ±.005
ANGULAR TOLERANCE
± .5°

OUTSTANDING ECN

NA FINISH

BREAK SHARP EDGES
MAX. XX MIN. XX

Q.A. CATEGORY	A-3	DATE
DRAWN BY	Venegas	6/30/03
CHECKED BY		
DESIGN APPROVAL		
ENGINEER APPROVAL		
SUPVR. APPROVAL		

NEXT ASSEMBLY

BROOKHAVEN NATIONAL LABORATORY
UPTON, N.Y. 11973

RHIC CONTROLS WIRING DIAGRAM
1008B, VME CHASSIS CFE-8B-PS3
MADC SYSTEM

SIZE D — DRAWING NUMBER 94028559 — REV. A

MATERIAL: ——— SCALE: FULL WEIGHT: – SHEET 61

*AUTOCAD

REV.	ZONE	ECN NO.	DATE	BY	CKR	APP.

Bill Venegas, BNL 7/7/2003 4:14 PM 8559_62.dwg

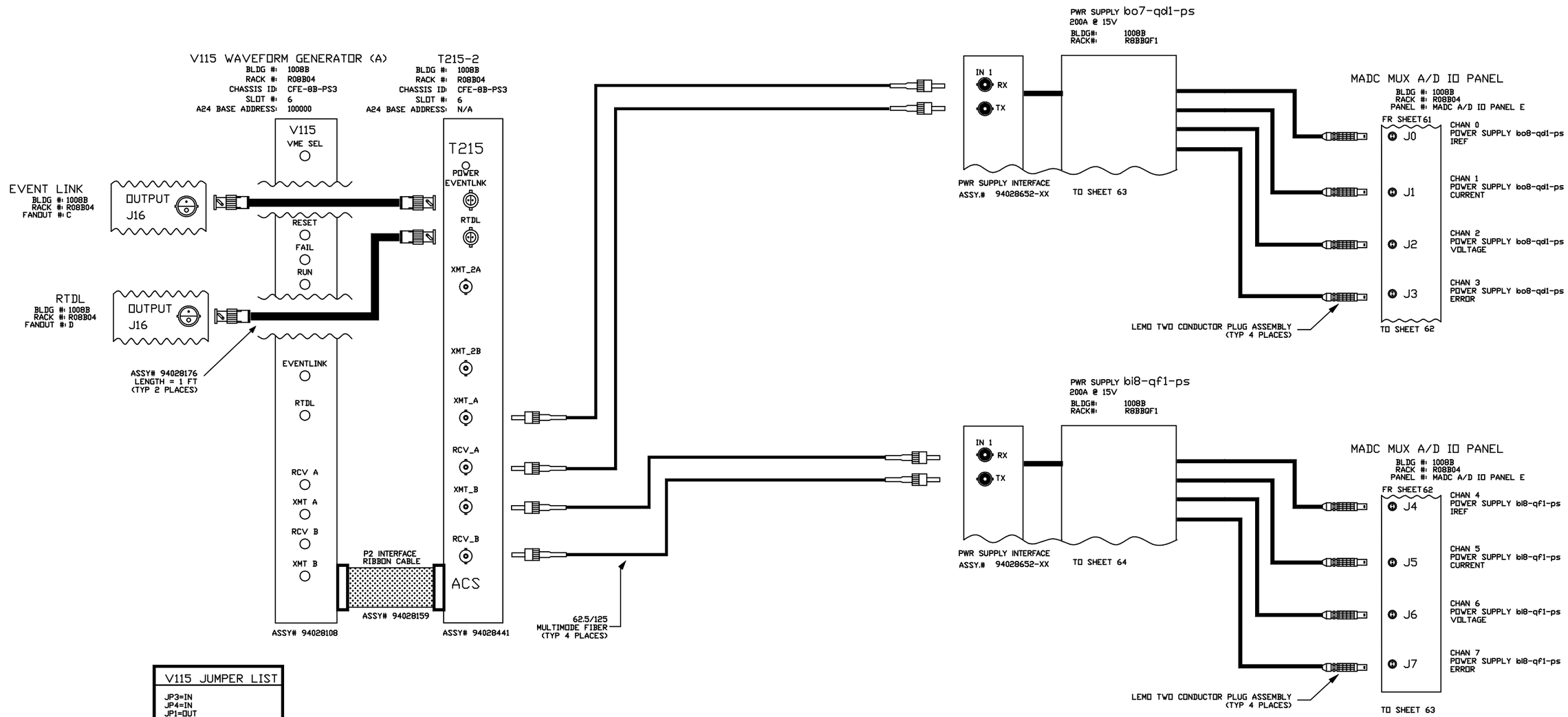

V115 JUMPER LIST
JP3=IN JP4=IN JP1=OUT JP2=OUT
A24 BASE ADDRESS JB1-A23=IN JB1-A22=IN JB1-A21=IN JB1-A20=OUT JB1-A19=IN JB1-A18=IN

-3	-2	-1	REF DESIGNATOR	ITEM NO.	DESCRIPTION	MAT'L DWG NO./BNL NO.
QTY REQD						

INTERPRET IN GENERAL ACCORDANCE WITH ASME Y14.24M-1989

UNLESS OTHERWISE SPECIFIED DIMENSIONS ARE IN INCHES

DECIMAL TOLERANCES
.X ±.030
.XX ±.015
.XXX ±.005
ANGULAR TOLERANCE
± .5°

FINISH: NA

BREAK SHARP EDGES
MAX. XX MIN. XX

OUTSTANDING ECN

Q.A. CATEGORY A-3

		DATE
DRAWN BY	Venegas	7/7/03
CHECKED BY		
DESIGN APPROVAL		
ENGINEER APPROVAL		
SUPVR. APPROVAL		

NEXT ASSEMBLY

BROOKHAVEN NATIONAL LABORATORY
UPTON, N.Y. 11973

RHIC CONTROLS WIRING DIAGRAM
BLDG. 1008B, CFE-8B-PS3
bo8-qd1-ps/bi8-qf1-ps

SIZE D | DRAWING NUMBER 94028559 | REV. A

MATERIAL: ——— SCALE: NA WEIGHT: – SHEET 62

1 *AUTOCAD

REV.	ZONE	ECN NO.	DATE	BY	CKR	APP.

Bill Venegas, BNL 7/8/2003 8:54 AM 8559_63.dwg

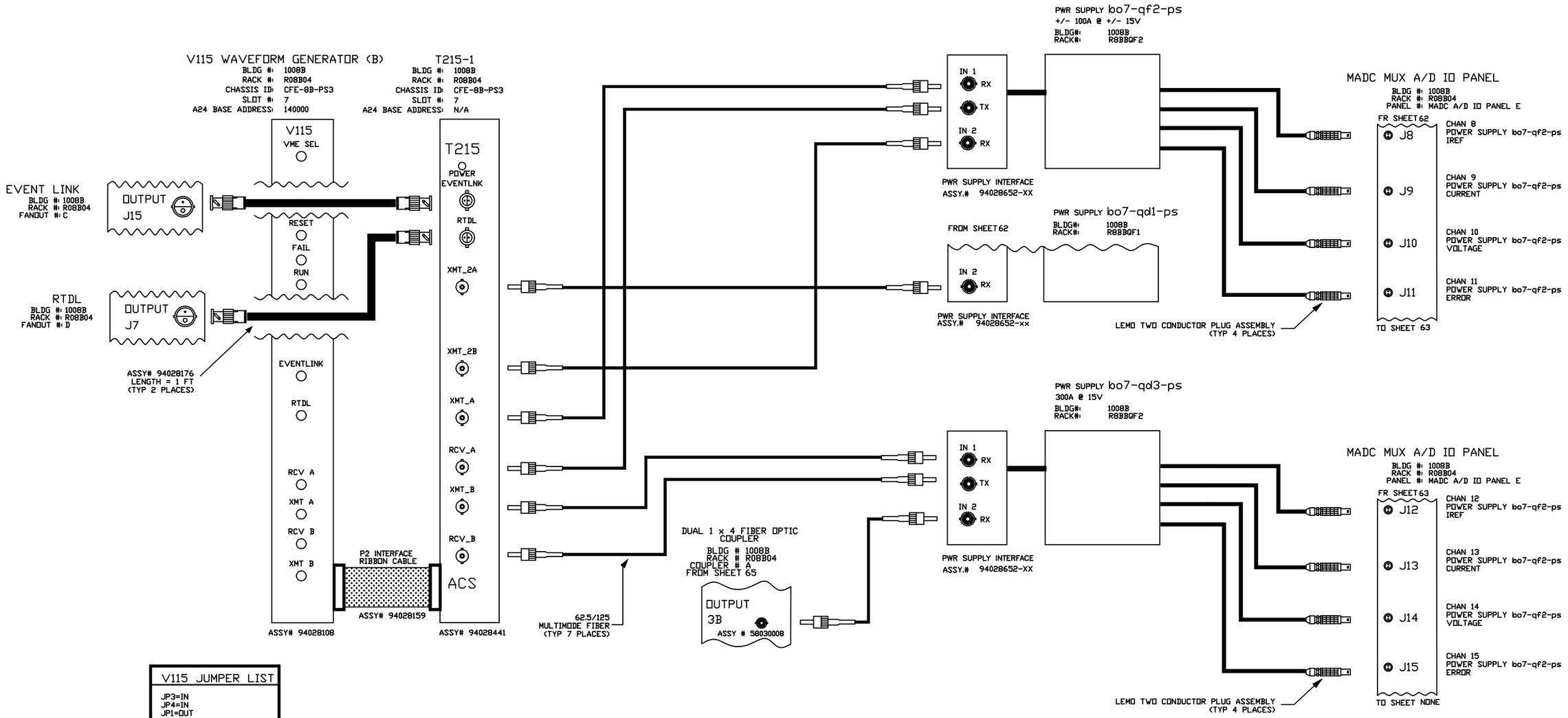

V115 JUMPER LIST
JP3=IN JP4=IN JP1=OUT JP2=OUT
A24 BASE ADDRESS JB1-A23=IN JB1-A22=IN JB1-A21=IN JB1-A20=OUT JB1-A19=IN JB1-A18=OUT

-3	-2	-1	REF DESIGNATOR	ITEM NO.	DESCRIPTION	MAT'L DWG NO.,BNL NO.
QTY REQD						

INTERPRET IN GENERAL ACCORDANCE WITH ASME Y14.24M-1989

UNLESS OTHERWISE SPECIFIED DIMENSIONS ARE IN INCHES

DECIMAL TOLERANCES
.X ±.030
.XX ±.015
.XXX ±.005
ANGULAR TOLERANCE
± .5°

NA FINISH

BREAK SHARP EDGES
MAX. XX MIN. XX

OUTSTANDING ECN

Q.A. CATEGORY A-3

		DATE
DRAWN BY	Venegas	7/8/03
CHECKED BY		
DESIGN APPROVAL		
ENGINEER APPROVAL		
SUPVR. APPROVAL		

NEXT ASSEMBLY

BROOKHAVEN NATIONAL LABORATORY
UPTON, N.Y. 11973

RHIC CONTROLS WIRING DIAGRAM

BLDG. 1008B, CFE-8B-PS3

bo7-qf2-ps/bo7-qd3-ps

SIZE D | DRAWING NUMBER 94028559 | REV. A

MATERIAL: ——— SCALE: NA WEIGHT: – SHEET 63

*AUTOCAD

REV.	ZONE	ECN NO.	DATE	BY	CKR	APP.

Bill Venegas, BNL 7/8/2003 9:08 AM 8559_64.dwg

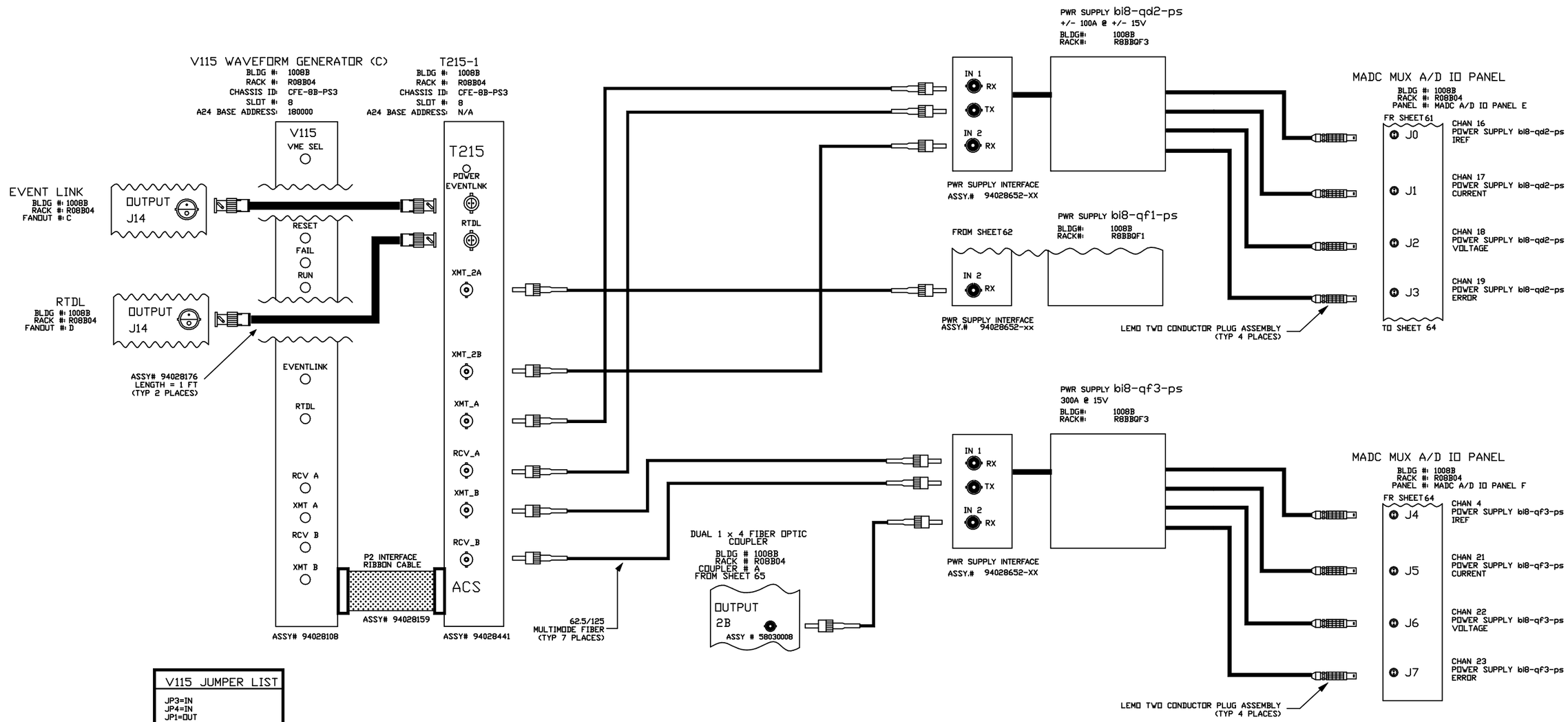

V115 JUMPER LIST
JP3=IN JP4=IN JP1=OUT JP2=OUT
A24 BASE ADDRESS JB1-A23=IN JB1-A22=IN JB1-A21=IN JB1-A20=OUT JB1-A19=OUT JB1-A18=IN

-3	-2	-1	REF DESIGNATOR	ITEM NO.	DESCRIPTION	MAT'L DWG NO./BNL NO.
QTY REQD						

INTERPRET IN GENERAL ACCORDANCE WITH ASME Y14.24M-1989

UNLESS OTHERWISE SPECIFIED DIMENSIONS ARE IN INCHES
DECIMAL TOLERANCES
.X ±.030
.XX ±.015
.XXX ±.005
ANGULAR TOLERANCE
± .5°

OUTSTANDING ECN

NA FINISH

BREAK SHARP EDGES
MAX. XX MIN. XX

Q.A. CATEGORY A-3		DATE
DRAWN BY	Venegas	7/8/03
CHECKED BY		
DESIGN APPROVAL		
ENGINEER APPROVAL		
SUPVR. APPROVAL		
NEXT ASSEMBLY		

BROOKHAVEN NATIONAL LABORATORY
UPTON, N.Y. 11973

RHIC CONTROLS WIRING DIAGRAM
BLDG. 1008B, CFE-8B-PS3
bi8-qd2-ps/bi8-qf3-ps

SIZE D
DRAWING NUMBER 94028559
REV. A

MATERIAL: ——— SCALE: NA WEIGHT: – SHEET 64

*AUTOCAD

REV.	ZONE	ECN NO.	DATE	BY	CKR	APP.

Bill Venegas, BNL 7/1/2003 10:18 AM 8559_65.dwg

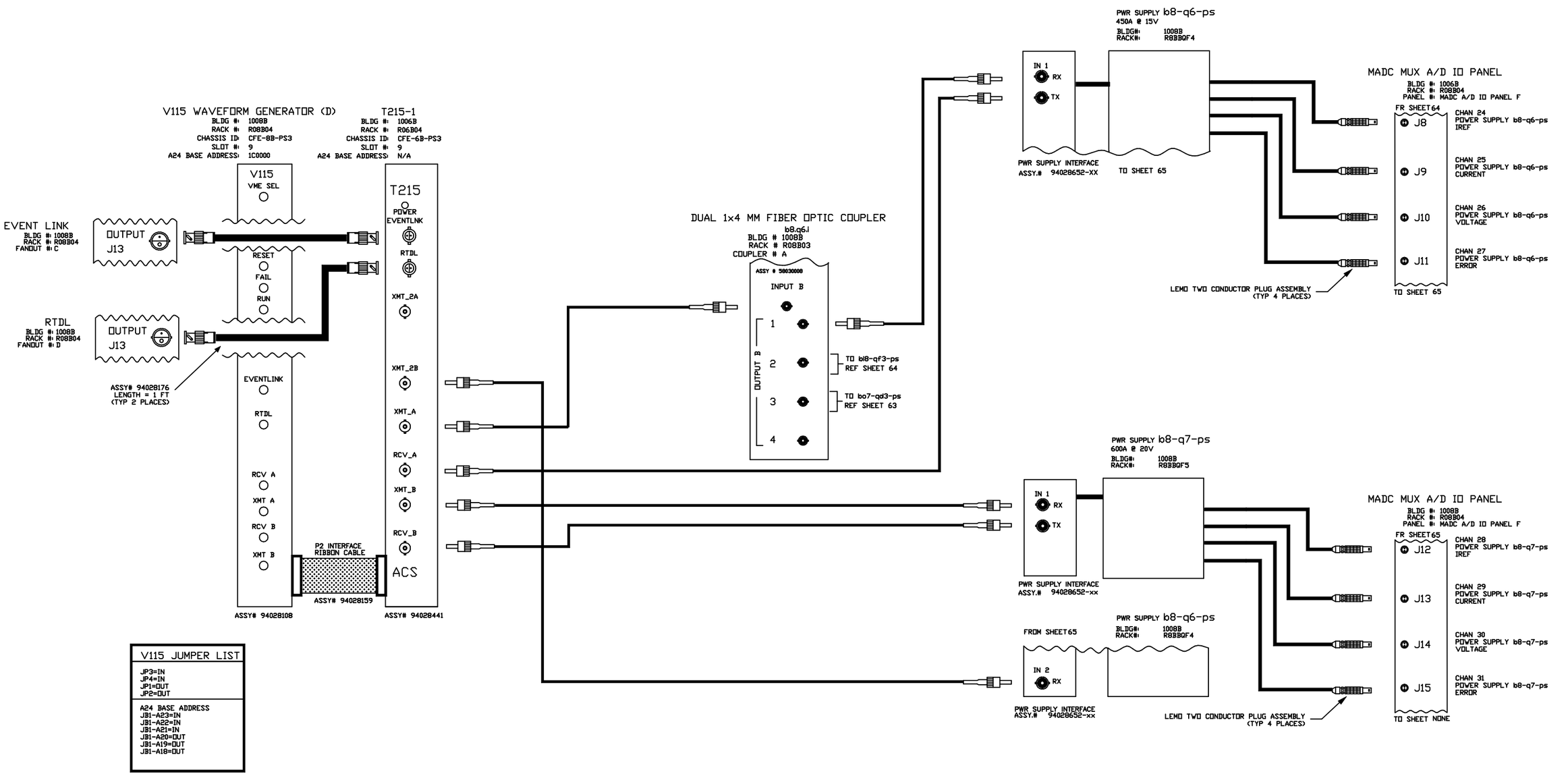

V115 JUMPER LIST
JP3=IN JP4=IN JP1=OUT JP2=OUT
A24 BASE ADDRESS JB1-A23=IN JB1-A22=IN JB1-A21=IN JB1-A20=OUT JB1-A19=OUT JB1-A18=OUT

-3	-2	-1	REF DESIGNATOR	ITEM NO.	DESCRIPTION	MATL DWG NO./BNL NO.
QTY REQD						

INTERPRET IN GENERAL ACCORDANCE WITH ASME Y14.24M-1989

UNLESS OTHERWISE SPECIFIED DIMENSIONS ARE IN INCHES

DECIMAL TOLERANCES
.X ±.030
.XX ±.015
.XXX ±.005
ANGULAR TOLERANCE
± .5°

NA FINISH

BREAK SHARP EDGES
MAX. XX MIN. XX

OUTSTANDING ECN

Q.A. CATEGORY A-3

		DATE
DRAWN BY	Venegas	7/1/03
CHECKED BY		
DESIGN APPROVAL		
ENGINEER APPROVAL		
SUPVR. APPROVAL		

NEXT ASSEMBLY

BROOKHAVEN NATIONAL LABORATORY
UPTON, N.Y. 11973

RHIC CONTROLS WIRING DIAGRAM
BLDG. 1008B, CFE-8B-PS3
b8-q6-ps/b8-q7-ps

SIZE D
DRAWING NUMBER 94028549
REV. A

MATERIAL: ——— SCALE: NA WEIGHT: – SHEET 65

*AUTOCAD

REV.	ZONE	ECN NO.	DATE	BY	CKR	APP.

Bill Venegas, BNL 7/8/2003 11:25 AM 8559_69.dwg

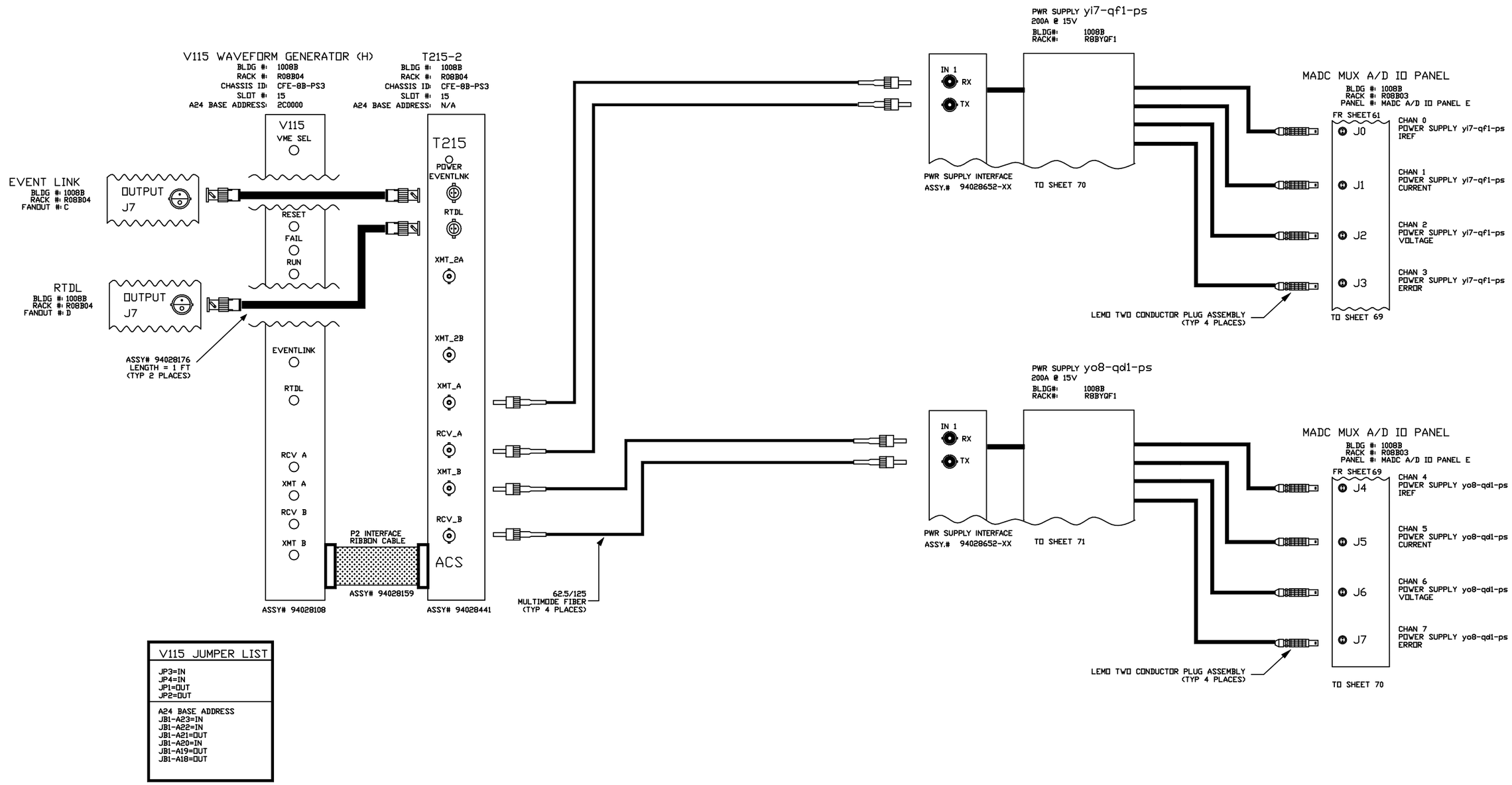

V115 JUMPER LIST
JP3=IN JP4=IN JP1=OUT JP2=OUT
A24 BASE ADDRESS JB1-A23=IN JB1-A22=IN JB1-A21=OUT JB1-A20=IN JB1-A19=OUT JB1-A18=OUT

-3	-2	-1	REF DESIGNATOR	ITEM NO.	DESCRIPTION	MAT'L DWG NO./BNL NO.
QTY REQD						

INTERPRET IN GENERAL ACCORDANCE WITH ASME Y14.24M-1989

UNLESS OTHERWISE SPECIFIED DIMENSIONS ARE IN INCHES

DECIMAL TOLERANCES
.X ±.030
.XX ±.015
.XXX ±.005
ANGULAR TOLERANCE
± .5°

NA FINISH

BREAK SHARP EDGES
MAX. XX MIN. XX

OUTSTANDING ECN

Q.A. CATEGORY A-3		DATE
DRAWN BY	Venegas	7/8/03
CHECKED BY		
DESIGN APPROVAL		
ENGINEER APPROVAL		
SUPVR. APPROVAL		

NEXT ASSEMBLY

BROOKHAVEN NATIONAL LABORATORY
UPTON, N.Y. 11973

RHIC CONTROLS WIRING DIAGRAM
BLDG. 1008B, CFE-8B-PS3
yi7-qf1-ps/yo8-qd1-ps

SIZE D | 94028559 | REV. A
DRAWING NUMBER

MATERIAL: ——— SCALE: NA WEIGHT: – SHEET 69

1 *AUTOCAD

REV.	ZONE	ECN NO.	DATE	BY	CKR	APP.

Bill Venegas, BNL 7/8/2003 11:45 AM 8559_70.dwg

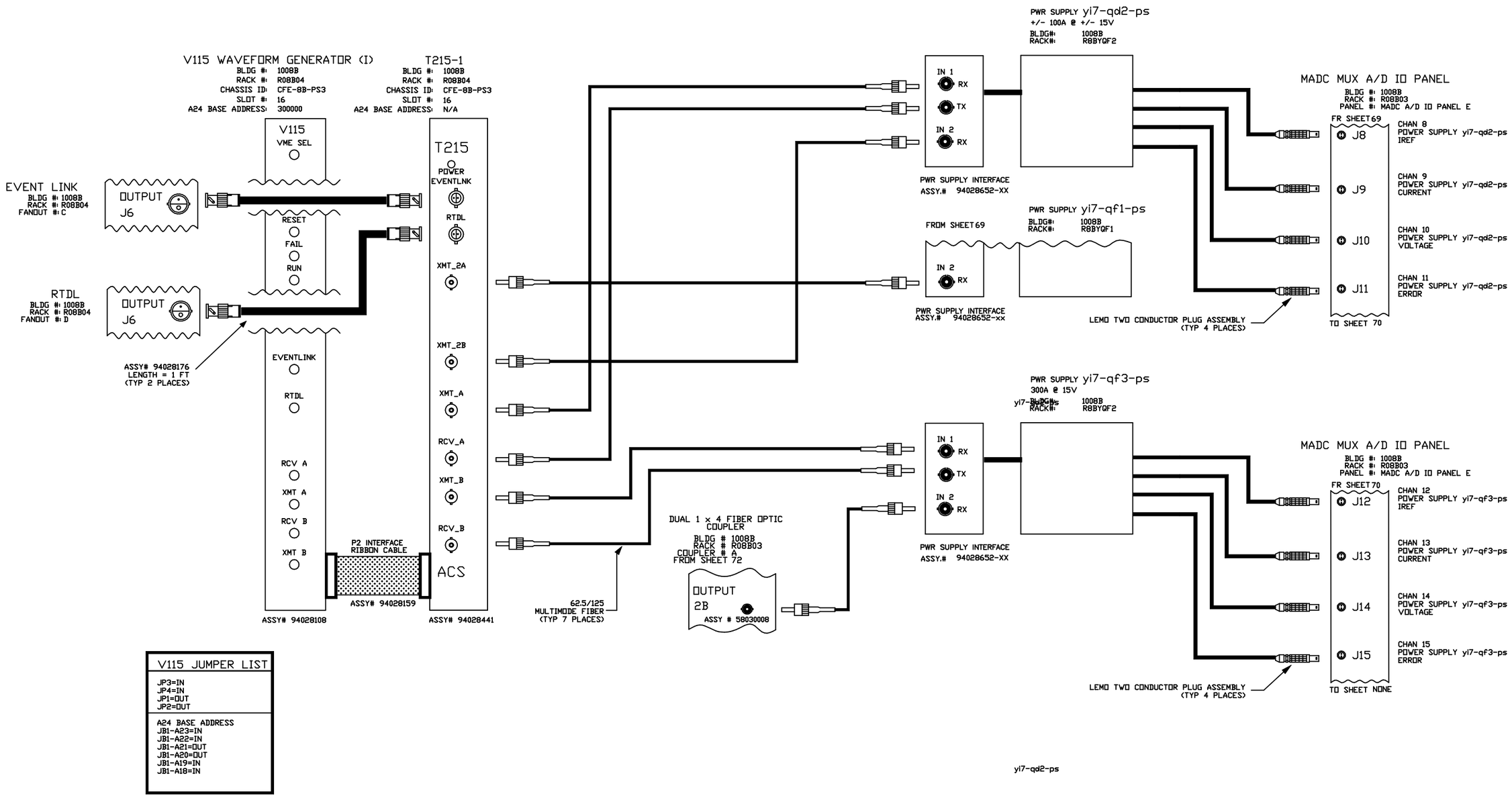

V115 JUMPER LIST
JP3=IN JP4=IN JP1=OUT JP2=OUT
A24 BASE ADDRESS JB1-A23=IN JB1-A22=IN JB1-A21=OUT JB1-A20=OUT JB1-A19=IN JB1-A18=IN

-3	-2	-1	REF DESIGNATOR	ITEM NO.	DESCRIPTION	MAT'L DWG NO./BNL NO.
QTY REQD						

INTERPRET IN GENERAL ACCORDANCE WITH ASME Y14.24M-1989

UNLESS OTHERWISE SPECIFIED DIMENSIONS ARE IN INCHES

DECIMAL TOLERANCES
.X ±.030
.XX ±.015
.XXX ±.005
ANGULAR TOLERANCE
± .5°

NA FINISH

BREAK SHARP EDGES
MAX. XX MIN. XX

OUTSTANDING ECN

Q.A. CATEGORY A-3

		DATE
DRAWN BY	Venegas	7/8/03
CHECKED BY		
DESIGN APPROVAL		
ENGINEER APPROVAL		
SUPVR. APPROVAL		

NEXT ASSEMBLY

BROOKHAVEN NATIONAL LABORATORY
UPTON, N.Y. 11973

RHIC CONTROLS WIRING DIAGRAM
BLDG. 1008B, CFE-8B-PS3
yi7-qd2-ps/yi7-qf3-ps

SIZE D
DRAWING NUMBER 94028559
REV. A

MATERIAL: ——— SCALE: NA WEIGHT: – SHEET 70

*AUTOCAD

REV.	ZONE	ECN NO.	DATE	BY	CKR	APP.

Bill Venegas, BNL 7/8/2003 1:11 PM 8559_71.dwg

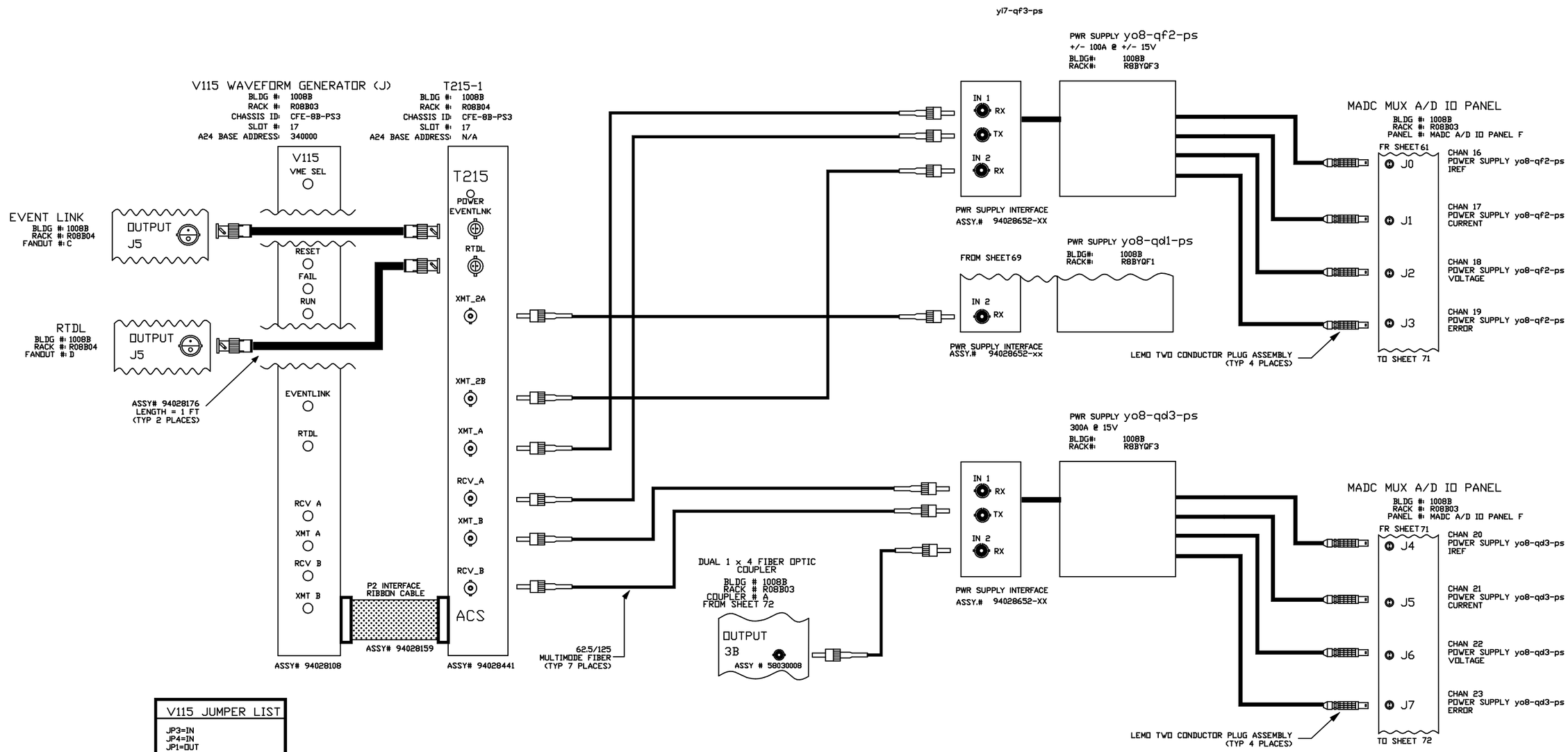

V115 JUMPER LIST
JP3=IN JP4=IN JP1=OUT JP2=OUT
A24 BASE ADDRESS JB1-A23=IN JB1-A22=IN JB1-A21=OUT JB1-A20=OUT JB1-A19=IN JB1-A18=OUT

-3	-2	-1	REF DESIGNATOR	ITEM NO.	DESCRIPTION	MAT'L DWG NO.,BNL NO.
QTY REQD						

INTERPRET IN GENERAL ACCORDANCE WITH ASME Y14.24M-1989

UNLESS OTHERWISE SPECIFIED DIMENSIONS ARE IN INCHES

DECIMAL TOLERANCES
.X ±.030
.XX ±.015
.XXX ±.005
ANGULAR TOLERANCE
± .5°

NA FINISH

BREAK SHARP EDGES
MAX. XX MIN. XX

OUTSTANDING ECN

Q.A. CATEGORY A-3

		DATE
DRAWN BY	Venegas	7/8/03
CHECKED BY		
DESIGN APPROVAL		
ENGINEER APPROVAL		
SUPVR. APPROVAL		

NEXT ASSEMBLY

BROOKHAVEN NATIONAL LABORATORY
UPTON, N.Y. 11973

RHIC CONTROLS WIRING DIAGRAM
BLDG. 1008B, CFE-8B-PS3
yo8-qf2-ps/yo8-qd3-ps

SIZE D
DRAWING NUMBER 94028559
REV. A

MATERIAL: ——— SCALE: NA WEIGHT: – SHEET 71

1 *AUTOCAD

REV.	ZONE	ECN NO.	DATE	BY	CKR	APP.

Bill Venegas, BNL 7/8/2003 11:50 AM 8559_72.dwg

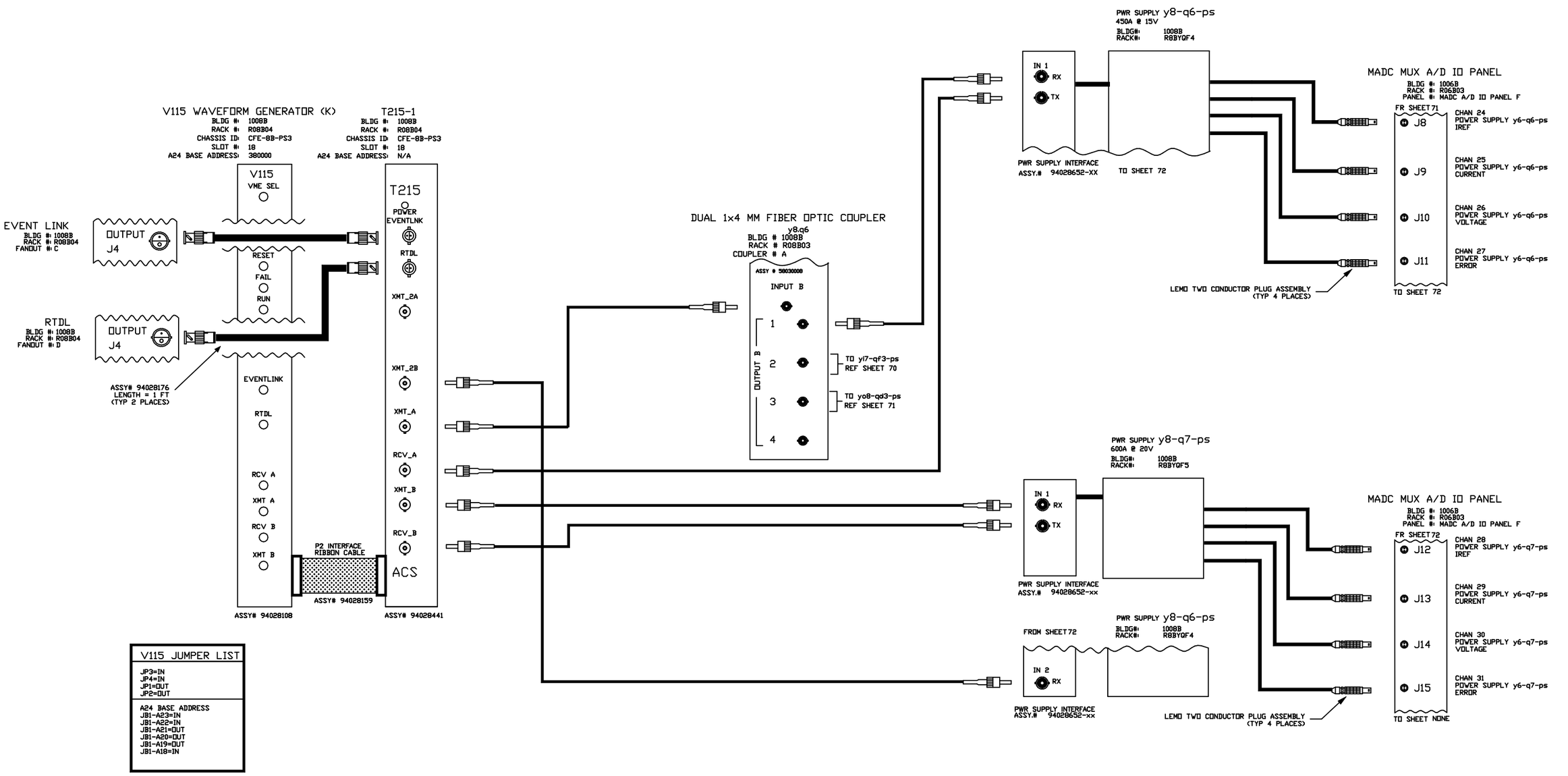

V115 JUMPER LIST
JP3=IN JP4=IN JP1=OUT JP2=OUT
A24 BASE ADDRESS JB1-A23=IN JB1-A22=IN JB1-A21=OUT JB1-A20=OUT JB1-A19=OUT JB1-A18=IN

-3	-2	-1	REF DESIGNATOR	ITEM NO.	DESCRIPTION	MAT'L DWG NO./BNL NO.
QTY REQD						

INTERPRET IN GENERAL ACCORDANCE WITH ASME Y14.24M-1989

UNLESS OTHERWISE SPECIFIED DIMENSIONS ARE IN INCHES

DECIMAL TOLERANCES
.X ±.030
.XX ±.015
.XXX ±.005
ANGULAR TOLERANCE
± .5°

NA FINISH

BREAK SHARP EDGES
MAX. XX MIN. XX

OUTSTANDING ECN

Q.A. CATEGORY A-3

		DATE
DRAWN BY	Venegas	6/16/03
CHECKED BY		
DESIGN APPROVAL		
ENGINEER APPROVAL		
SUPVR. APPROVAL		

NEXT ASSEMBLY

BROOKHAVEN NATIONAL LABORATORY
UPTON, N.Y. 11973

RHIC CONTROLS WIRING DIAGRAM
BLDG. 1006B, CFE-6B-PS3
y6-q7-ps/y6-q6-ps

SIZE D
DRAWING NUMBER 94028549
REV. A

MATERIAL: ——— SCALE: NA WEIGHT: – SHEET 72

*AUTOCAD

Bill Venegas, BNL 7/8/2003 3:42 PM 8559_77.dwg

MADC MUX A/D IO PANEL

BLDG #: 1008B
RACK #: R8B03
PANEL #: G

FR SHEET 47

J13	G7-CC-PWX CH 45 REF:
J14	G7-CC-PW1 CH 46 REF:
J15	YI5-CC-PW3.2 CH 47 REF:

MADC MUX A/D IO PANEL

BLDG #: 1008B
RACK #: R8B03
PANEL #: H

FR SHEET 61

J0	B07-CC-PW3.2 CH 48 REF:
J1	G8-CC-PWX CH 49 REF:
J2	G8-CC-PW1 CH 50 REF:
J3	Y08-CC-PW3.2 CH 51 REF:
J4	BI8-CC-PW3.2 CH 52 REF:

TO SHEET 47

-3	-2	-1	REF DESIGNATOR	ITEM NO.	DESCRIPTION	MAT'L. DWG NO.,BNL NO.
QTY REQD						

INTERPRET IN GENERAL ACCORDANCE WITH ASME Y14.24M-1989

UNLESS OTHERWISE SPECIFIED DIMENSIONS ARE IN INCHES

DECIMAL TOLERANCES
.X ±.030
.XX ±.015
.XXX ±.005
ANGULAR TOLERANCE
± .5°

NA FINISH

BREAK SHARP EDGES
MAX. XX MIN. XX

OUTSTANDING ECN

Q.A. CATEGORY A-3		DATE
DRAWN BY	Venegas	7/8/03
CHECKED BY		
DESIGN APPROVAL		
ENGINEER APPROVAL		
SUPVR. APPROVAL		
NEXT ASSEMBLY		

BROOKHAVEN NATIONAL LABORATORY
UPTON, N.Y. 11973

RHIC CONTROLS WIRING DRAWING

1008B, VME CHASSIS CFE-8B-PS3

VACUUM MADC I/O PANELS G & H

SIZE D | DRAWING NUMBER 94028559 | REV. A

MATERIAL: ——— SCALE: FULL WEIGHT: – SHEET 77

*AUTOCAD

Bill Venegas, BNL 7/8/2003 3:39 PM 8559_78.dwg

MADC MUX A/D IO PANEL

BLDG #: 1008B
RACK #: R8B03
PANEL #: MADC A/D IO PANEL H "YELLOW"

FR SHEET 60

J13 — CHAN 61
208V LINE VOLTAGE MONITOR
VOLTAGE

J14 — CHAN 62
208V LINE VOLTAGE MONITOR
VOTAGE

J15 — CHAN 63
208V LINE VOLTAGE MONITOR
VOLTAGE

TO SHEET NONE

MADC MUX A/D IO PANEL

BLDG #: 1008B
RACK #: R8B04
PANEL #: MADC A/D IO PANEL H "BLUE"

FR SHEET 50

J13 — CHAN 61
208V LINE VOLTAGE MONITOR
VOLTAGE

J14 — CHAN 62
208V LINE VOLTAGE MONITOR
VOTAGE

J15 — CHAN 63
208V LINE VOLTAGE MONITOR
VOLTAGE

TO SHEET NONE

-3	-2	-1	REF DESIGNATOR	ITEM NO.	DESCRIPTION	MAT'L. DWG NO.,BNL NO.
QTY REQD						

INTERPRET IN GENERAL ACCORDANCE WITH ASME Y14.24M-1989
UNLESS OTHERWISE SPECIFIED DIMENSIONS ARE IN INCHES
DECIMAL TOLERANCES .X ±.030 .XX ±.015 .XXX ±.005
ANGULAR TOLERANCE ± .5°
NA FINISH
BREAK SHARP EDGES MAX. XX MIN. XX
OUTSTANDING ECN

Q.A. CATEGORY A-3
DRAWN BY Venegas DATE 7/8/03
CHECKED BY
DESIGN APPROVAL
ENGINEER APPROVAL
SUPVR. APPROVAL
NEXT ASSEMBLY

BROOKHAVEN NATIONAL LABORATORY
UPTON, N.Y. 11973
RHIC CONTROLS WIRING DIAGRAM
BLDG. 1008B
208 VOLTAGE MONITOR MADC CH

SIZE D — DRAWING NUMBER 94028559 — REV. A
MATERIAL: ——— SCALE: NA WEIGHT: – SHEET 78

*AUTOCAD