RHIC Accelerator Controls Section
Alcove 1007C Wiring Diagrams
BNL Drawing Number 94028624

Brookhaven National Laboratory, Upton, New York 11973

Created By: Ed Koropsak
Last Updated 6/17/03

Power Distribution
- Rack R07C08 (Sheet 1)
- Rack R07C09, Rack R07C10 (Sheet 2)

Spares
- Spare Fiber Optic Receiver/Transmitter Channels (Sheet 3)
- 4122 Analog Outputs (Sheet 3)
- Spare MADC Channels (Sheet 54)

Serial Links
- Event Link (Sheet 4,5)
- Real Time Data Link (RTDL) (Sheet 6,7)
- Reset Link (Sheet 8)
- Beam Sync Yellow Link (Sheet 9)
- Beam Sync Blue Link (Sheet 10)

VME Chassis CFE-7C-PS1 modules
- CPU, Memory Board, V108 Utility Module (Sheet 11)
- V113/V114 MADC System (Sheet 12)
- V115 WFG A: bo7-th4, bo7-tv5 (Sheet 13)
- V115 WFG B: bo7-th6, bo7-tv7 (Sheet 14)
- V115 WFG C: bo7-th8, bo7-tv9 (Sheet 15)
- V115 WFG D: bo7-th10, bo7-tv11 (Sheet 16)
- V115 WFG E: bo7-th12, bo7-tv13 (Sheet 17)
- V115 WFG F: bo7-th14, bo7-qs-ps (Sheet 18)
- V115 WFG G: bo7-octf-ps, bo7-octd-ps (Sheet 19)
- V115 WFG H: bo7-qgt-ps, bo7-th2 (Sheet 20)
- V115 WFG I: bo7-qs3, bo7-tv3 (Sheet 21)
- V115 WFG J: bo7-oct2, bo7-dec2 (Sheet 22)
- 4122 Gamma Transition Ref. Voltage (Sheet 53)

NOTE: Sheets 47,49, 50 are Blank

VME Chassis CFE-7C-PS3 modules
- CPU, Memory Board, Utility Module (Sheet 45)
- V113/V114 MADC System (Sheet 46)
- (Sheet 47)
- V102 Delay Module A - Event Link (Sheet 48)
- V120 Permit Module (Sheet 51)
- Permit System Interface Panel (Sheet 52)
- V115 WFG A: bo7-dod2, bo7-sx3 (Sheet 23)
- V115 WFG B: bo7-oct3, bo7-dod3 (Sheet 24)
- V115 WFG C: bo7-sxs3, bo7-octs3(future) (Sheet 25)
- V115 WFG D: bo7-rot3-1, bo7-rot3-2 (Sheet 26)
- V115 WFG E: bo7-defocdec(future) (Sheet 27)
- V115 WFG F: yi7-dod2, yi7-sx3 (Sheet 40)
- V115 WFG G: yi7-oct3, yi7-dod3 (Sheet 41)
- V115 WFG H: yi7-sxs3, yi7-octs3(future) (Sheet 42)
- V115 WFG I: yi7-rot3-1, yi7-rot3-2 (Sheet 43)
- V115 WFG J: yi7-defocdec(future) (Sheet 44)

VME Chassis CFE-7C-PS2 modules
- CPU, Memory Board, V108 Utility Module (Sheet 28)
- V113/V114 MADC System (Sheet 29)
- V115 WFG A: yi7-tv4, yi7-th5 (Sheet 30)
- V115 WFG B: yi7-tv6, yi7-th7 (Sheet 31)
- V115 WFG C: yi7-tv8, yi7-th9 (Sheet 32)
- V115 WFG D: yi7-tv10, yi7-th11 (Sheet 33)
- V115 WFG E: yi7-tv12, yi7-th13 (Sheet 34)
- V115 WFG F: yi7-tv14, yi7-qs-ps (Sheet 35)
- V115 WFG G: yi7-octf-ps, yi7-octd-ps (Sheet 36)
- V115 WFG H: yi7-qgt-ps, yi7-tv2 (Sheet 37)
- V115 WFG I: yi7-qs3, yi7-th3 (Sheet 38)
- V115 WFG J: yi7-oct2, yi7-dec2 (Sheet 39)

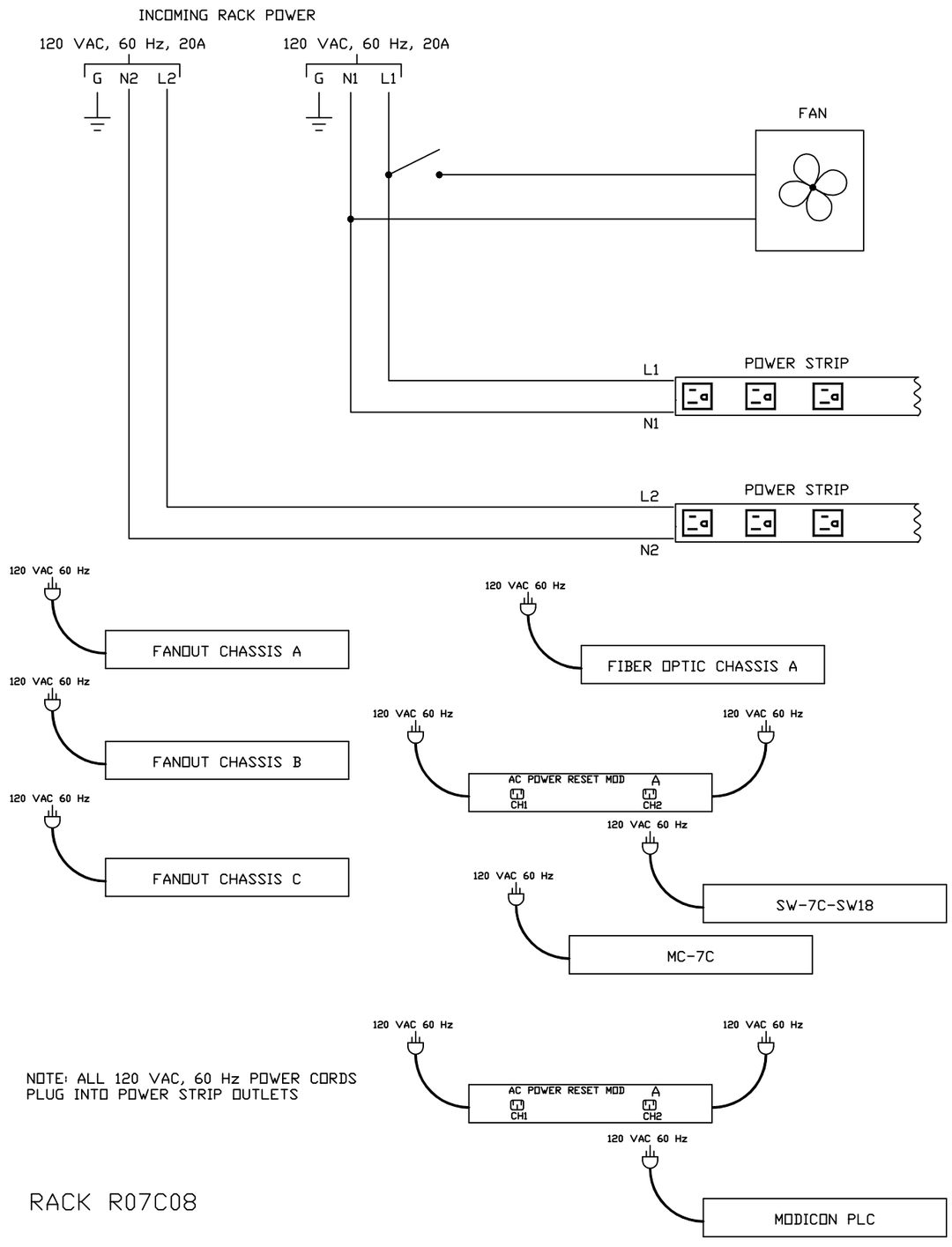

NOTE: ALL 120 VAC, 60 Hz POWER CORDS PLUG INTO POWER STRIP OUTLETS

RACK R07C08

REV.	ZONE	ECN NO.	DATE	BY	CKR	APP.

CONTROLS- 5/30/03 2:15 PM 8624_01.dwg

-3	-2	-1	REF DESIGNATOR	ITEM NO.	DESCRIPTION	MAT'L DWG NO.,BNL NO.
		150		11	CABLE ASSY, POWER SUPPLY TO MADC A/D I/O PANEL (3 CABLES/PS)	
		50		10	CABLE ASSY, LOW RES PS IF MODULE TO POWER SUPPLY	
		1		9	PERMIT SYSTEM INTERFACE CABLE, T120 TO PERMIT SYSTEM INTERFACE PANEL	D09-E2225-2
		33		8	SERIAL LINK TWINAX CABLE, LENGTH AS REQUIRED	94028176
		52		7	SERIAL LINK TWINAX CABLE, 1 FT	94028176
		50		6	DUPLEX MULTIMODE FIBER OPTIC CABLE, T115 TO LOW RES PS INTERFACE MODULE	94028249
		13		5	SINGLE MODE FIBER OPTIC CABLE	94028251
		12		4	MADC A/D I/O CABLE	94028216
		27		3	TRANSITION MODULE P2 RIBBON CABLE, V115, V120	94028159
		3		2	MADC V113 TO V114 P2 INTERFACE RIBBON CABLE	94028218
		3		1	NETWORK CABLE TO FEC	

QTY REQD

INTERPRET IN GENERAL ACCORDANCE WITH ASME Y14.24M-1989

UNLESS OTHERWISE SPECIFIED DIMENSIONS ARE IN INCHES

DECIMAL TOLERANCES
.X ±.030
.XX ±.015
.XXX ±.005
ANGULAR TOLERANCE ± .5°

OUTSTANDING ECN

NA FINISH

BREAK SHARP EDGES MAX. XX MIN. XX

Q.A. CATEGORY A-3

		DATE
DRAWN BY	Ed Koropsak	3/5/98
CHECKED BY		
DESIGN APPROVAL		
ENGINEER APPROVAL	R. MICHNOFF	3/3/98
SUPVR. APPROVAL		

NEXT ASSEMBLY

BROOKHAVEN NATIONAL LABORATORY
UPTON, N.Y. 11973

RHIC CONTROLS WIRING DIAGRAM
ALCOVE 1007C, RACK R07C08

POWER DISTRIBUTION

SIZE D

94028624 DRAWING NUMBER

REV. A

MATERIAL: ——— SCALE: NA WEIGHT: – SHEET 1

*AUTOCAD

REV.	ZONE	ECN NO.	DATE	BY	CKR	APP.

ACS, BNL 8/24/00 10:29 AM 8624_02.dwg

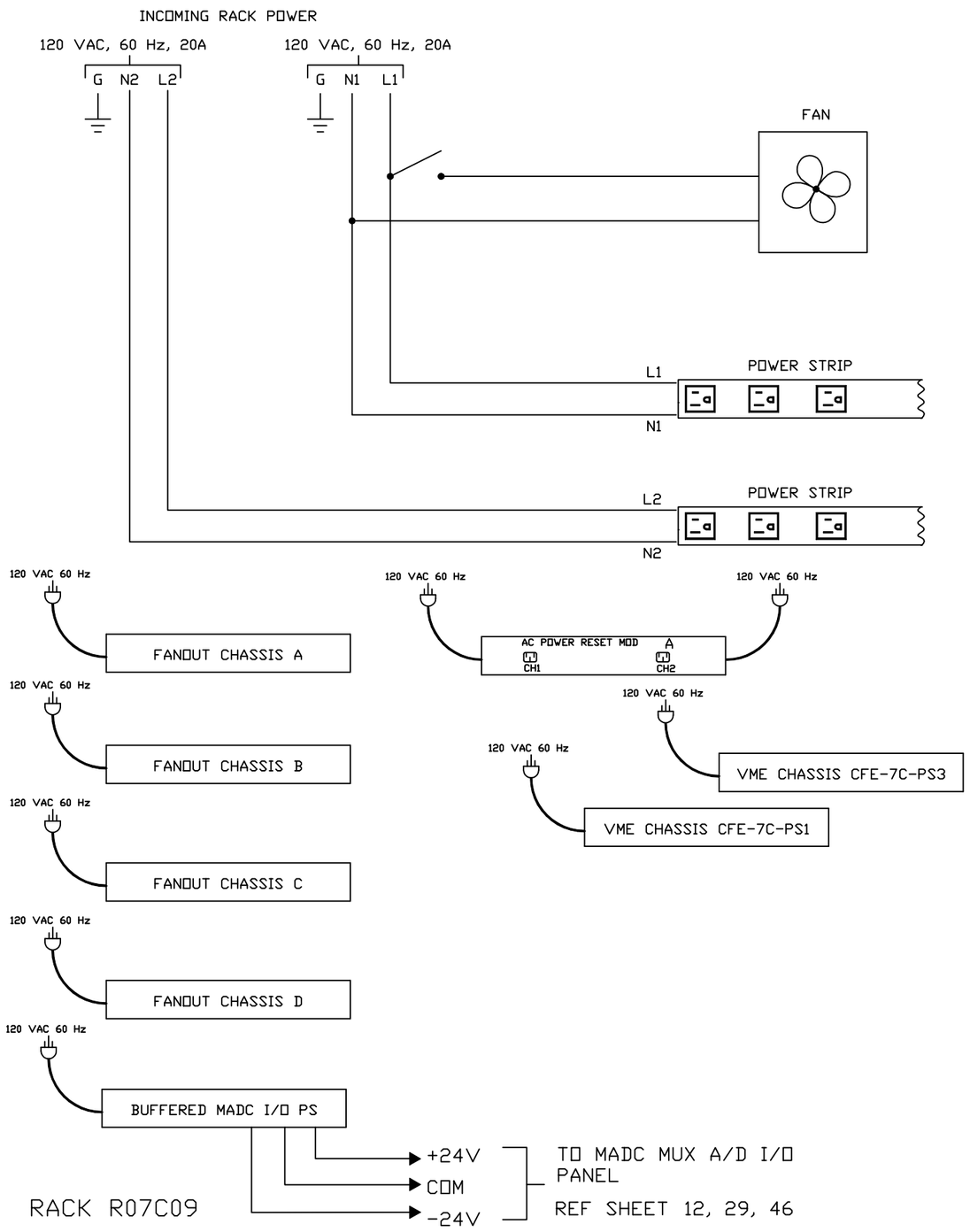

NOTE: ALL 120 VAC, 60 Hz POWER CORDS
PLUG INTO POWER STRIP OUTLETS EXCEPT FOR 6U VME CHASSIS

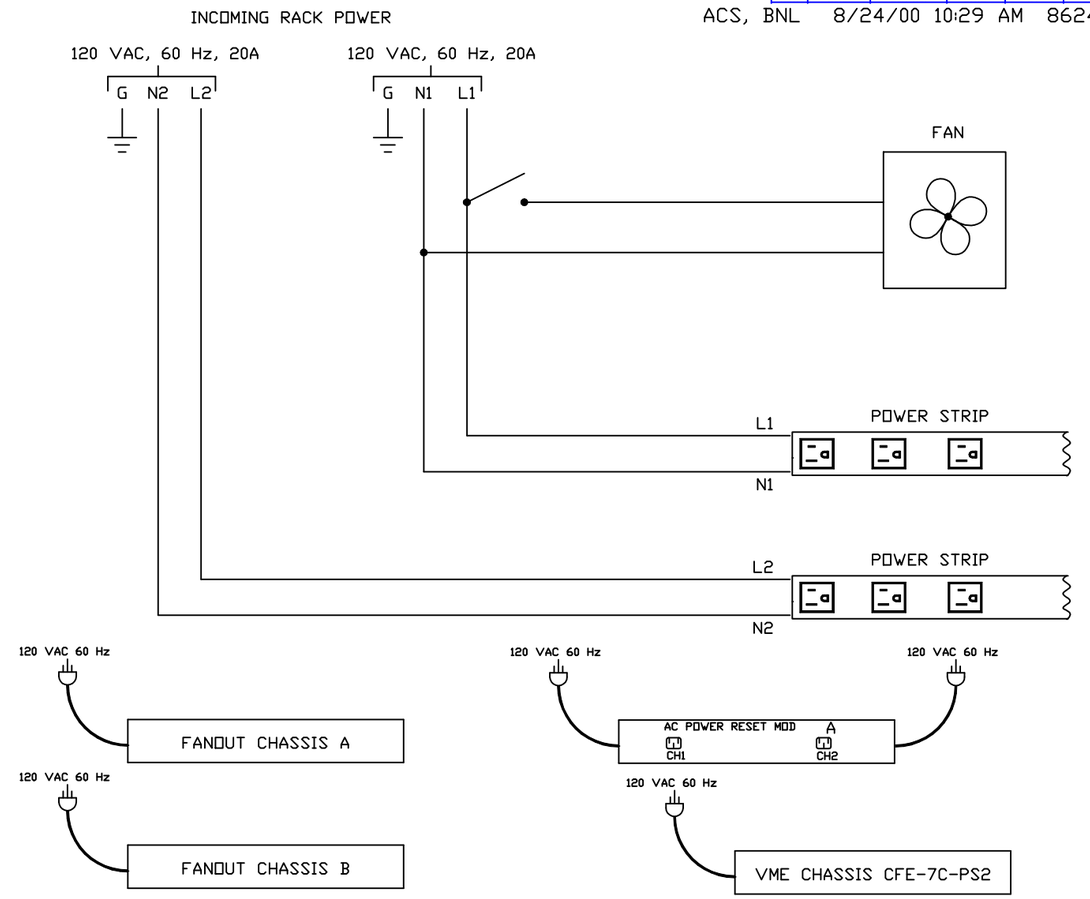

NOTE: ALL 120 VAC, 60 Hz POWER CORDS
PLUG INTO POWER STRIP OUTLETS EXCEPT FOR 6U VME CHASSIS

-3	-2	-1	REF DESIGNATOR	ITEM NO.	DESCRIPTION	MAT'L DWG NO.,SPNL NO.
QTY REQD						

INTERPRET IN GENERAL ACCORDANCE WITH ASME Y14.24M-1989	Q.A. CATEGORY A-3	DATE	BROOKHAVEN NATIONAL LABORATORY UPTON, N.Y. 11973
	DRAWN BY Venegas	8/11/99	
UNLESS OTHERWISE SPECIFIED DIMENSIONS ARE IN INCHES	CHECKED BY		RHIC CONTROLS WIRING DIAGRAM
DECIMAL TOLERANCES .X ±.030 .XX ±.015 .XXX ±.005 ANGULAR TOLERANCE ± .5°	DESIGN APPROVAL		ALCOVE 1007C RACK R07C09, R07C10
	ENGINEER APPROVAL R. MICHNOFF	10/29/97	POWER DISTRIBUTION
	SUPVR. APPROVAL		SIZE D — DRAWING NUMBER 94028624 — REV. A
NA FINISH — BREAK SHARP EDGES MAX. XX MIN. XX	NEXT ASSEMBLY		MATERIAL: — SCALE: NA WEIGHT: — SHEET 2 OF X
OUTSTANDING ECN			

*AUTOCAD

REV.	ZONE	ECN NO.	DATE	BY	CKR	APP.

ACS, BNL 12/3/99 2:07 PM 8624_03.dwg

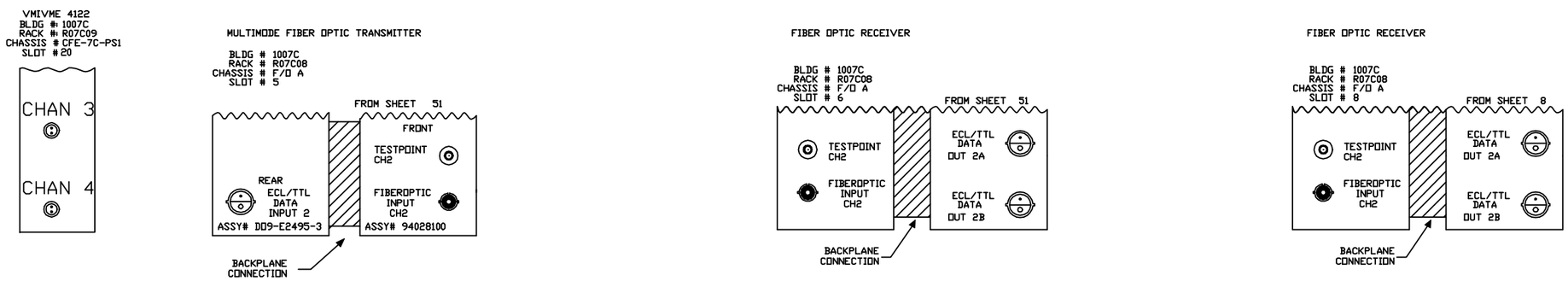

-3	-2	-1	REF DESIGNATOR	ITEM NO.	DESCRIPTION	MAT'L DWG NO.,BNL NO.
QTY REQD						

INTERPRET IN GENERAL ACCORDANCE WITH ASME Y14.24M-1989

UNLESS OTHERWISE SPECIFIED DIMENSIONS ARE IN INCHES

DECIMAL TOLERANCES
.X ±.030
.XX ±.015
.XXX ±.005
ANGULAR TOLERANCE
± .5°

NA FINISH

BREAK SHARP EDGES
MAX. XX MIN. XX

OUTSTANDING ECN

Q.A. CATEGORY A-3		DATE
DRAWN BY	Ed Koropsak	3/5/98
CHECKED BY		
DESIGN APPROVAL		
ENGINEER APPROVAL	R. MICHNOFF	3/5/98
SUPVR. APPROVAL		
NEXT ASSEMBLY		

BROOKHAVEN NATIONAL LABORATORY
UPTON, N.Y. 11973

RHIC CONTROLS WIRING DIAGRAM

ALCOVE 1007C

SPARE F/O RCVR/XMIT CHANNELS

SIZE D | DRAWING NUMBER 94028624 | REV. A

MATERIAL: ——— SCALE: NA WEIGHT: – SHEET 3 OF 53

*AUTOCAD

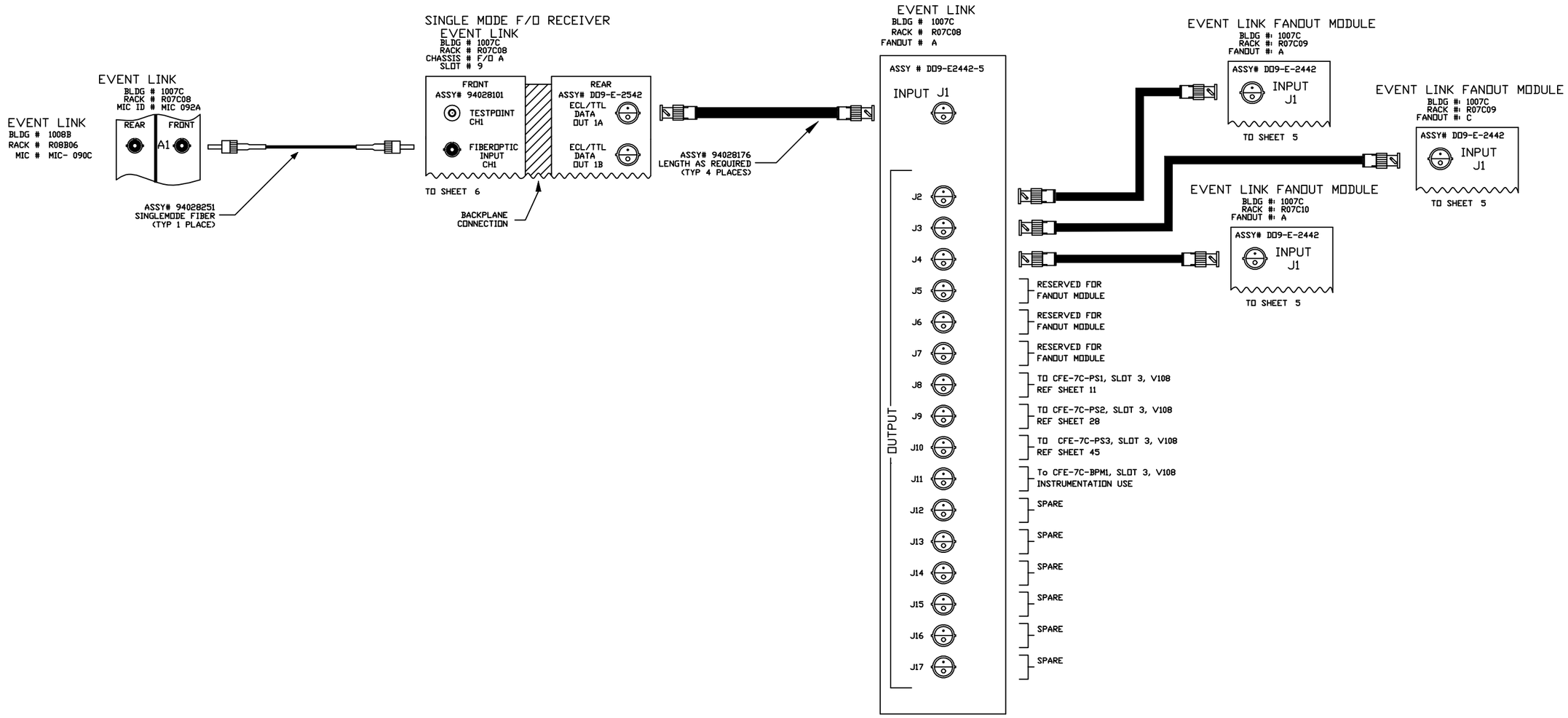

REV.	ZONE	ECN NO.	DATE	BY	CKR	APP.

-3	-2	-1	REF DESIGNATOR	ITEM NO.	DESCRIPTION	MAT'L. DWG NO./INL NO.
QTY REQD						

INTERPRET IN GENERAL ACCORDANCE WITH ASME Y14.24M-1989

UNLESS OTHERWISE SPECIFIED DIMENSIONS ARE IN INCHES

DECIMAL TOLERANCES
.X ±.030
.XX ±.015
.XXX ±.005
ANGULAR TOLERANCE
± .5°

NA FINISH

BREAK SHARP EDGES
MAX. XX MIN. XX

OUTSTANDING ECN

Q.A. CATEGORY A-3		DATE
DRAWN BY	Ed Koropsak	3/5/98
CHECKED BY		
DESIGN APPROVAL		
ENGINEER APPROVAL	R. MICHNOFF	3/5/98
SUPVR. APPROVAL		

NEXT ASSEMBLY

BROOKHAVEN NATIONAL LABORATORY
ASSOCIATED UNIVERSITIES, INC.
UPTON, N.Y. 11973

RHIC CONTROLS WIRING DIAGRAM
ALCOVE 1007C
EVENT LINK

SIZE D | DRAWING NUMBER 94028624 | REV. A

MATERIAL: ——— SCALE: NA WEIGHT: – SHEET 4 OF 52

*AUTOCAD

REV.	ZONE	ECN NO.	DATE	BY	CKR	APP.

CONTROLS- 2/28/01 1:22 PM 8624_05.dwg

EVENT LINK FANOUT MODULE

BLDG # 1007C
RACK # R07C09
FANOUT # A

FROM SHEET 4
ASSY # DD9-E2442-5

OUTPUT

J2	SPARE
J3	SPARE
J4	SPARE
J5	SPARE
J6	SPARE
J7	SPARE
J8	To CFE-7C-PS1, SLOT 15, T115 REF SHEET 22
J9	To CFE-7C-PS1, SLOT 14, T115 REF SHEET 21
J10	To CFE-7C-PS1, SLOT 13, T115 REF SHEET 20
J11	To CFE-7C-PS1, SLOT 12, T115 REF SHEET 19
J12	To CFE-7C-PS1, SLOT 11, T115 REF SHEET 18
J13	To CFE-7C-PS1, SLOT 10, T115 REF SHEET 17
J14	To CFE-7C-PS1, SLOT 9, T115 REF SHEET 16
J15	To CFE-7C-PS1, SLOT 8, T115 REF SHEET 15
J16	To CFE-7C-PS1, SLOT 7, T115 REF SHEET 14
J17	To CFE-7C-PS1, SLOT 6, T115 REF SHEET 13

EVENT LINK FANOUT MODULE

BLDG # 1007C
RACK # R07C09
FANOUT # C

FROM SHEET 4
ASSY # DD9-E2442-5

OUTPUT

J2	To CFE-7C-PS3, SLOT 21, V120 REF SHEET 51
J3	SPARE
J4	To CFE-7C-PS3, SLOT 17, T115 REF SHEET 44
J5	To CFE-7C-PS3, SLOT 16, T115 REF SHEET 43
J6	To CFE-7C-PS3, SLOT 15, T115 REF SHEET 42
J7	To CFE-7C-PS3, SLOT 14, T115 REF SHEET 41
J8	To CFE-7C-PS3, SLOT 13, T115 REF SHEET 40
J9	To CFE-7C-PS3, SLOT 12, T115 REF SHEET 27
J10	To CFE-7C-PS3, SLOT 11, T115 REF SHEET 26
J11	To CFE-7C-PS3, SLOT 10, T115 REF SHEET 25
J12	To CFE-7C-PS3, SLOT 9, T115 REF SHEET 24
J13	To CFE-7C-PS3, SLOT 8, T115 REF SHEET 23
J14	To CFE-7C-PS3, SLOT 7, V102 REF SHEET 48
J15	To CFE-7C-PS3, SLOT 4, V113 REF SHEET 46
J16	To CFE-7C-PS2, SLOT 4, V113 REF SHEET 29
J17	To CFE-7C-PS1, SLOT 4, V113 REF SHEET 12

EVENT LINK FANOUT MODULE

BLDG # 1007C
RACK # R07C10
FANOUT # A

FROM SHEET 4
ASSY # DD9-E2442-5

OUTPUT

J2	SPARE
J3	SPARE
J4	SPARE
J5	SPARE
J6	SPARE
J7	SPARE
J8	To CFE-7C-PS2, SLOT 15, T115 REF SHEET 39
J9	To CFE-7C-PS2, SLOT 14, T115 REF SHEET 38
J10	To CFE-7C-PS2, SLOT 13, T115 REF SHEET 37
J11	To CFE-7C-PS2, SLOT 12, T115 REF SHEET 36
J12	To CFE-7C-PS2, SLOT 11, T115 REF SHEET 35
J13	To CFE-7C-PS2, SLOT 10, T115 REF SHEET 34
J14	To CFE-7C-PS2, SLOT 9, T115 REF SHEET 33
J15	To CFE-7C-PS2, SLOT 8, T115 REF SHEET 32
J16	To CFE-7C-PS2, SLOT 7, T115 REF SHEET 31
J17	To CFE-7C-PS2, SLOT 6, T115 REF SHEET 30

-3	-2	-1	REF DESIGNATOR	ITEM NO.	DESCRIPTION	MAT'L. DWG NO.,BINL NO.
QTY REQD						

INTERPRET IN GENERAL ACCORDANCE WITH ASME Y14.24M-1989

UNLESS OTHERWISE SPECIFIED DIMENSIONS ARE IN INCHES

DECIMAL TOLERANCES
.X ±.030
.XX ±.015
.XXX ±.005
ANGULAR TOLERANCE
± .5°

OUTSTANDING ECN

NA FINISH

BREAK SHARP EDGES
MAX. XX MIN. XX

Q.A. CATEGORY A-3		DATE
DRAWN BY	Ed Koropsak	3/5/98
CHECKED BY		
DESIGN APPROVAL		
ENGINEER APPROVAL	R. MICHNOFF	3/5/98
SUPVR. APPROVAL		

NEXT ASSEMBLY

BROOKHAVEN NATIONAL LABORATORY
UPTON, N.Y. 11973

RHIC CONTROLS WIRING DIAGRAM
ALCOVE 1007C
EVENT LINK

SIZE D
94028624
DRAWING NUMBER
REV. A

MATERIAL: ——— SCALE: NA WEIGHT: – SHEET 5 OF 53

*AUTOCAD

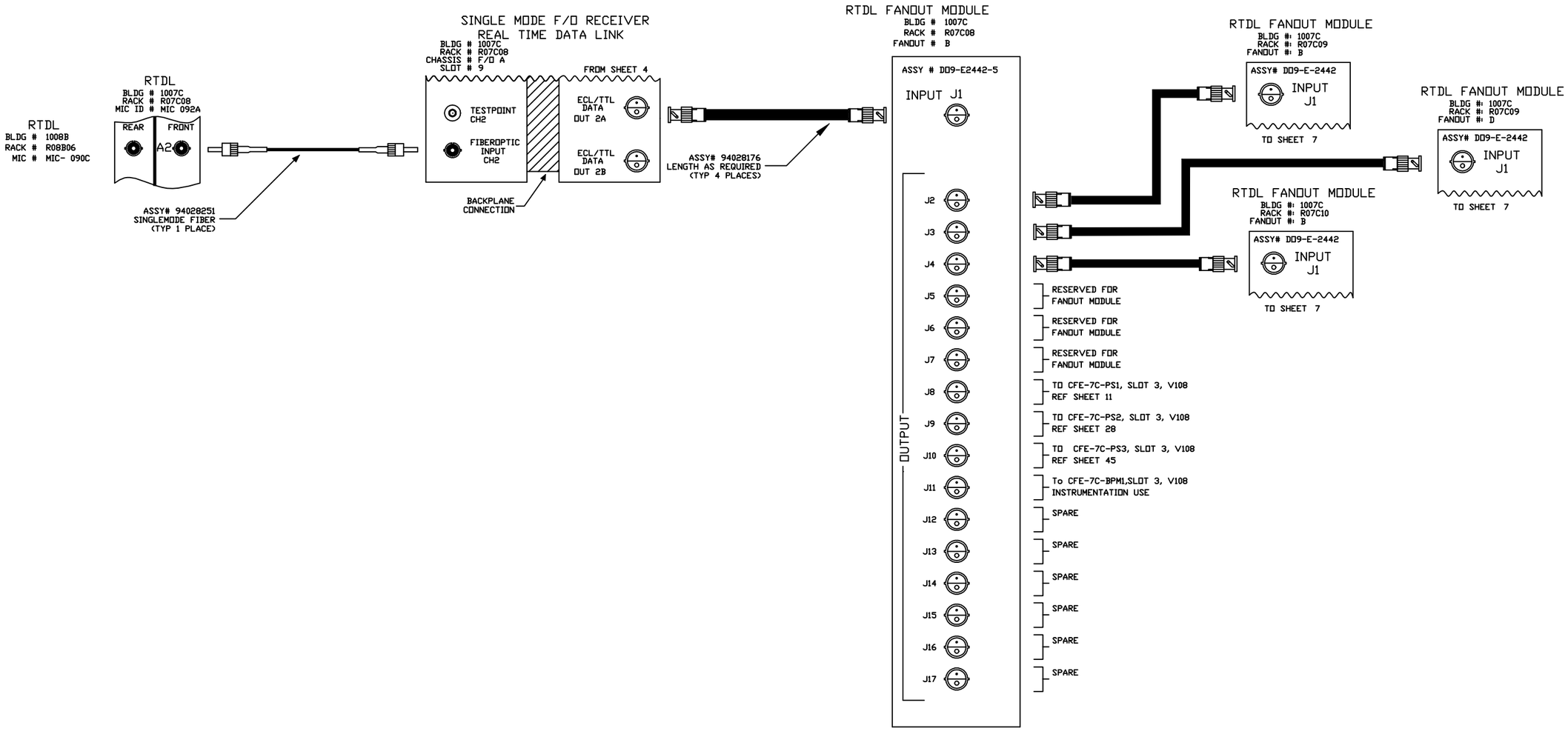

REV.	ZONE	ECN NO.	DATE	BY	CKR	APP.

-3	-2	-1	REF DESIGNATOR	ITEM NO.	DESCRIPTION	MAT'L. DWG NO./INL NO.
QTY REQD						

INTERPRET IN GENERAL ACCORDANCE WITH ASME Y14.24M-1989

UNLESS OTHERWISE SPECIFIED DIMENSIONS ARE IN INCHES

DECIMAL TOLERANCES
.X ±.030
.XX ±.015
.XXX ±.005
ANGULAR TOLERANCE
± .5°

OUTSTANDING ECN

NA FINISH

BREAK SHARP EDGES
MAX. XX MIN. XX

Q.A. CATEGORY A-3		DATE
DRAWN BY	Ed Koropsak	3/5/98
CHECKED BY		
DESIGN APPROVAL		
ENGINEER APPROVAL	R. MICHNOFF	3/5/98
SUPVR. APPROVAL		

NEXT ASSEMBLY

BROOKHAVEN NATIONAL LABORATORY
ASSOCIATED UNIVERSITIES, INC.
UPTON, N.Y. 11973

RHIC CONTROLS WIRING DIAGRAM
ALCOVE 1007C
REAL TIME DATA LINK

SIZE D | DRAWING NUMBER 94028624 | REV. A

MATERIAL: ——— | SCALE: NA | WEIGHT: – | SHEET 6 OF 52

*AUTOCAD

REV.	ZONE	ECN NO.	DATE	BY	CKR	APP.

CONTROLS- 2/28/01 1:27 PM 8624_07.dwg

RTDL FANOUT MODULE

BLDG # 1007C
RACK # R07C09
FANOUT # B

FROM SHEET 6
ASSY # DD9-E2442-5

OUTPUT

J2	SPARE
J3	SPARE
J4	SPARE
J5	SPARE
J6	SPARE
J7	SPARE
J8	To CFE-7C-PS1, SLOT 15, T115 REF SHEET 22
J9	To CFE-7C-PS1, SLOT 14, T115 REF SHEET 21
J10	To CFE-7C-PS1, SLOT 13, T115 REF SHEET 20
J11	To CFE-7C-PS1, SLOT 12, T115 REF SHEET 19
J12	To CFE-7C-PS1, SLOT 11, T115 REF SHEET 18
J13	To CFE-7C-PS1, SLOT 10, T115 REF SHEET 17
J14	To CFE-7C-PS1, SLOT 9, T115 REF SHEET 16
J15	To CFE-7C-PS1, SLOT 8, T115 REF SHEET 15
J16	To CFE-7C-PS1, SLOT 7, T115 REF SHEET 14
J17	To CFE-7C-PS1, SLOT 6, T115 REF SHEET 13

RTDL FANOUT MODULE

BLDG # 1007C
RACK # R07C09
FANOUT # D

FROM SHEET 6
ASSY # DD9-E2442-5

OUTPUT

J2	SPARE
J3	SPARE
J4	To CFE-7C-PS3, SLOT 17, T115 REF SHEET 27
J5	To CFE-7C-PS3, SLOT 17, T115 REF SHEET 26
J6	To CFE-7C-PS3, SLOT 17, T115 REF SHEET 25
J7	To CFE-7C-PS3, SLOT 17, T115 REF SHEET 24
J8	To CFE-7C-PS3, SLOT 17, T115 REF SHEET 23
J9	To CFE-7C-PS3, SLOT 17, T115 REF SHEET 44
J10	To CFE-7C-PS3, SLOT 17, T115 REF SHEET 43
J11	To CFE-7C-PS3, SLOT 17, T115 REF SHEET 42
J12	To CFE-7C-PS3, SLOT 17, T115 REF SHEET 41
J13	To CFE-7C-PS3, SLOT 17, T115 REF SHEET 40
J14	SPARE
J15	SPARE
J16	SPARE
J17	SPARE

RTDL FANOUT MODULE

BLDG # 1007C
RACK # R07C10
FANOUT # B

FROM SHEET 6
ASSY # DD9-E2442-5

OUTPUT

J2	SPARE
J3	SPARE
J4	SPARE
J5	SPARE
J6	SPARE
J7	SPARE
J8	To CFE-7C-PS2, SLOT 15, T115 REF SHEET 39
J9	To CFE-7C-PS2, SLOT 14, T115 REF SHEET 38
J10	To CFE-7C-PS2, SLOT 13, T115 REF SHEET 37
J11	To CFE-7C-PS2, SLOT 12, T115 REF SHEET 36
J12	To CFE-7C-PS2, SLOT 11, T115 REF SHEET 35
J13	To CFE-7C-PS2, SLOT 10, T115 REF SHEET 34
J14	To CFE-7C-PS2, SLOT 9, T115 REF SHEET 33
J15	To CFE-7C-PS2, SLOT 8, T115 REF SHEET 32
J16	To CFE-7C-PS2, SLOT 7, T115 REF SHEET 31
J17	To CFE-7C-PS2, SLOT 6, T115 REF SHEET 30

-3	-2	-1	REF DESIGNATOR	ITEM NO.	DESCRIPTION	MAT'L. DWG NO.,BINL NO.
QTY REQD						

INTERPRET IN GENERAL ACCORDANCE WITH ASME Y14.24M-1989

UNLESS OTHERWISE SPECIFIED DIMENSIONS ARE IN INCHES

DECIMAL TOLERANCES
.X ±.030
.XX ±.015
.XXX ±.005
ANGULAR TOLERANCE ± .5°

OUTSTANDING ECN

NA FINISH

BREAK SHARP EDGES
MAX. XX MIN. XX

Q.A. CATEGORY A-3		DATE
DRAWN BY	Ed Koropsak	3/5/98
CHECKED BY		
DESIGN APPROVAL		
ENGINEER APPROVAL	R. MICHNOFF	3/5/98
SUPVR. APPROVAL		

NEXT ASSEMBLY

BROOKHAVEN NATIONAL LABORATORY
UPTON, N.Y. 11973

RHIC CONTROLS WIRING DIAGRAM
ALCOVE 1007C

REAL TIME DATA LINK

SIZE D
94028624
DRAWING NUMBER
REV. A

MATERIAL: ——— SCALE: NA WEIGHT: – SHEET 7 OF 53

*AUTOCAD

REV.	ZONE	ECN NO.	DATE	BY	CKR	APP.

CONTROLS- 2/28/01 1:32 PM 8624_08.dwg

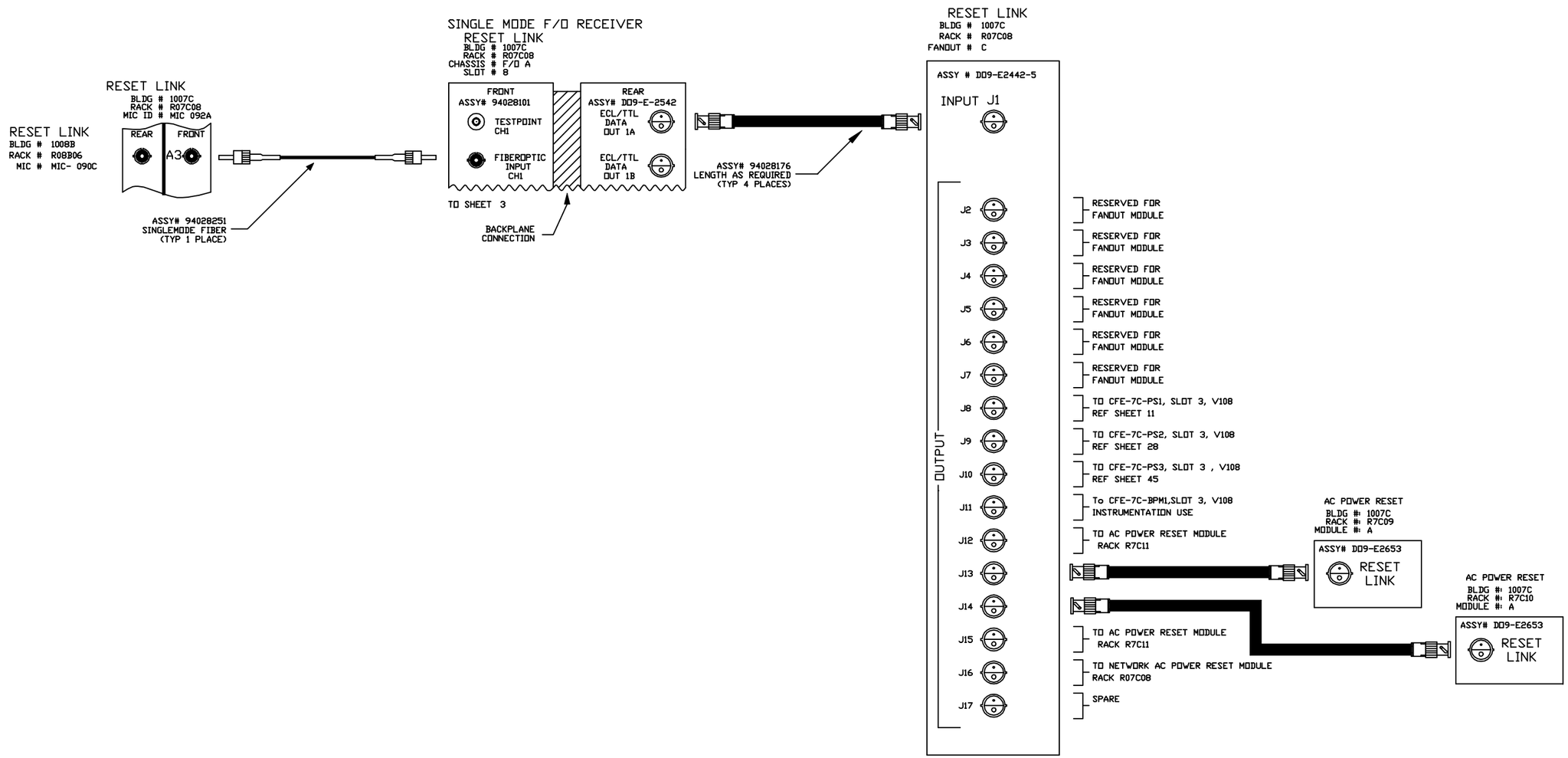

-3	-2	-1	REF DESIGNATOR	ITEM NO.	DESCRIPTION	MAT'L DWG NO./DWG NO.
QTY REQD						

INTERPRET IN GENERAL ACCORDANCE WITH ASME Y14.24M-1989	Q.A. CATEGORY A-3	DATE	BROOKHAVEN NATIONAL LABORATORY UPTON, N.Y. 11973
UNLESS OTHERWISE SPECIFIED DIMENSIONS ARE IN INCHES	DRAWN BY Venegas	8/11/99	RHIC CONTROLS WIRING DIAGRAM
DECIMAL TOLERANCES .X ±.030 .XX ±.015 .XXX ±.005 ANGULAR TOLERANCE ± .5°	CHECKED BY		ALCOVE 1007C
	DESIGN APPROVAL		RESET LINK
	ENGINEER APPROVAL R. MICHNOFF	10/23/97	
	SUPVR. APPROVAL		SIZE D — 94028624 — REV. A
NA FINISH — BREAK SHARP EDGES MAX. XX MIN. XX	NEXT ASSEMBLY		DRAWING NUMBER
OUTSTANDING ECN			MATERIAL: ——— SCALE: NA WEIGHT: – SHEET 8 OF 53

*AUTOCAD

REV.	ZONE	ECN NO.	DATE	BY	CKR	APP.

ACS, BNL 8/24/00 10:31 AM 8624_09.dwg

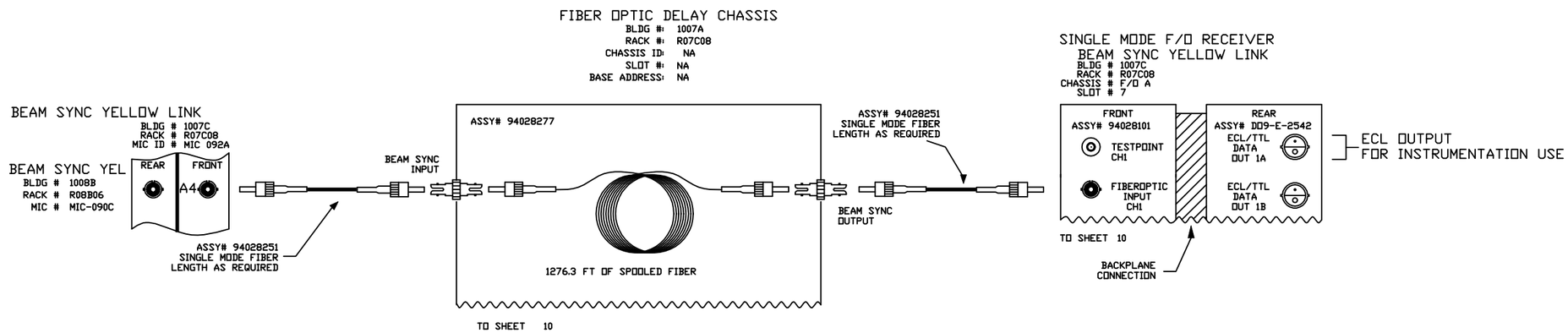

-3	-2	-1	REF DESIGNATOR	ITEM NO.	DESCRIPTION	MAT'L. DWG NO.,BNL NO.
QTY REQD						

INTERPRET IN GENERAL ACCORDANCE WITH ASME Y14.24M-1989

UNLESS OTHERWISE SPECIFIED DIMENSIONS ARE IN INCHES

DECIMAL TOLERANCES
.X ±.030
.XX ±.015
.XXX ±.005
ANGULAR TOLERANCE
± .5°

NA FINISH

BREAK SHARP EDGES
MAX. XX MIN. XX

OUTSTANDING ECN

Q.A. CATEGORY A-3		DATE	BROOKHAVEN NATIONAL LABORATORY
DRAWN BY	Ed Koropsak	3/5/98	UPTON, N.Y. 11973
CHECKED BY			RHIC CONTROLS WIRING DIAGRAM
DESIGN APPROVAL			ALCOVE 1007C
ENGINEER APPROVAL	R. MICHNOFF	3/5/98	BEAM SYNC YELLOW LINK
SUPVR. APPROVAL			SIZE D — 94028624 — REV. A
NEXT ASSEMBLY			DRAWING NUMBER

MATERIAL: ——— SCALE: NA WEIGHT: – SHEET 9 OF 52

*AUTOCAD

ACS, BNL 8/24/00 10:32 AM 8624_10.dwg

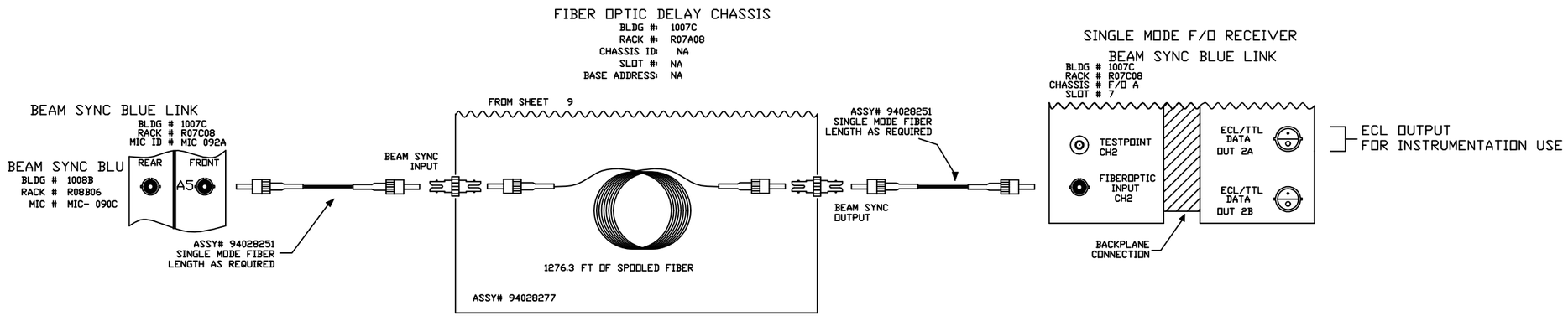

-3	-2	-1	REF DESIGNATOR	ITEM NO.	DESCRIPTION	MAT'L. DWG NO.,BNL NO.
QTY REQD						

INTERPRET IN GENERAL ACCORDANCE WITH ASME Y14.24M-1989

UNLESS OTHERWISE SPECIFIED DIMENSIONS ARE IN INCHES

DECIMAL TOLERANCES
.X ±.030
.XX ±.015
.XXX ±.005
ANGULAR TOLERANCE
± .5°

NA FINISH

BREAK SHARP EDGES
MAX. XX MIN. XX

OUTSTANDING ECN

Q.A. CATEGORY A-3		DATE
DRAWN BY	Ed Koropsak	3/5/98
CHECKED BY		
DESIGN APPROVAL		
ENGINEER APPROVAL	R. MICHNOFF	3/5/98
SUPVR. APPROVAL		
NEXT ASSEMBLY		

BROOKHAVEN NATIONAL LABORATORY
UPTON, N.Y. 11973

RHIC CONTROLS WIRING DIAGRAM
ALCOVE 1007C
BEAM SYNC BLUE LINK

SIZE D
DRAWING NUMBER 94028624
REV. A

MATERIAL: ——— SCALE: NA WEIGHT: – SHEET 10 OF 52

*AUTOCAD

CONTROLS- 6/17/03 1:13 PM 8624_11.dwg

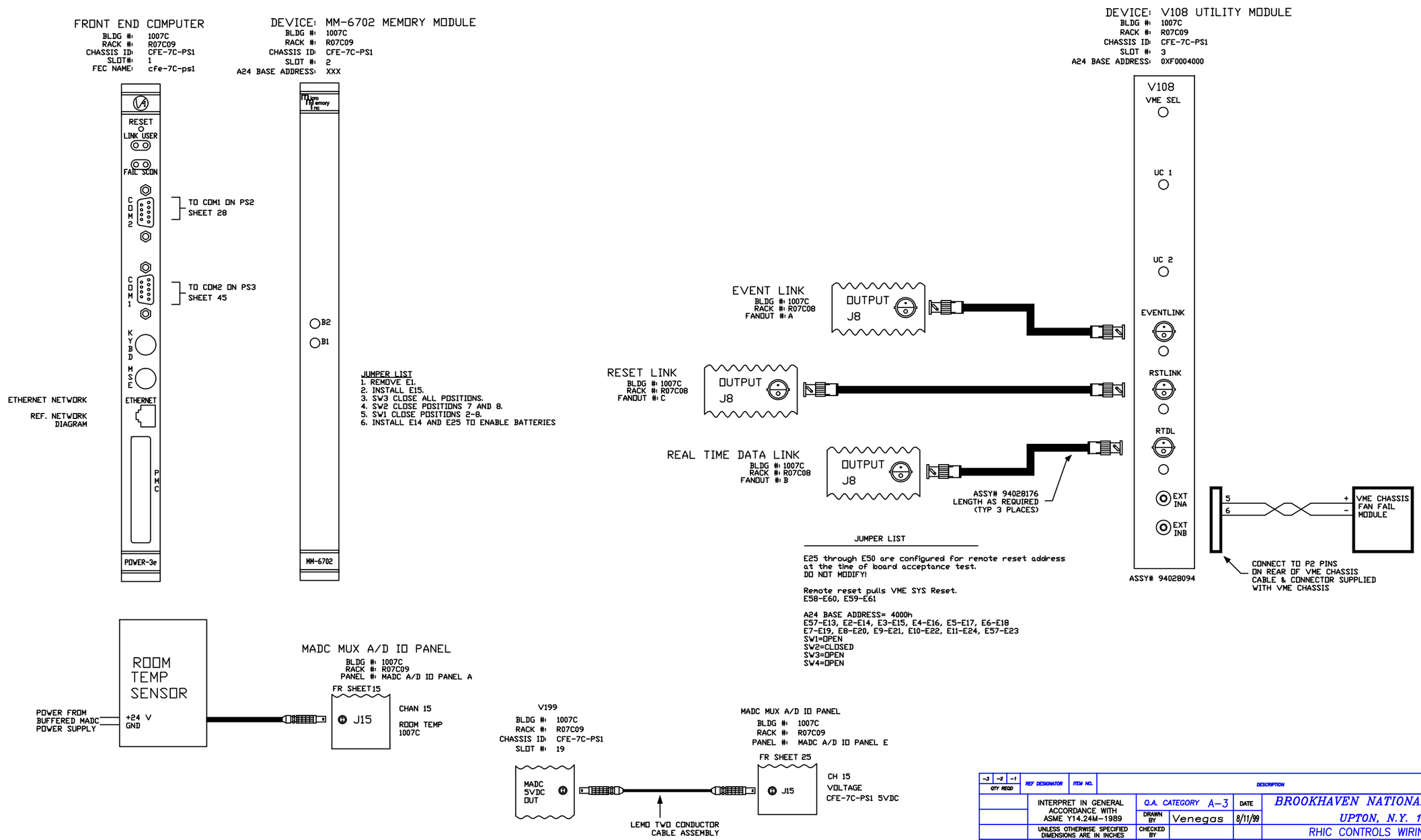

REV.	ZONE	ECN NO.	DATE	BY	CKR	APP.

-3	-2	-1	REF DESIGNATOR	ITEM NO.	DESCRIPTION	MAT'L DWG NO.,SPNL NO.
QTY REQD						

INTERPRET IN GENERAL ACCORDANCE WITH ASME Y14.24M-1989

UNLESS OTHERWISE SPECIFIED DIMENSIONS ARE IN INCHES

DECIMAL TOLERANCES
.X ±.030
.XX ±.015
.XXX ±.005
ANGULAR TOLERANCE ± .5°

NA FINISH

BREAK SHARP EDGES MAX. XX MIN. XX

OUTSTANDING ECN

Q.A. CATEGORY A-3	DATE	
DRAWN BY Venegas	8/11/99	
CHECKED BY		
DESIGN APPROVAL		
ENGINEER APPROVAL R. MICHNOFF	10/21/97	
SUPVR. APPROVAL		
NEXT ASSEMBLY		

BROOKHAVEN NATIONAL LABORATORY
UPTON, N.Y. 11973

RHIC CONTROLS WIRING DIAGRAM

ALCOVE 1007C, VME CHASSIS CFE-7C-PS1

CPU/MEMORY /V108 UTIL MODULE

SIZE D | DRAWING NUMBER 94028624 | REV. A

MATERIAL: ——— SCALE: NA WEIGHT: – SHEET 11

*AUTOCAD

ACS, BNL 8/24/00 10:43 AM 8624_12.dwg

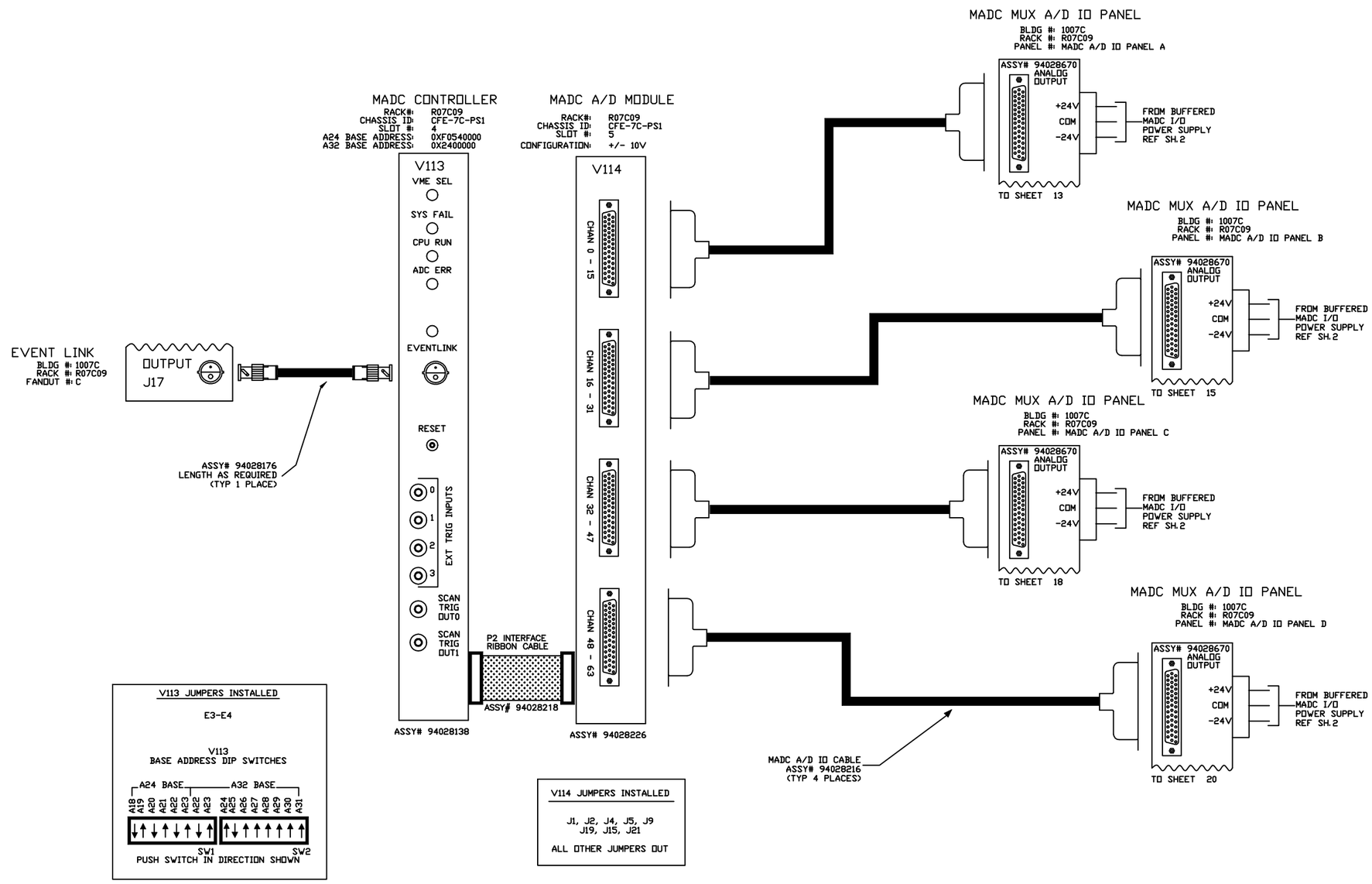

V113 JUMPERS INSTALLED

E3-E4

V113
BASE ADDRESS DIP SWITCHES

PUSH SWITCH IN DIRECTION SHOWN

V114 JUMPERS INSTALLED

J1, J2, J4, J5, J9
J19, J15, J21

ALL OTHER JUMPERS OUT

-3	-2	-1	REF DESIGNATOR	ITEM NO.	DESCRIPTION	MAT'L DWG NO./BNL NO.
QTY REQD						

INTERPRET IN GENERAL ACCORDANCE WITH ASME Y14.24M-1989

UNLESS OTHERWISE SPECIFIED DIMENSIONS ARE IN INCHES

DECIMAL TOLERANCES
.X ±.030
.XX ±.015
.XXX ±.005
ANGULAR TOLERANCE
± .5°

NA FINISH — BREAK SHARP EDGES MAX. XX MIN. XX

OUTSTANDING ECN

Q.A. CATEGORY A-3		DATE
DRAWN BY	Ed Koropsak	3/5/98
CHECKED BY		
DESIGN APPROVAL		
ENGINEER APPROVAL	R. MICHNOFF	3/5/98
SUPVR. APPROVAL		

NEXT ASSEMBLY

BROOKHAVEN NATIONAL LABORATORY
UPTON, N.Y. 11973

RHIC CONTROLS WIRING DIAGRAM
ALCOVE 1007C, VME CHASSIS CFE-7C-PS1
MADC SYSTEM

SIZE D — DRAWING NUMBER 94028624 — REV. A

MATERIAL: ——— SCALE: NA WEIGHT: – SHEET 12 OF 52

*AUTOCAD

REV.	ZONE	ECN NO.	DATE	BY	CKR	APP.

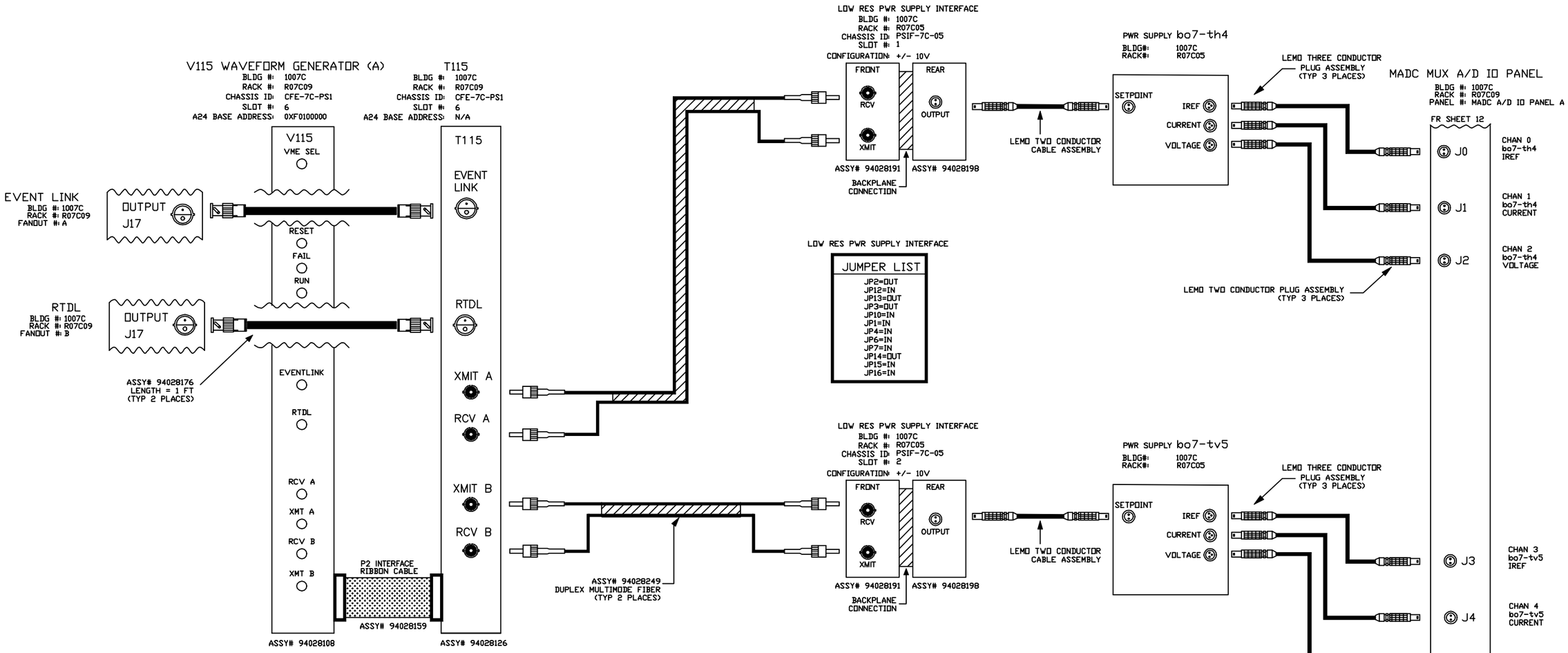

V115 JUMPER LIST
JP3=IN JP4=IN JP1=OUT JP2=OUT
A24 BASE ADDRESS JB1-A23=IN JB1-A22=IN JB1-A21=IN JB1-A20=OUT JB1-A19=IN JB1-A18=IN

-3	-2	-1	REF DESIGNATOR	ITEM NO.	DESCRIPTION	MAT'L DWG NO./BNL NO.
QTY REQD						

INTERPRET IN GENERAL ACCORDANCE WITH ASME Y14.24M-1989

UNLESS OTHERWISE SPECIFIED DIMENSIONS ARE IN INCHES

DECIMAL TOLERANCES
.X ±.030
.XX ±.015
.XXX ±.005
ANGULAR TOLERANCE
± .5°

OUTSTANDING ECN

NA FINISH

BREAK SHARP EDGES
MAX. XX MIN. XX

Q.A. CATEGORY A-3		DATE
DRAWN BY	Ed Koropsak	3/5/98
CHECKED BY		
DESIGN APPROVAL		
ENGINEER APPROVAL	R. MICHNOFF	3/5/98
SUPVR. APPROVAL		

NEXT ASSEMBLY

BROOKHAVEN NATIONAL LABORATORY
UPTON, N.Y. 11973

RHIC CONTROLS WIRING DIAGRAM
ALCOVE 1007C, CFE-7C-PS1

POWER SUPPLY bo7-th4/bo7-tv5

SIZE D | DRAWING NUMBER 94028624 | REV. A

MATERIAL: ——— SCALE: NA WEIGHT: – SHEET 13 OF 53

1 *AUTOCAD

REV.	ZONE	ECN NO.	DATE	BY	CKR	APP.

CONTROLS- 2/28/01 1:39 PM 8624_14.dwg

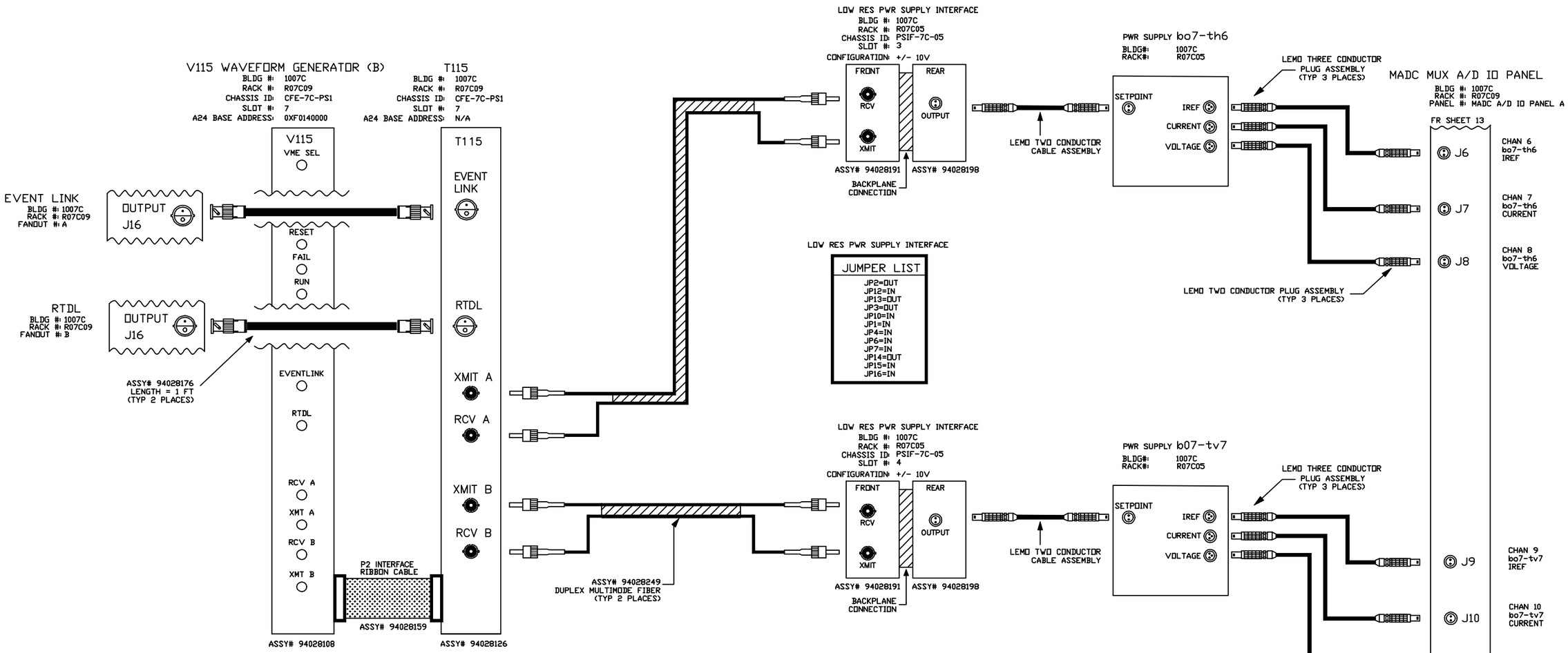

V115 JUMPER LIST
JP3=IN JP4=IN JP1=OUT JP2=OUT
A24 BASE ADDRESS JB1-A23=IN JB1-A22=IN JB1-A21=IN JB1-A20=OUT JB1-A19=IN JB1-A18=OUT

-3	-2	-1	REF DESIGNATOR	ITEM NO.	DESCRIPTION	MAT'L DWG NO./BNL NO.
QTY REQD						

INTERPRET IN GENERAL ACCORDANCE WITH ASME Y14.24M-1989

UNLESS OTHERWISE SPECIFIED DIMENSIONS ARE IN INCHES

DECIMAL TOLERANCES
.X ±.030
.XX ±.015
.XXX ±.005
ANGULAR TOLERANCE
± .5°

OUTSTANDING ECN

NA FINISH

BREAK SHARP EDGES
MAX. XX MIN. XX

Q.A. CATEGORY A-3		DATE
DRAWN BY	Ed Koropsak	3/5/98
CHECKED BY		
DESIGN APPROVAL		
ENGINEER APPROVAL	R. MICHNOFF	3/5/98
SUPVR. APPROVAL		

NEXT ASSEMBLY

BROOKHAVEN NATIONAL LABORATORY
UPTON, N.Y. 11973

RHIC CONTROLS WIRING DIAGRAM
ALCOVE 1007C, CFE-7C-PS1

POWER SUPPLY bo7-th6/bo7-tv7

SIZE D | DRAWING NUMBER 94028624 | REV. A

MATERIAL: ——— SCALE: NA WEIGHT: – SHEET 14 OF 53

*AUTOCAD

REV.	ZONE	ECN NO.	DATE	BY	CKR	APP.

CONTROLS- 5/30/03 2:25 PM 8624_15.dwg

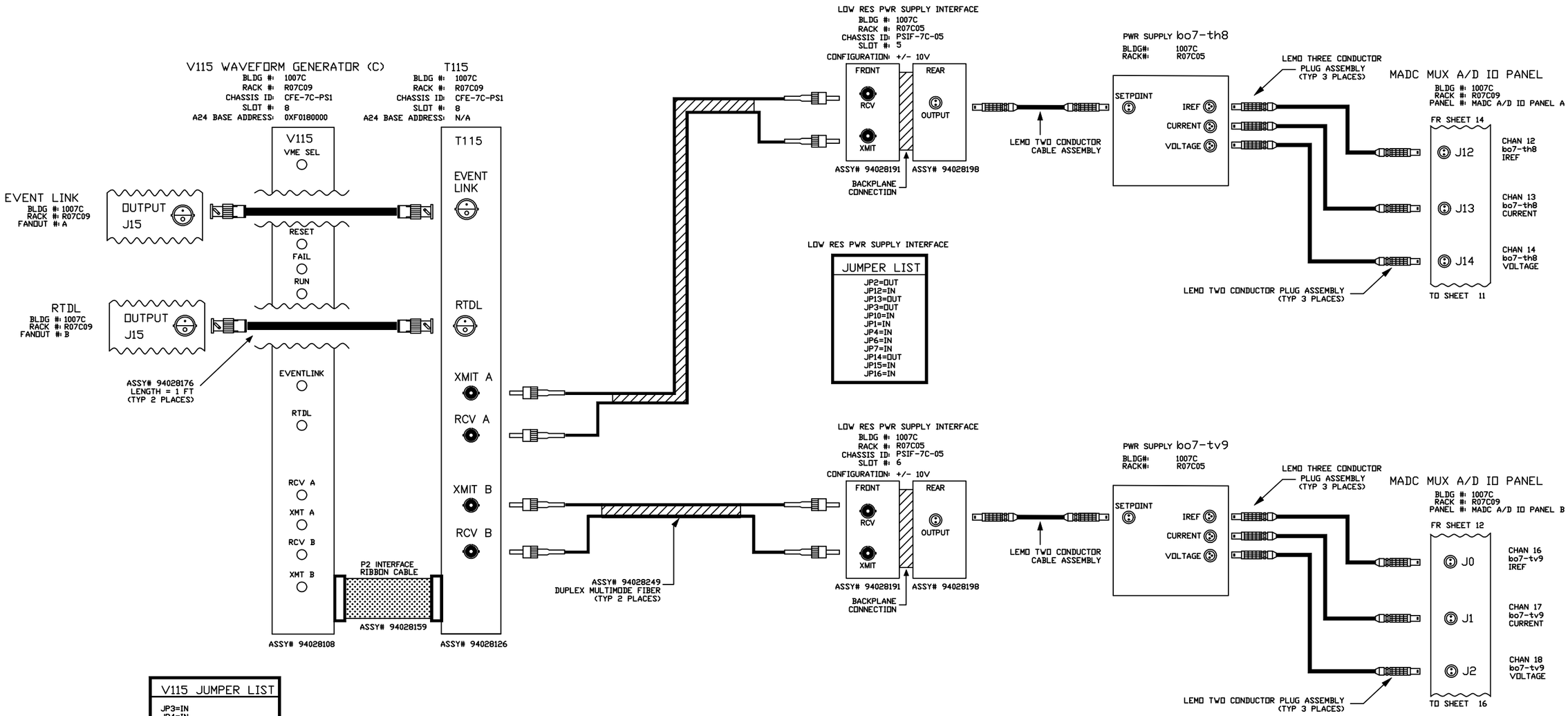

V115 JUMPER LIST
JP3=IN JP4=IN JP1=OUT JP2=OUT
A24 BASE ADDRESS JB1-A23=IN JB1-A22=IN JB1-A21=IN JB1-A20=OUT JB1-A19=OUT JB1-A18=IN

-3	-2	-1	REF DESIGNATOR	ITEM NO.	DESCRIPTION	MAT'L DWG NO./INL NO.
QTY REQD						

INTERPRET IN GENERAL ACCORDANCE WITH ASME Y14.24M-1989

UNLESS OTHERWISE SPECIFIED DIMENSIONS ARE IN INCHES

DECIMAL TOLERANCES
.X ±.030
.XX ±.015
.XXX ±.005
ANGULAR TOLERANCE
± .5°

NA FINISH

BREAK SHARP EDGES
MAX. XX MIN. XX

OUTSTANDING ECN

Q.A. CATEGORY A-3

		DATE
DRAWN BY	Ed Koropsak	3/5/98
CHECKED BY		
DESIGN APPROVAL		
ENGINEER APPROVAL	R. MICHNOFF	3/5/98
SUPVR. APPROVAL		

NEXT ASSEMBLY

BROOKHAVEN NATIONAL LABORATORY
UPTON, N.Y. 11973

RHIC CONTROLS WIRING DIAGRAM
ALCOVE 1007C, CFE-7C-PS1

POWER SUPPLY bo7-th8/bo7-tv9

SIZE D
DRAWING NUMBER 94028624
REV. A

MATERIAL: ——— SCALE: NA WEIGHT: – SHEET 15

*AUTOCAD

REV.	ZONE	ECN NO.	DATE	BY	CKR	APP.

CONTROLS- 2/28/01 1:43 PM 8624_16.dwg

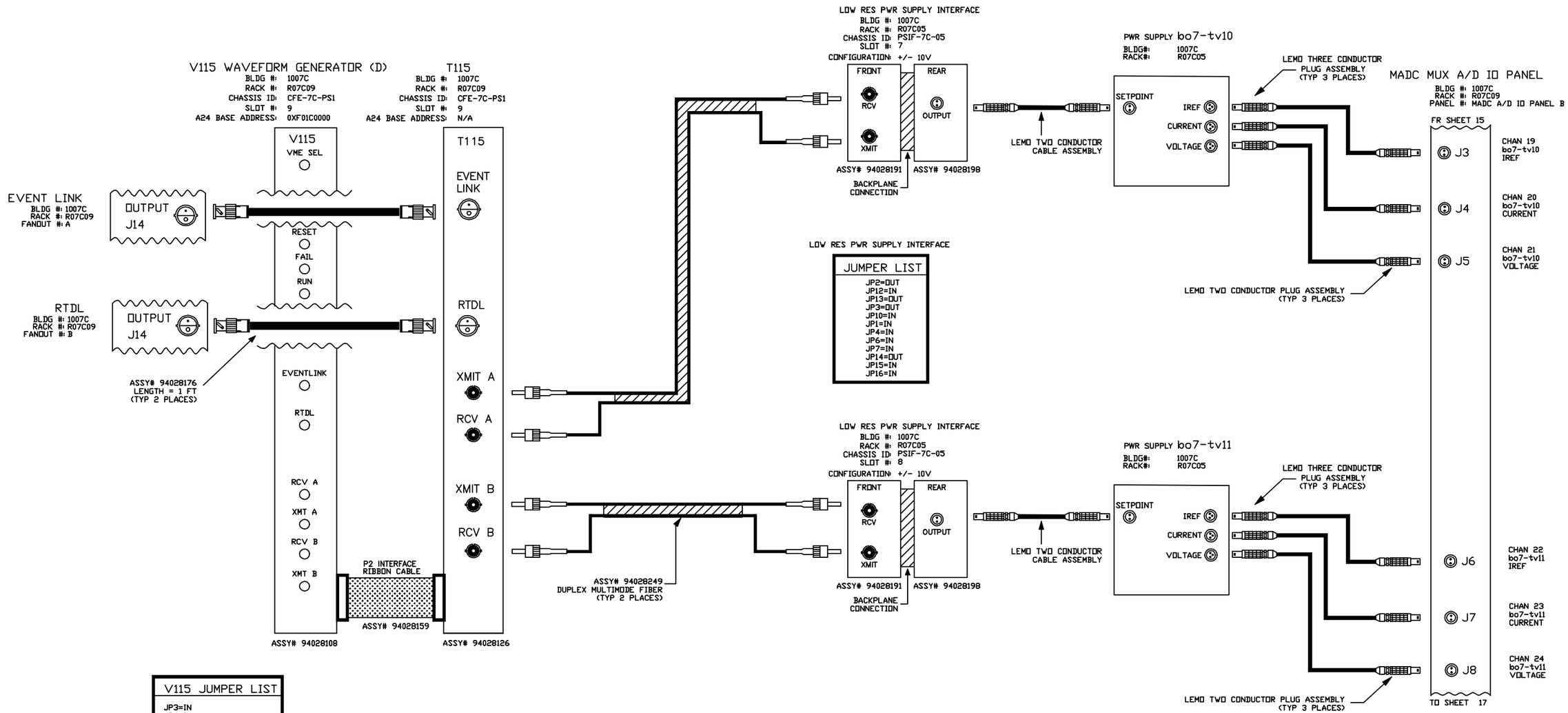

V115 JUMPER LIST
JP3=IN JP4=IN JP1=OUT JP2=OUT
A24 BASE ADDRESS JB1-A23=IN JB1-A22=IN JB1-A21=IN JB1-A20=OUT JB1-A19=OUT JB1-A18=OUT

-3	-2	-1	REF DESIGNATOR	ITEM NO.	DESCRIPTION	MAT'L DWG NO./BNL NO.
QTY REQD						

INTERPRET IN GENERAL ACCORDANCE WITH ASME Y14.24M-1989

UNLESS OTHERWISE SPECIFIED DIMENSIONS ARE IN INCHES

DECIMAL TOLERANCES
.X ±.030
.XX ±.015
.XXX ±.005
ANGULAR TOLERANCE
± .5°

OUTSTANDING ECN

NA FINISH

BREAK SHARP EDGES
MAX. XX MIN. XX

Q.A. CATEGORY A-3		DATE
DRAWN BY	Ed Koropsak	3/5/98
CHECKED BY		
DESIGN APPROVAL		
ENGINEER APPROVAL	R. MICHNOFF	3/5/98
SUPVR. APPROVAL		

NEXT ASSEMBLY

BROOKHAVEN NATIONAL LABORATORY
UPTON, N.Y. 11973

RHIC CONTROLS WIRING DIAGRAM
ALCOVE 1007C, CFE-7C-PS1
POWER SUPPLY bo7-th10/bo7-tv11

SIZE D
DRAWING NUMBER 94028624
REV. A

MATERIAL: ——— SCALE: NA WEIGHT: – SHEET 16 OF 53

*AUTOCAD

REV.	ZONE	ECN NO.	DATE	BY	CKR	APP.

CONTROLS- 6/17/03 1:15 PM 8624_17.dwg

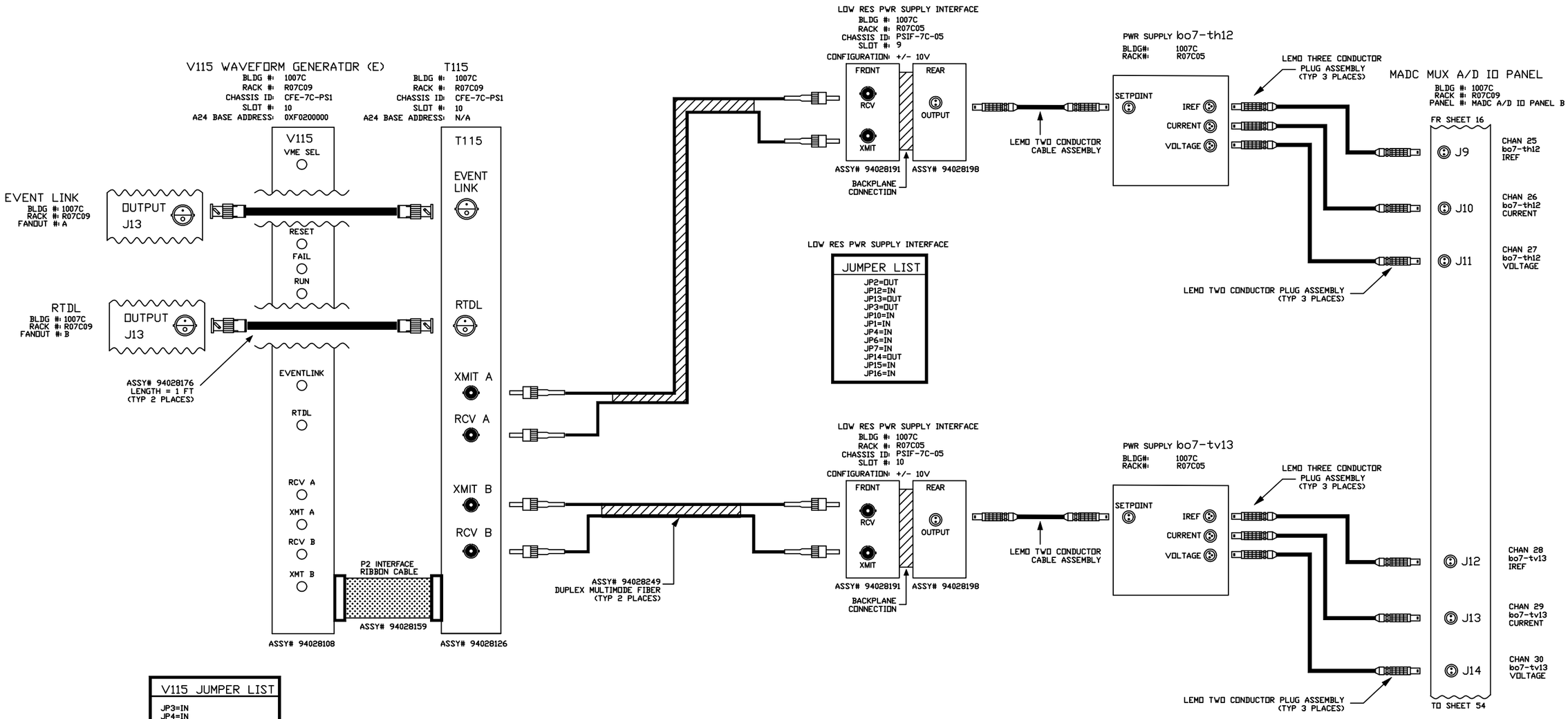

V115 JUMPER LIST
JP3=IN JP4=IN JP1=OUT JP2=OUT
A24 BASE ADDRESS JB1-A23=IN JB1-A22=IN JB1-A21=OUT JB1-A20=IN JB1-A19=IN JB1-A18=IN

-3	-2	-1	REF DESIGNATOR	ITEM NO.	DESCRIPTION	MAT'L DWG NO./INL NO.
QTY REQD						

INTERPRET IN GENERAL ACCORDANCE WITH ASME Y14.24M-1989	Q.A. CATEGORY A-3	DATE	BROOKHAVEN NATIONAL LABORATORY
	DRAWN BY Ed Koropsak	3/5/98	UPTON, N.Y. 11973
UNLESS OTHERWISE SPECIFIED DIMENSIONS ARE IN INCHES	CHECKED BY		RHIC CONTROLS WIRING DIAGRAM
DECIMAL TOLERANCES .X ±.030 .XX ±.015 .XXX ±.005 ANGULAR TOLERANCE ± .5°	DESIGN APPROVAL		ALCOVE 1007C, CFE-7C-PS1
	ENGINEER APPROVAL R. MICHNOFF	3/5/98	POWER SUPPLY bo7-th12/bo7-tv13
	SUPVR. APPROVAL		SIZE D / 94028624 / REV. A
NA FINISH / BREAK SHARP EDGES MAX. XX MIN. XX	NEXT ASSEMBLY		DRAWING NUMBER
OUTSTANDING ECN			MATERIAL: ——— SCALE: NA WEIGHT: – SHEET 17

*AUTOCAD

REV.	ZONE	ECN NO.	DATE	BY	CKR	APP.

CONTROLS- 6/17/03 1:22 PM 8624_18.dwg

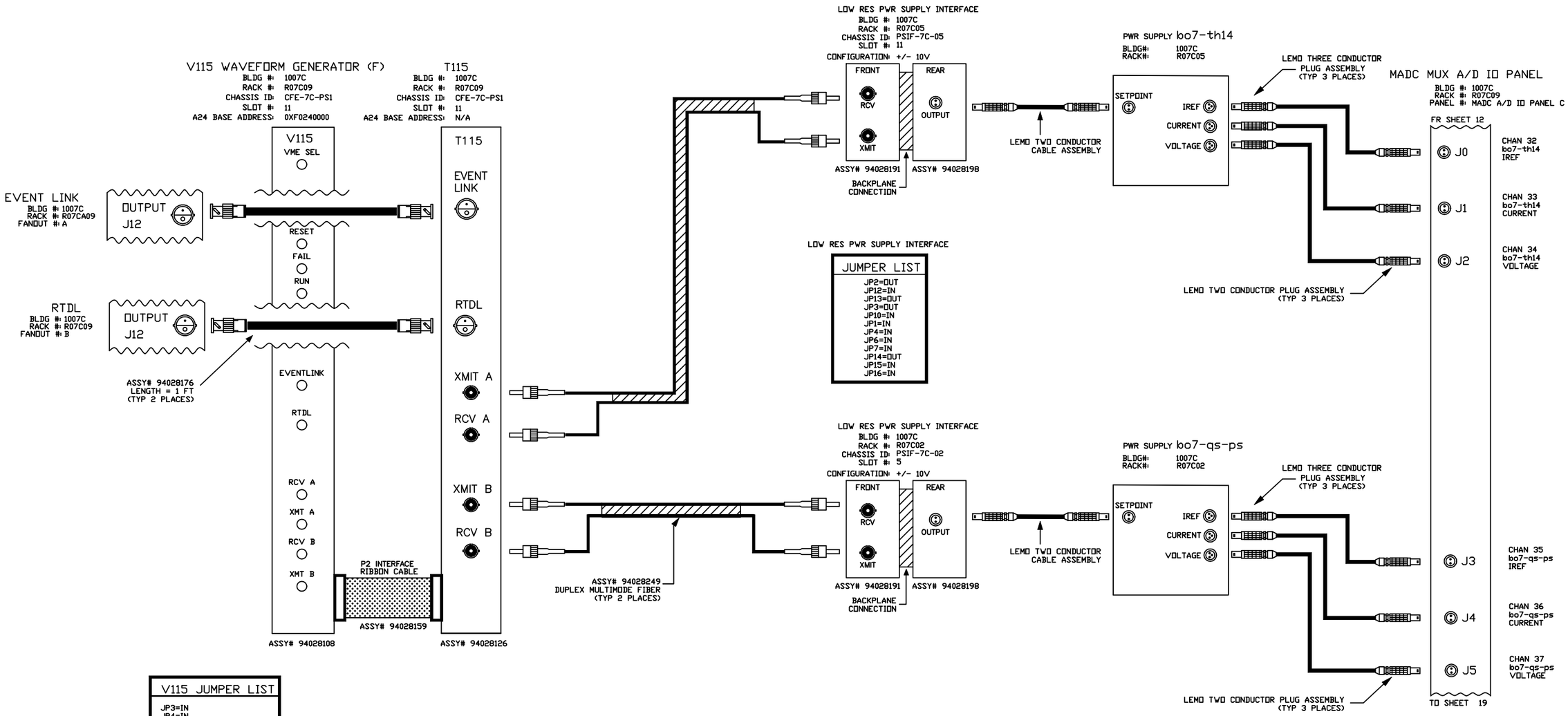

V115 JUMPER LIST
JP3=IN JP4=IN JP1=OUT JP2=OUT
A24 BASE ADDRESS JB1-A23=IN JB1-A22=IN JB1-A21=OUT JB1-A20=IN JB1-A19=IN JB1-A18=OUT

-3	-2	-1	REF DESIGNATOR	ITEM NO.	DESCRIPTION	MAT'L DWG NO./INL NO.
QTY REQD						

INTERPRET IN GENERAL ACCORDANCE WITH ASME Y14.24M-1989	Q.A. CATEGORY A-3	DATE	BROOKHAVEN NATIONAL LABORATORY
	DRAWN BY Ed Koropsak	3/5/98	UPTON, N.Y. 11973
UNLESS OTHERWISE SPECIFIED DIMENSIONS ARE IN INCHES	CHECKED BY		RHIC CONTROLS WIRING DIAGRAM
DECIMAL TOLERANCES .X ±.030 .XX ±.015 .XXX ±.005 ANGULAR TOLERANCE ± .5°	DESIGN APPROVAL		ALCOVE 1007C, CFE-7C-PS1
	ENGINEER APPROVAL R. MICHNOFF	3/5/98	PWR SUPPLY bo7-th14/bo7-qs-ps
	SUPVR. APPROVAL		SIZE D — DRAWING NUMBER 94028624 — REV. A
NA FINISH — BREAK SHARP EDGES MAX. XX MIN. XX	NEXT ASSEMBLY		MATERIAL: — SCALE: NA WEIGHT: – SHEET 18
OUTSTANDING ECN			

1 *AUTOCAD

REV.	ZONE	ECN NO.	DATE	BY	CKR	APP.

CONTROLS- 2/28/01 1:50 PM 8624_19.dwg

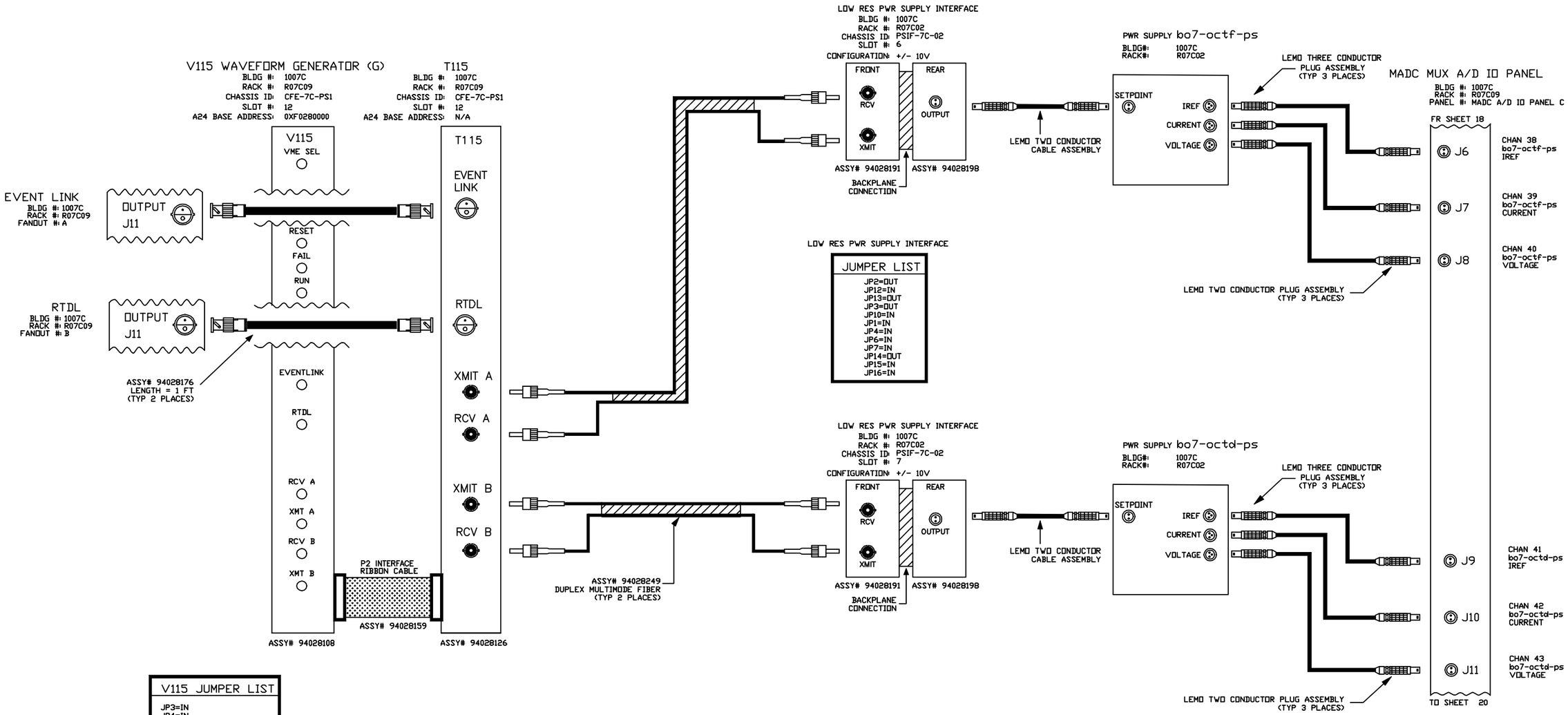

JUMPER LIST
JP2=OUT
JP12=IN
JP13=OUT
JP3=OUT
JP10=IN
JP1=IN
JP4=IN
JP6=IN
JP7=IN
JP14=OUT
JP15=IN
JP16=IN

V115 JUMPER LIST
JP3=IN JP4=IN JP1=OUT JP2=OUT
A24 BASE ADDRESS JB1-A23=IN JB1-A22=IN JB1-A21=OUT JB1-A20=IN JB1-A19=OUT JB1-A18=IN

-3	-2	-1	REF DESIGNATOR	ITEM NO.	DESCRIPTION	MAT'L DWG NO./BNL NO.
QTY REQD						

INTERPRET IN GENERAL ACCORDANCE WITH ASME Y14.24M-1989

UNLESS OTHERWISE SPECIFIED DIMENSIONS ARE IN INCHES

DECIMAL TOLERANCES
.X ±.030
.XX ±.015
.XXX ±.005
ANGULAR TOLERANCE ± .5°

OUTSTANDING ECN

NA FINISH

BREAK SHARP EDGES MAX. XX MIN. XX

Q.A. CATEGORY A-3		DATE
DRAWN BY	Ed Koropsak	3/5/98
CHECKED BY		
DESIGN APPROVAL		
ENGINEER APPROVAL	R. MICHNOFF	3/5/98
SUPVR. APPROVAL		

NEXT ASSEMBLY

BROOKHAVEN NATIONAL LABORATORY
UPTON, N.Y. 11973

RHIC CONTROLS WIRING DIAGRAM
ALCOVE 1007C, CFE-7C-PS1
P S bo7-octf-ps/bo7-octd-ps

SIZE D | DRAWING NUMBER 94028624 | REV. A

MATERIAL: ——— SCALE: NA WEIGHT: – SHEET 19 OF 53

1 *AUTOCAD

REV.	ZONE	ECN NO.	DATE	BY	CKR	APP.

CONTROLS- 2/28/01 1:51 PM 8624_20.dwg

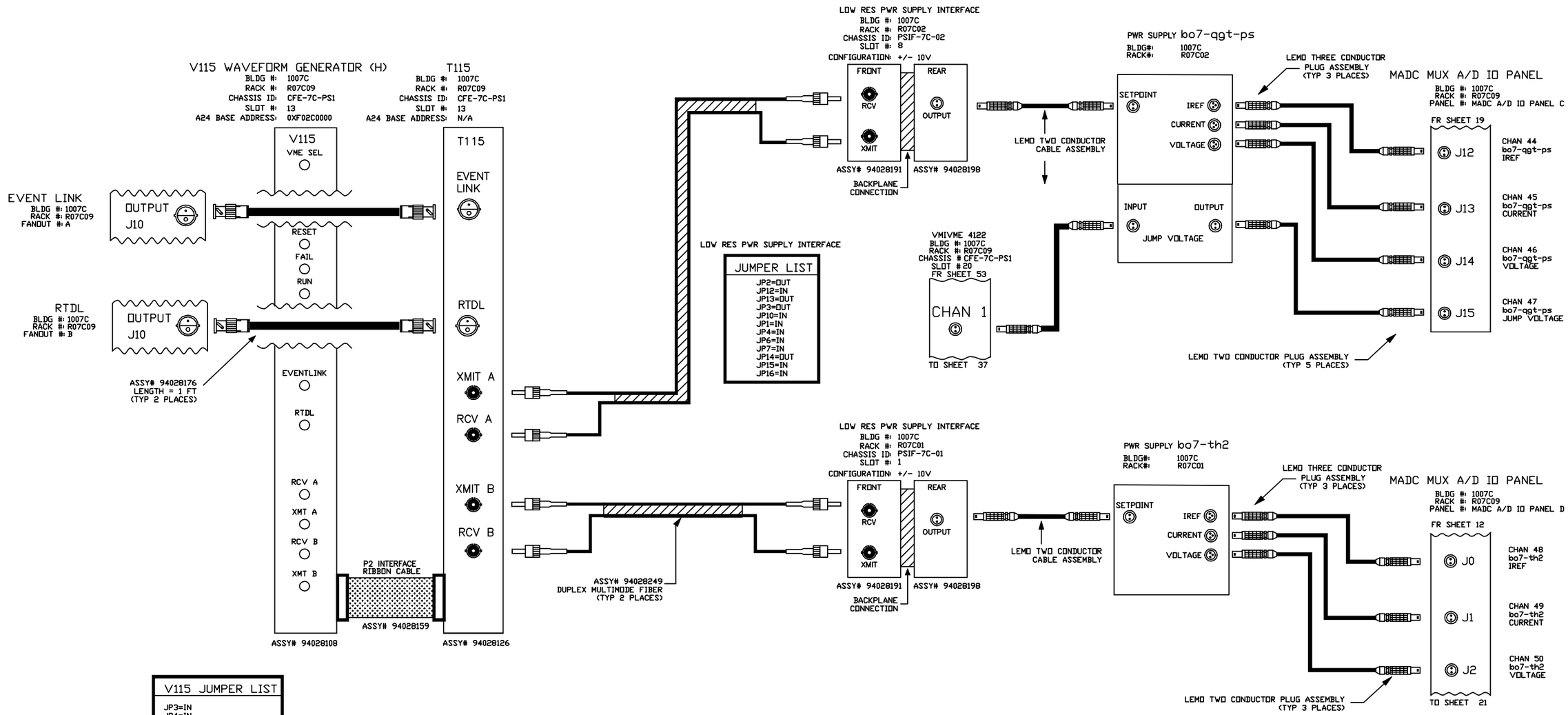

V115 JUMPER LIST
JP3=IN JP4=IN JP1=OUT JP2=OUT
A24 BASE ADDRESS JB1-A23=IN JB1-A22=IN JB1-A21=OUT JB1-A20=IN JB1-A19=OUT JB1-A18=OUT

-3	-2	-1	REF DESIGNATOR	ITEM NO.	DESCRIPTION	MAT'L DWG NO./BNL NO.
QTY REQD						

INTERPRET IN GENERAL ACCORDANCE WITH ASME Y14.24M-1989

UNLESS OTHERWISE SPECIFIED DIMENSIONS ARE IN INCHES

DECIMAL TOLERANCES
.X ±.030
.XX ±.015
.XXX ±.005
ANGULAR TOLERANCE
± .5°

OUTSTANDING ECN

NA FINISH

BREAK SHARP EDGES
MAX. XX MIN. XX

Q.A. CATEGORY A-3		DATE
DRAWN BY	Ed Koropsak	3/5/98
CHECKED BY		
DESIGN APPROVAL		
ENGINEER APPROVAL	R. MICHNOFF	3/5/98
SUPVR. APPROVAL		

NEXT ASSEMBLY

BROOKHAVEN NATIONAL LABORATORY
UPTON, N.Y. 11973

RHIC CONTROLS WIRING DIAGRAM
ALCOVE 1007C, CFE-7C-PS1
PWR SPLY bo7-qgt-ps/bo7-th2

SIZE D
DRAWING NUMBER 94028624
REV. A

MATERIAL: ——— SCALE: NA WEIGHT: – SHEET 20 OF 53

1 *AUTOCAD

REV.	ZONE	ECN NO.	DATE	BY	CKR	APP.

CONTROLS- 6/17/03 1:24 PM 8624_21.dwg

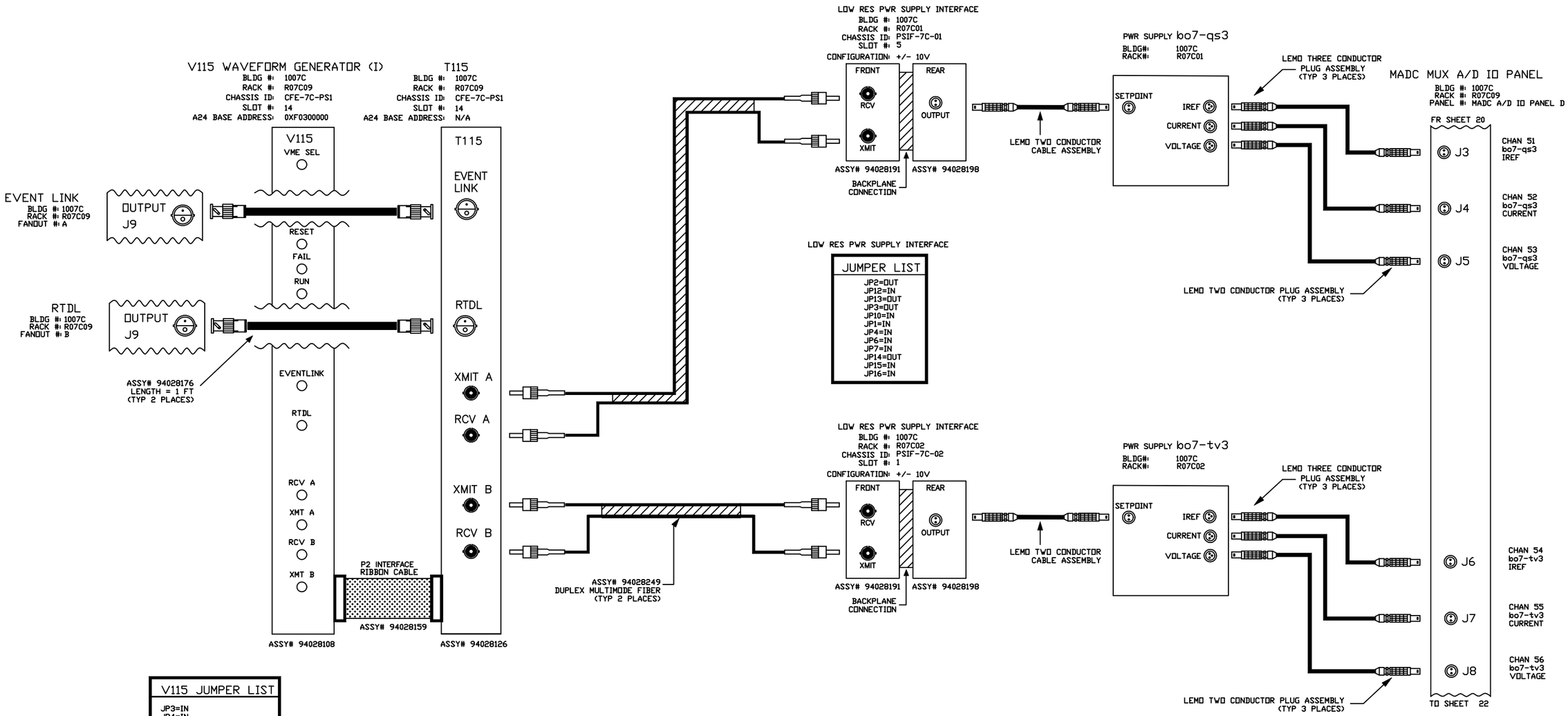

V115 JUMPER LIST
JP3=IN JP4=IN JP1=OUT JP2=OUT
A24 BASE ADDRESS JB1-A23=IN JB1-A22=IN JB1-A21=OUT JB1-A20=OUT JB1-A19=IN JB1-A18=IN

-3	-2	-1	REF DESIGNATOR	ITEM NO.	DESCRIPTION	MAT'L DWG NO./INL NO.
QTY REQD						

INTERPRET IN GENERAL ACCORDANCE WITH ASME Y14.24M-1989	Q.A. CATEGORY A-3	DATE	BROOKHAVEN NATIONAL LABORATORY
	DRAWN BY Ed Koropsak	3/5/98	UPTON, N.Y. 11973
UNLESS OTHERWISE SPECIFIED DIMENSIONS ARE IN INCHES	CHECKED BY		RHIC CONTROLS WIRING DIAGRAM
DECIMAL TOLERANCES .X ±.030 .XX ±.015 .XXX ±.005 ANGULAR TOLERANCE ± .5°	DESIGN APPROVAL		ALCOVE 1007C, CFE-7C-PS1
	ENGINEER APPROVAL R. MICHNOFF	3/5/98	POWER SUPPLY bo7-qs3/bo7-tv3
	SUPVR. APPROVAL		SIZE D / 94028624 / REV. A
NA FINISH / BREAK SHARP EDGES MAX. XX MIN. XX	NEXT ASSEMBLY		DRAWING NUMBER
OUTSTANDING ECN			MATERIAL: ——— SCALE: NA WEIGHT: – SHEET 21

1 *AUTOCAD

REV.	ZONE	ECN NO.	DATE	BY	CKR	APP.

CONTROLS- 6/17/03 1:26 PM 8624_22.dwg

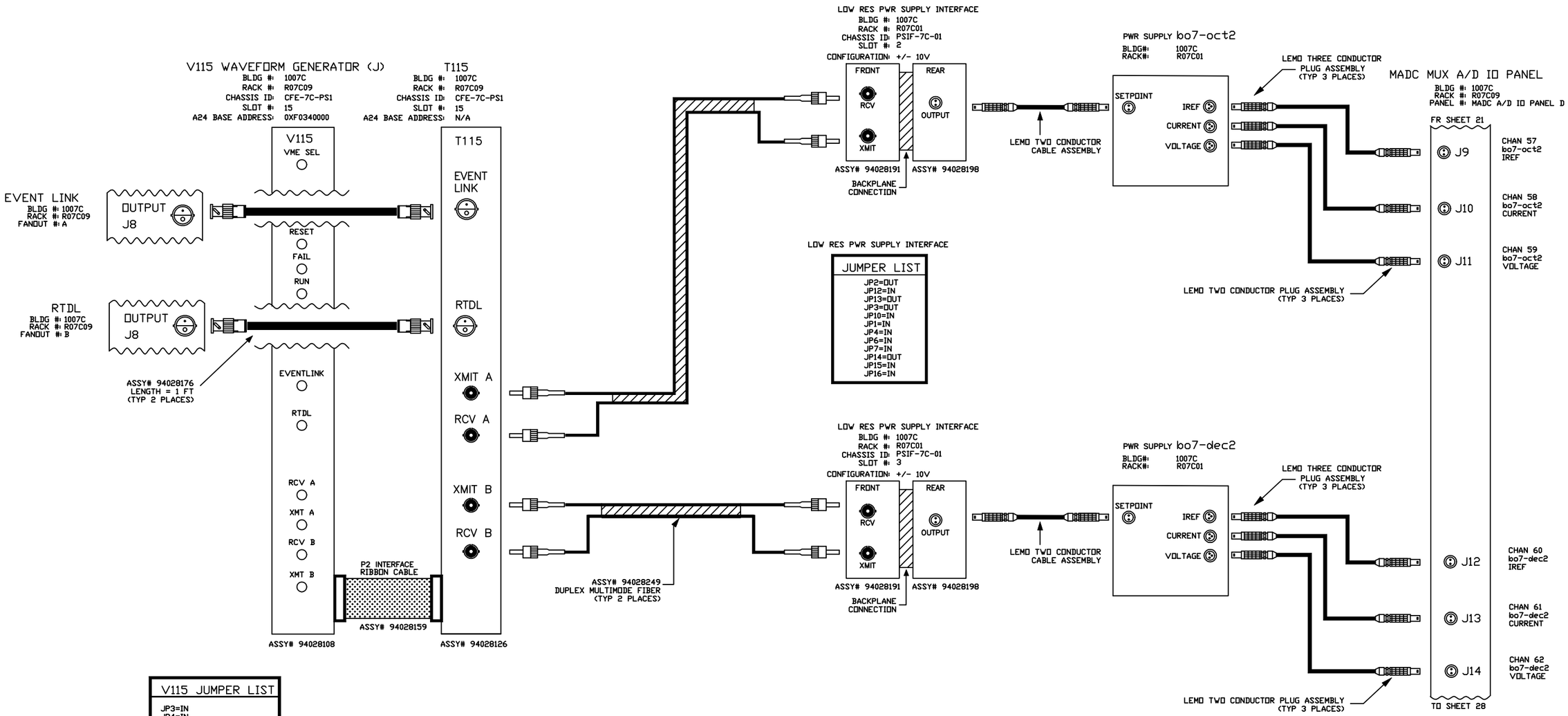

V115 JUMPER LIST
JP3=IN JP4=IN JP1=OUT JP2=OUT
A24 BASE ADDRESS JB1-A23=IN JB1-A22=IN JB1-A21=OUT JB1-A20=OUT JB1-A19=IN JB1-A18=OUT

-3	-2	-1	REF DESIGNATOR	ITEM NO.	DESCRIPTION	MAT'L DWG NO.,BNL NO.
QTY REQD						

INTERPRET IN GENERAL ACCORDANCE WITH ASME Y14.24M-1989

UNLESS OTHERWISE SPECIFIED DIMENSIONS ARE IN INCHES

DECIMAL TOLERANCES
.X ±.030
.XX ±.015
.XXX ±.005
ANGULAR TOLERANCE
± .5°

NA FINISH

BREAK SHARP EDGES
MAX. XX MIN. XX

OUTSTANDING ECN

Q.A. CATEGORY A-3

		DATE
DRAWN BY	Ed Koropsak	3/5/98
CHECKED BY		
DESIGN APPROVAL		
ENGINEER APPROVAL	R. MICHNOFF	3/5/98
SUPVR. APPROVAL		

NEXT ASSEMBLY

BROOKHAVEN NATIONAL LABORATORY
UPTON, N.Y. 11973

RHIC CONTROLS WIRING DIAGRAM
ALCOVE 1007C, CFE-7C-PS1
POWER SUPPLY bo7-oct2/bo7-dec2

SIZE D
DRAWING NUMBER 94028624
REV. A

MATERIAL: ——— SCALE: NA WEIGHT: – SHEET 22

*AUTOCAD

REV.	ZONE	ECN NO.	DATE	BY	CKR	APP.

CONTROLS- 2/28/01 1:57 PM 8624_23.dwg

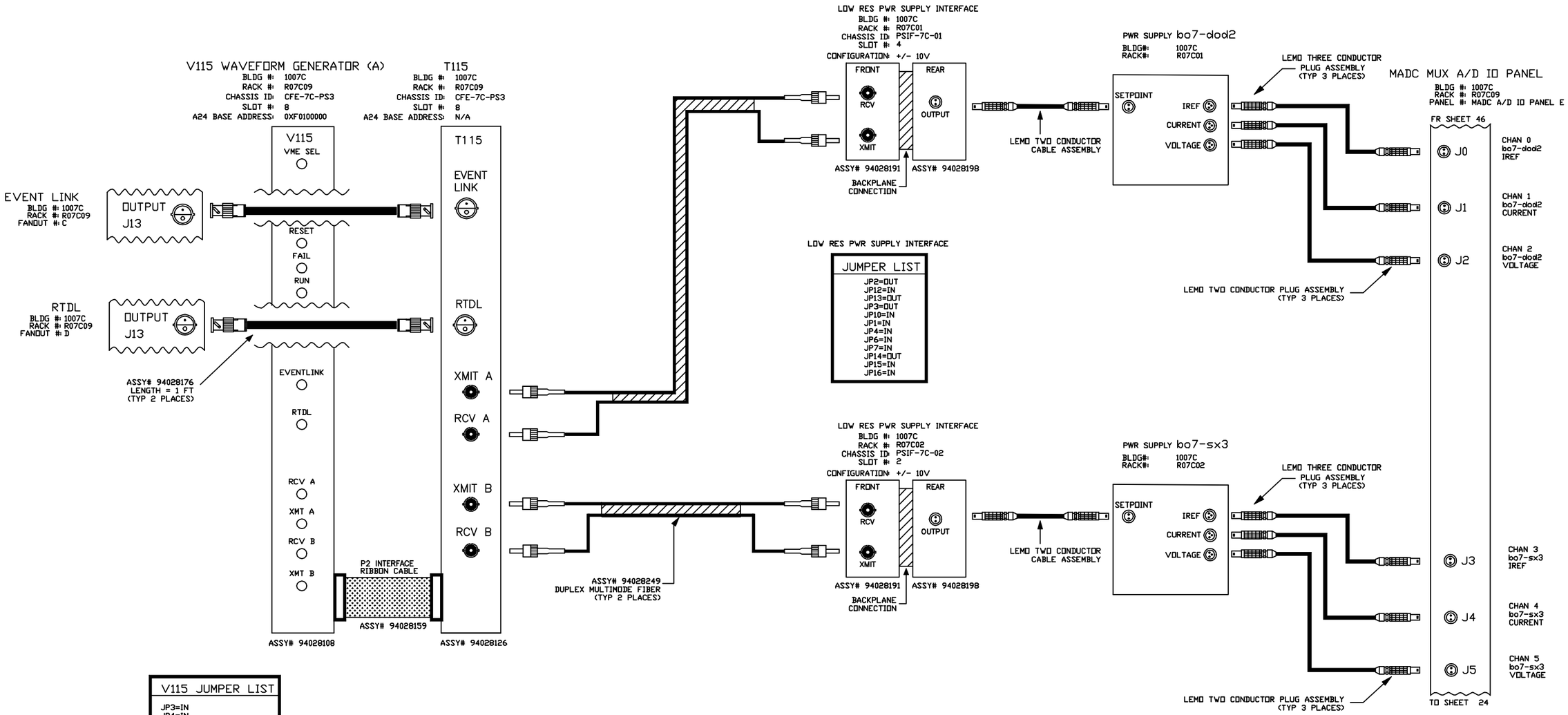

V115 JUMPER LIST
JP3=IN JP4=IN JP1=OUT JP2=OUT
A24 BASE ADDRESS JB1-A23=IN JB1-A22=IN JB1-A21=IN JB1-A20=OUT JB1-A19=IN JB1-A18=IN

-3	-2	-1	REF DESIGNATOR	ITEM NO.	DESCRIPTION	MAT'L DWG NO./BNL NO.
QTY REQD						

INTERPRET IN GENERAL ACCORDANCE WITH ASME Y14.24M-1989

UNLESS OTHERWISE SPECIFIED DIMENSIONS ARE IN INCHES

DECIMAL TOLERANCES
.X ±.030
.XX ±.015
.XXX ±.005
ANGULAR TOLERANCE
± .5°

NA FINISH

BREAK SHARP EDGES
MAX. XX MIN. XX

OUTSTANDING ECN

Q.A. CATEGORY A-3		DATE
DRAWN BY	Ed Koropsak	3/5/98
CHECKED BY		
DESIGN APPROVAL		
ENGINEER APPROVAL	R. MICHNOFF	3/5/98
SUPVR. APPROVAL		

NEXT ASSEMBLY

BROOKHAVEN NATIONAL LABORATORY
UPTON, N.Y. 11973

RHIC CONTROLS WIRING DIAGRAM
ALCOVE 1007C, CFE-7C-PS3
POWER SUPPLY bo7-dod2/bo7-sx3

SIZE D
DRAWING NUMBER 94028624
REV. A

MATERIAL: ——— SCALE: NA WEIGHT: – SHEET 23 OF 53

*AUTOCAD

REV.	ZONE	ECN NO.	DATE	BY	CKR	APP.

CONTROLS- 2/28/01 2:00 PM 8624_24.dwg

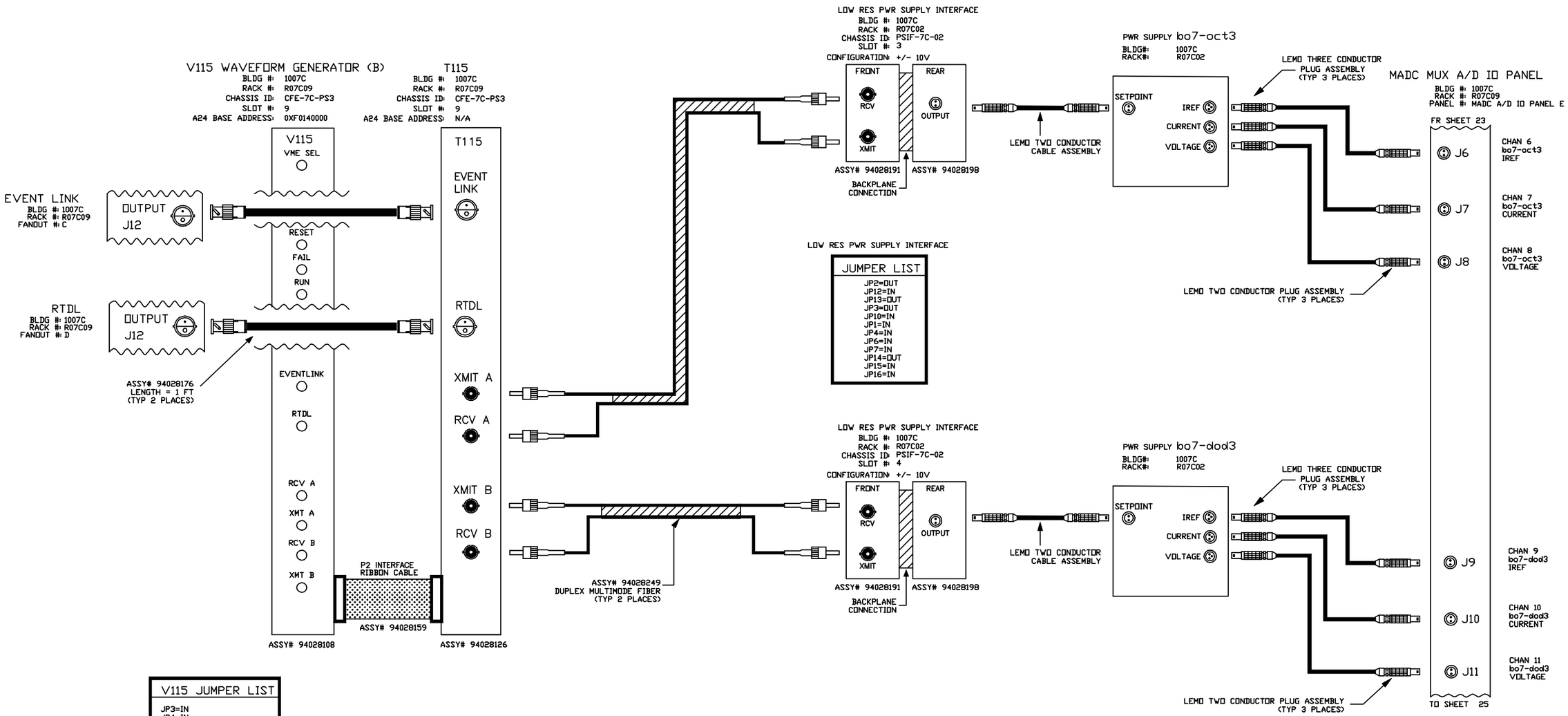

V115 JUMPER LIST
JP3=IN JP4=IN JP1=OUT JP2=OUT
A24 BASE ADDRESS JB1-A23=IN JB1-A22=IN JB1-A21=IN JB1-A20=OUT JB1-A19=IN JB1-A18=OUT

-3	-2	-1	REF DESIGNATOR	ITEM NO.	DESCRIPTION	MAT'L DWG NO./BNL NO.
QTY REQD						

INTERPRET IN GENERAL ACCORDANCE WITH ASME Y14.24M-1989

UNLESS OTHERWISE SPECIFIED DIMENSIONS ARE IN INCHES

DECIMAL TOLERANCES
.X ±.030
.XX ±.015
.XXX ±.005
ANGULAR TOLERANCE
± .5°

OUTSTANDING ECN

NA FINISH

BREAK SHARP EDGES
MAX. XX MIN. XX

Q.A. CATEGORY A-3		DATE
DRAWN BY	Ed Koropsak	3/5/98
CHECKED BY		
DESIGN APPROVAL		
ENGINEER APPROVAL	R. MICHNOFF	3/5/98
SUPVR. APPROVAL		

NEXT ASSEMBLY

BROOKHAVEN NATIONAL LABORATORY
UPTON, N.Y. 11973

RHIC CONTROLS WIRING DIAGRAM
ALCOVE 1007C, CFE-7C-PS3
PWRSPLY bo7-oct3/bo7-dod3

SIZE D
DRAWING NUMBER 94028624
REV. A

MATERIAL: ——— SCALE: NA WEIGHT: – SHEET 24 OF 53

*AUTOCAD

CONTROLS- 6/17/03 1:29 PM 8624_25.dwg

REV.	ZONE	ECN NO.	DATE	BY	CKR	APP.

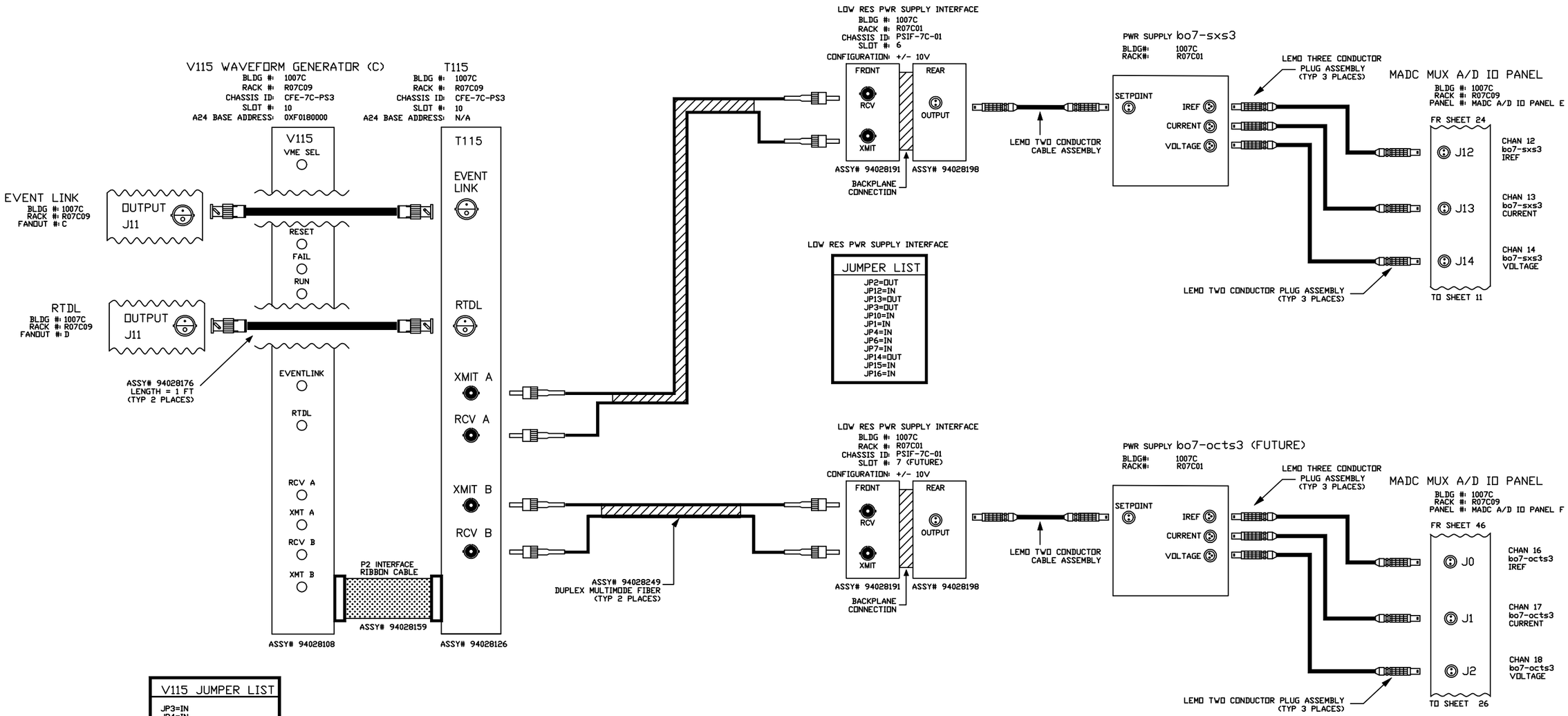

V115 JUMPER LIST
JP3=IN JP4=IN JP1=OUT JP2=OUT
A24 BASE ADDRESS JB1-A23=IN JB1-A22=IN JB1-A21=IN JB1-A20=OUT JB1-A19=OUT JB1-A18=IN

-3	-2	-1	REF DESIGNATOR	ITEM NO.	DESCRIPTION	MAT'L DWG NO./INL NO.
QTY REQD						

INTERPRET IN GENERAL ACCORDANCE WITH ASME Y14.24M-1989

UNLESS OTHERWISE SPECIFIED DIMENSIONS ARE IN INCHES

DECIMAL TOLERANCES
.X ±.030
.XX ±.015
.XXX ±.005
ANGULAR TOLERANCE
± .5°

NA FINISH

BREAK SHARP EDGES
MAX. XX MIN. XX

OUTSTANDING ECN

Q.A. CATEGORY A-3

		DATE
DRAWN BY	Ed Koropsak	3/5/98
CHECKED BY		
DESIGN APPROVAL		
ENGINEER APPROVAL	R. MICHNOFF	3/5/98
SUPVR. APPROVAL		

NEXT ASSEMBLY

BROOKHAVEN NATIONAL LABORATORY
UPTON, N.Y. 11973

RHIC CONTROLS WIRING DIAGRAM
ALCOVE 1007C, CFE-7C-PS3
PWR SPLY bo7-sxs3/bo7-octs3

SIZE D
DRAWING NUMBER 94028624
REV. A

MATERIAL: ——— SCALE: NA WEIGHT: – SHEET 25

*AUTOCAD

REV.	ZONE	ECN NO.	DATE	BY	CKR	APP.

CONTROLS- 6/17/03 1:32 PM 8624_26.dwg

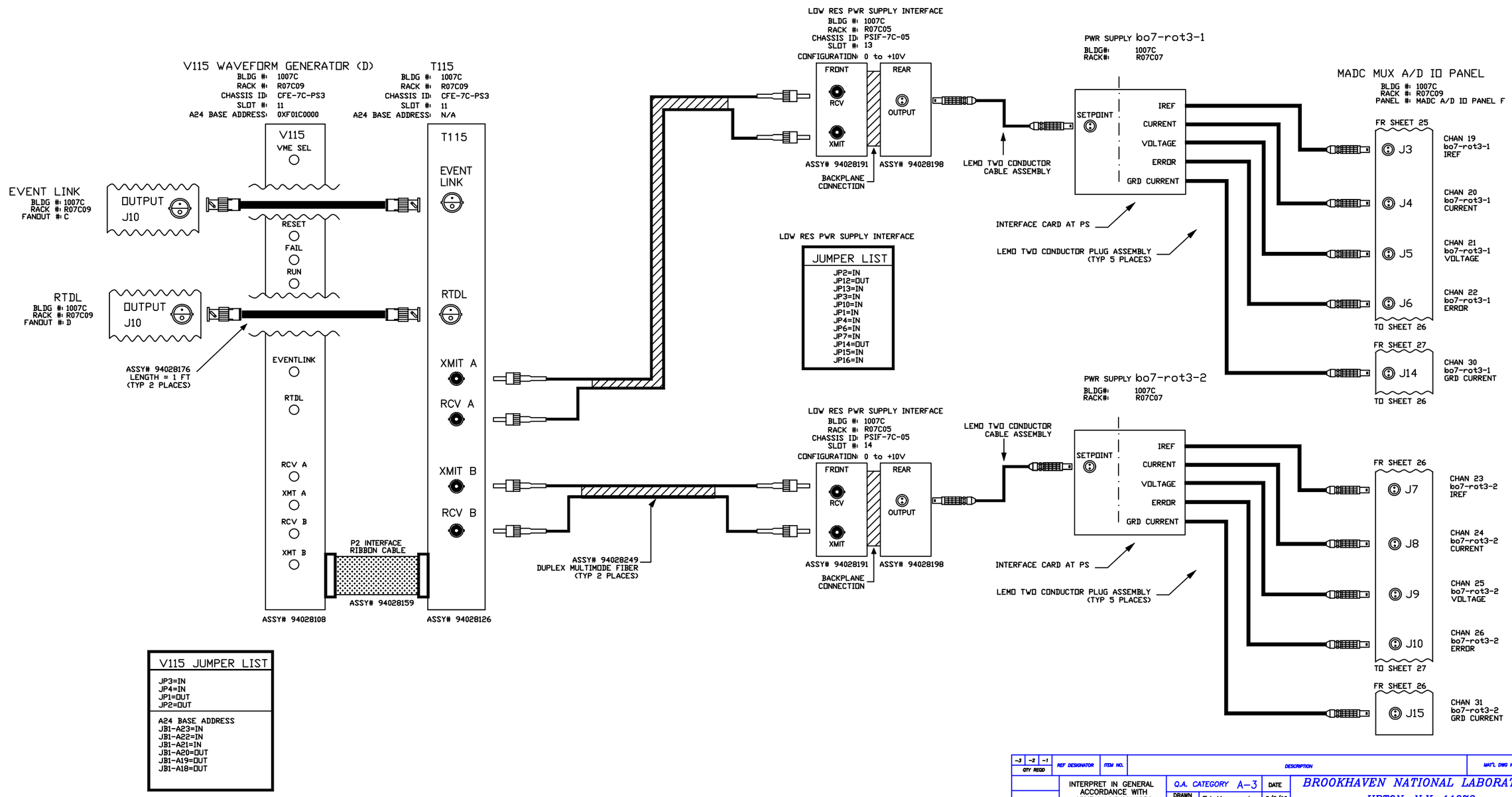

V115 JUMPER LIST
JP3=IN JP4=IN JP1=OUT JP2=OUT
A24 BASE ADDRESS JB1-A23=IN JB1-A22=IN JB1-A21=IN JB1-A20=OUT JB1-A19=OUT JB1-A18=OUT

-3	-2	-1	REF DESIGNATOR	ITEM NO.	DESCRIPTION	MAT'L DWG NO./INL NO.
QTY REQD						

INTERPRET IN GENERAL ACCORDANCE WITH ASME Y14.24M-1989	Q.A. CATEGORY A-3	DATE	BROOKHAVEN NATIONAL LABORATORY UPTON, N.Y. 11973
UNLESS OTHERWISE SPECIFIED DIMENSIONS ARE IN INCHES	DRAWN BY Ed Koropsak	3/5/98	RHIC CONTROLS WIRING DIAGRAM
DECIMAL TOLERANCES .X ±.030 .XX ±.015 .XXX ±.005 ANGULAR TOLERANCE ± .5°	CHECKED BY		ALCOVE 1007C, CFE-7C-PS3
	DESIGN APPROVAL		PWRSPLY bo7-rot3-1/bo7-rot3-2
	ENGINEER APPROVAL R. MICHNOFF	3/5/98	SIZE D — 94028624 — REV. A
NA FINISH	BREAK SHARP EDGES MAX. XX MIN. XX	NEXT ASSEMBLY	DRAWING NUMBER
OUTSTANDING ECN			MATERIAL: ——— SCALE: NA WEIGHT: – SHEET 26

*AUTOCAD

REV.	ZONE	ECN NO.	DATE	BY	CKR	APP.

CONTROLS- 6/2/03 9:17 AM 8624_27.dwg

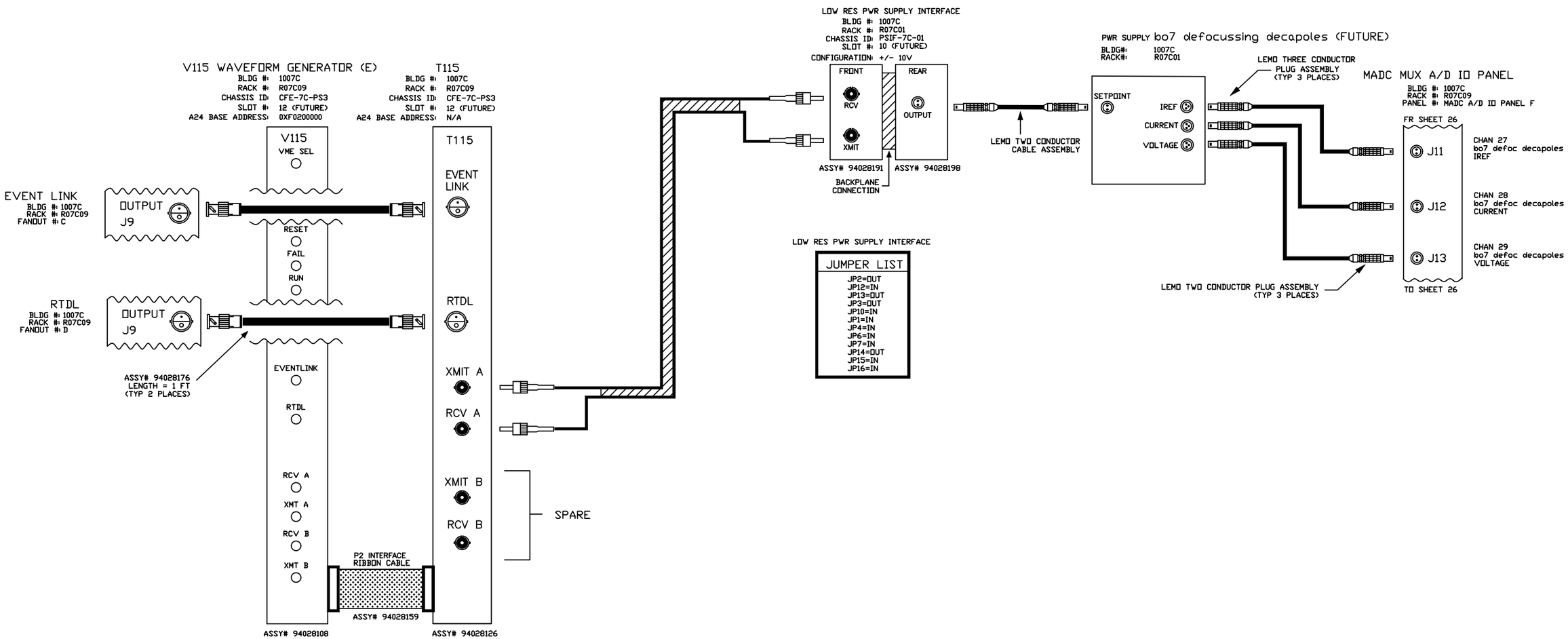

LOW RES PWR SUPPLY INTERFACE

JUMPER LIST
JP2=OUT
JP12=IN
JP13=OUT
JP3=OUT
JP10=IN
JP1=IN
JP4=IN
JP6=IN
JP7=IN
JP14=OUT
JP15=IN
JP16=IN

V115 JUMPER LIST
JP3=IN JP4=IN JP1=OUT JP2=OUT
A24 BASE ADDRESS JB1-A23=IN JB1-A22=IN JB1-A21=OUT JB1-A20=IN JB1-A19=IN JB1-A18=IN

-3	-2	-1	REF DESIGNATOR	ITEM NO.	DESCRIPTION	MAT'L. DWG NO./INL NO.
QTY REQD						

INTERPRET IN GENERAL ACCORDANCE WITH ASME Y14.24M-1989

UNLESS OTHERWISE SPECIFIED DIMENSIONS ARE IN INCHES

DECIMAL TOLERANCES
X ±.030
.XX ±.015
.XXX ±.005
ANGULAR TOLERANCE
± .5°

NA FINISH

BREAK SHARP EDGES
MAX. XX MIN. XX

OUTSTANDING ECN

Q.A. CATEGORY A-3		DATE
DRAWN BY	Ed Koropsak	3/5/98
CHECKED BY		
DESIGN APPROVAL		
ENGINEER APPROVAL	R. MICHNOFF	3/5/98
SUPVR. APPROVAL		

NEXT ASSEMBLY

BROOKHAVEN NATIONAL LABORATORY
UPTON, N.Y. 11973

RHIC CONTROLS WIRING DIAGRAM
ALCOVE 1007C, CFE-7C-PS3
PWR SPLY bo7 defoc decapoles

SIZE D
DRAWING NUMBER 94028624
REV. A

MATERIAL: ——— SCALE: NA WEIGHT: – SHEET 27

*AUTOCAD

REV.	ZONE	ECN NO.	DATE	BY	CKR	APP.

CONTROLS- 6/17/03 1:34 PM 8624_28.dwg

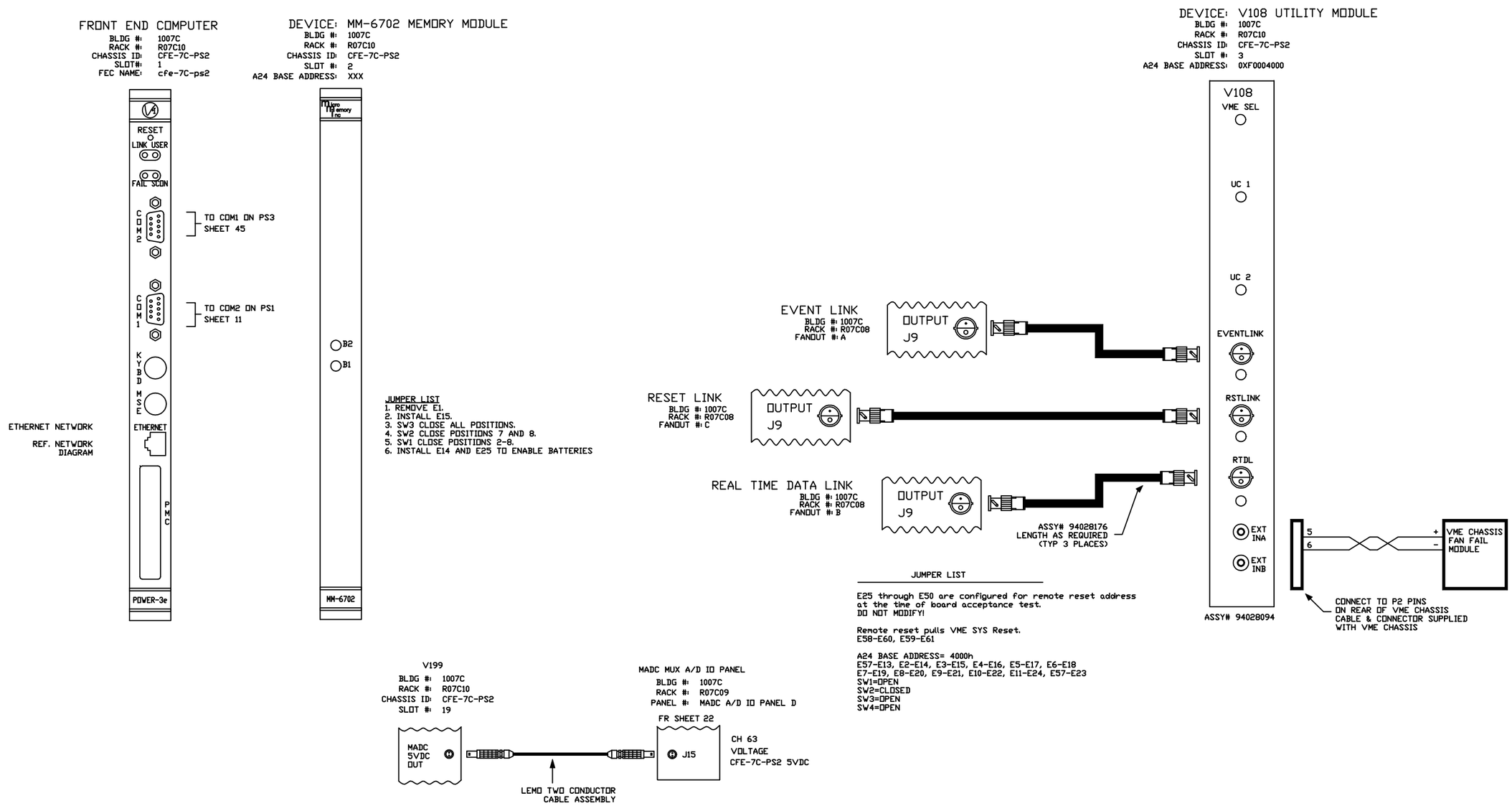

-3	-2	-1	REF DESIGNATOR	ITEM NO.	DESCRIPTION	MAT'L. DWG NO.,BNL NO.
QTY REQD						

INTERPRET IN GENERAL ACCORDANCE WITH ASME Y14.24M-1989	Q.A. CATEGORY A-3	DATE	BROOKHAVEN NATIONAL LABORATORY UPTON, N.Y. 11973
UNLESS OTHERWISE SPECIFIED DIMENSIONS ARE IN INCHES	DRAWN BY Venegas	8/11/99	RHIC CONTROLS WIRING DIAGRAM
DECIMAL TOLERANCES .X ±.030 .XX ±.015 .XXX ±.005 ANGULAR TOLERANCE ± .5°	CHECKED BY		ALCOVE 1007C, VME CHASSIS CFE-7C-PS2
	DESIGN APPROVAL		CPU/MEMORY /V108 UTIL MODULE
	ENGINEER APPROVAL R. MICHNOFF	10/21/97	
	SUPVR. APPROVAL		SIZE D / 94028624 / REV. A
OUTSTANDING ECN	NA FINISH	BREAK SHARP EDGES MAX. XX MIN. XX	NEXT ASSEMBLY / DRAWING NUMBER
			MATERIAL: ——— SCALE: NA WEIGHT: – SHEET 28

*AUTOCAD

REV.	ZONE	ECN NO.	DATE	BY	CKR	APP.

ACS, BNL 8/24/00 11:06 AM 8624_29.dwg

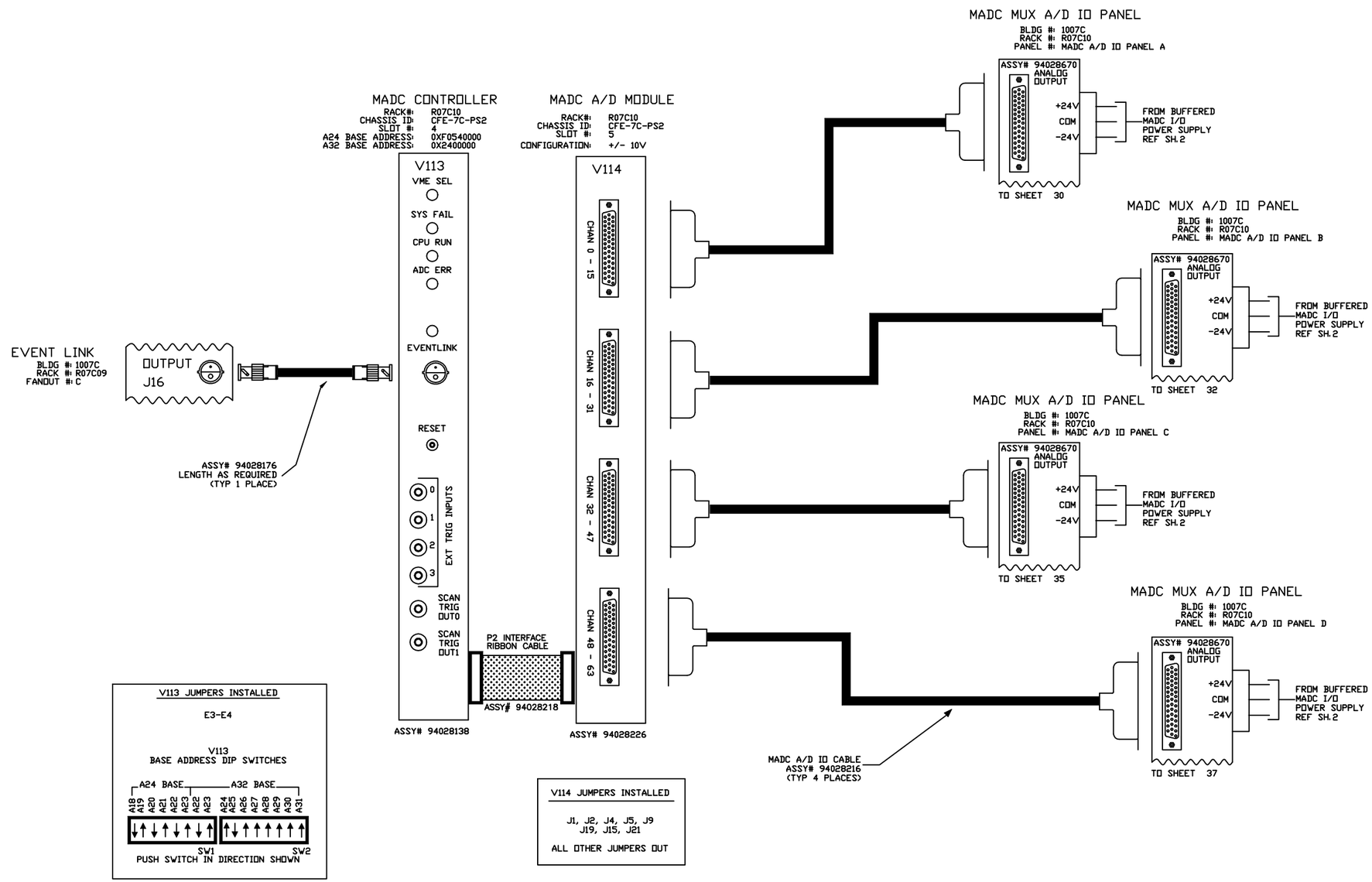

V113 JUMPERS INSTALLED

E3-E4

V113
BASE ADDRESS DIP SWITCHES

PUSH SWITCH IN DIRECTION SHOWN

V114 JUMPERS INSTALLED

J1, J2, J4, J5, J9
J19, J15, J21

ALL OTHER JUMPERS OUT

-3	-2	-1	REF DESIGNATOR	ITEM NO.	DESCRIPTION	MAT'L DWG NO./BNL NO.
QTY REQD						

INTERPRET IN GENERAL ACCORDANCE WITH ASME Y14.24M-1989

UNLESS OTHERWISE SPECIFIED DIMENSIONS ARE IN INCHES

DECIMAL TOLERANCES
.X ±.030
.XX ±.015
.XXX ±.005
ANGULAR TOLERANCE
± .5°

NA FINISH — BREAK SHARP EDGES MAX. XX MIN. XX

OUTSTANDING ECN

Q.A. CATEGORY A-3		DATE
DRAWN BY	Ed Koropsak	3/5/98
CHECKED BY		
DESIGN APPROVAL		
ENGINEER APPROVAL	R. MICHNOFF	3/5/98
SUPVR. APPROVAL		

NEXT ASSEMBLY

BROOKHAVEN NATIONAL LABORATORY
UPTON, N.Y. 11973

RHIC CONTROLS WIRING DIAGRAM
ALCOVE 1007C, VME CHASSIS CFE-7C-PS2
MADC SYSTEM

SIZE D — DRAWING NUMBER 94028624 — REV. A

MATERIAL: ——— SCALE: NA WEIGHT: – SHEET 29 OF 52

*AUTOCAD

REV.	ZONE	ECN NO.	DATE	BY	CKR	APP.

CONTROLS- 2/28/01 2:12 PM 8624_30.dwg

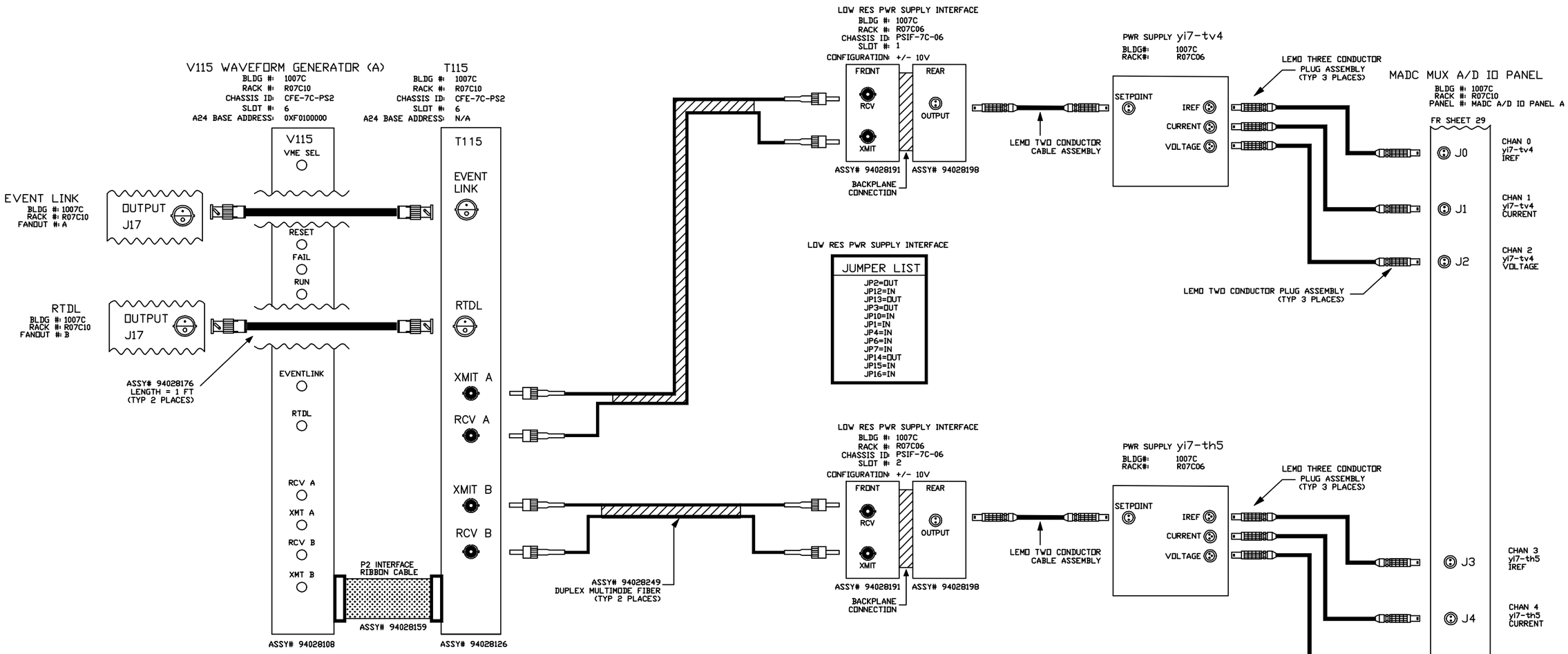

V115 JUMPER LIST
JP3=IN JP4=IN JP1=OUT JP2=OUT
A24 BASE ADDRESS JB1-A23=IN JB1-A22=IN JB1-A21=IN JB1-A20=OUT JB1-A19=IN JB1-A18=IN

-3	-2	-1	REF DESIGNATOR	ITEM NO.	DESCRIPTION	MAT'L DWG NO./BNL NO.
QTY REQD						

INTERPRET IN GENERAL ACCORDANCE WITH ASME Y14.24M-1989

UNLESS OTHERWISE SPECIFIED DIMENSIONS ARE IN INCHES

DECIMAL TOLERANCES
.X ±.030
.XX ±.015
.XXX ±.005
ANGULAR TOLERANCE
± .5°

NA FINISH

BREAK SHARP EDGES
MAX. XX MIN. XX

OUTSTANDING ECN

Q.A. CATEGORY A-3		DATE
DRAWN BY	Ed Koropsak	3/5/98
CHECKED BY		
DESIGN APPROVAL		
ENGINEER APPROVAL	R. MICHNOFF	3/5/98
SUPVR. APPROVAL		

NEXT ASSEMBLY

BROOKHAVEN NATIONAL LABORATORY
UPTON, N.Y. 11973

RHIC CONTROLS WIRING DIAGRAM
ALCOVE 1007C, CFE-7C-PS2
POWER SUPPLY yi7-tv4/yi7-th5

SIZE D
DRAWING NUMBER 94028624
REV. A

MATERIAL: ——— SCALE: NA WEIGHT: – SHEET 30 OF 53

*AUTOCAD

REV.	ZONE	ECN NO.	DATE	BY	CKR	APP.

CONTROLS- 2/28/01 2:14 PM 8624_31.dwg

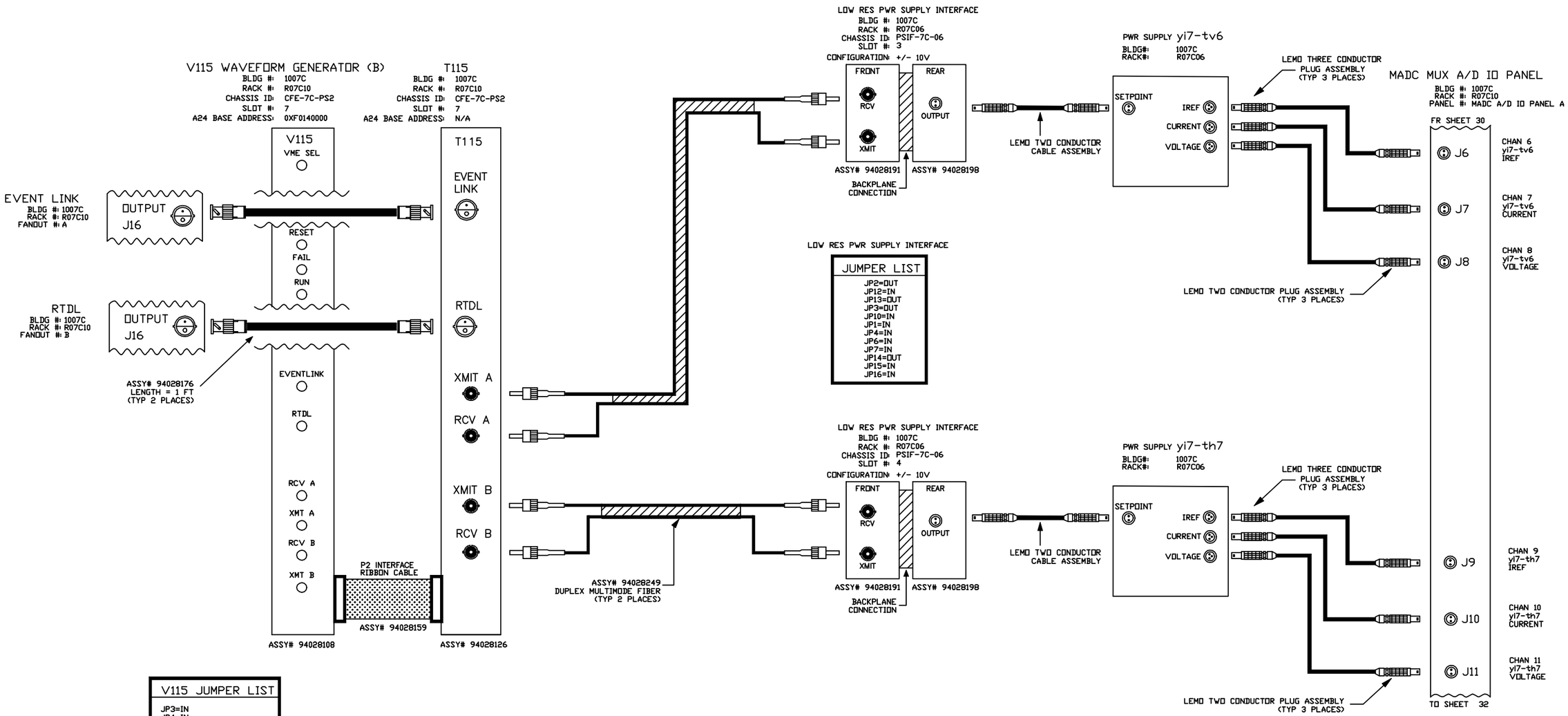

V115 JUMPER LIST
JP3=IN JP4=IN JP1=OUT JP2=OUT
A24 BASE ADDRESS JB1-A23=IN JB1-A22=IN JB1-A21=IN JB1-A20=OUT JB1-A19=IN JB1-A18=OUT

-3	-2	-1	REF DESIGNATOR	ITEM NO.	DESCRIPTION	MAT'L DWG NO./BNL NO.
QTY REQD						

INTERPRET IN GENERAL ACCORDANCE WITH ASME Y14.24M-1989

UNLESS OTHERWISE SPECIFIED DIMENSIONS ARE IN INCHES

DECIMAL TOLERANCES
.X ±.030
.XX ±.015
.XXX ±.005
ANGULAR TOLERANCE
± .5°

OUTSTANDING ECN

NA FINISH

BREAK SHARP EDGES
MAX. XX MIN. XX

Q.A. CATEGORY A-3		DATE
DRAWN BY	Ed Koropsak	3/5/98
CHECKED BY		
DESIGN APPROVAL		
ENGINEER APPROVAL	R. MICHNOFF	3/5/98
SUPVR. APPROVAL		

NEXT ASSEMBLY

BROOKHAVEN NATIONAL LABORATORY
UPTON, N.Y. 11973

RHIC CONTROLS WIRING DIAGRAM
ALCOVE 1007C, CFE-7C-PS2

POWER SUPPLY yi7-tv6/yi7-th7

SIZE D | DRAWING NUMBER 94028624 | REV. A

MATERIAL: ——— SCALE: NA WEIGHT: – SHEET 31 OF 53

*AUTOCAD

REV.	ZONE	ECN NO.	DATE	BY	CKR	APP.

CONTROLS- 6/17/03 1:36 PM 8624_32.dwg

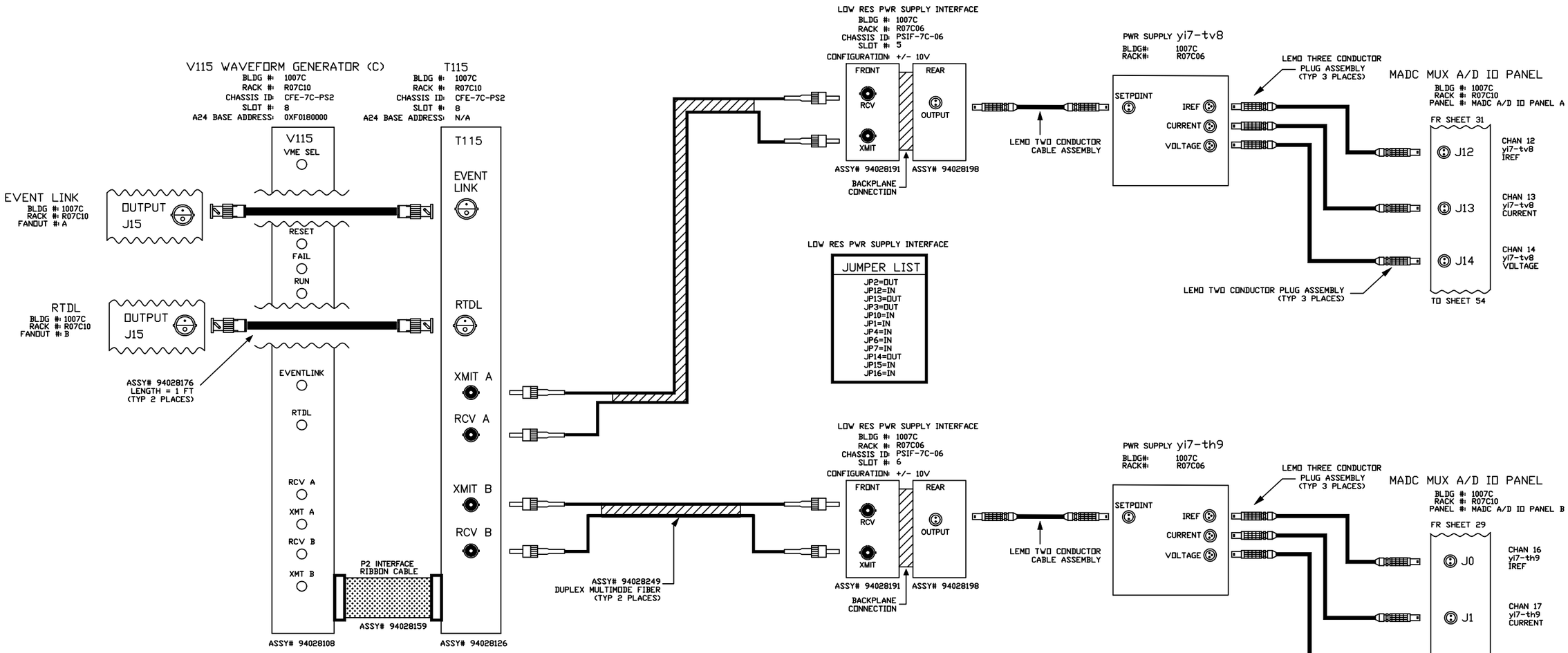

V115 JUMPER LIST
JP3=IN JP4=IN JP1=OUT JP2=OUT
A24 BASE ADDRESS JB1-A23=IN JB1-A22=IN JB1-A21=IN JB1-A20=OUT JB1-A19=OUT JB1-A18=IN

-3	-2	-1	REF DESIGNATOR	ITEM NO.	DESCRIPTION	MAT'L DWG NO./BNL NO.
QTY REQD						

INTERPRET IN GENERAL ACCORDANCE WITH ASME Y14.24M-1989

UNLESS OTHERWISE SPECIFIED DIMENSIONS ARE IN INCHES

DECIMAL TOLERANCES
.X ±.030
.XX ±.015
.XXX ±.005
ANGULAR TOLERANCE
± .5°

NA FINISH

BREAK SHARP EDGES
MAX. XX MIN. XX

OUTSTANDING ECN

Q.A. CATEGORY A-3		DATE
DRAWN BY	Ed Koropsak	3/9/98
CHECKED BY		
DESIGN APPROVAL		
ENGINEER APPROVAL	R. MICHNOFF	3/9/98
SUPVR. APPROVAL		

NEXT ASSEMBLY

BROOKHAVEN NATIONAL LABORATORY
UPTON, N.Y. 11973

RHIC CONTROLS WIRING DIAGRAM
ALCOVE 1007C, CFE-7C-PS2
POWER SUPPLY yi7-tv8/yi7-th9

SIZE D
DRAWING NUMBER 94028624
REV. A

MATERIAL: ——— SCALE: NA WEIGHT: – SHEET 32

*AUTOCAD

REV.	ZONE	ECN NO.	DATE	BY	CKR	APP.

CONTROLS- 2/28/01 2:17 PM 8624_33.dwg

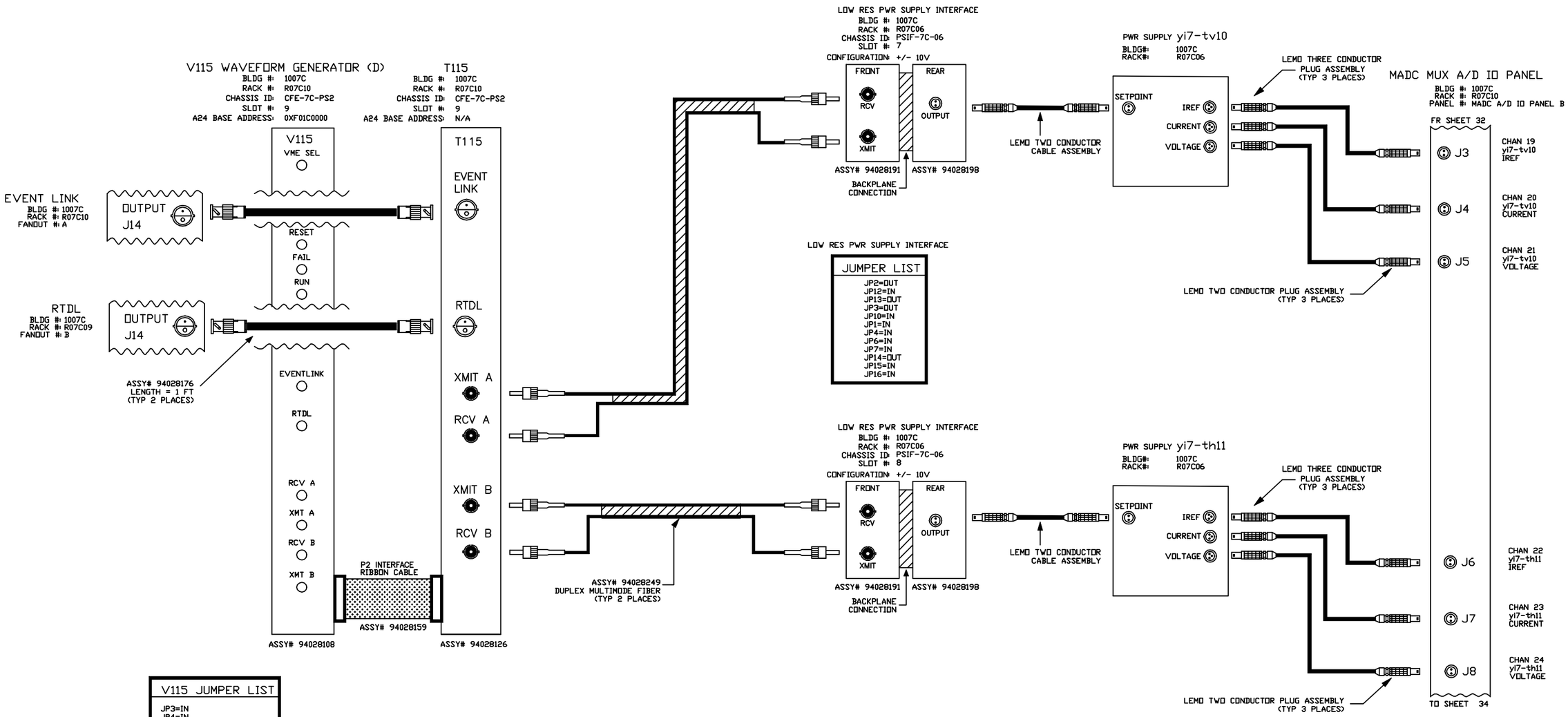

V115 JUMPER LIST
JP3=IN JP4=IN JP1=OUT JP2=OUT
A24 BASE ADDRESS JB1-A23=IN JB1-A22=IN JB1-A21=IN JB1-A20=OUT JB1-A19=OUT JB1-A18=OUT

-3	-2	-1	REF DESIGNATOR	ITEM NO.	DESCRIPTION	MAT'L DWG NO./BNL NO.
QTY REQD						

INTERPRET IN GENERAL ACCORDANCE WITH ASME Y14.24M-1989

UNLESS OTHERWISE SPECIFIED DIMENSIONS ARE IN INCHES

DECIMAL TOLERANCES
.X ±.030
.XX ±.015
.XXX ±.005
ANGULAR TOLERANCE
± .5°

NA FINISH

BREAK SHARP EDGES
MAX. XX MIN. XX

OUTSTANDING ECN

Q.A. CATEGORY A-3		DATE
DRAWN BY	Ed Koropsak	3/9/98
CHECKED BY		
DESIGN APPROVAL		
ENGINEER APPROVAL	R. MICHNOFF	3/9/98
SUPVR. APPROVAL		

NEXT ASSEMBLY

BROOKHAVEN NATIONAL LABORATORY
UPTON, N.Y. 11973

RHIC CONTROLS WIRING DIAGRAM
ALCOVE 1007C, CFE-7C-PS2

POWER SUPPLY yi7-tv10/yi7-th11

SIZE D | DRAWING NUMBER 94028624 | REV. A

MATERIAL: ——— SCALE: NA WEIGHT: – SHEET 33 OF 53

1 *AUTOCAD

CONTROLS- 6/17/03 1:38 PM 8624_34.dwg

REV.	ZONE	ECN NO.	DATE	BY	CKR	APP.

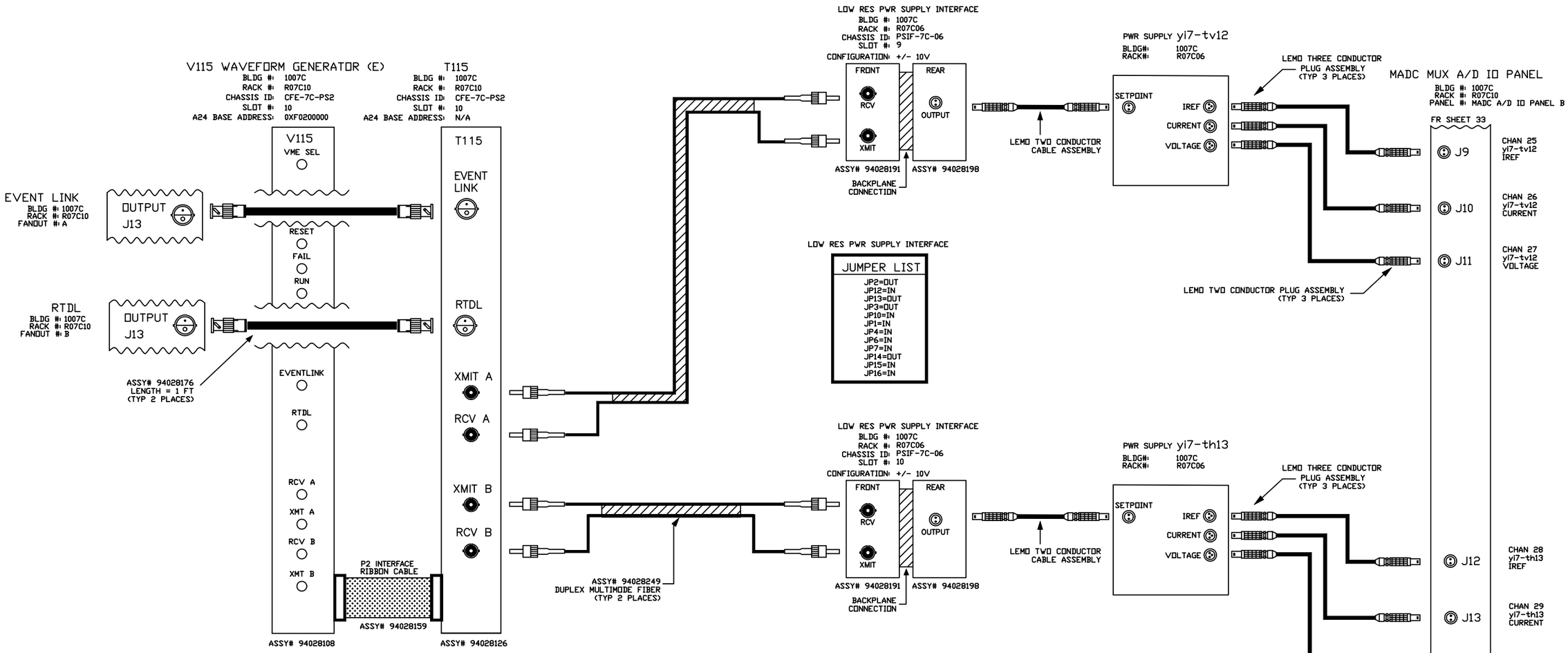

LOW RES PWR SUPPLY INTERFACE

JUMPER LIST
JP2=OUT
JP12=IN
JP13=OUT
JP3=OUT
JP10=IN
JP1=IN
JP4=IN
JP6=IN
JP7=IN
JP14=OUT
JP15=IN
JP16=IN

V115 JUMPER LIST
JP3=IN
JP4=IN
JP1=OUT
JP2=OUT
A24 BASE ADDRESS
JB1-A23=IN
JB1-A22=IN
JB1-A21=OUT
JB1-A20=IN
JB1-A19=IN
JB1-A18=IN

-3	-2	-1	REF DESIGNATOR	ITEM NO.	DESCRIPTION	MAT'L DWG NO./INL NO.
QTY REQD						

INTERPRET IN GENERAL ACCORDANCE WITH ASME Y14.24M-1989

UNLESS OTHERWISE SPECIFIED DIMENSIONS ARE IN INCHES

DECIMAL TOLERANCES
.X ±.030
.XX ±.015
.XXX ±.005
ANGULAR TOLERANCE
± .5°

NA FINISH

BREAK SHARP EDGES
MAX. XX MIN. XX

OUTSTANDING ECN

Q.A. CATEGORY A-3		DATE
DRAWN BY	Ed Koropsak	3/9/98
CHECKED BY		
DESIGN APPROVAL		
ENGINEER APPROVAL	R. MICHNOFF	3/9/98
SUPVR. APPROVAL		

NEXT ASSEMBLY

BROOKHAVEN NATIONAL LABORATORY
UPTON, N.Y. 11973

RHIC CONTROLS WIRING DIAGRAM
ALCOVE 1007C, CFE-7C-PS2
POWER SUPPLY yi7-tv12/yi7-th13

SIZE D
DRAWING NUMBER 94028624
REV. A

MATERIAL: ——— SCALE: NA WEIGHT: – SHEET 34

*AUTOCAD

REV.	ZONE	ECN NO.	DATE	BY	CKR	APP.

CONTROLS- 2/28/01 2:37 PM 8624_35.dwg

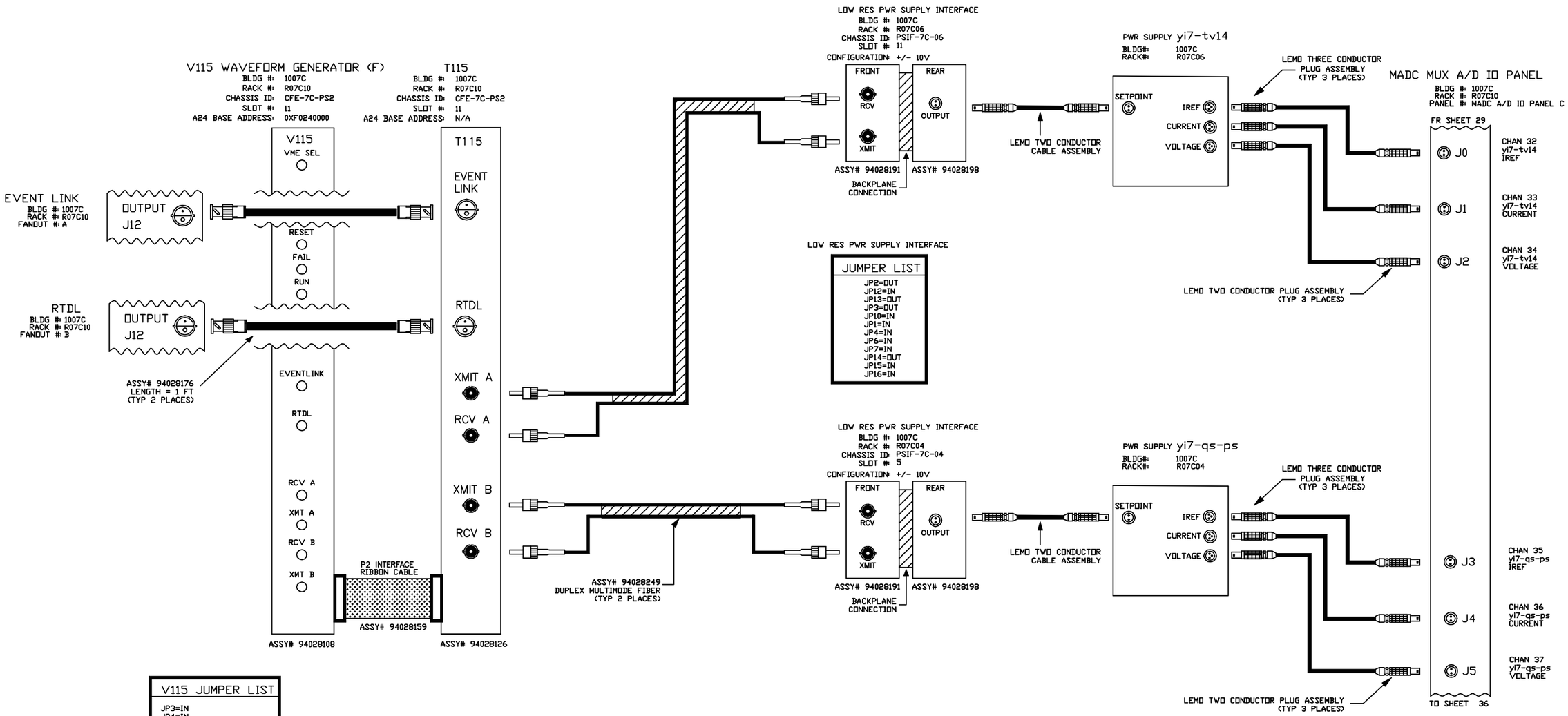

V115 JUMPER LIST
JP3=IN JP4=IN JP1=OUT JP2=OUT
A24 BASE ADDRESS JB1-A23=IN JB1-A22=IN JB1-A21=OUT JB1-A20=IN JB1-A19=IN JB1-A18=OUT

-3	-2	-1	REF DESIGNATOR	ITEM NO.	DESCRIPTION	MAT'L DWG NO./BNL NO.
QTY REQD						

INTERPRET IN GENERAL ACCORDANCE WITH ASME Y14.24M-1989

UNLESS OTHERWISE SPECIFIED DIMENSIONS ARE IN INCHES

DECIMAL TOLERANCES
.X ±.030
.XX ±.015
.XXX ±.005
ANGULAR TOLERANCE
± .5°

OUTSTANDING ECN

NA FINISH

BREAK SHARP EDGES
MAX. XX MIN. XX

Q.A. CATEGORY A-3		DATE
DRAWN BY	Ed Koropsak	3/9/98
CHECKED BY		
DESIGN APPROVAL		
ENGINEER APPROVAL	R. MICHNOFF	3/9/98
SUPVR. APPROVAL		

NEXT ASSEMBLY

BROOKHAVEN NATIONAL LABORATORY
UPTON, N.Y. 11973

RHIC CONTROLS WIRING DIAGRAM
ALCOVE 1007C, CFE-7C-PS2
PWR SUPPLY yi7-tv14/yi7-qs-ps

SIZE D
DRAWING NUMBER 94028624
REV. A

MATERIAL: ——— SCALE: NA WEIGHT: – SHEET 35 OF 53

*AUTOCAD

REV.	ZONE	ECN NO.	DATE	BY	CKR	APP.

CONTROLS- 2/28/01 2:39 PM 8624_36.dwg

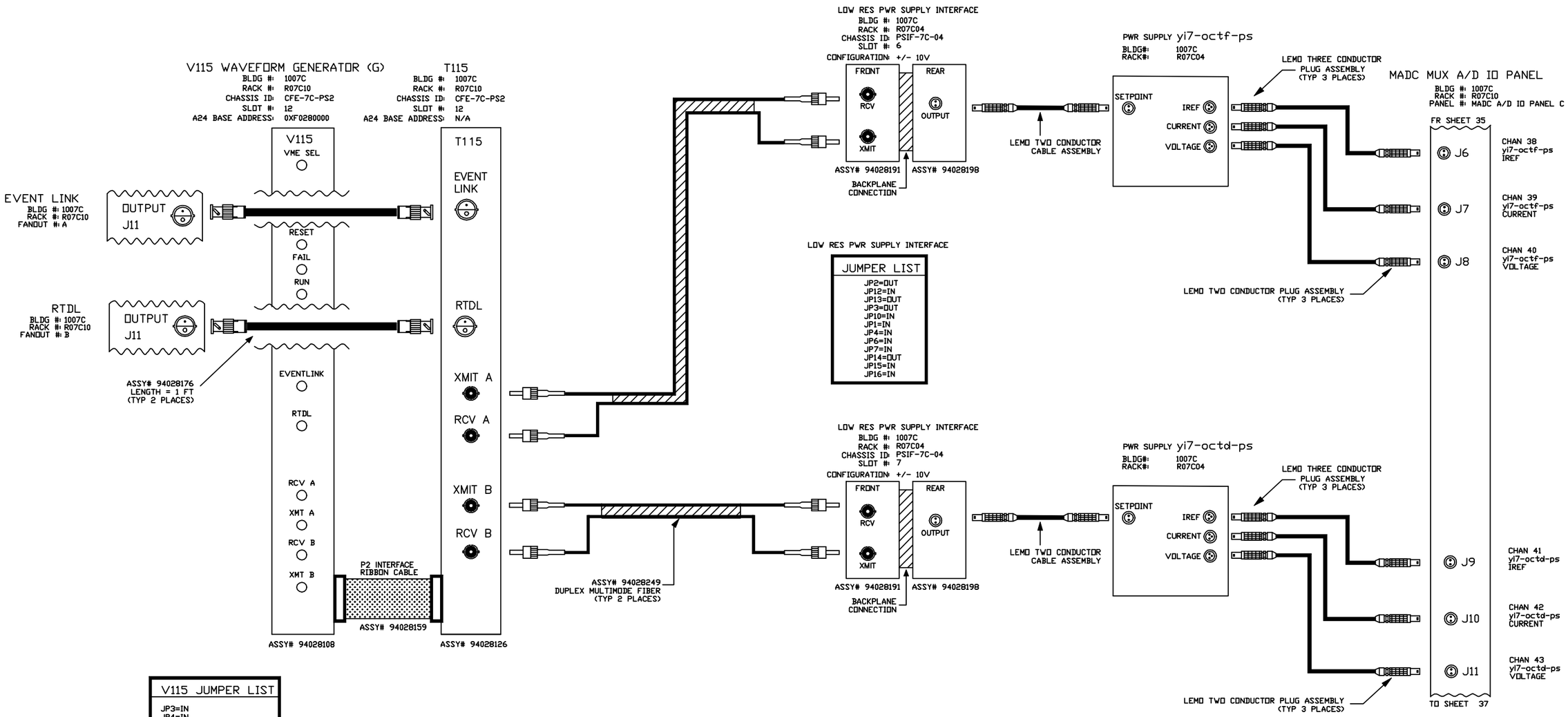

V115 JUMPER LIST
JP3=IN JP4=IN JP1=OUT JP2=OUT
A24 BASE ADDRESS JB1-A23=IN JB1-A22=IN JB1-A21=OUT JB1-A20=IN JB1-A19=OUT JB1-A18=IN

-3	-2	-1	REF DESIGNATOR	ITEM NO.	DESCRIPTION	MAT'L DWG NO./BNL NO.
QTY REQD						

INTERPRET IN GENERAL ACCORDANCE WITH ASME Y14.24M-1989

UNLESS OTHERWISE SPECIFIED DIMENSIONS ARE IN INCHES

DECIMAL TOLERANCES
.X ±.030
.XX ±.015
.XXX ±.005
ANGULAR TOLERANCE
± .5°

OUTSTANDING ECN

NA FINISH

BREAK SHARP EDGES
MAX. XX MIN. XX

Q.A. CATEGORY A-3		DATE
DRAWN BY	Ed Koropsak	3/9/98
CHECKED BY		
DESIGN APPROVAL		
ENGINEER APPROVAL	R. MICHNOFF	3/9/98
SUPVR. APPROVAL		

NEXT ASSEMBLY

BROOKHAVEN NATIONAL LABORATORY
UPTON, N.Y. 11973

RHIC CONTROLS WIRING DIAGRAM
ALCOVE 1007C, CFE-7C-PS2

PWRSPLY yi7-octf-ps/yi7-octd-ps

SIZE D
DRAWING NUMBER 94028624
REV. A

MATERIAL: ——— SCALE: NA WEIGHT: – SHEET 36 OF 53

1 *AUTOCAD

REV.	ZONE	ECN NO.	DATE	BY	CKR	APP.

CONTROLS- 2/28/01 2:40 PM 8624_37.dwg

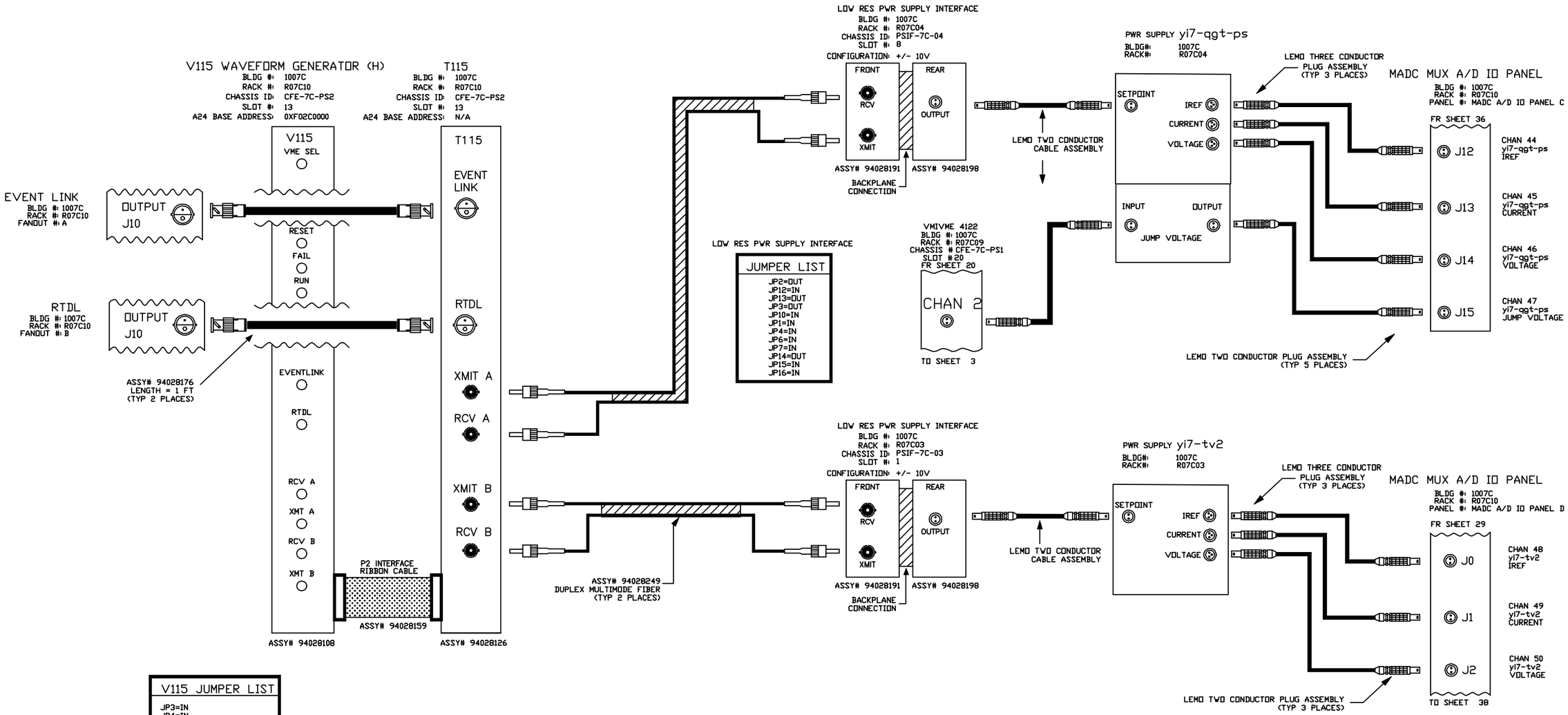

V115 JUMPER LIST
JP3=IN JP4=IN JP1=OUT JP2=OUT
A24 BASE ADDRESS JB1-A23=IN JB1-A22=IN JB1-A21=OUT JB1-A20=IN JB1-A19=OUT JB1-A18=OUT

-3	-2	-1	REF DESIGNATOR	ITEM NO.	DESCRIPTION	MAT'L DWG NO./BNL NO.
QTY REQD						

INTERPRET IN GENERAL ACCORDANCE WITH ASME Y14.24M-1989

UNLESS OTHERWISE SPECIFIED DIMENSIONS ARE IN INCHES

DECIMAL TOLERANCES
.X ±.030
.XX ±.015
.XXX ±.005
ANGULAR TOLERANCE
± .5°

OUTSTANDING ECN

NA FINISH

BREAK SHARP EDGES
MAX. XX MIN. XX

Q.A. CATEGORY A-3		DATE
DRAWN BY	Ed Koropsak	3/9/98
CHECKED BY		
DESIGN APPROVAL		
ENGINEER APPROVAL	R. MICHNOFF	3/9/98
SUPVR. APPROVAL		

NEXT ASSEMBLY

BROOKHAVEN NATIONAL LABORATORY
UPTON, N.Y. 11973

RHIC CONTROLS WIRING DIAGRAM
ALCOVE 1007C, CFE-7C-PS2
PWR SPLY yi7-qgt-ps/yi7-tv2

SIZE D
DRAWING NUMBER 94028624
REV. A

MATERIAL: ——— SCALE: NA WEIGHT: – SHEET 37 OF 53

*AUTOCAD

REV.	ZONE	ECN NO.	DATE	BY	CKR	APP.

CONTROLS- 2/28/01 2:46 PM 8624_38.dwg

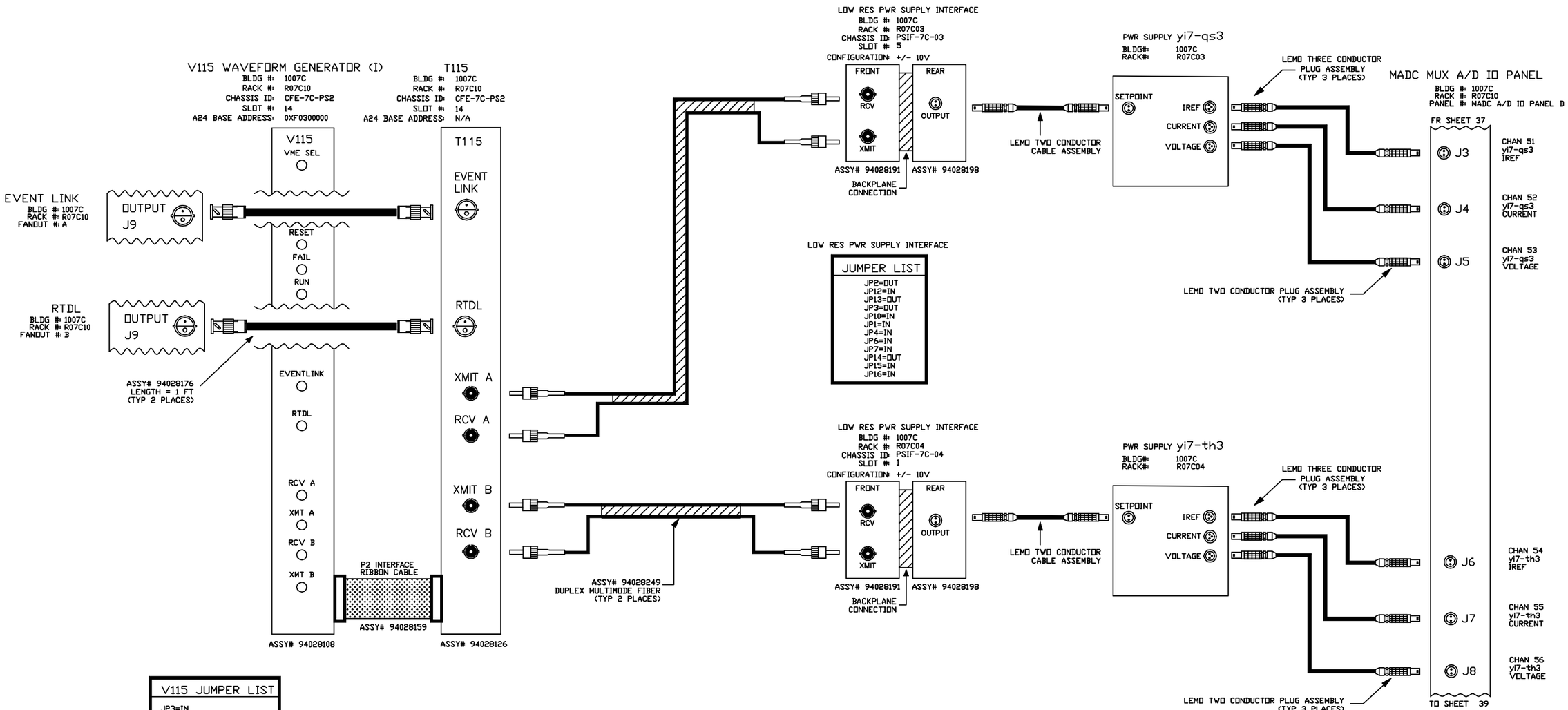

V115 JUMPER LIST
JP3=IN JP4=IN JP1=OUT JP2=OUT
A24 BASE ADDRESS JB1-A23=IN JB1-A22=IN JB1-A21=OUT JB1-A20=OUT JB1-A19=IN JB1-A18=IN

-3	-2	-1	REF DESIGNATOR	ITEM NO.	DESCRIPTION	MAT'L DWG NO./BNL NO.
QTY REQD						

INTERPRET IN GENERAL ACCORDANCE WITH ASME Y14.24M-1989

UNLESS OTHERWISE SPECIFIED DIMENSIONS ARE IN INCHES

DECIMAL TOLERANCES
.X ±.030
.XX ±.015
.XXX ±.005
ANGULAR TOLERANCE
± .5°

NA FINISH

BREAK SHARP EDGES
MAX. XX MIN. XX

OUTSTANDING ECN

Q.A. CATEGORY A-3		DATE
DRAWN BY	Ed Koropsak	3/9/98
CHECKED BY		
DESIGN APPROVAL		
ENGINEER APPROVAL	R. MICHNOFF	3/9/98
SUPVR. APPROVAL		

NEXT ASSEMBLY

BROOKHAVEN NATIONAL LABORATORY
UPTON, N.Y. 11973

RHIC CONTROLS WIRING DIAGRAM
ALCOVE 1007C, CFE-7C-PS2

POWER SUPPLY yi7-qs3/yi7-th3

SIZE D | DRAWING NUMBER 94028624 | REV. A

MATERIAL: ——— SCALE: NA WEIGHT: – SHEET 38 OF 53

1 *AUTOCAD

REV.	ZONE	ECN NO.	DATE	BY	CKR	APP.

CONTROLS- 6/17/03 1:39 PM 8624_39.dwg

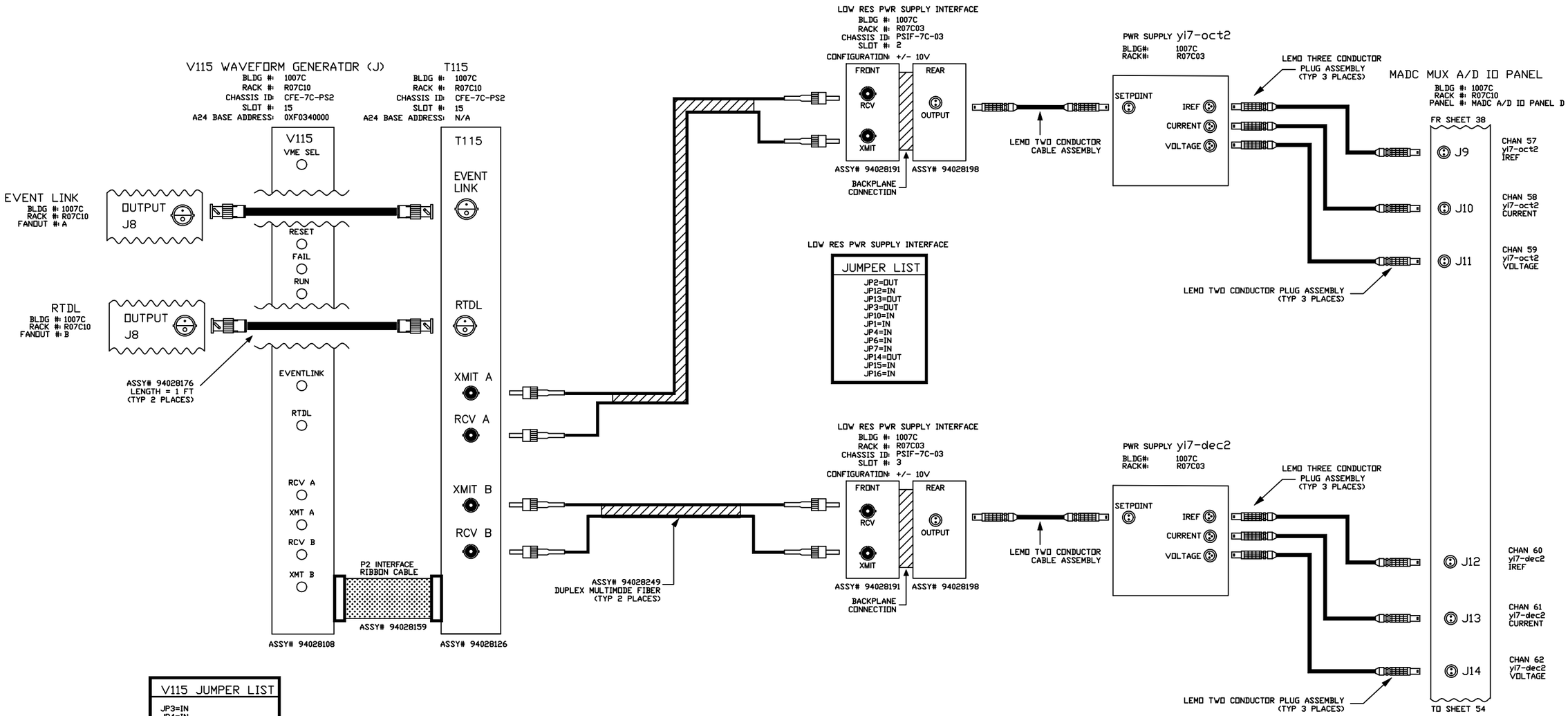

V115 JUMPER LIST
JP3=IN JP4=IN JP1=OUT JP2=OUT
A24 BASE ADDRESS JB1-A23=IN JB1-A22=IN JB1-A21=OUT JB1-A20=OUT JB1-A19=IN JB1-A18=OUT

-3	-2	-1	REF DESIGNATOR	ITEM NO.	DESCRIPTION	MAT'L DWG NO./BNL NO.
QTY REQD						

INTERPRET IN GENERAL ACCORDANCE WITH ASME Y14.24M-1989

UNLESS OTHERWISE SPECIFIED DIMENSIONS ARE IN INCHES

DECIMAL TOLERANCES
.X ±.030
.XX ±.015
.XXX ±.005
ANGULAR TOLERANCE
± .5°

NA FINISH

BREAK SHARP EDGES MAX. XX MIN. XX

OUTSTANDING ECN

Q.A. CATEGORY A-3		DATE
DRAWN BY	Ed Koropsak	3/9/98
CHECKED BY		
DESIGN APPROVAL		
ENGINEER APPROVAL	R. MICHNOFF	3/9/98
SUPVR. APPROVAL		

NEXT ASSEMBLY

BROOKHAVEN NATIONAL LABORATORY
UPTON, N.Y. 11973

RHIC CONTROLS WIRING DIAGRAM
ALCOVE 1007C, CFE-7C-PS2

POWER SUPPLY yi7-oct2/yi7-dec2

SIZE D | DRAWING NUMBER 94028624 | REV. A

MATERIAL: ——— SCALE: NA WEIGHT: – SHEET 39

*AUTOCAD

REV.	ZONE	ECN NO.	DATE	BY	CKR	APP.

CONTROLS- 2/28/01 2:51 PM 8624_40.dwg

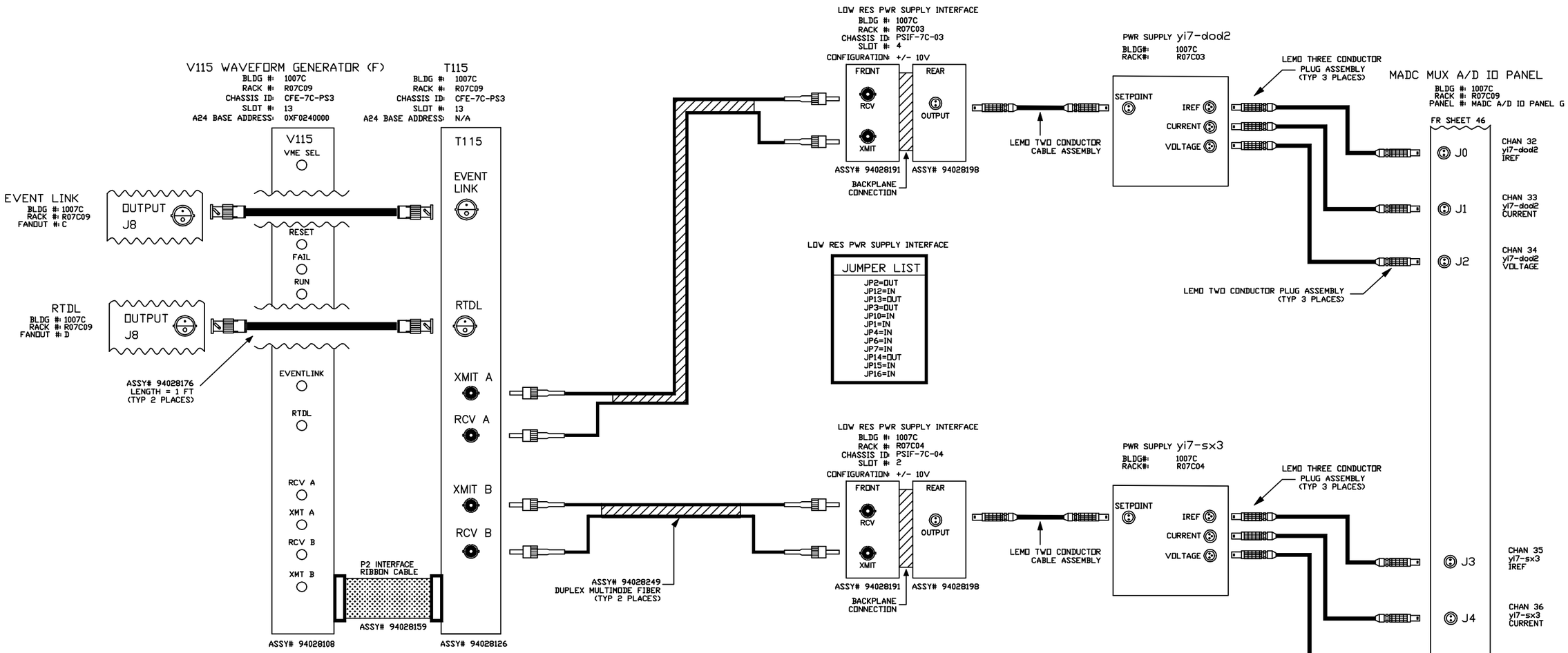

V115 JUMPER LIST
JP3=IN JP4=IN JP1=OUT JP2=OUT
A24 BASE ADDRESS JB1-A23=IN JB1-A22=IN JB1-A21=OUT JB1-A20=IN JB1-A19=IN JB1-A18=OUT

-3	-2	-1	REF DESIGNATOR	ITEM NO.	DESCRIPTION	MAT'L DWG NO./BNL NO.
QTY REQD						

INTERPRET IN GENERAL ACCORDANCE WITH ASME Y14.24M-1989

UNLESS OTHERWISE SPECIFIED DIMENSIONS ARE IN INCHES

DECIMAL TOLERANCES
.X ±.030
.XX ±.015
.XXX ±.005
ANGULAR TOLERANCE
± .5°

OUTSTANDING ECN

NA FINISH

BREAK SHARP EDGES
MAX. XX MIN. XX

Q.A. CATEGORY A-3		DATE
DRAWN BY	Ed Koropsak	3/9/98
CHECKED BY		
DESIGN APPROVAL		
ENGINEER APPROVAL	R. MICHNOFF	3/9/98
SUPVR. APPROVAL		

NEXT ASSEMBLY

BROOKHAVEN NATIONAL LABORATORY
UPTON, N.Y. 11973

RHIC CONTROLS WIRING DIAGRAM
ALCOVE 1007C, CFE-7C-PS3

POWER SUPPLY yi7-dod2/yi7-sx3

SIZE D | DRAWING NUMBER 94028624 | REV. A

MATERIAL: ——— SCALE: NA WEIGHT: – SHEET 40 OF 53

*AUTOCAD

REV.	ZONE	ECN NO.	DATE	BY	CKR	APP.

CONTROLS- 2/28/01 2:54 PM 8624_41.dwg

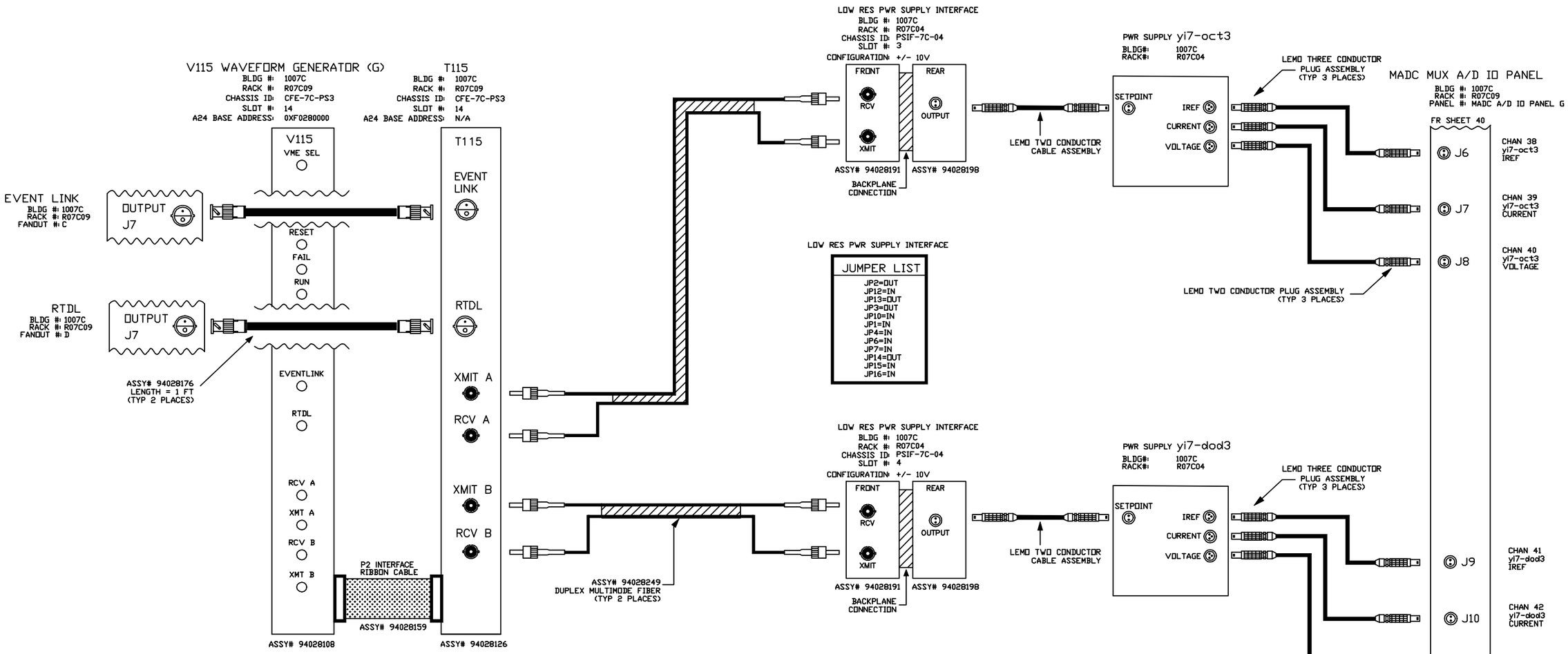

V115 JUMPER LIST
JP3=IN JP4=IN JP1=OUT JP2=OUT
A24 BASE ADDRESS JB1-A23=IN JB1-A22=IN JB1-A21=OUT JB1-A20=IN JB1-A19=OUT JB1-A18=IN

-3	-2	-1	REF DESIGNATOR	ITEM NO.	DESCRIPTION	MAT'L DWG NO./BNL NO.
QTY REQD						

INTERPRET IN GENERAL ACCORDANCE WITH ASME Y14.24M-1989

UNLESS OTHERWISE SPECIFIED DIMENSIONS ARE IN INCHES

DECIMAL TOLERANCES
.X ±.030
.XX ±.015
.XXX ±.005
ANGULAR TOLERANCE
± .5°

OUTSTANDING ECN

NA FINISH

BREAK SHARP EDGES
MAX. XX MIN. XX

Q.A. CATEGORY A-3		DATE
DRAWN BY	Ed Koropsak	3/9/98
CHECKED BY		
DESIGN APPROVAL		
ENGINEER APPROVAL	R. MICHNOFF	3/9/98
SUPVR. APPROVAL		

NEXT ASSEMBLY

BROOKHAVEN NATIONAL LABORATORY
UPTON, N.Y. 11973

RHIC CONTROLS WIRING DIAGRAM
ALCOVE 1007C, CFE-7C-PS3
PWRSPLY yi7-oct3/yi7-dod3

SIZE D | DRAWING NUMBER 94028624 | REV. A

MATERIAL: ——— SCALE: NA WEIGHT: – SHEET 41 OF 53

*AUTOCAD

REV.	ZONE	ECN NO.	DATE	BY	CKR	APP.

CONTROLS- 6/17/03 1:41 PM 8624_42.dwg

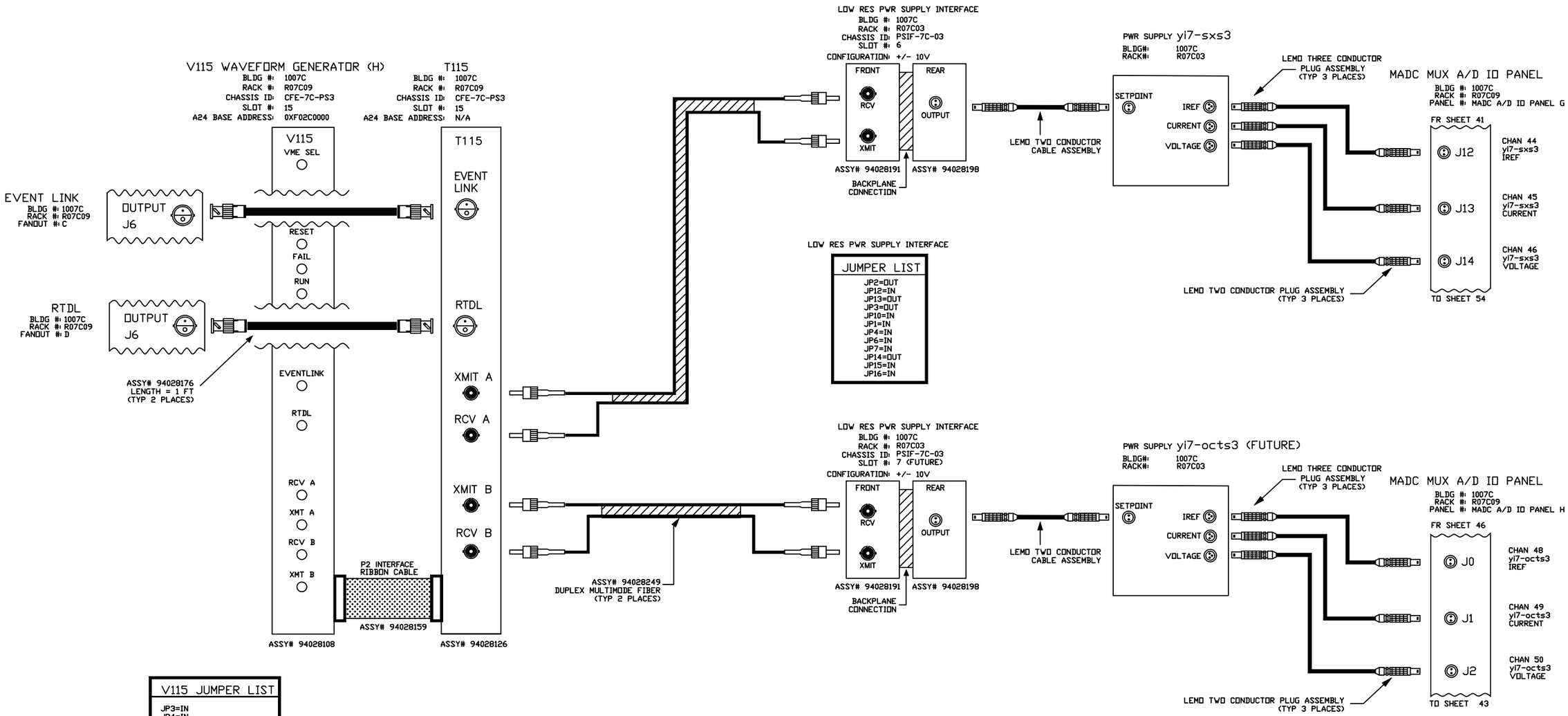

V115 JUMPER LIST
JP3=IN JP4=IN JP1=OUT JP2=OUT
A24 BASE ADDRESS JB1-A23=IN JB1-A22=IN JB1-A21=OUT JB1-A20=IN JB1-A19=OUT JB1-A18=OUT

-3	-2	-1	REF DESIGNATOR	ITEM NO.	DESCRIPTION	MAT'L DWG NO./INL NO.
QTY REQD						

INTERPRET IN GENERAL ACCORDANCE WITH ASME Y14.24M-1989

UNLESS OTHERWISE SPECIFIED DIMENSIONS ARE IN INCHES

DECIMAL TOLERANCES
.X ±.030
.XX ±.015
.XXX ±.005
ANGULAR TOLERANCE
± .5°

NA FINISH

BREAK SHARP EDGES
MAX. XX MIN. XX

OUTSTANDING ECN

Q.A. CATEGORY A-3		DATE
DRAWN BY	Ed Koropsak	3/9/98
CHECKED BY		
DESIGN APPROVAL		
ENGINEER APPROVAL	R. MICHNOFF	3/9/98
SUPVR. APPROVAL		

NEXT ASSEMBLY

BROOKHAVEN NATIONAL LABORATORY
UPTON, N.Y. 11973

RHIC CONTROLS WIRING DIAGRAM
ALCOVE 1007C, CFE-7C-PS3
PWR SPLY yi7-sxs3/yi7-octs3

SIZE D
DRAWING NUMBER 94028624
REV. A

MATERIAL: ——— SCALE: NA WEIGHT: – SHEET 42

*AUTOCAD

REV.	ZONE	ECN NO.	DATE	BY	CKR	APP.

CONTROLS- 6/2/03 10:40 AM 8624_43.dwg

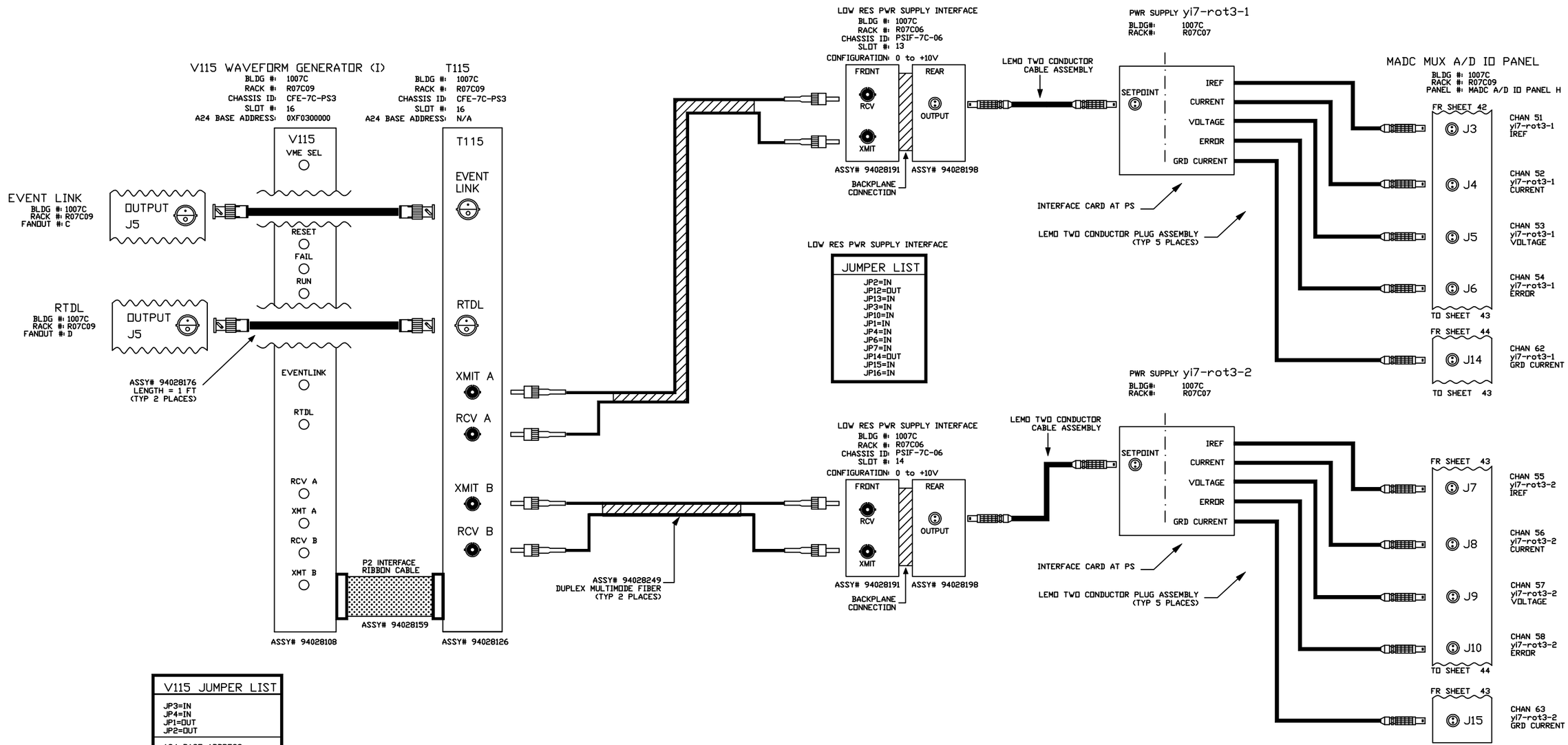

LOW RES PWR SUPPLY INTERFACE

JUMPER LIST
JP2=IN
JP12=OUT
JP13=IN
JP3=IN
JP10=IN
JP1=IN
JP4=IN
JP6=IN
JP7=IN
JP14=OUT
JP15=IN
JP16=IN

V115 JUMPER LIST
JP3=IN JP4=IN JP1=OUT JP2=OUT
A24 BASE ADDRESS JB1-A23=IN JB1-A22=IN JB1-A21=OUT JB1-A20=OUT JB1-A19=IN JB1-A18=IN

-3	-2	-1	REF DESIGNATOR	ITEM NO.	DESCRIPTION	MAT'L. DWG NO./BNL NO.
QTY REQD						

INTERPRET IN GENERAL ACCORDANCE WITH ASME Y14.24M-1989

UNLESS OTHERWISE SPECIFIED DIMENSIONS ARE IN INCHES

DECIMAL TOLERANCES
.X ±.030
.XX ±.015
.XXX ±.005
ANGULAR TOLERANCE
± .5°

NA FINISH

BREAK SHARP EDGES
MAX. XX MIN. XX

OUTSTANDING ECN

Q.A. CATEGORY A-3		DATE
DRAWN BY	Ed Koropsak	3/9/98
CHECKED BY		
DESIGN APPROVAL		
ENGINEER APPROVAL	R. MICHNOFF	3/9/98
SUPVR. APPROVAL		

NEXT ASSEMBLY

BROOKHAVEN NATIONAL LABORATORY
UPTON, N.Y. 11973

RHIC CONTROLS WIRING DIAGRAM
ALCOVE 1007C, CFE-7C-PS3
PWRSPLY yi7-rot3-1/yi7-rot3-2

SIZE D | 94028624 | REV. A
DRAWING NUMBER

MATERIAL: ——— SCALE: NA WEIGHT: – SHEET 43

1 *AUTOCAD

CONTROLS- 6/2/03 10:46 AM 8624_44.dwg

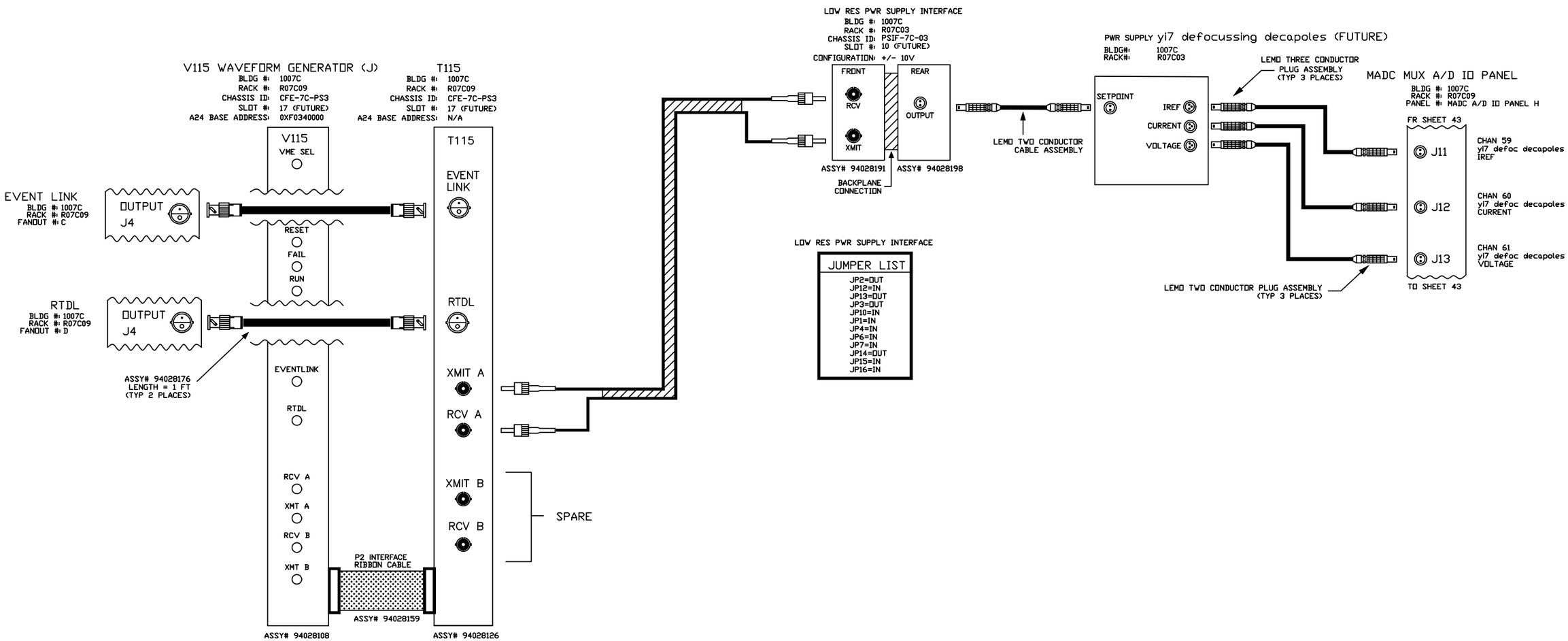

LOW RES PWR SUPPLY INTERFACE

JUMPER LIST
JP2=OUT
JP12=IN
JP13=OUT
JP3=OUT
JP10=IN
JP1=IN
JP4=IN
JP6=IN
JP7=IN
JP14=OUT
JP15=IN
JP16=IN

V115 JUMPER LIST
JP3=IN JP4=IN JP1=OUT JP2=OUT
A24 BASE ADDRESS JB1-A23=IN JB1-A22=IN JB1-A21=OUT JB1-A20=OUT JB1-A19=IN JB1-A18=OUT

REV.	ZONE	ECN NO.	DATE	BY	CKR	APP.

-3	-2	-1	REF DESIGNATOR	ITEM NO.	DESCRIPTION	MAT'L DWG NO./BNL NO.
QTY REQD						

INTERPRET IN GENERAL ACCORDANCE WITH ASME Y14.24M-1989

UNLESS OTHERWISE SPECIFIED DIMENSIONS ARE IN INCHES

DECIMAL TOLERANCES
X ±.030
.XX ±.015
.XXX ±.005
ANGULAR TOLERANCE
± .5°

NA FINISH

BREAK SHARP EDGES
MAX. XX MIN. XX

OUTSTANDING ECN

Q.A. CATEGORY A-3		DATE
DRAWN BY	Ed Koropsak	3/9/98
CHECKED BY		
DESIGN APPROVAL		
ENGINEER APPROVAL	R. MICHNOFF	3/9/98
SUPVR. APPROVAL		

NEXT ASSEMBLY

BROOKHAVEN NATIONAL LABORATORY
UPTON, N.Y. 11973

RHIC CONTROLS WIRING DIAGRAM
ALCOVE 1007C, CFE-7C-PS3
PWR SPLY yi7 defoc decapoles

SIZE D | DRAWING NUMBER 94028624 | REV. A

MATERIAL: ——— SCALE: NA WEIGHT: – SHEET 44

*AUTOCAD

REV.	ZONE	ECN NO.	DATE	BY	CKR	APP.

CONTROLS- 6/17/03 1:44 PM 8624_45.dwg

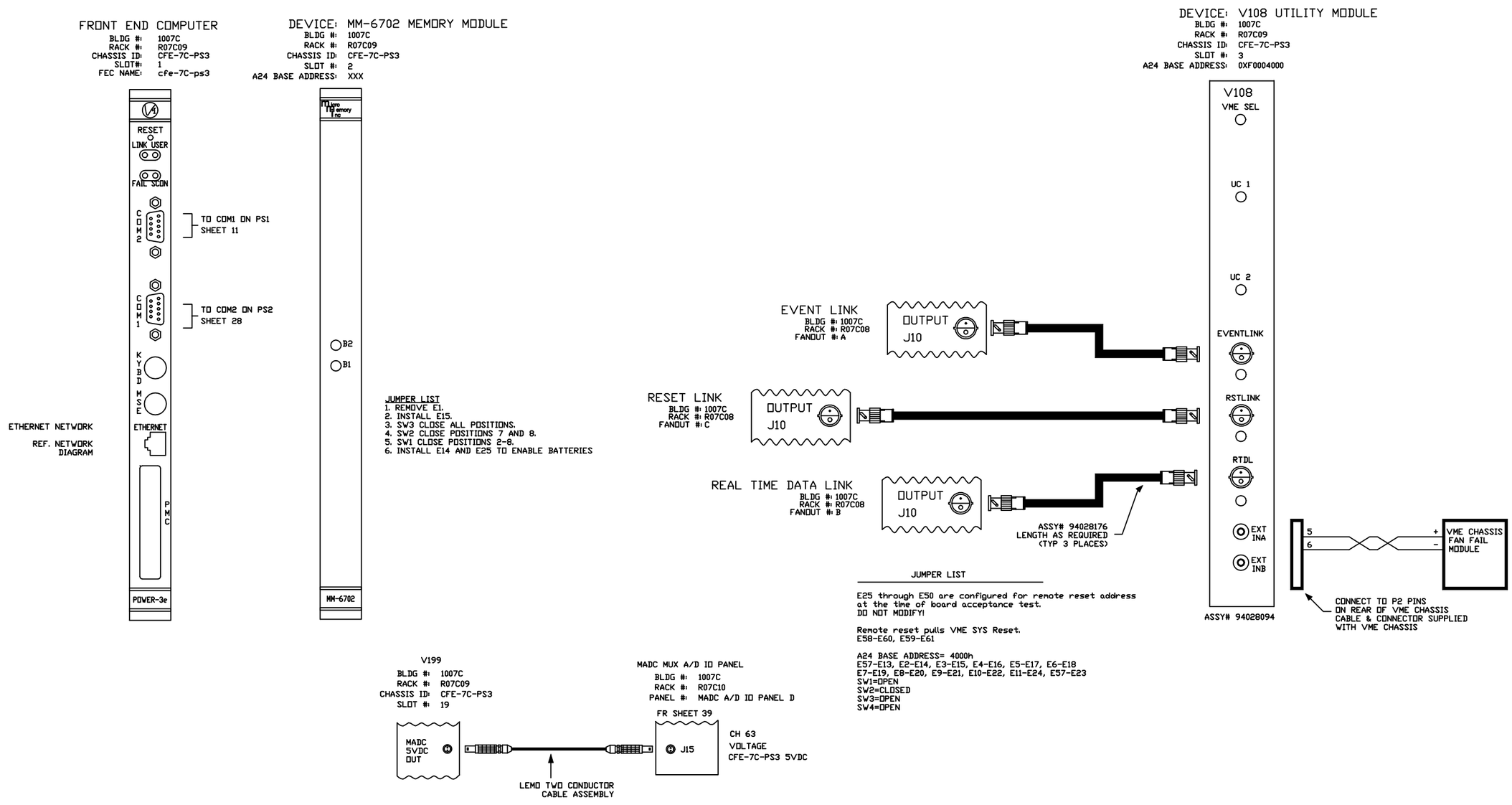

JUMPER LIST

E25 through E50 are configured for remote reset address at the time of board acceptance test.
DO NOT MODIFY!

Remote reset pulls VME SYS Reset.
E58-E60, E59-E61

A24 BASE ADDRESS= 4000h
E57-E13, E2-E14, E3-E15, E4-E16, E5-E17, E6-E18
E7-E19, E8-E20, E9-E21, E10-E22, E11-E24, E57-E23
SW1=OPEN
SW2=CLOSED
SW3=OPEN
SW4=OPEN

-3	-2	-1	REF DESIGNATOR	ITEM NO.	DESCRIPTION	MAT'L. DWG NO.,BNL NO.
QTY REQD						

INTERPRET IN GENERAL ACCORDANCE WITH ASME Y14.24M-1989

UNLESS OTHERWISE SPECIFIED DIMENSIONS ARE IN INCHES

DECIMAL TOLERANCES
.X ±.030
.XX ±.015
.XXX ±.005
ANGULAR TOLERANCE ± .5°

OUTSTANDING ECN

NA FINISH

BREAK SHARP EDGES MAX. XX MIN. XX

Q.A. CATEGORY A-3		DATE
DRAWN BY	Venegas	8/11/99
CHECKED BY		
DESIGN APPROVAL		
ENGINEER APPROVAL	R. MICHNOFF	10/21/97
SUPVR. APPROVAL		

NEXT ASSEMBLY

BROOKHAVEN NATIONAL LABORATORY
UPTON, N.Y. 11973

RHIC CONTROLS WIRING DIAGRAM

ALCOVE 1007C VME CHASSIS CFE-7C-PS3

CPU/MEMORY /V108 UTIL MODULE

SIZE D | DRAWING NUMBER 94028624 | REV. A

MATERIAL: ——— SCALE: NA WEIGHT: – SHEET 45

*AUTOCAD

ACS, BNL 8/24/00 11:24 AM 8624_46.dwg

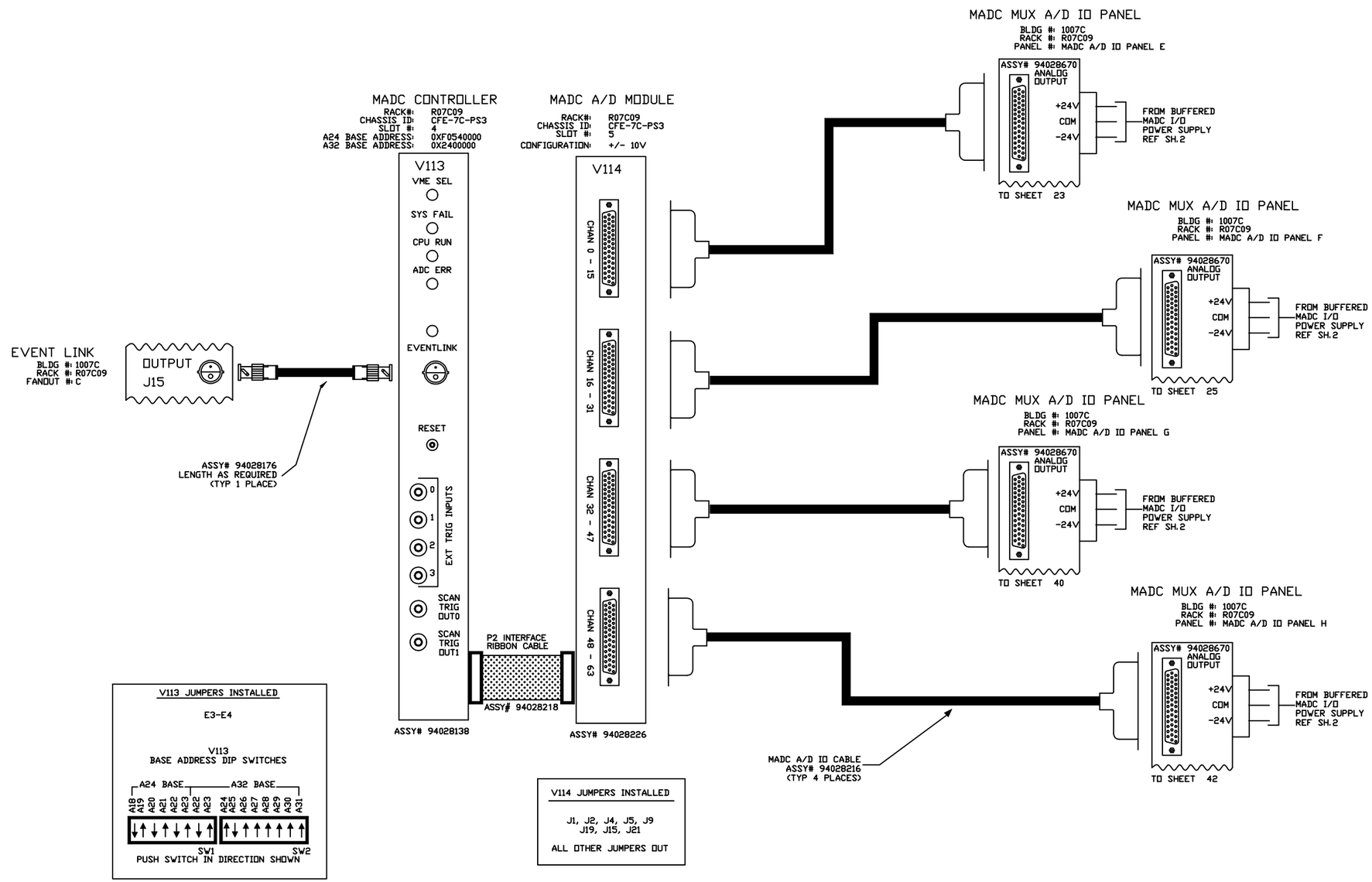

V113 JUMPERS INSTALLED

E3-E4

V113
BASE ADDRESS DIP SWITCHES

A24 BASE: A18 A19 A20 A21 A22 A23 A22 A23 — SW1
A32 BASE: A24 A25 A26 A27 A28 A29 A30 A31 — SW2

PUSH SWITCH IN DIRECTION SHOWN

V114 JUMPERS INSTALLED

J1, J2, J4, J5, J9
J19, J15, J21

ALL OTHER JUMPERS OUT

REV.	ZONE	ECN NO.	DATE	BY	CKR	APP.

-3	-2	-1	REF DESIGNATOR	ITEM NO.	DESCRIPTION	MAT'L DWG NO./BNL NO.
QTY REQD						

INTERPRET IN GENERAL ACCORDANCE WITH ASME Y14.24M-1989

UNLESS OTHERWISE SPECIFIED DIMENSIONS ARE IN INCHES

DECIMAL TOLERANCES
.X ±.030
.XX ±.015
.XXX ±.005
ANGULAR TOLERANCE
± .5°

FINISH: NA — BREAK SHARP EDGES MAX. XX MIN. XX

OUTSTANDING ECN

Q.A. CATEGORY A-3		DATE
DRAWN BY	Ed Koropsak	3/9/98
CHECKED BY		
DESIGN APPROVAL		
ENGINEER APPROVAL	R. MICHNOFF	3/9/98
SUPVR. APPROVAL		

NEXT ASSEMBLY

BROOKHAVEN NATIONAL LABORATORY
UPTON, N.Y. 11973

RHIC CONTROLS WIRING DIAGRAM
ALCOVE 1007C, VME CHASSIS CFE-7C-PS3
MADC SYSTEM

SIZE D — DRAWING NUMBER 94028624 — REV. A

MATERIAL: ——— SCALE: NA WEIGHT: – SHEET 46 OF 52

*AUTOCAD

REV.	ZONE	ECN NO.	DATE	BY	CKR	APP.

CONTROLS- 2/28/01 3:56 PM 8624_47.dwg

-3	-2	-1	REF DESIGNATOR	ITEM NO.	DESCRIPTION	MAT'L DWG NO.,SPEC NO.
QTY REQD						

INTERPRET IN GENERAL ACCORDANCE WITH ASME Y14.24M-1989

UNLESS OTHERWISE SPECIFIED DIMENSIONS ARE IN INCHES

DECIMAL TOLERANCES
.X ±.030
.XX ±.015
.XXX ±.005
ANGULAR TOLERANCE
± .5°

NA FINISH

BREAK SHARP EDGES
MAX. XX MIN. XX

OUTSTANDING ECN

Q.A. CATEGORY A-3		DATE
DRAWN BY	Ed Koropsak	3/9/98
CHECKED BY		
DESIGN APPROVAL		
ENGINEER APPROVAL	R. MICHNOFF	3/9/98
SUPVR. APPROVAL		

NEXT ASSEMBLY

BROOKHAVEN NATIONAL LABORATORY
UPTON, N.Y. 11973

RHIC CONTROLS WIRING DIAGRAM

ALCOVE 1007C CHASSIS CFE-7C-PS3

SIZE D | DRAWING NUMBER 94028624 | REV. A

MATERIAL: ——— SCALE: NA WEIGHT: – SHEET 47 OF 53

*AUTOCAD

REV.	ZONE	ECN NO.	DATE	BY	CKR	APP.

V102 DELAY MODULE
BLDG #: 1007C
RACK #: R07C09
CHASSIS ID: CFE-7C-PS3
SLOT #: 7
A16 BASE ADDRESS: 0XFFFFE600

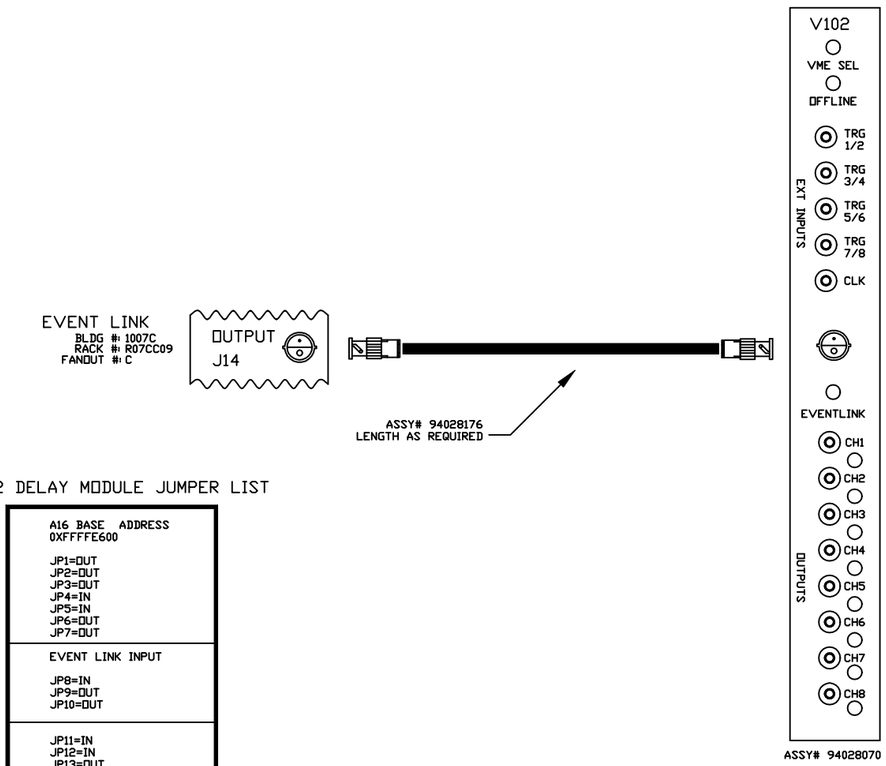

V102 DELAY MODULE JUMPER LIST

A16 BASE ADDRESS 0XFFFFE600 JP1=OUT JP2=OUT JP3=OUT JP4=IN JP5=IN JP6=OUT JP7=OUT
EVENT LINK INPUT JP8=IN JP9=OUT JP10=OUT
JP11=IN JP12=IN JP13=OUT JP14=IN

-3	-2	-1	REF DESIGNATOR	ITEM NO.	DESCRIPTION	MAT'L DWG NO.,BNL NO.
QTY REQD						

INTERPRET IN GENERAL ACCORDANCE WITH ASME Y14.24M-1989

UNLESS OTHERWISE SPECIFIED DIMENSIONS ARE IN INCHES

DECIMAL TOLERANCES
.X ±.030
.XX ±.015
.XXX ±.005
ANGULAR TOLERANCE
± .5°

OUTSTANDING ECN

NA FINISH

BREAK SHARP EDGES
MAX. XX MIN. XX

Q.A. CATEGORY A-3	DATE	
DRAWN BY	Ed Koropsak	3/9/98
CHECKED BY		
DESIGN APPROVAL		
ENGINEER APPROVAL	R. MICHNOFF	3/9/98
SUPVR. APPROVAL		

NEXT ASSEMBLY

BROOKHAVEN NATIONAL LABORATORY
UPTON, N.Y. 11973

RHIC CONTROLS WIRING DIAGRAM
ALCOVE 1007C CHASSIS CFE-7C-PS3
V102 DELAY MODULE

SIZE D
94028624
DRAWING NUMBER
REV. A

MATERIAL: ——— SCALE: NA WEIGHT: – SHEET 48 OF 52

*AUTOCAD

REV.	ZONE	ECN NO.	DATE	BY	CKR	APP.

Controls 8/12/99 9:58 AM 8624_51.dwg

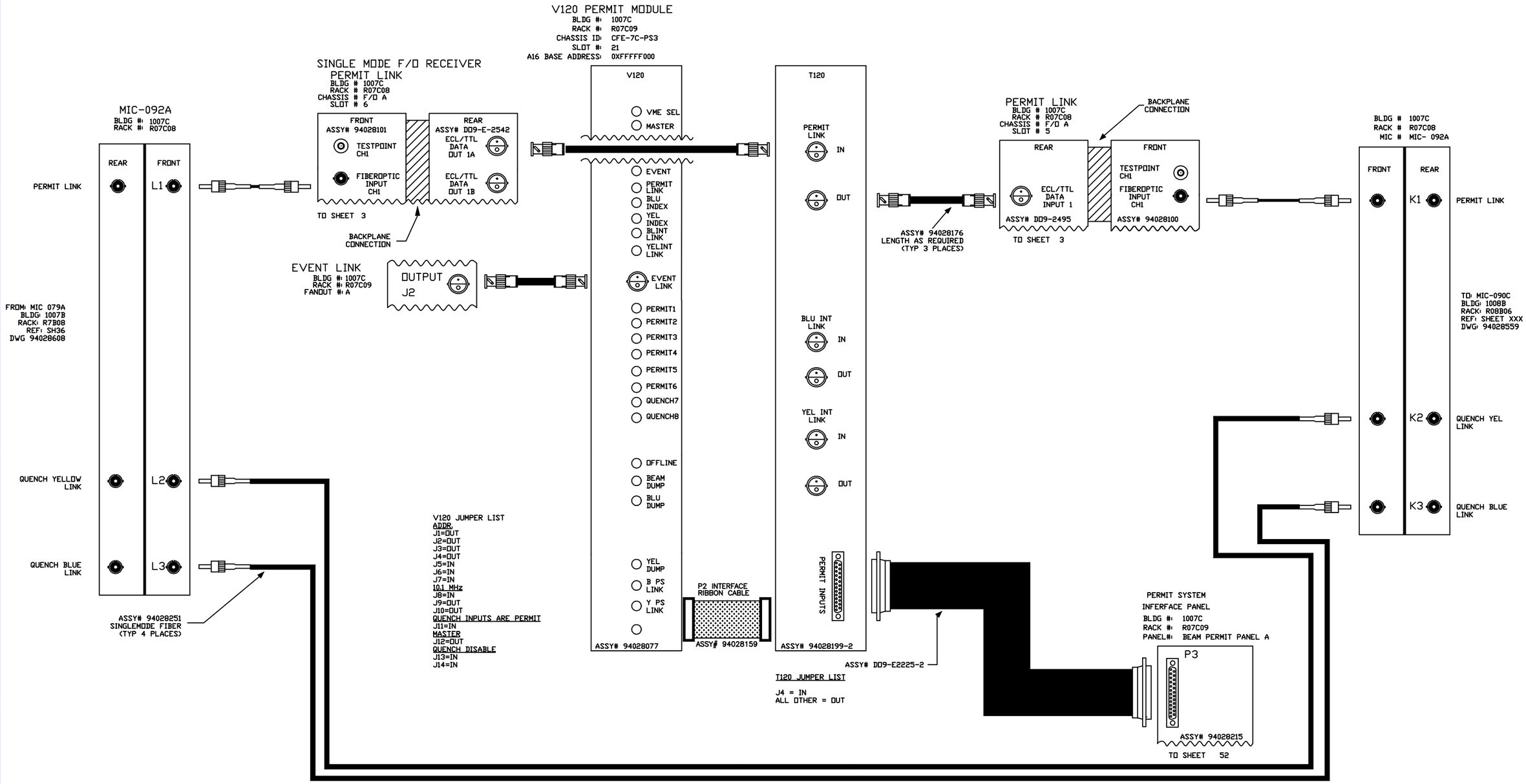

-3	-2	-1	REF DESIGNATOR	ITEM NO.	DESCRIPTION	MAT'L DWG NO./BNL NO.
QTY REQD						

INTERPRET IN GENERAL ACCORDANCE WITH ASME Y14.24M-1989

UNLESS OTHERWISE SPECIFIED DIMENSIONS ARE IN INCHES

DECIMAL TOLERANCES
.X ±.030
.XX ±.015
.XXX ±.005
ANGULAR TOLERANCE
± .5°

NA FINISH

BREAK SHARP EDGES
MAX. XX MIN. XX

OUTSTANDING ECN

Q.A. CATEGORY A-3		DATE
DRAWN BY	Venegas	8/12/99
CHECKED BY		
DESIGN APPROVAL		
ENGINEER APPROVAL	R. MICHNOFF	11/4/97
SUPVR. APPROVAL		

NEXT ASSEMBLY

BROOKHAVEN NATIONAL LABORATORY
UPTON, N.Y. 11973

RHIC CONTROLS WIRING DIAGRAM

ALCOVE 1007C, CHASSIS CFE-7C-PS3

V120/T120 PERMIT SYSTEM

SIZE D — 94028624 — REV. A

DRAWING NUMBER

MATERIAL: ——— SCALE: NA WEIGHT: – SHEET 51 OF XX

1 *AUTOCAD

REV.	ZONE	ECN NO.	DATE	BY	CKR	APP.

CONTROLS- 6/2/03 10:50 AM 8624_52.dwg

PERMIT SYSTEM INTERFACE MODULE

BLDG #: 1007C
RACK #: R07C09
PANEL #: PERMIT I/F PANEL A

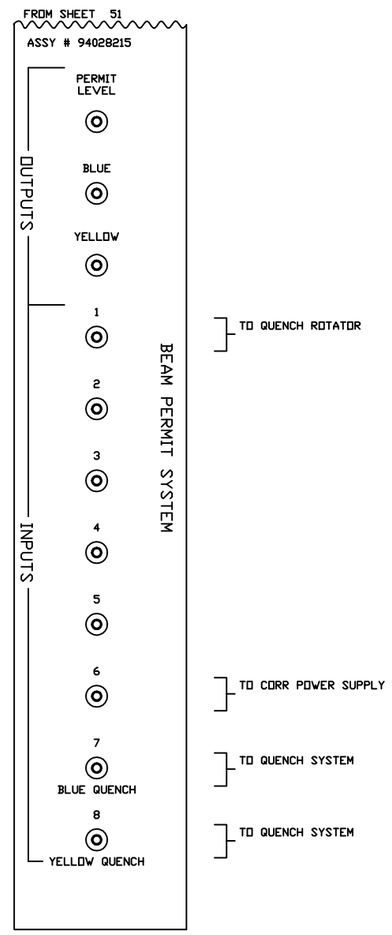

-3	-2	-1	REF DESIGNATOR	ITEM NO.	DESCRIPTION	MAT'L. DWG NO./BNL NO.
QTY REQD						

INTERPRET IN GENERAL ACCORDANCE WITH ASME Y14.24M-1989

UNLESS OTHERWISE SPECIFIED DIMENSIONS ARE IN INCHES

DECIMAL TOLERANCES
.X ±.030
.XX ±.015
.XXX ±.005
ANGULAR TOLERANCE ± .5°

NA FINISH

BREAK SHARP EDGES MAX. XX MIN. XX

OUTSTANDING ECN

Q.A. CATEGORY A-3		DATE
DRAWN BY	Ed Koropsak	3/9/98
CHECKED BY		
DESIGN APPROVAL		
ENGINEER APPROVAL	R. MICHNOFF	3/9/98
SUPVR. APPROVAL		

NEXT ASSEMBLY

BROOKHAVEN NATIONAL LABORATORY
UPTON, N.Y. 11973

RHIC CONTROLS WIRING DIAGRAM
ALCOVE 1007C, RACK R07C09
PERMIT SYSTEM INTERFACE PANEL

SIZE D | DRAWING NUMBER 94028624 | REV. A

MATERIAL: ——— SCALE: NA WEIGHT: – SHEET 52

*AUTOCAD

REV.	ZONE	ECN NO.	DATE	BY	CKR	APP.

VMIVME 4122 ANALOG OUTPUT MODULE

BLDG #: 1007C
RACK #: R07C09
CHASSIS ID: CFE-7C-PS3
SLOT #: 20
A16 BASE ADDRESS: 0x0200
CONFIGURATION: -10 TO +10 VOLTS

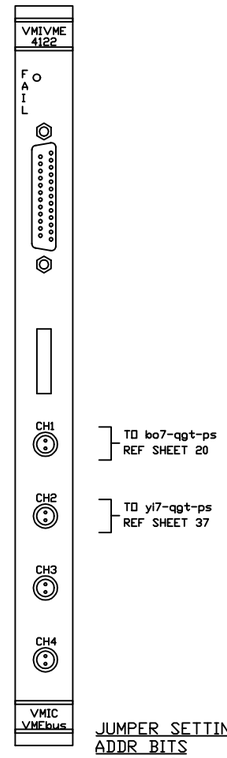

TO bo7-qgt-ps
REF SHEET 20

TO yi7-qgt-ps
REF SHEET 37

JUMPER SETTINGS

ADDR BITS	-10V TO +10V
E11 (A7): IN	E1: 2-3
E12 (A8): IN	E3: 2-3
E13 (A9): OUT	E4: OUT
E14 (A10): IN	E5: OUT
E15 (A11): IN	E6: 2-3
E16 (A12): IN	E7: 2-3
E17 (A13): IN	E8: 1-2
E18 (A14): IN	E9: OUT
E19 (A15): IN	E10: OUT

NOTE: PIN 1 OF JUMPERS IS DESIGNATED BY A SQUARE PAD ON THE SOLDER SIDE OF THE BOARD

-3	-2	-1	REF DESIGNATOR	ITEM NO.	DESCRIPTION	MAT'L. DWG NO.,SPEC. NO.
QTY REQD						

INTERPRET IN GENERAL ACCORDANCE WITH ASME Y14.24M-1989

UNLESS OTHERWISE SPECIFIED DIMENSIONS ARE IN INCHES
DECIMAL TOLERANCES
.X ±.030
.XX ±.015
.XXX ±.005
ANGULAR TOLERANCE
± .5°

NA FINISH
BREAK SHARP EDGES
MAX. XX MIN. XX

OUTSTANDING ECN

Q.A. CATEGORY A-3		DATE
DRAWN BY	Ed Koropsak	11/29/99
CHECKED BY		
DESIGN APPROVAL		
ENGINEER APPROVAL	R. MICHNOFF	11/29/99
SUPVR. APPROVAL		
NEXT ASSEMBLY		

BROOKHAVEN NATIONAL LABORATORY
UPTON, N.Y. 11973

C-A CONTROLS WIRING DIAGRAM
ALCOVE 1007C, RACK R07C09
GAMMA-T ANALOG SIGNAL

SIZE D
DRAWING NUMBER 94028624
REV. A

MATERIAL: ——— SCALE: NA WEIGHT: – SHEET 53

*AUTOCAD

REV.	ZONE	ECN NO.	DATE	BY	CKR	APP.

CONTROLS- 6/17/03 1:20 PM 8624_54.dwg

MADC MUX A/D IO PANEL
BLDG #: 1007C
RACK #: R07C09
PANEL #: MADC A/D IO PANEL B
FR SHEET 17
J15
CHAN 31
SPARE

MADC MUX A/D IO PANEL
BLDG #: 1007C
RACK #: R07C10
PANEL #: MADC A/D IO PANEL A
FR SHEET 32
J15
CHAN 15
SPARE

MADC MUX A/D IO PANEL
BLDG #: 1007C
RACK #: R07C10
PANEL #: MADC A/D IO PANEL B
FR SHEET 34
J15
CHAN 31
SPARE

MADC MUX A/D IO PANEL
BLDG #: 1007C
RACK #: R07C09
PANEL #: MADC A/D IO PANEL G
FR SHEET 42
J15
CHAN 47
SPARE

-3	-2	-1	REF DESIGNATOR	ITEM NO.	DESCRIPTION	MAT'L. DWG NO.,SPEC. NO.
QTY REQD						

INTERPRET IN GENERAL ACCORDANCE WITH ASME Y14.24M-1989

UNLESS OTHERWISE SPECIFIED DIMENSIONS ARE IN INCHES

DECIMAL TOLERANCES
.X ±.030
.XX ±.015
.XXX ±.005
ANGULAR TOLERANCE
± .5°

NA FINISH

BREAK SHARP EDGES
MAX. XX MIN. XX

OUTSTANDING ECN

Q.A. CATEGORY A-3		DATE
DRAWN BY	Phil Pape	10/31/97
CHECKED BY		
DESIGN APPROVAL		
ENGINEER APPROVAL	R. MICHNOFF	10/31/97
SUPVR. APPROVAL		
NEXT ASSEMBLY		

BROOKHAVEN NATIONAL LABORATORY
UPTON, N.Y. 11973

RHIC CONTROLS WIRING DIAGRAM
ALCOVE 1007C
SPARE MADC INPUTS

SIZE D
DRAWING NUMBER 94028624
REV. A

MATERIAL: ——— SCALE: NA WEIGHT: – SHEET 54

*AUTOCAD