RHIC Accelerator Controls Section
Bldg. 1005E Wiring Diagrams
BNL Drawing Number 94028263

Brookhaven National Laboratory, Upton, New York 11973

Created By: Ed Koropsak
Last Updated 10/5/99

Power Distribution
- Rack R5B-4, R5B-5 (Sheet 1)
- Rack 5B-1, 5C-3 (Sheet 2)

SPARES
- MADC Channels (Sheet 13)
- F/O Channels (Sheet 3)

Serial Links
- Event Link (Sheet 4,5)
- Real Time Data Link (RTDL) (Sheet 6,7)
- Reset Link (Sheet 8)
- Beam Sync Yellow Link (Sheet 9)
- Beam Sync Blue Link (Sheet 10)

VME Chassis CFE-5E-PS1 modules
- Front End Computer, V108 Utility Module (Sheet 11)
- V113/V114 MADC System (Sheet 12)
- V115 WFG A: YTH5, YTV6 (Sheet 14)
- V115 WFG B: YTH7, YTV8 (Sheet 15)
- V115 WFG C: YTH9, YTV10 (Sheet 16)
- V115 WFG D: YD31T, YLAMT (Sheet 17)
- V115 WFG E: YQ1, YQ2 (Sheet 18)
- V115 WFG F: YQ3, YQ4 (Sheet 19)
- V115 WFG G: YQ5, YQ6 (Sheet 20)
- V115 WFG H: YP1 (Sheet 21)
- V115 WFG I: INJECTION KICKER (Sheet 22)

VME Chassis CFE-5E-PS2 modules
- Front End Computer, V108 Utility Module (Sheet 23)
- ALLEN BRADLEY PLC System (Sheet 24)
- GPIB 488 FOR INJECTION KICKER (Sheet 25)
- V102 DELAY MODULE (Sheet 26)
- V194 PULSE FANOUT (Sheet 29)
- V120 RHIC PERMIT SYSTEM (Sheet 30)
- V120 PERMIT SYSTEM INTERFACE A(Sheet 31)
- V120 XFER PERMIT SYSTEM (Sheet 34)
- V120 PERMIT SYSTEM INTERFACE B(Sheet 35)
- V124, V190 Injection Backup Pluse (Sheet 26)

VME Chassis CFE-5E-INST1 modules
- Front End Computer, V108 Utility Module (Sheet 32)

VME Chassis CFE-5E-BPM1 modules
- Front End Computer, V108 Utility Module (Sheet 33)

NOTE: Sheets 27, 28 are blank.

REV.	ZONE	ECN NO.	DATE	BY	CKR	APP.

ACS, BNL 10/7/99 9:29 AM 8263_01.dwg

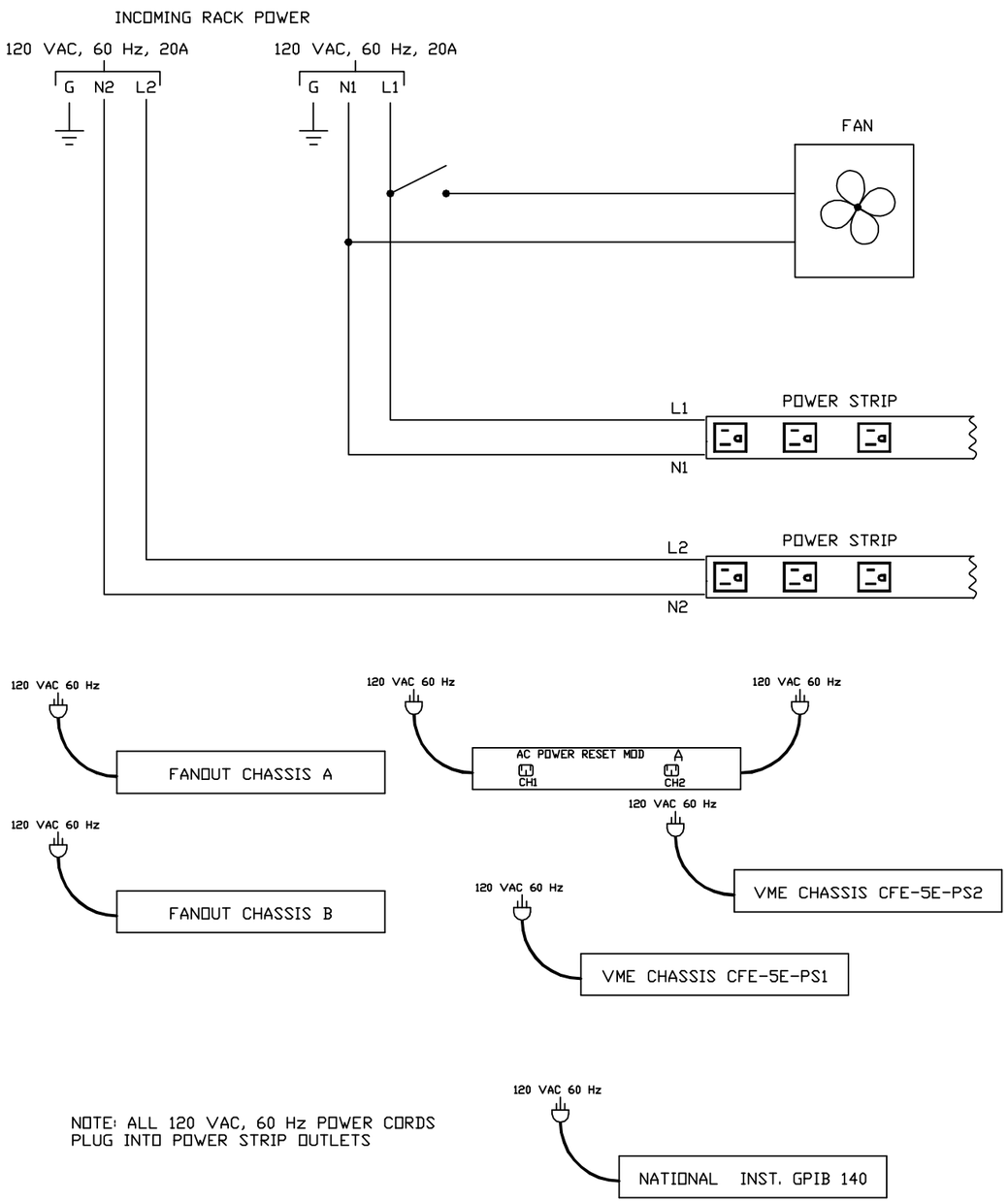

NOTE: ALL 120 VAC, 60 Hz POWER CORDS
PLUG INTO POWER STRIP OUTLETS

RACK 5B-4

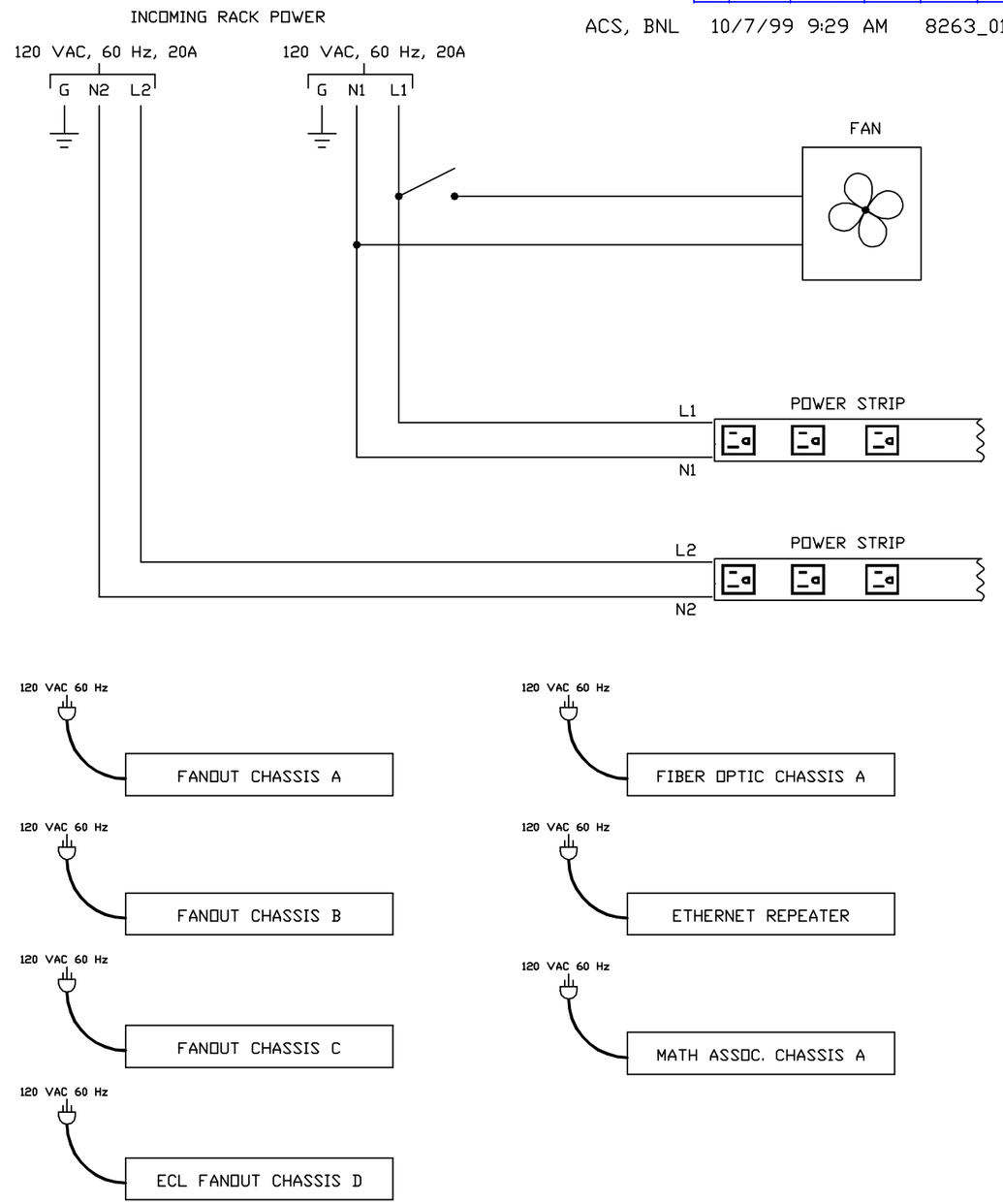

NOTE: ALL 120 VAC, 60 Hz POWER CORDS
PLUG INTO POWER STRIP OUTLETS

RACK 5B-5

-3	-2	-1	REF DESIGNATOR	ITEM NO.	DESCRIPTION	MAT'L DWG NO.,BNL NO.
QTY REQD						

INTERPRET IN GENERAL ACCORDANCE WITH ASME Y14.24M-1989
UNLESS OTHERWISE SPECIFIED DIMENSIONS ARE IN INCHES
DECIMAL TOLERANCES .X ±.030 .XX ±.015 .XXX ±.005
ANGULAR TOLERANCE ± .5°
OUTSTANDING ECN
NA FINISH
BREAK SHARP EDGES MAX. XX MIN. XX

Q.A. CATEGORY A-3		DATE
DRAWN BY	Phil Pape	4/14/97
CHECKED BY		
DESIGN APPROVAL		
ENGINEER APPROVAL	R. MICHNOFF	05/13/97
SUPVR. APPROVAL		
NEXT ASSEMBLY		

BROOKHAVEN NATIONAL LABORATORY
UPTON, N.Y. 11973
RHIC CONTROLS WIRING DIAGRAM
BLDG. 1005E, RACK 5B-4, 5B-5
POWER DISTRIBUTION

SIZE D | DRAWING NUMBER 94028263 | REV. A

MATERIAL: ——— SCALE: NA WEIGHT: – SHEET 1 OF 35

*AUTOCAD

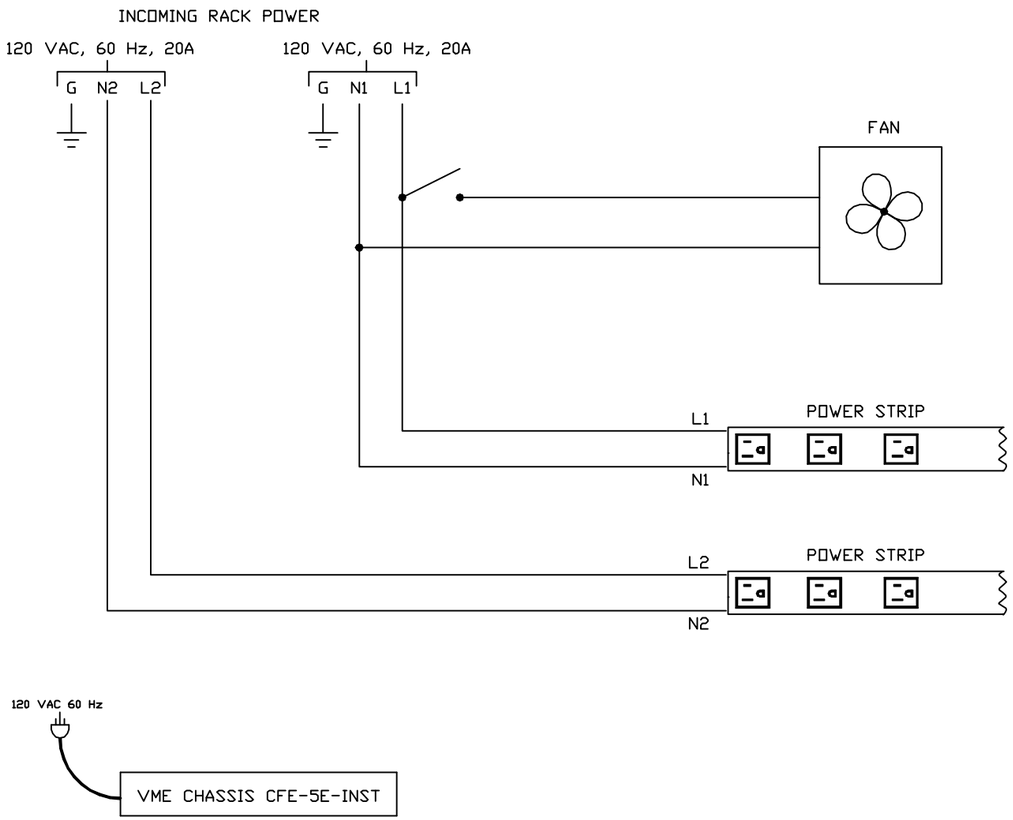

NOTE: ALL 120 VAC, 60 Hz POWER CORDS
PLUG INTO POWER STRIP OUTLETS

RACK 5B-1

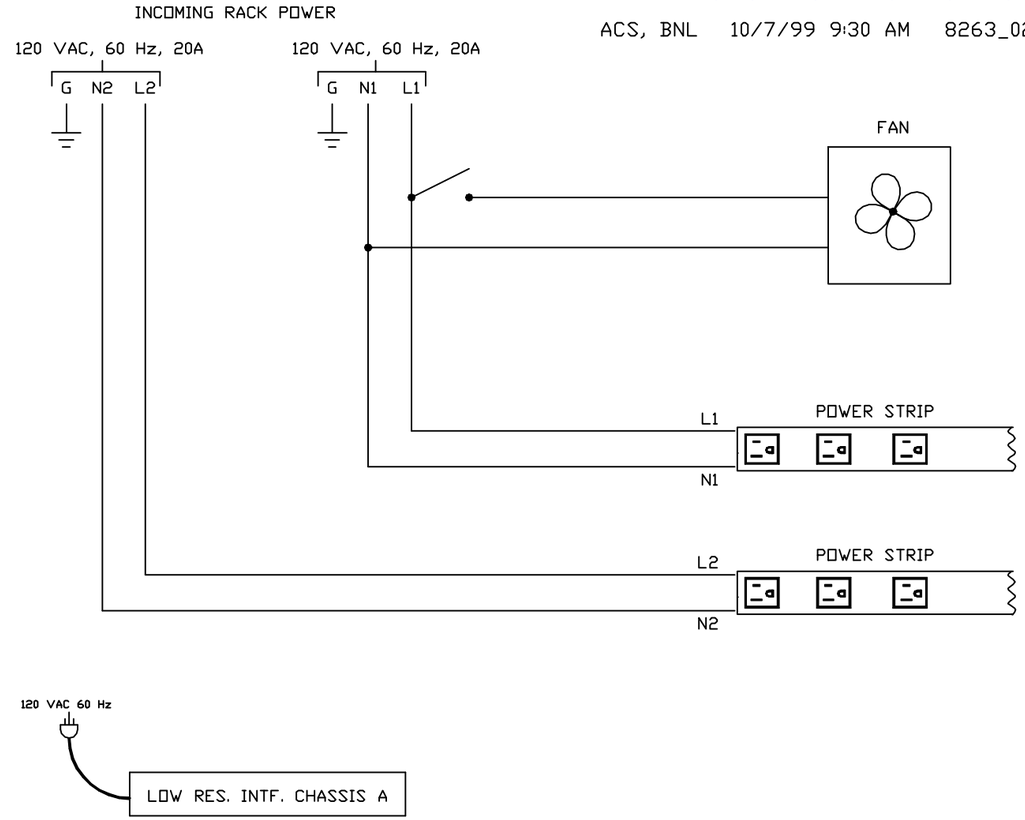

NOTE: ALL 120 VAC, 60 Hz POWER CORDS
PLUG INTO POWER STRIP OUTLETS

RACK 5C-3

REV.	ZONE	ECN NO.	DATE	BY	CKR	APP.

ACS, BNL 10/7/99 9:30 AM 8263_02.dwg

-3	-2	-1	REF DESIGNATOR	ITEM NO.	DESCRIPTION	MAT'L DWG NO./BNL NO.
QTY REQD						

INTERPRET IN GENERAL ACCORDANCE WITH ASME Y14.24M-1989

UNLESS OTHERWISE SPECIFIED DIMENSIONS ARE IN INCHES

DECIMAL TOLERANCES
.X ±.030
.XX ±.015
.XXX ±.005
ANGULAR TOLERANCE
± .5°

NA FINISH

BREAK SHARP EDGES
MAX. XX MIN. XX

OUTSTANDING ECN

Q.A. CATEGORY A-3		DATE
DRAWN BY	Phil Pape	4/15/97
CHECKED BY		
DESIGN APPROVAL		
ENGINEER APPROVAL	R. MICHNOFF	05/13/97
SUPVR. APPROVAL		

NEXT ASSEMBLY

BROOKHAVEN NATIONAL LABORATORY
UPTON, N.Y. 11973

RHIC CONTROLS WIRING DIAGRAM
BLDG. 1005E, RACK 5B-1, 5C-3
POWER DISTRIBUTION

SIZE D | DRAWING NUMBER 94028263 | REV. A

MATERIAL: ——— | SCALE: NA | WEIGHT: – | SHEET 2 OF 35

*AUTOCAD

REV.	ZONE	ECN NO.	DATE	BY	CKR	APP.

ACS, BNL 10/4/99 3:38 PM 8263_03.dwg

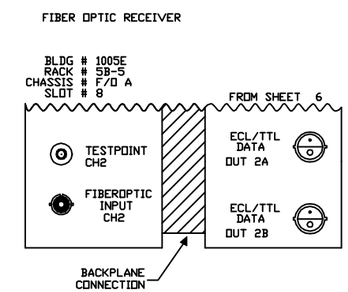

-3	-2	-1	REF DESIGNATOR	ITEM NO.	DESCRIPTION	MAT'L DWG NO./BNL NO.
QTY REQD						

INTERPRET IN GENERAL ACCORDANCE WITH ASME Y14.24M-1989

UNLESS OTHERWISE SPECIFIED DIMENSIONS ARE IN INCHES

DECIMAL TOLERANCES
.X ±.030
.XX ±.015
.XXX ±.005
ANGULAR TOLERANCE
± .5°

NA FINISH

BREAK SHARP EDGES
MAX. XX MIN. XX

OUTSTANDING ECN

Q.A. CATEGORY A-3		DATE
DRAWN BY	Phil Pape	4/15/97
CHECKED BY		
DESIGN APPROVAL		
ENGINEER APPROVAL	R. MICHNOFF	05/13/97
SUPVR. APPROVAL		

NEXT ASSEMBLY

BROOKHAVEN NATIONAL LABORATORY
UPTON, N.Y. 11973

RHIC CONTROLS WIRING DIAGRAM
BLDG. 1005E
SPARE F/O RCVR/XMIT CHANNELS

SIZE D | DRAWING NUMBER 94028263 | REV. A

MATERIAL: ——— | SCALE: NA | WEIGHT: – | SHEET 3 OF X

*AUTOCAD

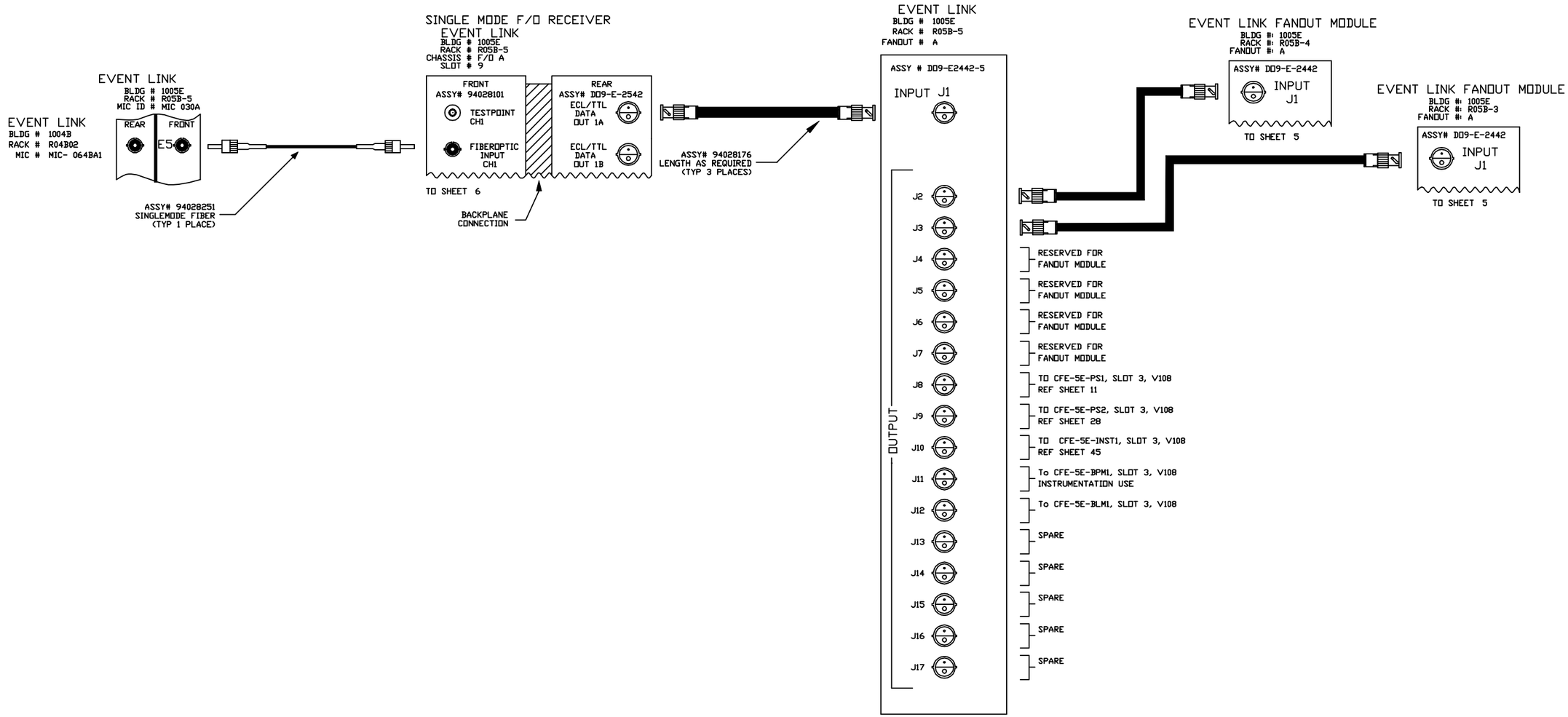

-3	-2	-1	REF DESIGNATOR	ITEM NO.	DESCRIPTION	MAT'L DWG NO./BNL NO.
QTY REQD						

INTERPRET IN GENERAL ACCORDANCE WITH ASME Y14.24M-1989

UNLESS OTHERWISE SPECIFIED DIMENSIONS ARE IN INCHES

DECIMAL TOLERANCES
.X ±.030
.XX ±.015
.XXX ±.005
ANGULAR TOLERANCE
± .5°

NA FINISH

BREAK SHARP EDGES
MAX. XX MIN. XX

OUTSTANDING ECN

Q.A. CATEGORY A-3		DATE	BROOKHAVEN NATIONAL LABORATORY UPTON, N.Y. 11973
DRAWN BY	Ed Koropsak	9/28/99	RHIC CONTROLS WIRING DIAGRAM
CHECKED BY			BLDG. 1005E
DESIGN APPROVAL			EVENT LINK
ENGINEER APPROVAL	R. MICHNOFF	9/28/99	
SUPVR. APPROVAL			

NEXT ASSEMBLY

SIZE D | DRAWING NUMBER 94028263 | REV. A

MATERIAL: ——— | SCALE: NA | WEIGHT: – | SHEET 4 OF 35

*AUTOCAD

ACS, BNL 10/7/99 9:42 AM 8263_05.dwg

REV.	ZONE	ECN NO.	DATE	BY	CKR	APP.

EVENT LINK FANOUT MODULE

BLDG # 1005E
RACK # R5B-4
FANOUT # A

FROM SHEET 4

ASSY # D09-E2442-5

OUTPUT

J2	SPARE
J3	SPARE
J4	SPARE
J5	To CFE-5E-PS1, SLOT 16, T115 REF SHEET 22
J6	To CFE-5E-PS1, SLOT 15, T115 REF SHEET 21
J7	To CFE-5E-PS1, SLOT 14, T115 REF SHEET 20
J8	To CFE-5E-PS1, SLOT 13, T115 REF SHEET 19
J9	To CFE-5E-PS1, SLOT 12, T115 REF SHEET 18
J10	To CFE-5E-PS1, SLOT 11, T115 REF SHEET 17
J11	To CFE-5E-PS1, SLOT 10, T115 REF SHEET 16
J12	To CFE-5E-PS1, SLOT 9, T115 REF SHEET 15
J13	To CFE-5E-PS1, SLOT 8, T115 REF SHEET 14
J14	SPARE
J15	SPARE
J16	SPARE
J17	SPARE

EVENT LINK FANOUT MODULE

BLDG # 1005E
RACK # R5B-3
FANOUT # A

FROM SHEET 4

ASSY # D09-E2442-5

OUTPUT

J2	SPARE
J3	SPARE
J4	SPARE
J5	SPARE
J6	SPARE
J7	SPARE
J8	TO INST. FANOUT R5B-2
J9	TO CFE-5E-PS2, SLOT 19, V120 REF SHEET 34
J10	TO CFE-5E-PS2, SLOT 21, V120 REF SHEET 30
J11	TO CFE-5E-BLM1, SLOT 13, V118
J12	TO CFE-5E-INST1, SLOT 9, V113
J13	TO CFE-5E-BLM1, SLOT 6, V113
J14	TO CFE-5E-PS1, SLOT 4, V113 REF SHEET 12
J15	TO CFE-5E-INST1, SLOT 11, V102 REF SHEET X
J16	TO CFE-5E-INST1, SLOT 10, V102 REF SHEET X
J17	TO CFE-5E-PS2, SLOT 7, V102 REF SHEET 26

-3	-2	-1	REF DESIGNATOR	ITEM NO.	DESCRIPTION	MAT'L. DWG NO.,BNL NO.
QTY REQD						

INTERPRET IN GENERAL ACCORDANCE WITH ASME Y14.24M-1989

UNLESS OTHERWISE SPECIFIED DIMENSIONS ARE IN INCHES

DECIMAL TOLERANCES
.X ±.030
.XX ±.015
.XXX ±.005
ANGULAR TOLERANCE ± .5°

OUTSTANDING ECN

NA FINISH

BREAK SHARP EDGES MAX. XX MIN. XX

Q.A. CATEGORY A-3		DATE
DRAWN BY	Ed Koropsak	9/28/99
CHECKED BY		
DESIGN APPROVAL		
ENGINEER APPROVAL	R. MICHNOFF	9/28/99
SUPVR. APPROVAL		

NEXT ASSEMBLY

BROOKHAVEN NATIONAL LABORATORY
UPTON, N.Y. 11973

RHIC CONTROLS WIRING DIAGRAM
BLDG. 1005E
EVENT LINK

SIZE D | DRAWING NUMBER 94028263 | REV. A

MATERIAL: ——— SCALE: NA WEIGHT: – SHEET 5 OF 35

*AUTOCAD

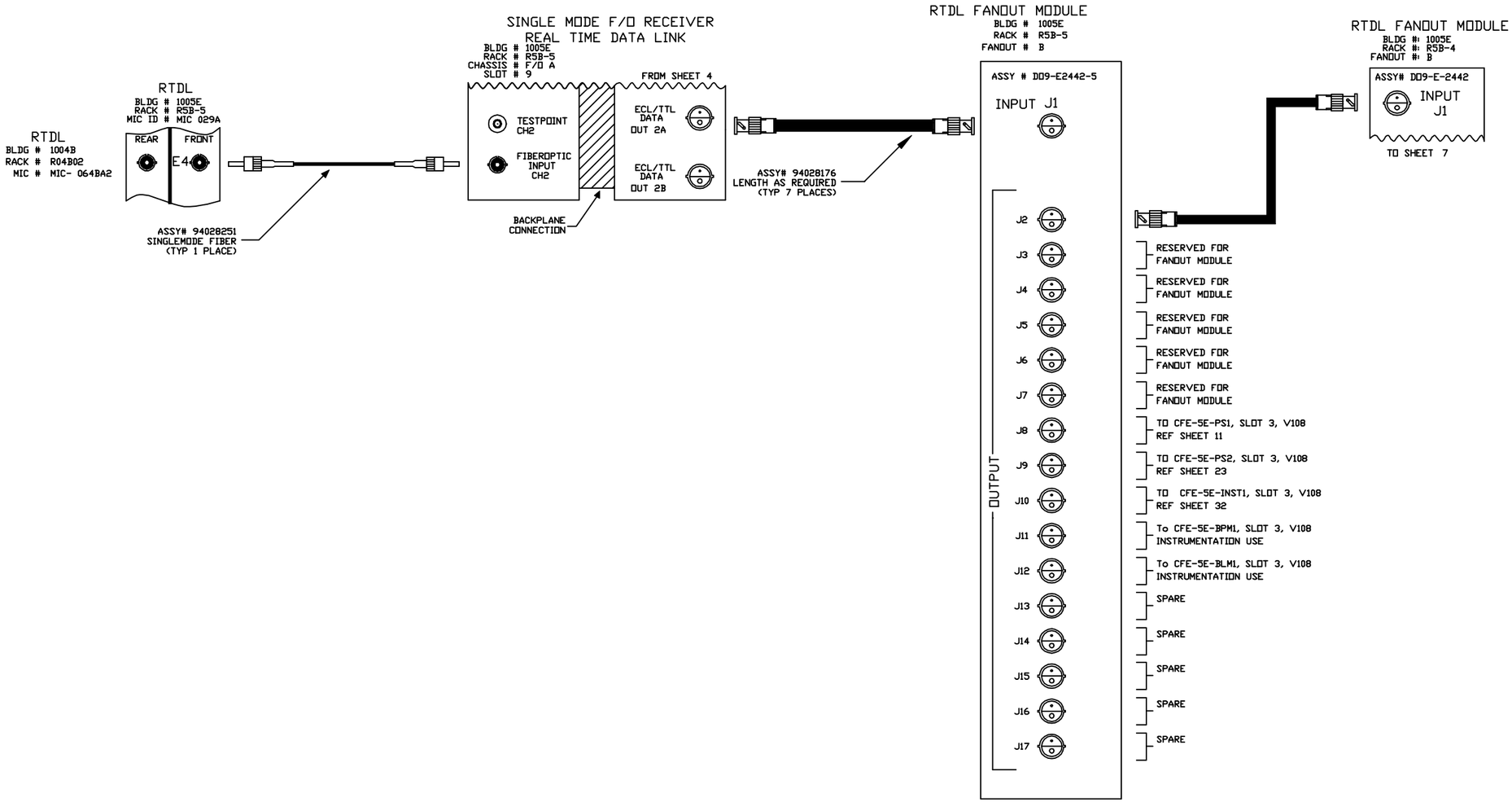

-3	-2	-1	REF DESIGNATOR	ITEM NO.	DESCRIPTION	MAT'L DWG NO./BNL NO.
QTY REQD						

INTERPRET IN GENERAL ACCORDANCE WITH ASME Y14.24M-1989

UNLESS OTHERWISE SPECIFIED DIMENSIONS ARE IN INCHES

DECIMAL TOLERANCES
.X ±.030
.XX ±.015
.XXX ±.005
ANGULAR TOLERANCE
± .5°

NA FINISH

BREAK SHARP EDGES
MAX. XX MIN. XX

OUTSTANDING ECN

Q.A. CATEGORY A-3		DATE
DRAWN BY	Ed Koropsak	9/28/99
CHECKED BY		
DESIGN APPROVAL		
ENGINEER APPROVAL	R. MICHNOFF	9/28/99
SUPVR. APPROVAL		

NEXT ASSEMBLY

BROOKHAVEN NATIONAL LABORATORY
UPTON, N.Y. 11973

RHIC CONTROLS WIRING DIAGRAM

BLDG. 1005E

REAL TIME DATA LINK

SIZE D | DRAWING NUMBER 94028263 | REV. A

MATERIAL: ——— | SCALE: NA | WEIGHT: – | SHEET 6 OF 35

*AUTOCAD

REV.	ZONE	ECN NO.	DATE	BY	CKR	APP.

ACS, BNL 10/4/99 3:54 PM 8263_07.dwg

RTDL FANOUT MODULE
BLDG # 1005E
RACK # R5B-4
FANOUT # B

FROM SHEET 6

ASSY # D09-E2442-5

OUTPUT

J2	SPARE
J3	SPARE
J4	SPARE
J5	To CFE-5E-PS1, SLOT 16, T115 REF SHEET 22
J6	To CFE-5E-PS1, SLOT 15, T115 REF SHEET 21
J7	To CFE-5E-PS1, SLOT 14, T115 REF SHEET 20
J8	To CFE-5E-PS1, SLOT 13, T115 REF SHEET 19
J9	To CFE-5E-PS1, SLOT 12, T115 REF SHEET 18
J10	To CFE-5E-PS1, SLOT 11, T115 REF SHEET 17
J11	To CFE-5E-PS1, SLOT 10, T115 REF SHEET 16
J12	To CFE-5E-PS1, SLOT 9, T115 REF SHEET 15
J13	To CFE-5E-PS1, SLOT 8, T115 REF SHEET 14
J14	SPARE
J15	SPARE
J16	SPARE
J17	SPARE

-3	-2	-1	REF DESIGNATOR	ITEM NO.	DESCRIPTION	MAT'L. DWG NO.,BNL NO.
QTY REQD						

INTERPRET IN GENERAL ACCORDANCE WITH ASME Y14.24M-1989

UNLESS OTHERWISE SPECIFIED DIMENSIONS ARE IN INCHES

DECIMAL TOLERANCES
.X ±.030
.XX ±.015
.XXX ±.005
ANGULAR TOLERANCE ± .5°

OUTSTANDING ECN

NA FINISH

BREAK SHARP EDGES
MAX. XX MIN. XX

Q.A. CATEGORY A-3

		DATE
DRAWN BY	Ed Koropsak	9/29/99
CHECKED BY		
DESIGN APPROVAL		
ENGINEER APPROVAL	R. MICHNOFF	9/29/99
SUPVR. APPROVAL		

NEXT ASSEMBLY

BROOKHAVEN NATIONAL LABORATORY
UPTON, N.Y. 11973

RHIC CONTROLS WIRING DIAGRAM
BLDG. 1005E

REAL TIME DATA LINK

SIZE D
DRAWING NUMBER 94028263
REV. A

MATERIAL: ——— SCALE: NA WEIGHT: – SHEET 7 OF 35

*AUTOCAD

REV.	ZONE	ECN NO.	DATE	BY	CKR	APP.

ACS, BNL 10/7/99 9:51 AM 8263_08.dwg

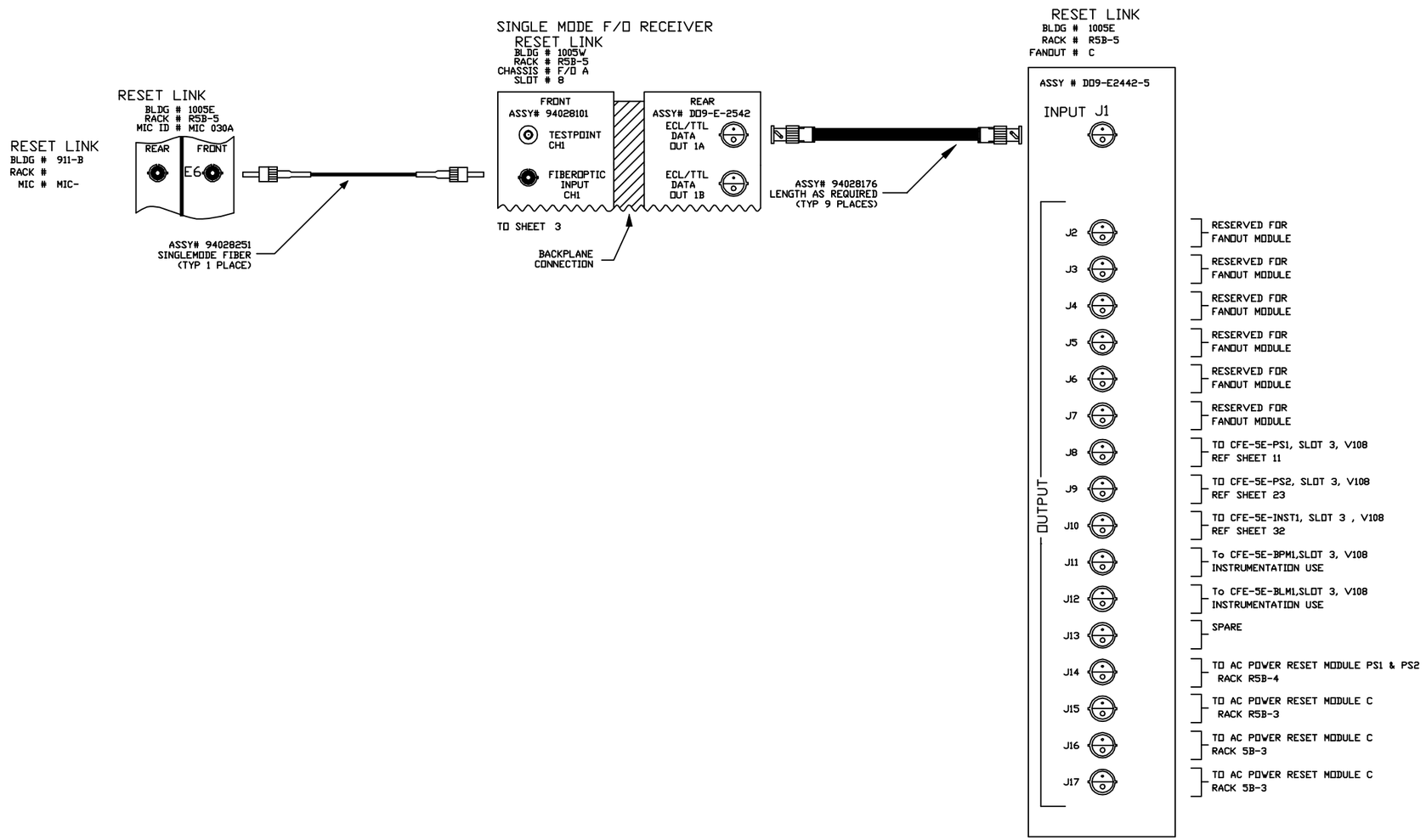

-3	-2	-1	REF DESIGNATOR	ITEM NO.	DESCRIPTION	MAT'L DWG NO./BNL NO.
QTY REQD						

INTERPRET IN GENERAL ACCORDANCE WITH ASME Y14.24M-1989

UNLESS OTHERWISE SPECIFIED DIMENSIONS ARE IN INCHES

DECIMAL TOLERANCES
.X ±.030
.XX ±.015
.XXX ±.005
ANGULAR TOLERANCE
± .5°

NA FINISH — BREAK SHARP EDGES MAX. XX MIN. XX

OUTSTANDING ECN

Q.A. CATEGORY A-3		DATE
DRAWN BY	Koropsak	9/29/99
CHECKED BY		
DESIGN APPROVAL		
ENGINEER APPROVAL	R. MICHNOFF	9/29/99
SUPVR. APPROVAL		

NEXT ASSEMBLY

BROOKHAVEN NATIONAL LABORATORY
UPTON, N.Y. 11973

RHIC CONTROLS WIRING DIAGRAM

BLDG. 1005E

RESET LINK

SIZE D — DRAWING NUMBER **94028263** — REV. A

MATERIAL: ——— SCALE: NA WEIGHT: – SHEET 8 OF 35

*AUTOCAD

ACS, BNL 10/7/99 9:58 AM 8263_09.dwg

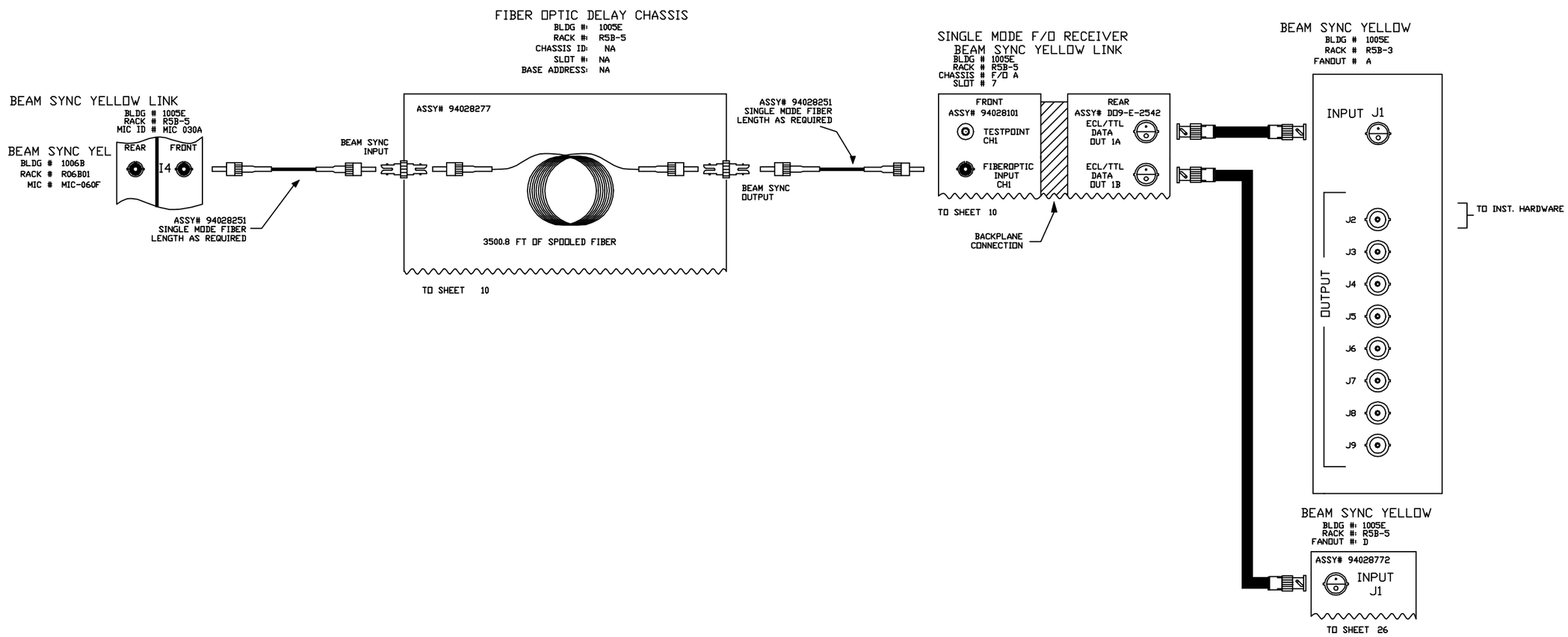

-3	-2	-1	REF DESIGNATOR	ITEM NO.	DESCRIPTION	MAT'L DWG NO.,BNL NO.
QTY REQD						

INTERPRET IN GENERAL ACCORDANCE WITH ASME Y14.24M-1989

UNLESS OTHERWISE SPECIFIED DIMENSIONS ARE IN INCHES

DECIMAL TOLERANCES
.X ±.030
.XX ±.015
.XXX ±.005
ANGULAR TOLERANCE
± .5°

NA FINISH

BREAK SHARP EDGES
MAX. XX MIN. XX

OUTSTANDING ECN

Q.A. CATEGORY A-3		DATE
DRAWN BY	Ed Koropsak	9/29/99
CHECKED BY		
DESIGN APPROVAL		
ENGINEER APPROVAL	R. MICHNOFF	9/29/99
SUPVR. APPROVAL		

NEXT ASSEMBLY

BROOKHAVEN NATIONAL LABORATORY
UPTON, N.Y. 11973

RHIC CONTROLS WIRING DIAGRAM
BLDG. 1005E
BEAM SYNC YELLOW LINK

SIZE D
DRAWING NUMBER 94028263
REV. A

MATERIAL: ——— SCALE: NA WEIGHT: – SHEET 9 OF 35

1 *AUTOCAD

REV.	ZONE	ECN NO.	DATE	BY	CKR	APP.

ACS, BNL 10/7/99 10:28 AM 8263_10.dwg

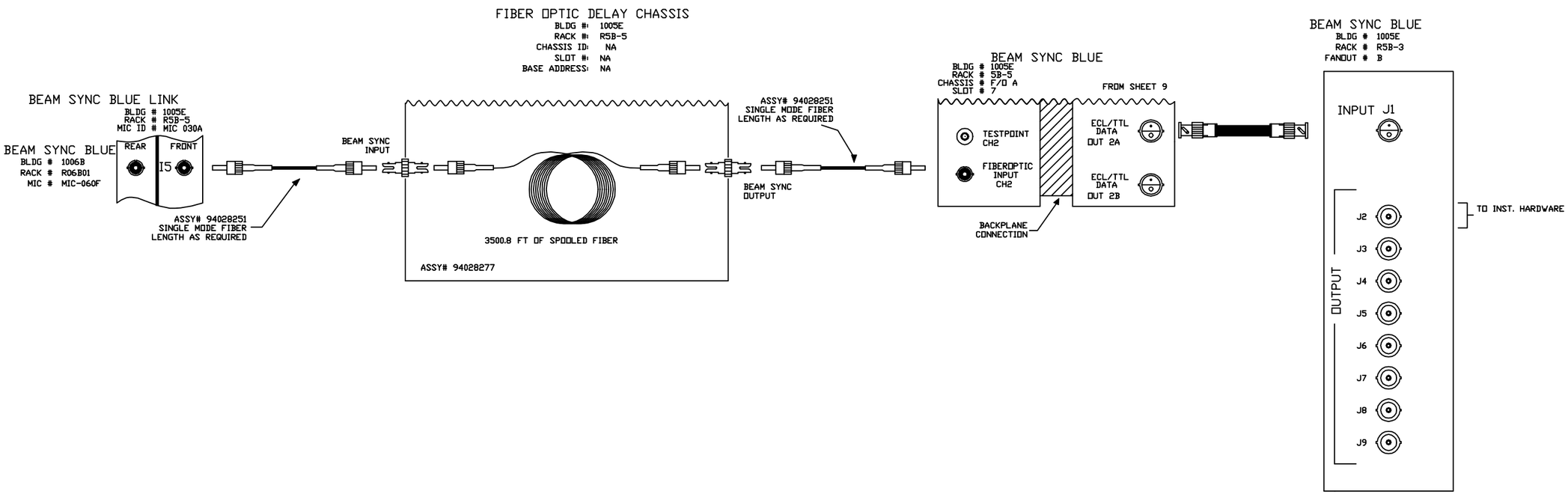

-3	-2	-1	REF DESIGNATOR	ITEM NO.	DESCRIPTION	MAT'L DWG NO.,BNL NO.
QTY REQD						

INTERPRET IN GENERAL ACCORDANCE WITH ASME Y14.24M-1989

UNLESS OTHERWISE SPECIFIED DIMENSIONS ARE IN INCHES

DECIMAL TOLERANCES
.X ±.030
.XX ±.015
.XXX ±.005
ANGULAR TOLERANCE
± .5°

NA FINISH

BREAK SHARP EDGES
MAX. XX MIN. XX

OUTSTANDING ECN

Q.A. CATEGORY A-3		DATE
DRAWN BY	Ed Koropsak	9/29/99
CHECKED BY		
DESIGN APPROVAL		
ENGINEER APPROVAL	R. MICHNOFF	9/29/99
SUPVR. APPROVAL		

NEXT ASSEMBLY

BROOKHAVEN NATIONAL LABORATORY
UPTON, N.Y. 11973

RHIC CONTROLS WIRING DIAGRAM

BLDG. 1005E

BEAM SYNC BLUE LINK

SIZE D | DRAWING NUMBER 94028263 | REV. A

MATERIAL: ——— SCALE: NA WEIGHT: – SHEET 10 OF 35

*AUTOCAD

REV.	ZONE	ECN NO.	DATE	BY	CKR	APP.

ACS, BNL 10/11/99 10:44 AM 8263_11.dwg

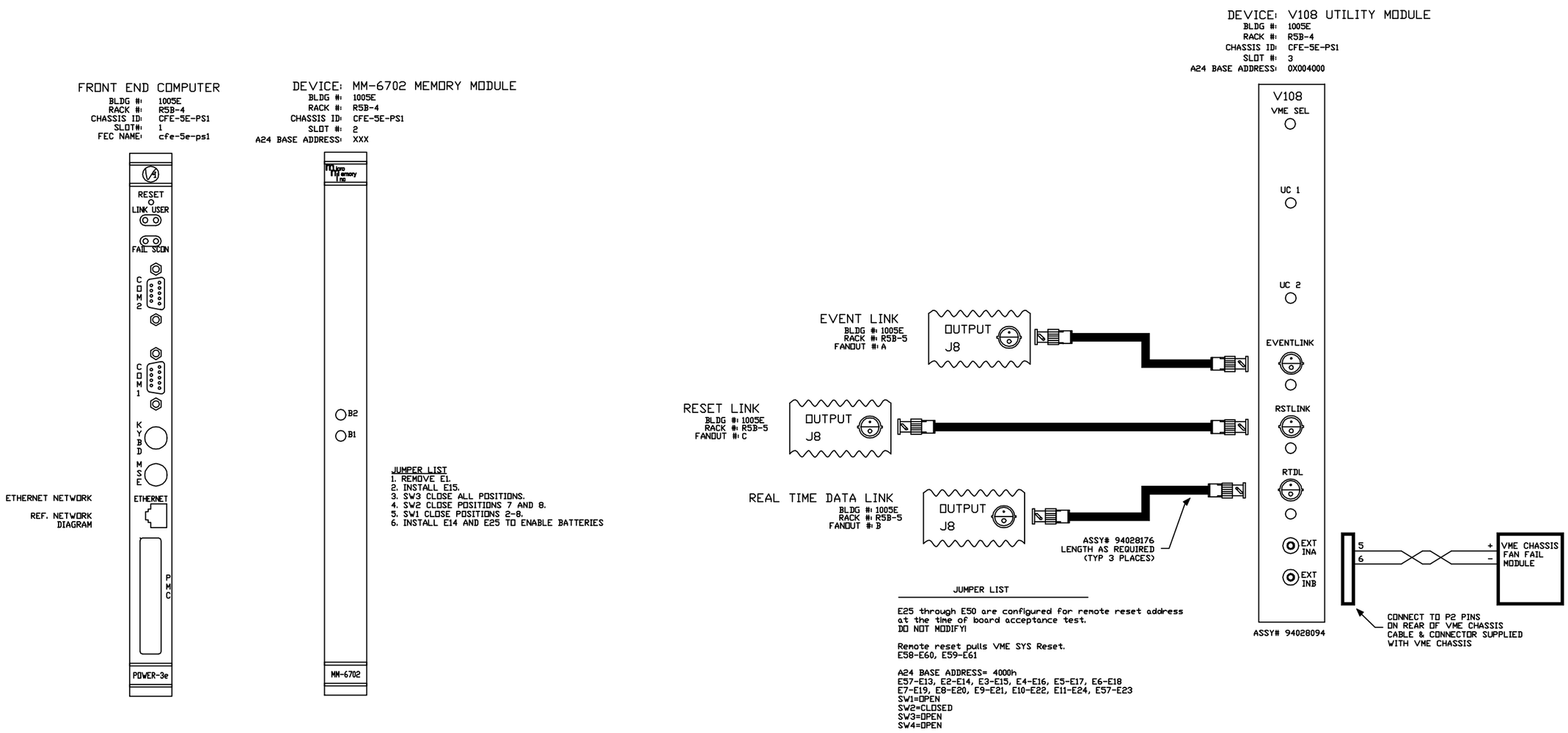

JUMPER LIST

E25 through E50 are configured for remote reset address at the time of board acceptance test.
DO NOT MODIFY!

Remote reset pulls VME SYS Reset.
E58-E60, E59-E61

A24 BASE ADDRESS= 4000h
E57-E13, E2-E14, E3-E15, E4-E16, E5-E17, E6-E18
E7-E19, E8-E20, E9-E21, E10-E22, E11-E24, E57-E23
SW1=OPEN
SW2=CLOSED
SW3=OPEN
SW4=OPEN

-3	-2	-1	REF DESIGNATOR	ITEM NO.	DESCRIPTION	MAT'L DWG NO./BNL NO.
QTY REQD						

INTERPRET IN GENERAL ACCORDANCE WITH ASME Y14.24M-1989	Q.A. CATEGORY A-3	DATE	BROOKHAVEN NATIONAL LABORATORY UPTON, N.Y. 11973
UNLESS OTHERWISE SPECIFIED DIMENSIONS ARE IN INCHES	DRAWN BY Koropsak	9/30/99	RHIC CONTROLS WIRING DIAGRAM
DECIMAL TOLERANCES .X ±.030 .XX ±.015 .XXX ±.005 ANGULAR TOLERANCE ± .5°	CHECKED BY		BLDG. 1005E, VME CHASSIS CFE-5E-PS1
	DESIGN APPROVAL		CPU/MEMORY /V108 UTIL MODULE
	ENGINEER APPROVAL R. MICHNOFF	9/30/99	SIZE D — 94028263 — REV. A
	SUPVR. APPROVAL		DRAWING NUMBER
OUTSTANDING ECN	NA FINISH	BREAK SHARP EDGES MAX. XX MIN. XX	NEXT ASSEMBLY
			MATERIAL: —— SCALE: NA WEIGHT: — SHEET 11 OF 35

*AUTOCAD

ACS, BNL 10/5/99 8:39 AM 8263_12.dwg

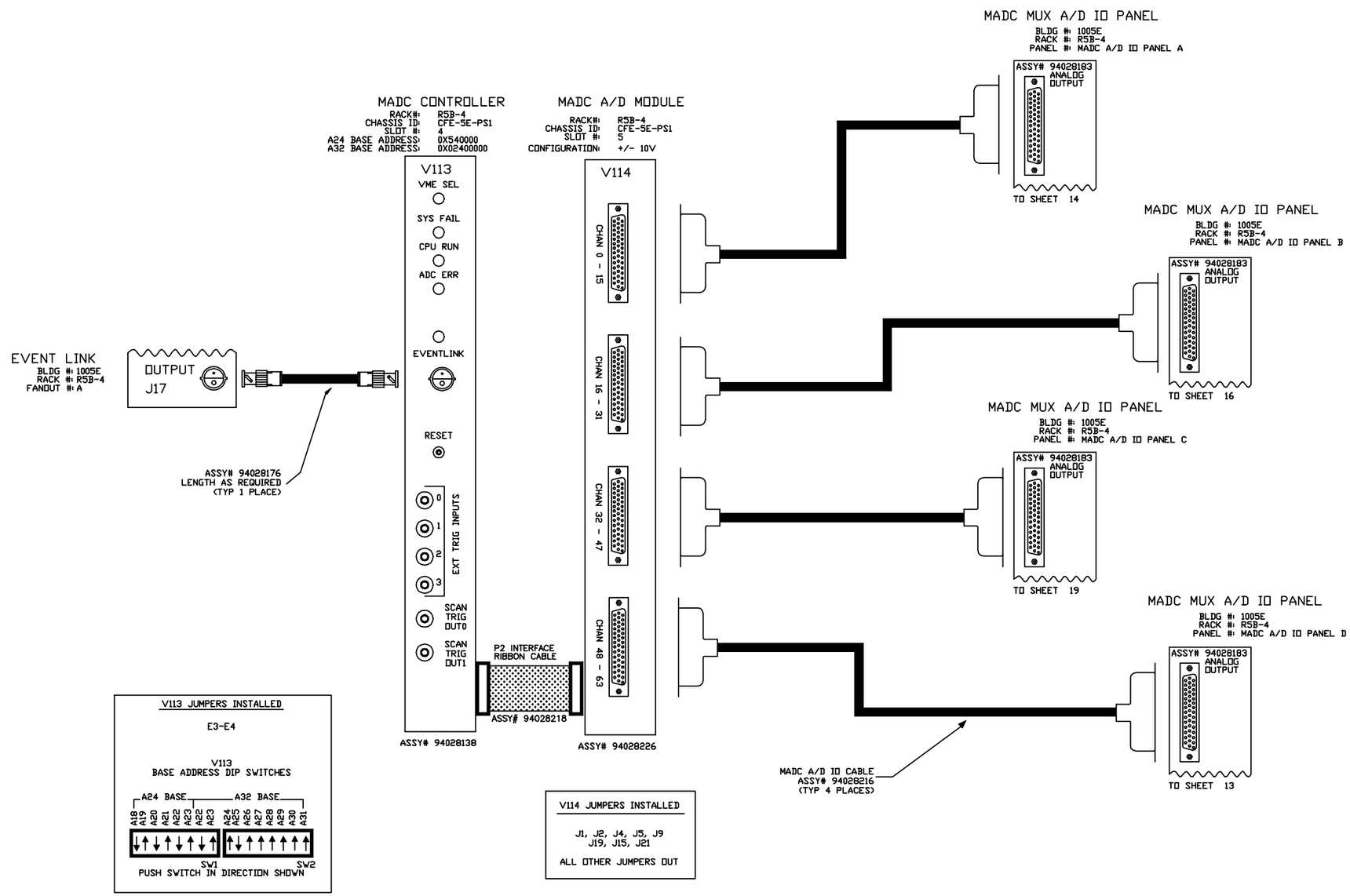

V113 JUMPERS INSTALLED

E3-E4

V113
BASE ADDRESS DIP SWITCHES

PUSH SWITCH IN DIRECTION SHOWN

V114 JUMPERS INSTALLED

J1, J2, J4, J5, J9
J19, J15, J21

ALL OTHER JUMPERS OUT

REV.	ZONE	ECN NO.	DATE	BY	CKR	APP.

-3	-2	-1	REF DESIGNATOR	ITEM NO.	DESCRIPTION	MAT'L DWG NO./BNL NO.
QTY REQD						

INTERPRET IN GENERAL ACCORDANCE WITH ASME Y14.24M-1989

UNLESS OTHERWISE SPECIFIED DIMENSIONS ARE IN INCHES

DECIMAL TOLERANCES
.X ±.030
.XX ±.015
.XXX ±.005
ANGULAR TOLERANCE
± .5°

NA FINISH

BREAK SHARP EDGES
MAX. XX MIN. XX

OUTSTANDING ECN

Q.A. CATEGORY A-3		DATE
DRAWN BY	Ed Koropsak	9/30/99
CHECKED BY		
DESIGN APPROVAL		
ENGINEER APPROVAL	R. MICHNOFF	9/30/99
SUPVR. APPROVAL		

NEXT ASSEMBLY

BROOKHAVEN NATIONAL LABORATORY
UPTON, N.Y. 11973

RHIC CONTROLS WIRING DIAGRAM

BLDG. 1005E, VME CHASSIS CFE-5E-PS1

MADC SYSTEM

SIZE D | DRAWING NUMBER 94028263 | REV. A

MATERIAL: ——— SCALE: NA WEIGHT: – SHEET 12 OF 35

*AUTOCAD

REV.	ZONE	ECN NO.	DATE	BY	CKR	APP.

ACS, BNL 9/30/99 1:43 PM 8266_13.dwg

MADC MUX A/D IO PANEL

BLDG #: 1005E
RACK #: R5B-4
PANEL #: MADC A/D IO PANEL D

FR SHEET 12

J0	CHAN 48 HV FROM INJECTION KICKER
J1	CHAN 49 SPARE
J2	CHAN 50 SPARE
J3	CHAN 51 SPARE
J4	CHAN 52 SPARE
J5	CHAN 53 SPARE
J6	CHAN 54 SPARE
J7	CHAN 55 SPARE
J8	CHAN 56 SPARE
J9	CHAN 57 SPARE
J10	CHAN 58 SPARE
J11	CHAN 59 SPARE
J12	CHAN 60 SPARE
J13	CHAN 61 SPARE
J14	CHAN 62 SPARE
J15	CHAN 63 SPARE

-3	-2	-1	REF DESIGNATOR	ITEM NO.	DESCRIPTION	MAT'L. DWG NO./INL. NO.
QTY REQD						

INTERPRET IN GENERAL ACCORDANCE WITH ASME Y14.24M-1989

UNLESS OTHERWISE SPECIFIED DIMENSIONS ARE IN INCHES
DECIMAL TOLERANCES
.X ±.030
.XX ±.015
.XXX ±.005
ANGULAR TOLERANCE
± .5°

OUTSTANDING ECN

NA FINISH

BREAK SHARP EDGES
MAX. XX MIN. XX

Q.A. CATEGORY A-3		DATE
DRAWN BY	Ed Koropsak	9/30/99
CHECKED BY		
DESIGN APPROVAL		
ENGINEER APPROVAL	R. MICHNOFF	9/30/99
SUPVR. APPROVAL		

NEXT ASSEMBLY

BROOKHAVEN NATIONAL LABORATORY
UPTON, N.Y. 11973

RHIC CONTROLS WIRING DIAGRAM
BLDG. 1005E

MISC./SPARE MADC INPUTS

SIZE D
DRAWING NUMBER 94028263
REV. A

MATERIAL: ——— SCALE: NA WEIGHT: – SHEET 13 OF 35

*AUTOCAD

REV.	ZONE	ECN NO.	DATE	BY	CKR	APP.

ACS, BNL 10/5/99 8:43 AM 8263_14.dwg

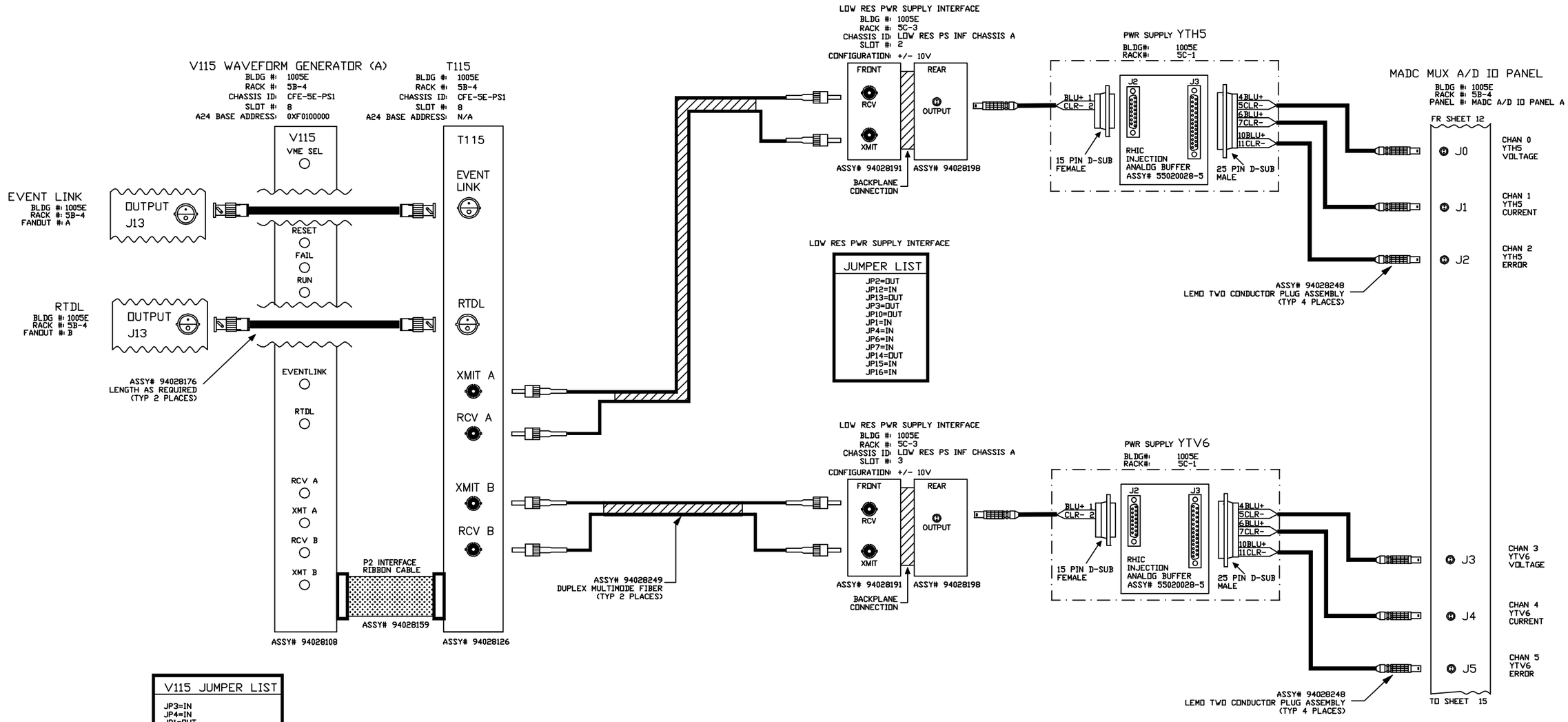

LOW RES PWR SUPPLY INTERFACE

JUMPER LIST
JP2=OUT
JP12=IN
JP13=OUT
JP3=OUT
JP10=OUT
JP1=IN
JP4=IN
JP6=IN
JP7=IN
JP14=OUT
JP15=IN
JP16=IN

V115 JUMPER LIST
JP3=IN
JP4=IN
JP1=OUT
JP2=OUT
A24 BASE ADDRESS
JB1-A23=IN
JB1-A22=IN
JB1-A21=IN
JB1-A20=OUT
JB1-A19=IN
JB1-A18=IN

-3	-2	-1	REF DESIGNATOR	ITEM NO.	DESCRIPTION	MAT'L DWG NO./BNL NO.
QTY REQD						

INTERPRET IN GENERAL ACCORDANCE WITH ASME Y14.24M-1989

UNLESS OTHERWISE SPECIFIED DIMENSIONS ARE IN INCHES

DECIMAL TOLERANCES
.X ±.030
.XX ±.015
.XXX ±.005
ANGULAR TOLERANCE
± .5°

OUTSTANDING ECN

NA FINISH

BREAK SHARP EDGES
MAX. XX MIN. XX

Q.A. CATEGORY A-3		DATE
DRAWN BY	Ed Koropsak	7/2/98
CHECKED BY		
DESIGN APPROVAL		
ENGINEER APPROVAL	R. MICHNOFF	7/2/98
SUPVR. APPROVAL		

NEXT ASSEMBLY

BROOKHAVEN NATIONAL LABORATORY
UPTON, N.Y. 11973

RHIC CONTROLS WIRING DIAGRAM
BLDG. 1005E, CFE-5E-PS1

POWER SUPPLY YTH5/YTV6

SIZE D
DRAWING NUMBER 94028263
REV. A

MATERIAL: ——— SCALE: NA WEIGHT: – SHEET 14 OF 35

*AUTOCAD

REV.	ZONE	ECN NO.	DATE	BY	CKR	APP.

ACS, BNL 10/5/99 8:45 AM 8263_15.dwg

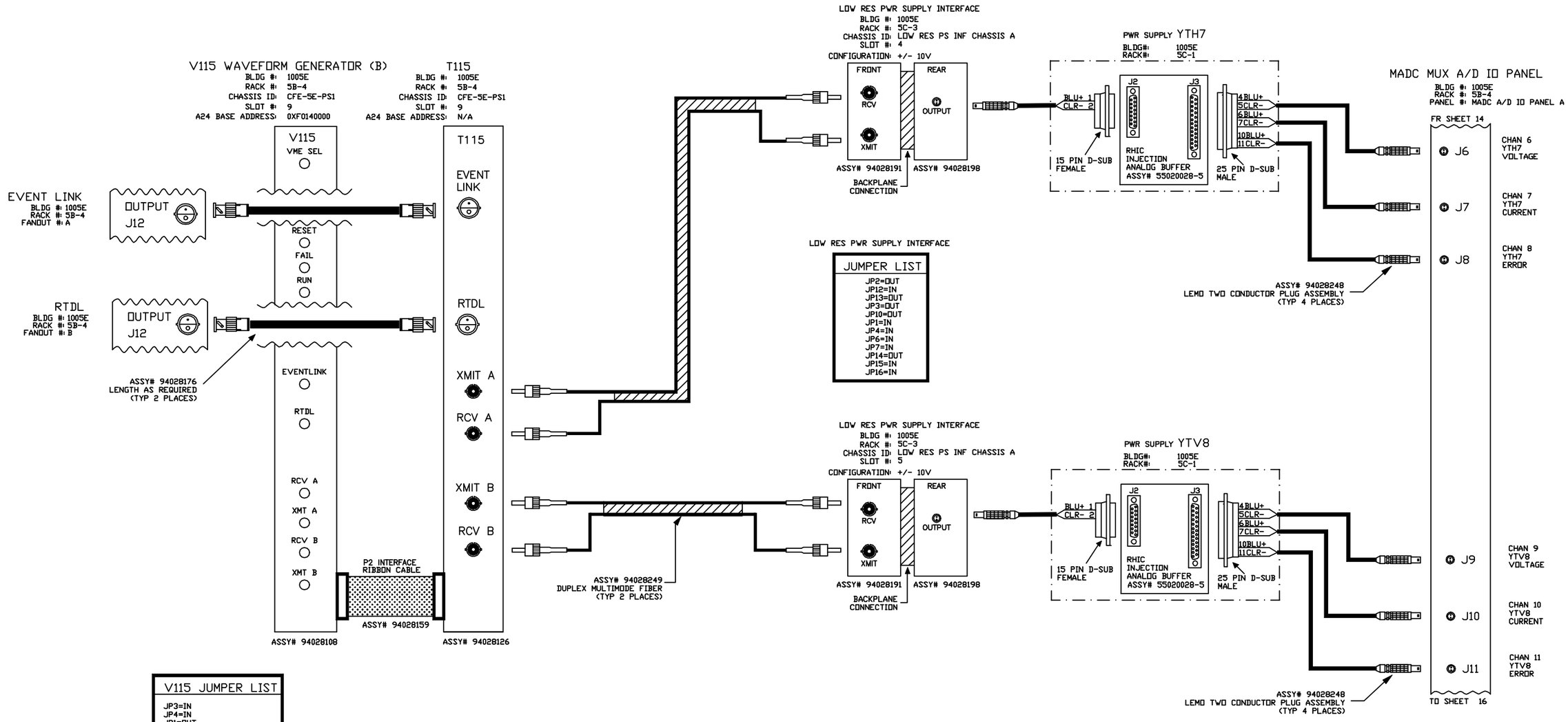

V115 JUMPER LIST
JP3=IN JP4=IN JP1=OUT JP2=OUT
A24 BASE ADDRESS JB1-A23=IN JB1-A22=IN JB1-A21=IN JB1-A20=OUT JB1-A19=IN JB1-A18=OUT

-3	-2	-1	REF DESIGNATOR	ITEM NO.	DESCRIPTION	MAT'L DWG NO./BNL NO.
QTY REQD						

INTERPRET IN GENERAL ACCORDANCE WITH ASME Y14.24M-1989

UNLESS OTHERWISE SPECIFIED DIMENSIONS ARE IN INCHES

DECIMAL TOLERANCES
.X ±.030
.XX ±.015
.XXX ±.005
ANGULAR TOLERANCE
± .5°

NA FINISH

BREAK SHARP EDGES
MAX. XX MIN. XX

OUTSTANDING ECN

Q.A. CATEGORY A-3		DATE
DRAWN BY	Ed Koropsak	7/2/98
CHECKED BY		
DESIGN APPROVAL		
ENGINEER APPROVAL	R. MICHNOFF	7/2/98
SUPVR. APPROVAL		

NEXT ASSEMBLY

BROOKHAVEN NATIONAL LABORATORY
UPTON, N.Y. 11973

RHIC CONTROLS WIRING DIAGRAM
BLDG. 1005E, CFE-5E-PS1
POWER SUPPLY YTH7/YTV8

SIZE D | DRAWING NUMBER 94028263 | REV. A

MATERIAL: ——— SCALE: NA WEIGHT: – SHEET 15 OF 35

*AUTOCAD

REV.	ZONE	ECN NO.	DATE	BY	CKR	APP.

ACS, BNL 10/5/99 8:49 AM 8263_16.dwg

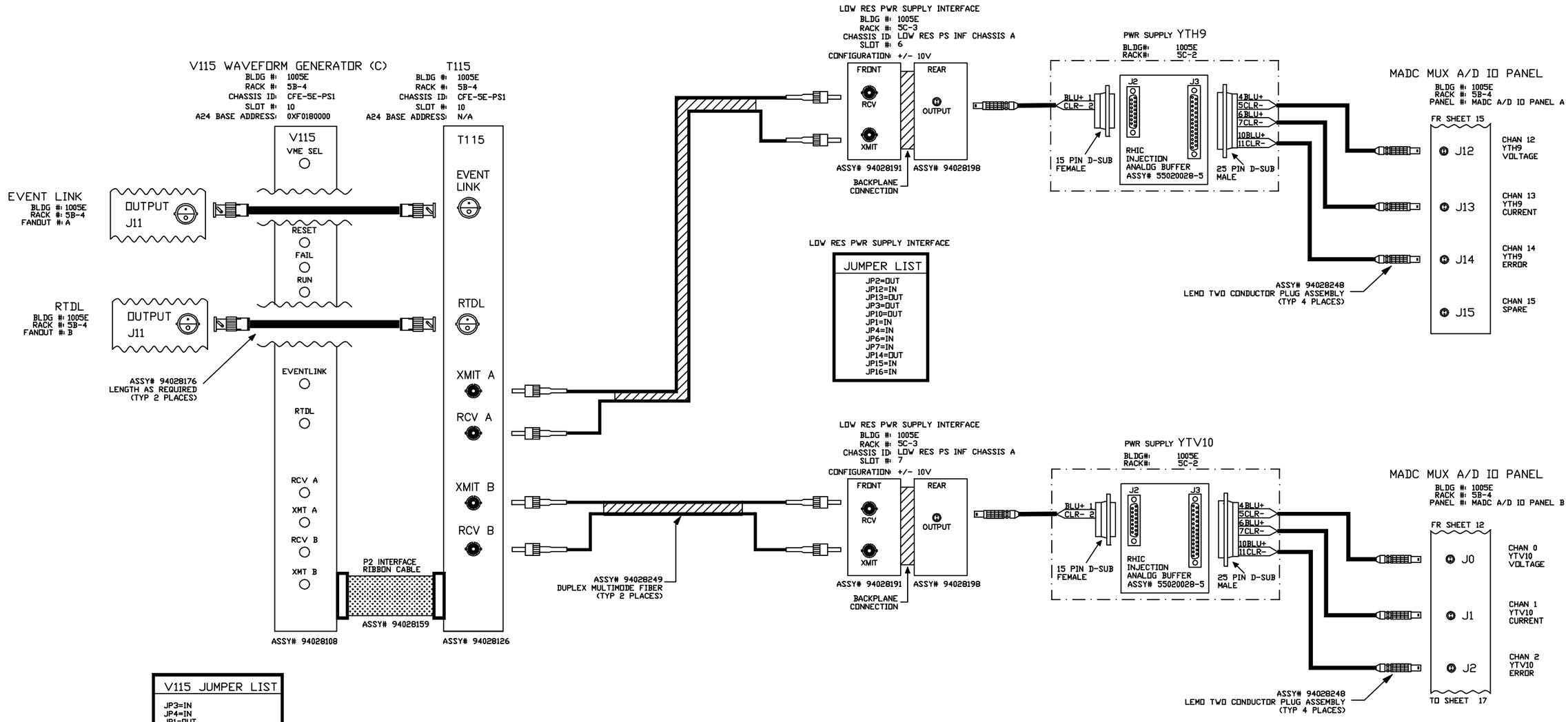

LOW RES PWR SUPPLY INTERFACE

JUMPER LIST
JP2=OUT
JP12=IN
JP13=OUT
JP3=OUT
JP10=OUT
JP1=IN
JP4=IN
JP6=IN
JP7=IN
JP14=OUT
JP15=IN
JP16=IN

V115 JUMPER LIST
JP3=IN
JP4=IN
JP1=OUT
JP2=OUT
A24 BASE ADDRESS
JB1-A23=IN
JB1-A22=IN
JB1-A21=IN
JB1-A20=OUT
JB1-A19=OUT
JB1-A18=IN

-3	-2	-1	REF DESIGNATOR	ITEM NO.	DESCRIPTION	MAT'L DWG NO./BNL NO.
QTY REQD						

INTERPRET IN GENERAL ACCORDANCE WITH ASME Y14.24M-1989

UNLESS OTHERWISE SPECIFIED DIMENSIONS ARE IN INCHES

DECIMAL TOLERANCES
.X ±.030
.XX ±.015
.XXX ±.005
ANGULAR TOLERANCE
± .5°

OUTSTANDING ECN

NA FINISH

BREAK SHARP EDGES
MAX. XX MIN. XX

Q.A. CATEGORY A-3		DATE
DRAWN BY	Ed Koropsak	7/2/98
CHECKED BY		
DESIGN APPROVAL		
ENGINEER APPROVAL	R. MICHNOFF	7/2/98
SUPVR. APPROVAL		

NEXT ASSEMBLY

BROOKHAVEN NATIONAL LABORATORY
UPTON, N.Y. 11973

RHIC CONTROLS WIRING DIAGRAM
BLDG. 1005E, CFE-5E-PS1
POWER SUPPLY YTH9/YTV10

SIZE D
DRAWING NUMBER 94028263
REV. A

MATERIAL: ——— SCALE: NA WEIGHT: – SHEET 16 OF 35

*AUTOCAD

REV.	ZONE	ECN NO.	DATE	BY	CKR	APP.

ACS, BNL 10/5/99 9:12 AM 8263_17.dwg

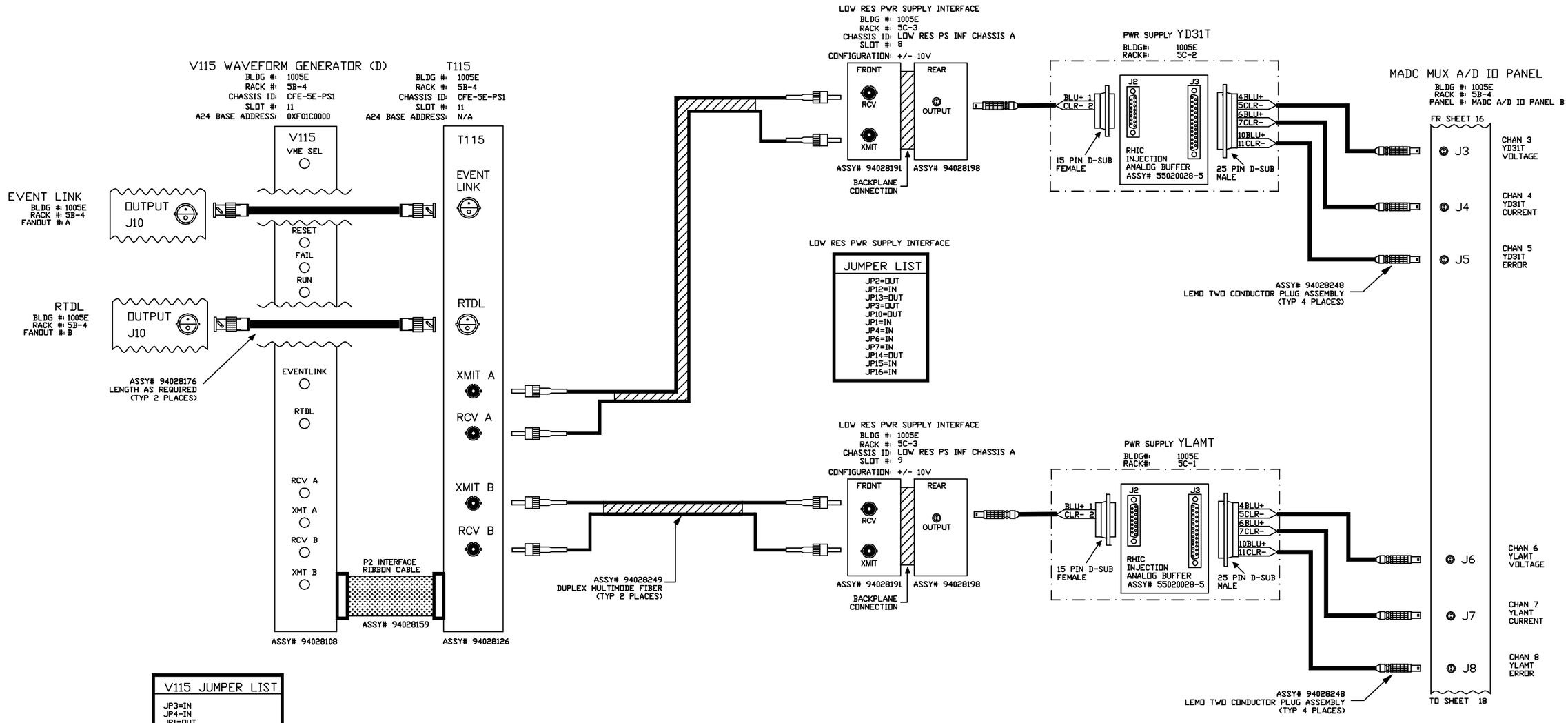

V115 JUMPER LIST
JP3=IN JP4=IN JP1=OUT JP2=OUT
A24 BASE ADDRESS JB1-A23=IN JB1-A22=IN JB1-A21=IN JB1-A20=OUT JB1-A19=OUT JB1-A18=OUT

-3	-2	-1	REF DESIGNATOR	ITEM NO.	DESCRIPTION	MAT'L DWG NO./BNL NO.
QTY REQD						

INTERPRET IN GENERAL ACCORDANCE WITH ASME Y14.24M-1989

UNLESS OTHERWISE SPECIFIED DIMENSIONS ARE IN INCHES

DECIMAL TOLERANCES
.X ±.030
.XX ±.015
.XXX ±.005
ANGULAR TOLERANCE
± .5°

NA FINISH

BREAK SHARP EDGES
MAX. XX MIN. XX

OUTSTANDING ECN

Q.A. CATEGORY A-3		DATE
DRAWN BY	Ed Koropsak	7/2/98
CHECKED BY		
DESIGN APPROVAL		
ENGINEER APPROVAL	R. MICHNOFF	7/2/98
SUPVR. APPROVAL		

NEXT ASSEMBLY

BROOKHAVEN NATIONAL LABORATORY
UPTON, N.Y. 11973

RHIC CONTROLS WIRING DIAGRAM
BLDG. 1005E, CFE-5E-PS1
POWER SUPPLY YD31T/YLAMT

SIZE D | DRAWING NUMBER 94028263 | REV. A

MATERIAL: ——— SCALE: NA WEIGHT: – SHEET 17 OF 35

*AUTOCAD

REV.	ZONE	ECN NO.	DATE	BY	CKR	APP.

ACS, BNL 10/5/99 9:10 AM 8263_18.dwg

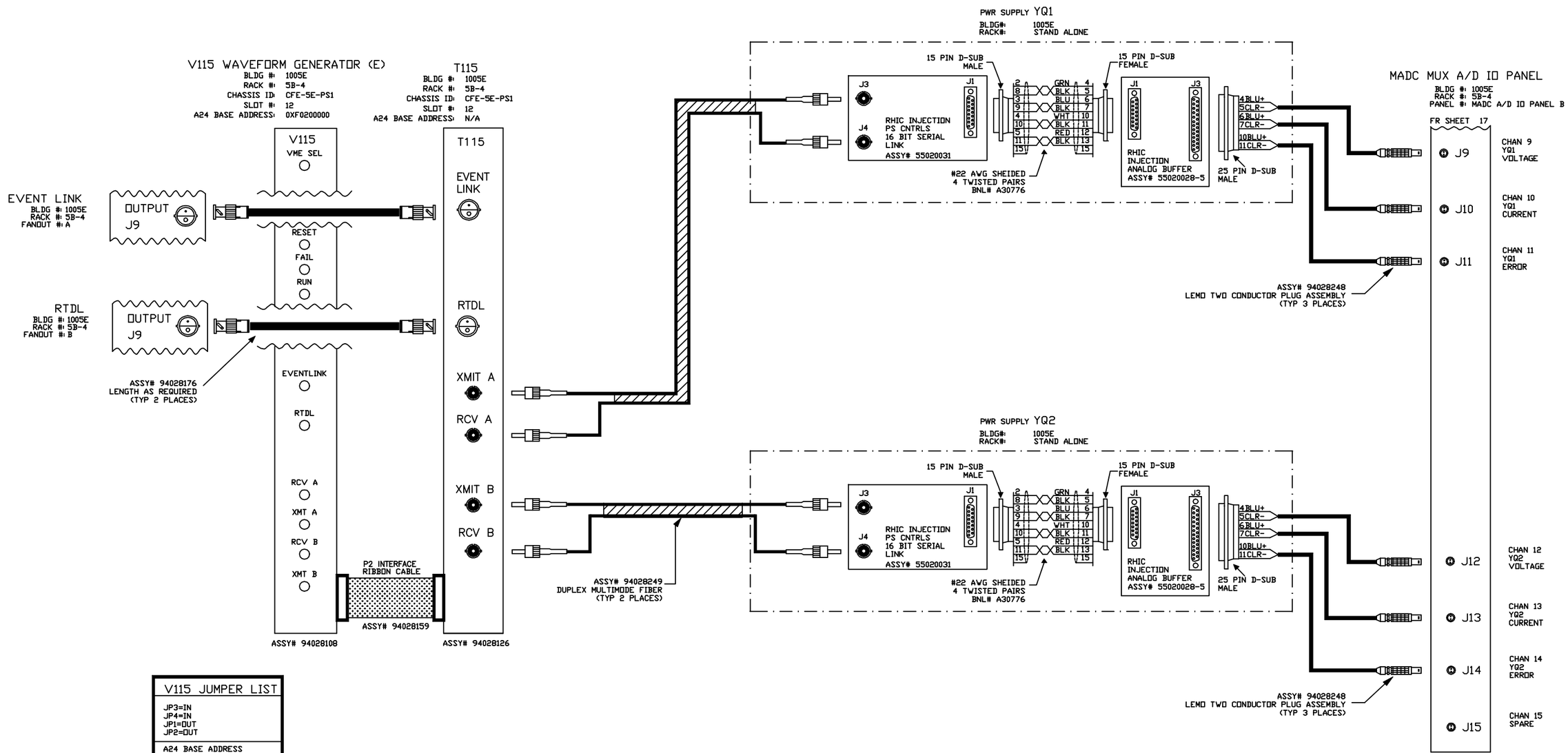

V115 JUMPER LIST
JP3=IN JP4=IN JP1=OUT JP2=OUT
A24 BASE ADDRESS JB1-A23=IN JB1-A22=IN JB1-A21=OUT JB1-A20=IN JB1-A19=IN JB1-A18=IN

-3	-2	-1	REF DESIGNATOR	ITEM NO.	DESCRIPTION	MAT'L. DWG NO./BNL NO.
QTY REQD						

INTERPRET IN GENERAL ACCORDANCE WITH ASME Y14.24M-1989

UNLESS OTHERWISE SPECIFIED DIMENSIONS ARE IN INCHES

DECIMAL TOLERANCES
.X ±.030
.XX ±.015
.XXX ±.005
ANGULAR TOLERANCE
± .5°

NA FINISH — BREAK SHARP EDGES MAX. XX MIN. XX

OUTSTANDING ECN

Q.A. CATEGORY A-3		DATE
DRAWN BY	Ed Koropsak	7/2/98
CHECKED BY		
DESIGN APPROVAL		
ENGINEER APPROVAL	R. MICHNOFF	7/2/98
SUPVR. APPROVAL		

NEXT ASSEMBLY

BROOKHAVEN NATIONAL LABORATORY
UPTON, N.Y. 11973

RHIC CONTROLS WIRING DIAGRAM
BLDG. 1005E, CFE-5E-PS1
POWER SUPPLY YQ1/YQ2

SIZE D — DRAWING NUMBER 94028263 — REV. A

MATERIAL: ——— SCALE: NA WEIGHT: – SHEET 18 OF 35

1 *AUTOCAD

ACS, BNL 10/5/99 9:14 AM 8263_19.dwg

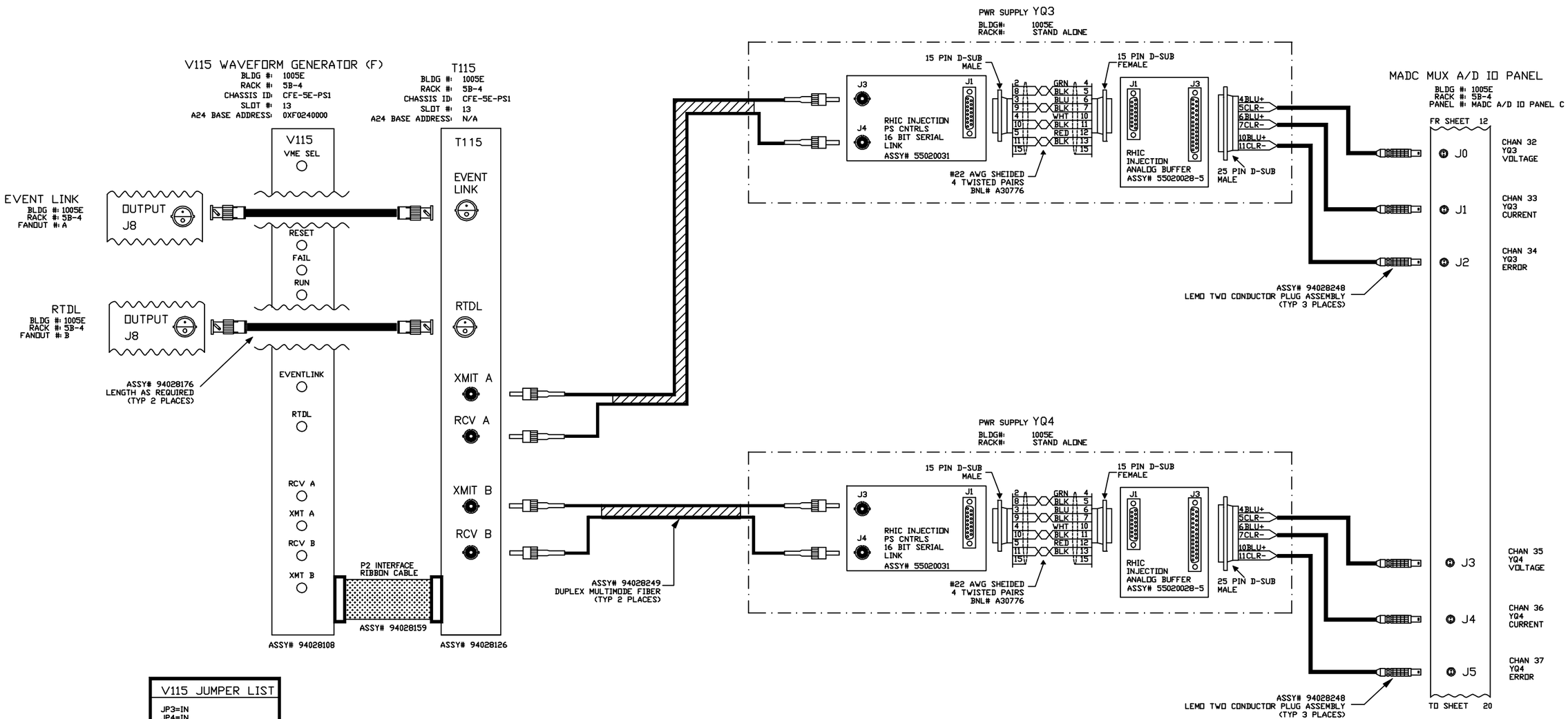

V115 JUMPER LIST
JP3=IN JP4=IN JP1=OUT JP2=OUT
A24 BASE ADDRESS JB1-A23=IN JB1-A22=IN JB1-A21=OUT JB1-A20=IN JB1-A19=IN JB1-A18=OUT

-3	-2	-1	REF DESIGNATOR	ITEM NO.	DESCRIPTION	MAT'L. DWG NO./BNL NO.
QTY REQD						

INTERPRET IN GENERAL ACCORDANCE WITH ASME Y14.24M-1989

UNLESS OTHERWISE SPECIFIED DIMENSIONS ARE IN INCHES

DECIMAL TOLERANCES
.X ±.030
.XX ±.015
.XXX ±.005
ANGULAR TOLERANCE
± .5°

NA FINISH

BREAK SHARP EDGES
MAX. XX MIN. XX

OUTSTANDING ECN

Q.A. CATEGORY A-3		DATE
DRAWN BY	Ed Koropsak	7/2/98
CHECKED BY		
DESIGN APPROVAL		
ENGINEER APPROVAL	R. MICHNOFF	7/2/98
SUPVR. APPROVAL		

NEXT ASSEMBLY

BROOKHAVEN NATIONAL LABORATORY
UPTON, N.Y. 11973

RHIC CONTROLS WIRING DIAGRAM
BLDG. 1005E, CFE-5E-PS1
POWER SUPPLY YQ3/YQ4

SIZE D | DRAWING NUMBER 94028263 | REV. A

MATERIAL: ——— SCALE: NA WEIGHT: – SHEET 19 OF 35

1 *AUTOCAD

ACS, BNL 10/5/99 9:16 AM 8263_20.dwg

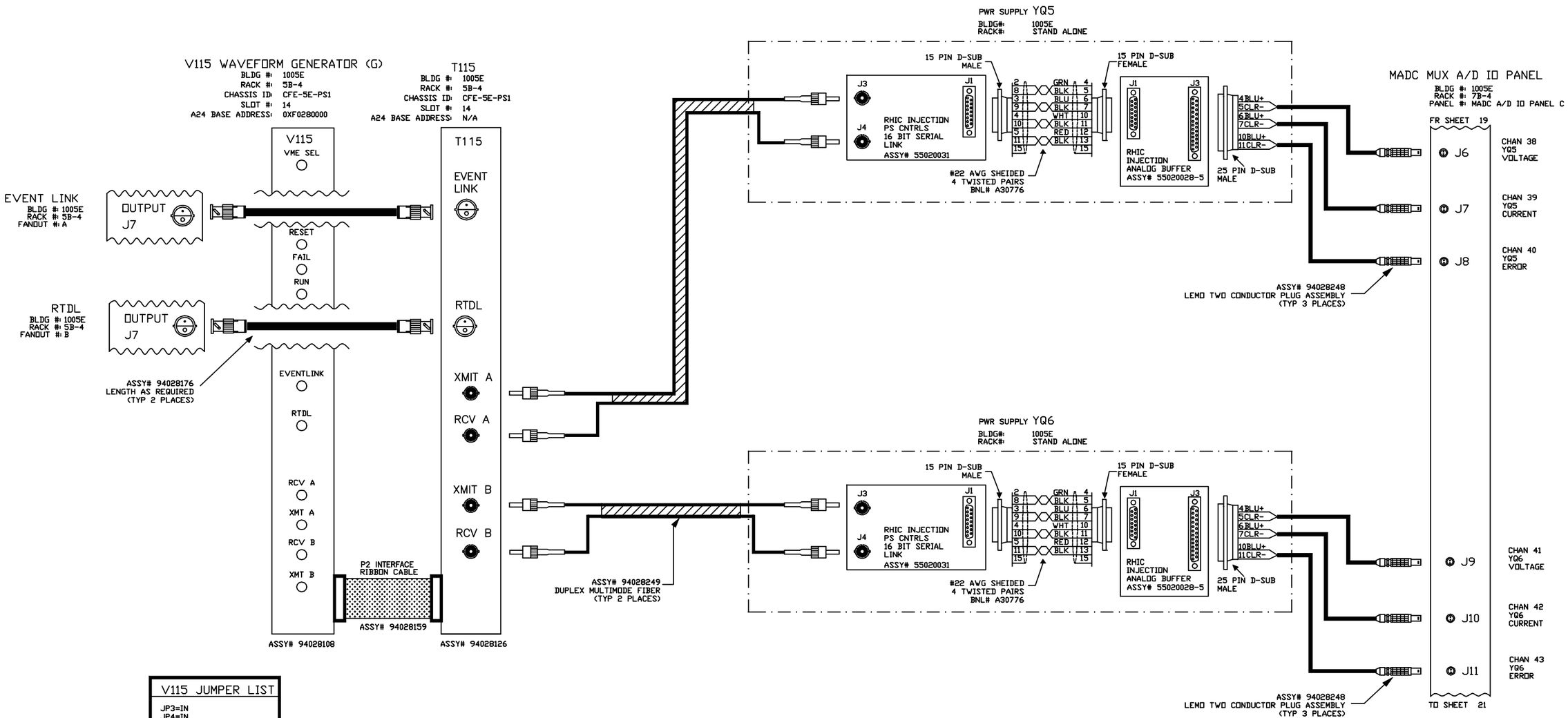

V115 JUMPER LIST
JP3=IN JP4=IN JP1=OUT JP2=OUT
A24 BASE ADDRESS JB1-A23=IN JB1-A22=IN JB1-A21=OUT JB1-A20=IN JB1-A19=OUT JB1-A18=IN

-3	-2	-1	REF DESIGNATOR	ITEM NO.	DESCRIPTION	MAT'L. DWG NO./BNL NO.
QTY REQD						

INTERPRET IN GENERAL ACCORDANCE WITH ASME Y14.24M-1989

UNLESS OTHERWISE SPECIFIED DIMENSIONS ARE IN INCHES

DECIMAL TOLERANCES
.X ±.030
.XX ±.015
.XXX ±.005
ANGULAR TOLERANCE
± .5°

NA FINISH — BREAK SHARP EDGES MAX. XX MIN. XX

OUTSTANDING ECN

Q.A. CATEGORY A-3		DATE
DRAWN BY	Ed Koropsak	7/2/98
CHECKED BY		
DESIGN APPROVAL		
ENGINEER APPROVAL	R. MICHNOFF	7/2/98
SUPVR. APPROVAL		

NEXT ASSEMBLY

BROOKHAVEN NATIONAL LABORATORY
UPTON, N.Y. 11973

RHIC CONTROLS WIRING DIAGRAM
BLDG. 1005E, CFE-5E-PS1
POWER SUPPLY YQ5/YQ6

SIZE D — DRAWING NUMBER 94028263 — REV. A

MATERIAL: ——— SCALE: NA WEIGHT: – SHEET 20 OF 35

1 *AUTOCAD

REV.	ZONE	ECN NO.	DATE	BY	CKR	APP.

ACS, BNL 10/5/99 9:18 AM 8263_21.dwg

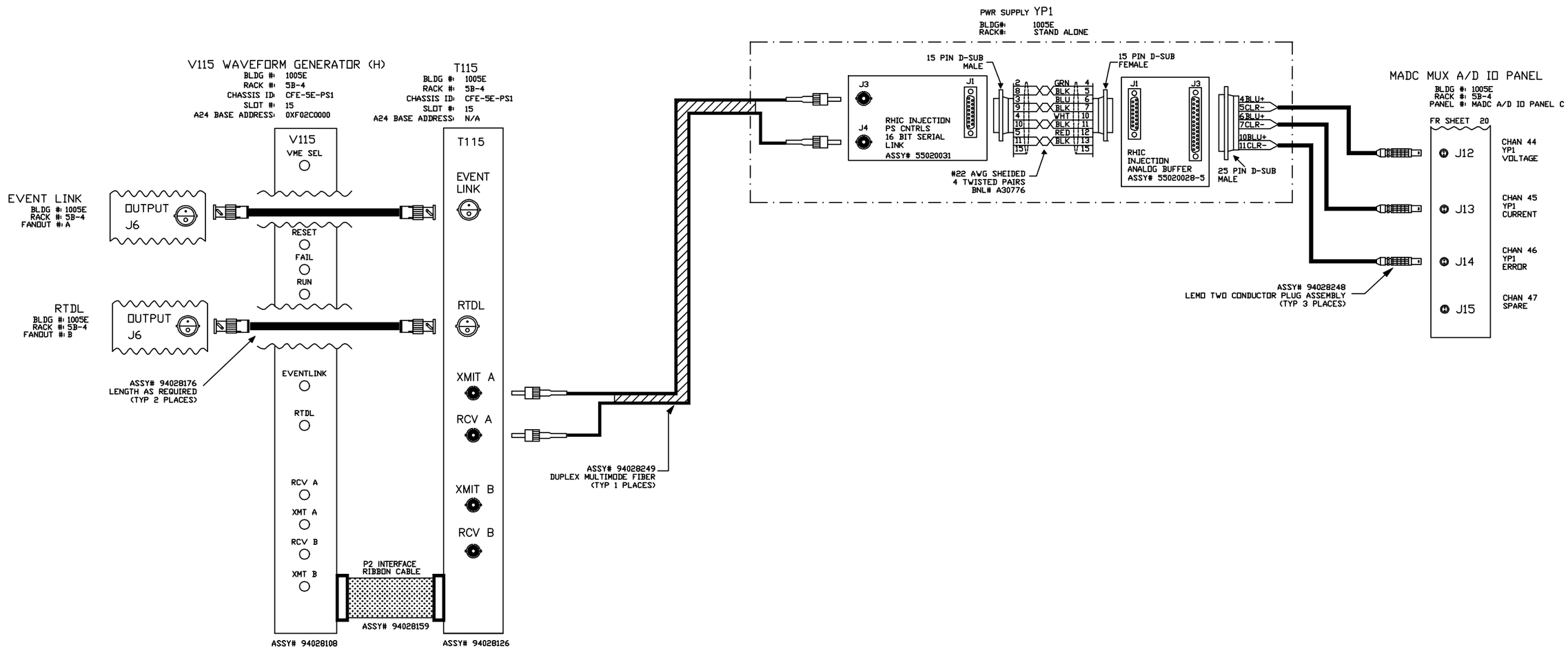

V115 JUMPER LIST
JP3=IN JP4=IN JP1=OUT JP2=OUT
A24 BASE ADDRESS JB1-A23=IN JB1-A22=IN JB1-A21=OUT JB1-A20=IN JB1-A19=OUT JB1-A18=OUT

-3	-2	-1	REF DESIGNATOR	ITEM NO.	DESCRIPTION	MAT'L DWG NO./BNL NO.
QTY REQD						

INTERPRET IN GENERAL ACCORDANCE WITH ASME Y14.24M-1989

UNLESS OTHERWISE SPECIFIED DIMENSIONS ARE IN INCHES

DECIMAL TOLERANCES
.X ±.030
.XX ±.015
.XXX ±.005
ANGULAR TOLERANCE
± .5°

NA FINISH

BREAK SHARP EDGES
MAX. XX MIN. XX

OUTSTANDING ECN

Q.A. CATEGORY A-3		DATE
DRAWN BY	Ed Koropsak	7/2/98
CHECKED BY		
DESIGN APPROVAL		
ENGINEER APPROVAL	R. MICHNOFF	7/2/98
SUPVR. APPROVAL		

NEXT ASSEMBLY

BROOKHAVEN NATIONAL LABORATORY
UPTON, N.Y. 11973

RHIC CONTROLS WIRING DIAGRAM
BLDG. 1005E, CFE-5E-PS1
POWER SUPPLY YP1

SIZE D | DRAWING NUMBER 94028263 | REV. A

MATERIAL: ——— SCALE: NA WEIGHT: – SHEET 21 OF 35

1 *AUTOCAD

REV.	ZONE	ECN NO.	DATE	BY	CKR	APP.

ACS, BNL 10/5/99 9:26 AM 8263_22.dwg

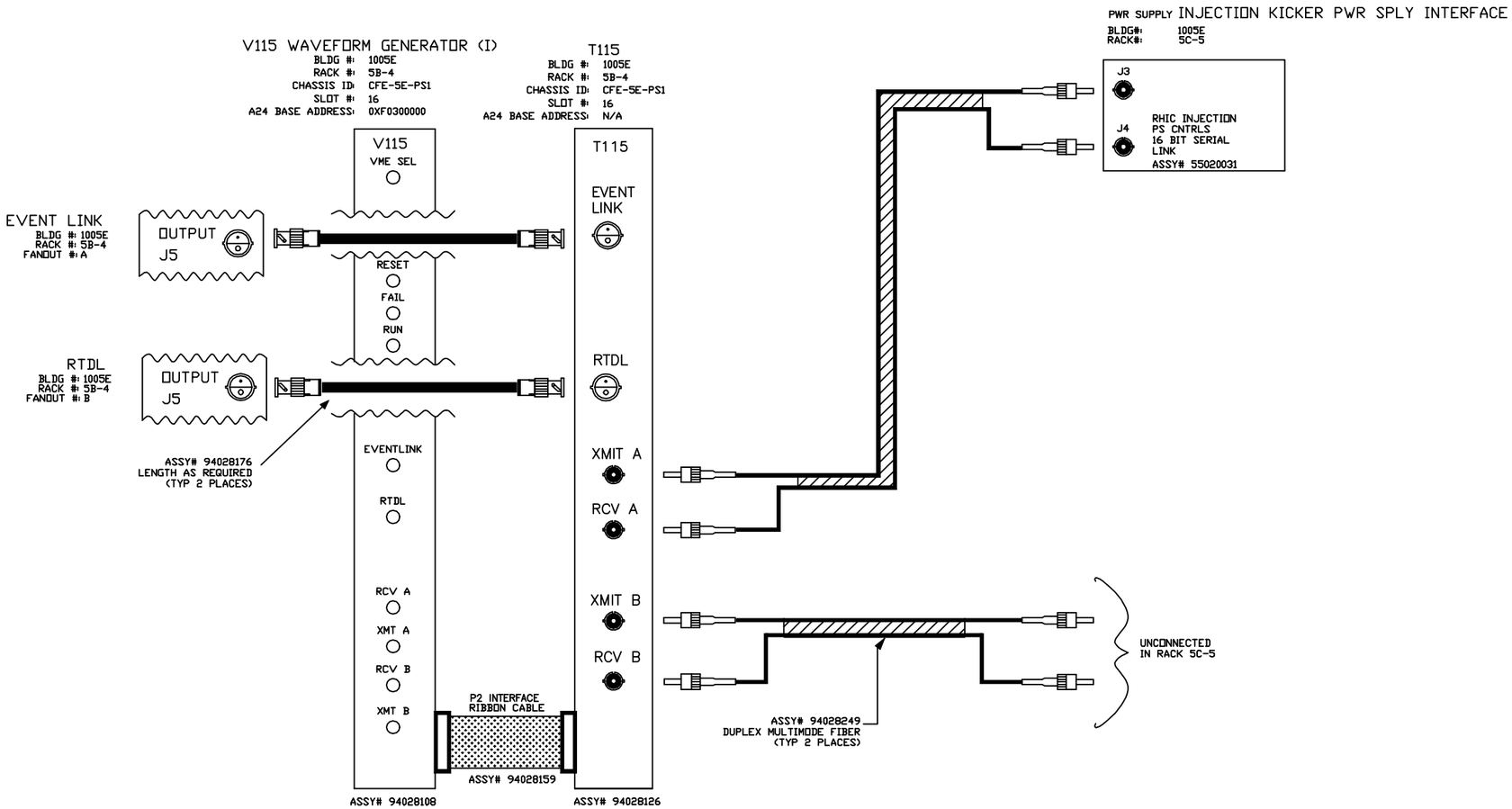

V115 JUMPER LIST
JP3=IN JP4=IN JP1=OUT JP2=OUT
A24 BASE ADDRESS JB1-A23=IN JB1-A22=IN JB1-A21=OUT JB1-A20=OUT JB1-A19=IN JB1-A18=IN

-3	-2	-1	REF DESIGNATOR	ITEM NO.	DESCRIPTION	MAT'L DWG NO./BNL NO.
QTY REQD						

INTERPRET IN GENERAL ACCORDANCE WITH ASME Y14.24M-1989

UNLESS OTHERWISE SPECIFIED DIMENSIONS ARE IN INCHES

DECIMAL TOLERANCES
.X ±.030
.XX ±.015
.XXX ±.005
ANGULAR TOLERANCE
± .5°

NA FINISH

BREAK SHARP EDGES
MAX. XX MIN. XX

OUTSTANDING ECN

Q.A. CATEGORY A-3		DATE
DRAWN BY	Ed Koropsak	7/2/98
CHECKED BY		
DESIGN APPROVAL		
ENGINEER APPROVAL	R. MICHNOFF	7/2/98
SUPVR. APPROVAL		

NEXT ASSEMBLY

BROOKHAVEN NATIONAL LABORATORY
UPTON, N.Y. 11973

RHIC CONTROLS WIRING DIAGRAM
BLDG. 1005E, CFE-5E-PS1
POWER SUPPLY INJECTION KICKER

SIZE D | DRAWING NUMBER 94028263 | REV. A

MATERIAL: ——— SCALE: NA WEIGHT: – SHEET 22 OF 35

1 *AUTOCAD

REV.	ZONE	ECN NO.	DATE	BY	CKR	APP.

ACS, BNL 10/15/99 9:53 AM 8263_23.dwg

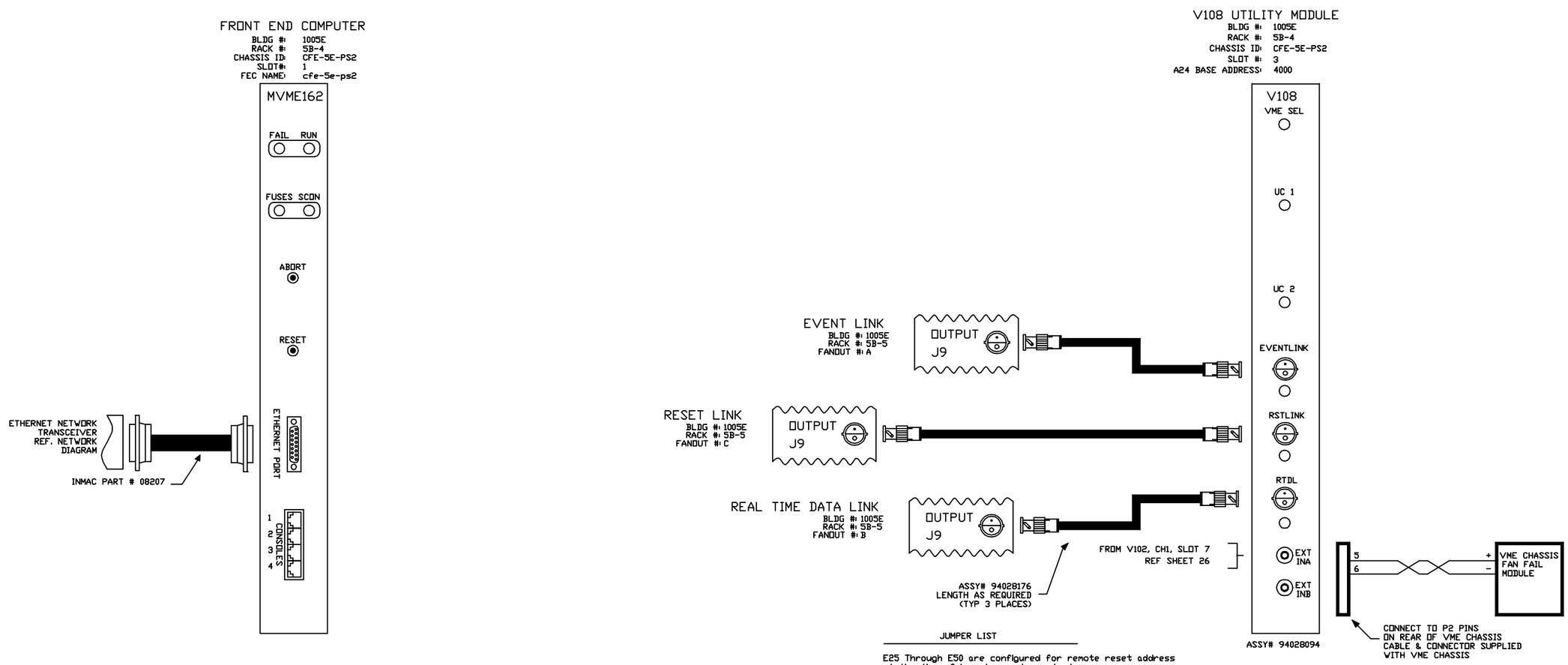

JUMPER LIST

E25 Through E50 are configured for remote reset address at the time of board acceptance test.
DO NOT MODIFY!

Remote reset pulls VME SYS Reset.
E58-E60, E59-E61

A24 BASE ADDRESS= 4000h
E57-E13, E2-E14, E3-E15, E4-E16, E5-E17, E6-E18
E7-E19, E8-E20, E9-E21, E10-E22, E11-E24, E57-E23
SW1=OPEN
SW2=CLOSED
SW3=OPEN
SW4=OPEN

-3	-2	-1	REF DESIGNATOR	ITEM NO.	DESCRIPTION	MAT'L DWG NO./BNL NO.
QTY REQD						

INTERPRET IN GENERAL ACCORDANCE WITH ASME Y14.24M-1989	Q.A. CATEGORY A-3	DATE	BROOKHAVEN NATIONAL LABORATORY
	DRAWN BY Ed Koropsak	7/2/98	UPTON, N.Y. 11973
UNLESS OTHERWISE SPECIFIED DIMENSIONS ARE IN INCHES	CHECKED BY		RHIC CONTROLS WIRING DIAGRAM
DECIMAL TOLERANCES .X ±.030 .XX ±.015 .XXX ±.005 ANGULAR TOLERANCE ± .5°	DESIGN APPROVAL		BLDG. 1005E, VME CHASSIS CFE-5E-PS2
	ENGINEER APPROVAL R. MICHNOFF	7/2/98	FT END COMP/V108 UTIL MODULE
	SUPVR. APPROVAL		SIZE D — 94028263 — REV. A
OUTSTANDING ECN	NA FINISH	BREAK SHARP EDGES MAX. XX MIN. XX	NEXT ASSEMBLY — DRAWING NUMBER
			MATERIAL: ——— SCALE: NA WEIGHT: – SHEET 23 OF 35

*AUTOCAD

REV.	ZONE	ECN NO.	DATE	BY	CKR	APP.

ACS, BNL 10/5/99 9:47 AM 8263_24.dwg

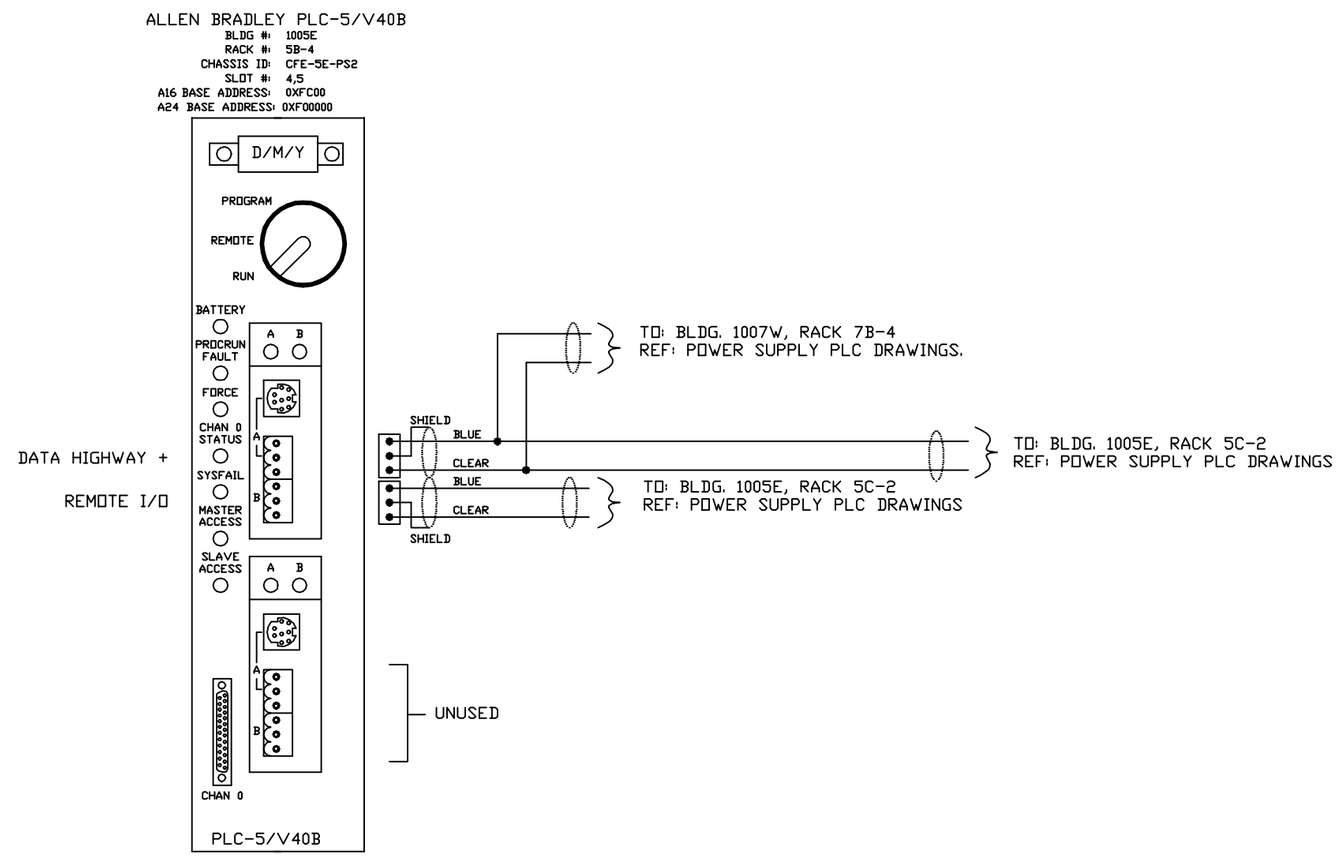

-3	-2	-1	REF DESIGNATOR	ITEM NO.	DESCRIPTION	MAT'L DWG NO./BNL NO.
QTY REQD						

INTERPRET IN GENERAL ACCORDANCE WITH ASME Y14.24M-1989

UNLESS OTHERWISE SPECIFIED DIMENSIONS ARE IN INCHES

DECIMAL TOLERANCES
.X ±.030
.XX ±.015
.XXX ±.005
ANGULAR TOLERANCE
± .5°

NA FINISH

BREAK SHARP EDGES
MAX. XX MIN. XX

OUTSTANDING ECN

Q.A. CATEGORY A-3		DATE
DRAWN BY	Ed Koropsak	7/2/98
CHECKED BY		
DESIGN APPROVAL		
ENGINEER APPROVAL	R. MICHNOFF	7/2/98
SUPVR. APPROVAL		

NEXT ASSEMBLY

BROOKHAVEN NATIONAL LABORATORY
UPTON, N.Y. 11973

RHIC CONTROLS WIRING DIAGRAM

BLDG. 1005E, VME CHASSIS CFE-5E-PS2

ALLEN BRADLEY VME PLC-5

SIZE D

DRAWING NUMBER 94028263

REV. A

MATERIAL: ——— SCALE: NA WEIGHT: – SHEET 24 OF 35

*AUTOCAD

REV.	ZONE	ECN NO.	DATE	BY	CKR	APP.

ACS, BNL 10/5/99 9:53 AM 8263_25.dwg

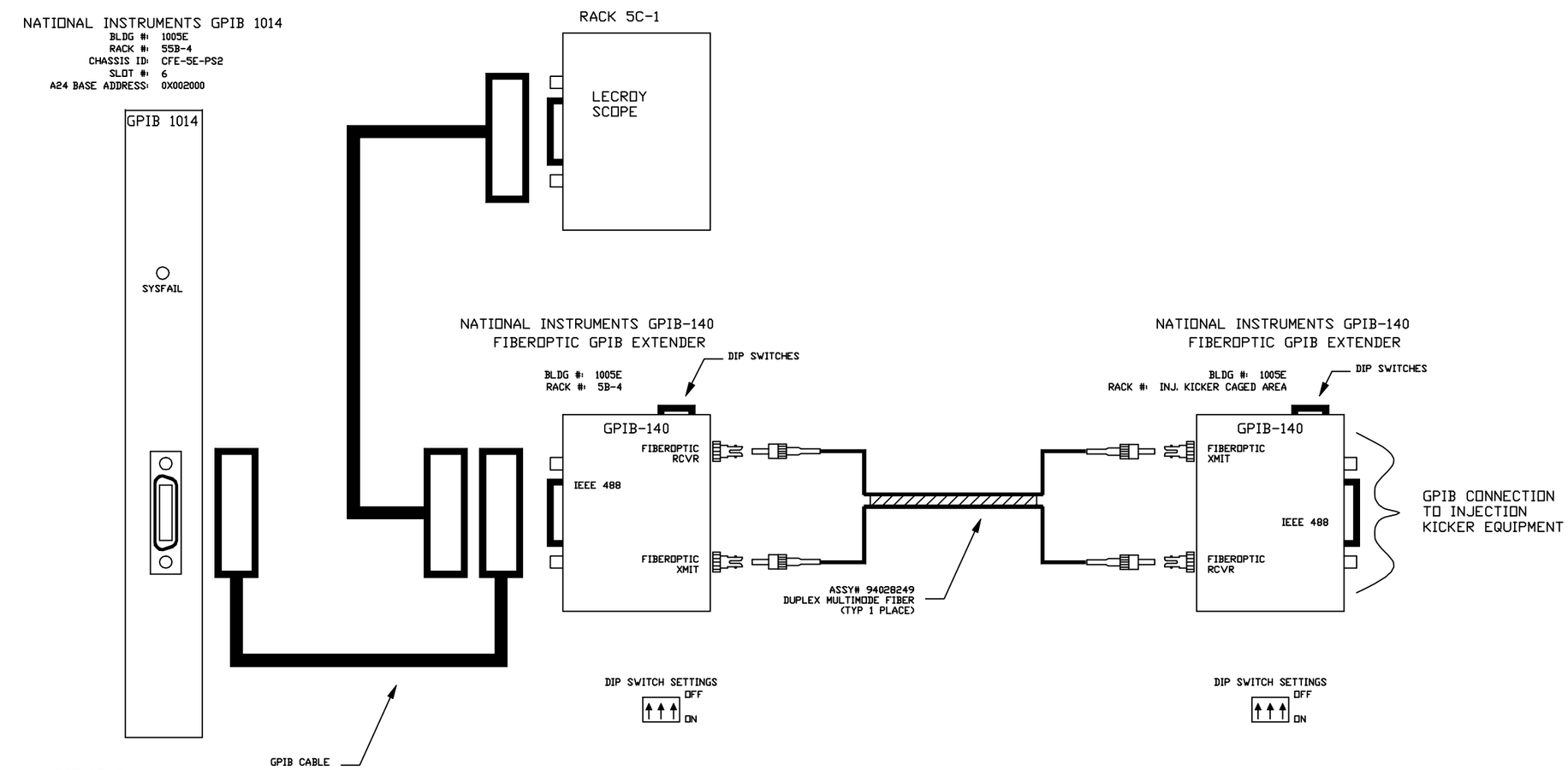

W1 ADDR 15=0
ADDR 14=0
ADDR 13=1
ADDR 12=0
ADDR 11=0
ADDR 10=0
ADDR 9=0

W2 S POSITION
W3 0 POSITION
W4 1 POSITION

-3	-2	-1	REF DESIGNATOR	ITEM NO.	DESCRIPTION	MAT'L DWG NO.,BNL NO.
QTY REQD						

INTERPRET IN GENERAL ACCORDANCE WITH ASME Y14.24M-1989

UNLESS OTHERWISE SPECIFIED DIMENSIONS ARE IN INCHES

DECIMAL TOLERANCES
.X ±.030
.XX ±.015
.XXX ±.005
ANGULAR TOLERANCE
± .5°

NA FINISH

BREAK SHARP EDGES
MAX. XX MIN. XX

OUTSTANDING ECN

Q.A. CATEGORY A-3		DATE
DRAWN BY	Phil Pape	4/11/97
CHECKED BY		
DESIGN APPROVAL		
ENGINEER APPROVAL	R. MICHNOFF	05/13/97
SUPVR. APPROVAL		

NEXT ASSEMBLY

BROOKHAVEN NATIONAL LABORATORY
UPTON, N.Y. 11973

RHIC CONTROLS WIRING DIAGRAM

BLDG. 1005E, VME CHASSIS CFE-5E-PS2

GPIB INTER FOR INJECTION KICKER

SIZE D | DRAWING NUMBER 94028263 | REV. A

MATERIAL: ——— SCALE: NA WEIGHT: – SHEET 25 OF 35

*AUTOCAD

ACS, BNL 10/15/99 9:38 AM 8263_26.dwg

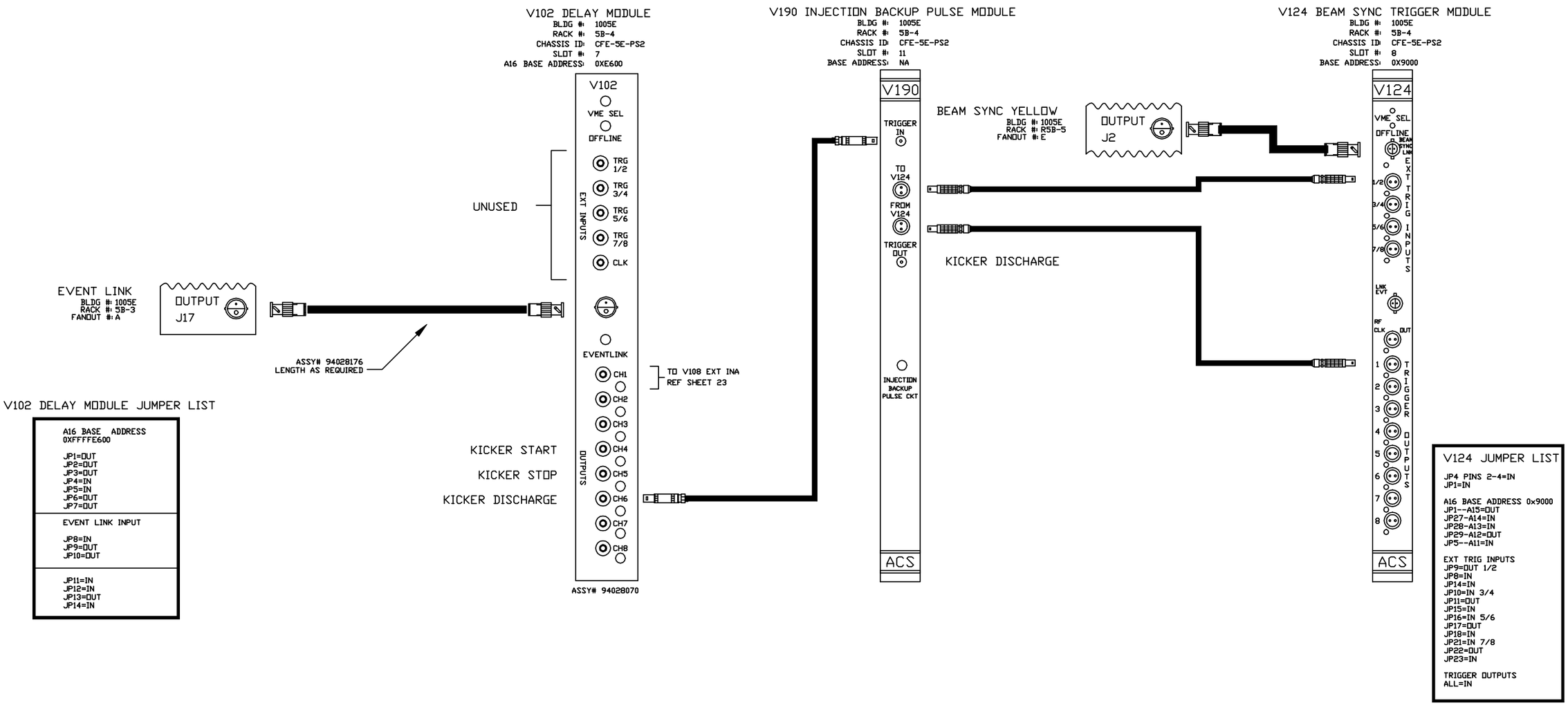

V102 DELAY MODULE JUMPER LIST

A16 BASE ADDRESS
0XFFFFE600

JP1=OUT
JP2=OUT
JP3=OUT
JP4=IN
JP5=IN
JP6=OUT
JP7=OUT

EVENT LINK INPUT

JP8=IN
JP9=OUT
JP10=OUT

JP11=IN
JP12=IN
JP13=OUT
JP14=IN

V124 JUMPER LIST

JP4 PINS 2-4=IN
JP1=IN

A16 BASE ADDRESS 0x9000
JP1--A15=OUT
JP27-A14=IN
JP28-A13=IN
JP29-A12=OUT
JP5--A11=IN

EXT TRIG INPUTS
JP9=OUT 1/2
JP8=IN
JP14=IN
JP10=IN 3/4
JP11=OUT
JP15=IN
JP16=IN 5/6
JP17=OUT
JP18=IN
JP21=IN 7/8
JP22=OUT
JP23=IN

TRIGGER OUTPUTS
ALL=IN

REV.	ZONE	ECN NO.	DATE	BY	CKR	APP.

-3	-2	-1	REF DESIGNATOR	ITEM NO.	DESCRIPTION	MAT'L DWG NO./BNL NO.
QTY REQD						

INTERPRET IN GENERAL ACCORDANCE WITH ASME Y14.24M-1989

UNLESS OTHERWISE SPECIFIED DIMENSIONS ARE IN INCHES
DECIMAL TOLERANCES
.X ±.030
.XX ±.015
.XXX ±.005
ANGULAR TOLERANCE
± .5°

NA FINISH
BREAK SHARP EDGES
MAX. XX MIN. XX

OUTSTANDING ECN

Q.A. CATEGORY A-3

		DATE
DRAWN BY	Ed Koropsak	7/2/98
CHECKED BY		
DESIGN APPROVAL		
ENGINEER APPROVAL	R. MICHNOFF	7/2/98
SUPVR. APPROVAL		

NEXT ASSEMBLY

BROOKHAVEN NATIONAL LABORATORY
UPTON, N.Y. 11973

RHIC CONTROLS WIRING DIAGRAM
BLDG. 1005E CHASSIS CFE-5E-PS2
V102 DELAY MODULE

SIZE D
94028263
DRAWING NUMBER
REV. A

MATERIAL: ——— SCALE: NA WEIGHT: – SHEET 26 OF 35

*AUTOCAD

REV.	ZONE	ECN NO.	DATE	BY	CKR	APP.

ACS, BNL 10/15/99 9:40 AM 8263_27.dwg

BLANK PAGE

-3	-2	-1	REF DESIGNATOR	ITEM NO.	DESCRIPTION	MAT'L DWG NO.,BNL NO.
QTY REQD						

INTERPRET IN GENERAL ACCORDANCE WITH ASME Y14.24M-1989

UNLESS OTHERWISE SPECIFIED DIMENSIONS ARE IN INCHES

DECIMAL TOLERANCES
.X ±.030
.XX ±.015
.XXX ±.005
ANGULAR TOLERANCE
± .5°

NA FINISH

BREAK SHARP EDGES
MAX. XX MIN. XX

OUTSTANDING ECN

Q.A. CATEGORY A-3		DATE
DRAWN BY	Ed Koropsak	7/2/98
CHECKED BY		
DESIGN APPROVAL		
ENGINEER APPROVAL	R. MICHNOFF	7/2/98
SUPVR. APPROVAL		

NEXT ASSEMBLY

BROOKHAVEN NATIONAL LABORATORY
UPTON, N.Y. 11973

RHIC CONTROLS WIRING DIAGRAM
BLDG. 1005E CHASSIS CFE-5E-PS2
V102 DELAY MODULE

SIZE D | DRAWING NUMBER 94028263 | REV. A

MATERIAL: ——— SCALE: NA WEIGHT: – SHEET 27 OF 35

*AUTOCAD

REV.	ZONE	ECN NO.	DATE	BY	CKR	APP.

ACS, BNL 10/15/99 9:41 AM 8263_28.dwg

BLANK PAGE

-3	-2	-1	REF DESIGNATOR	ITEM NO.	DESCRIPTION	MAT'L DWG NO.,BPM. NO.
QTY REQD						

INTERPRET IN GENERAL ACCORDANCE WITH ASME Y14.24M-1989	Q.A. CATEGORY A-3	DATE	BROOKHAVEN NATIONAL LABORATORY
	DRAWN BY Ed Koropsak	7/2/98	UPTON, N.Y. 11973
UNLESS OTHERWISE SPECIFIED DIMENSIONS ARE IN INCHES	CHECKED BY		RHIC CONTROLS WIRING DIAGRAM
DECIMAL TOLERANCES .X ±.030 .XX ±.015 .XXX ±.005 ANGULAR TOLERANCE ± .5°	DESIGN APPROVAL		BLDG. 1005E CHASSIS CFE-5E-PS2
	ENGINEER APPROVAL R. MICHNOFF	7/2/98	V102 DELAY MODULE
	SUPVR. APPROVAL		SIZE D — 94028263 — REV. A
NA FINISH — BREAK SHARP EDGES MAX. XX MIN. XX	NEXT ASSEMBLY		DRAWING NUMBER
OUTSTANDING ECN			MATERIAL: ——— SCALE: NA WEIGHT: – SHEET 28 OF 35

*AUTOCAD

REV.	ZONE	ECN NO.	DATE	BY	CKR	APP.

ACS, BNL 10/5/99 10:32 AM 8263_29.dwg

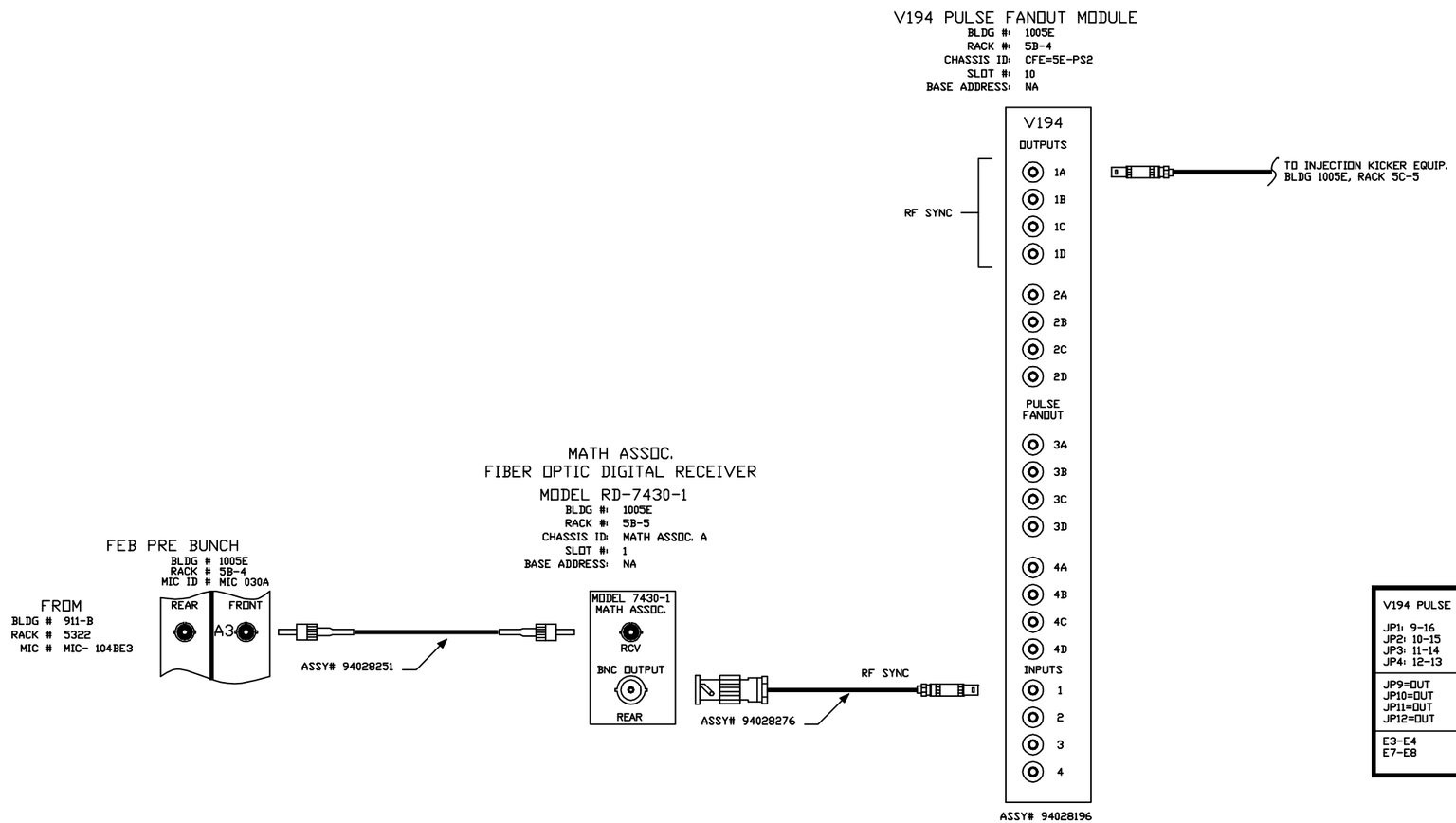

V194 PULSE FANOUT JUMPER LIST
JP1: 9-16 JP2: 10-15 JP3: 11-14 JP4: 12-13
JP9=OUT JP10=OUT JP11=OUT JP12=OUT
E3-E4 E7-E8

-3	-2	-1	REF DESIGNATOR	ITEM NO.	DESCRIPTION	MAT'L. DWG NO.,BRK. NO.
QTY REQD						

INTERPRET IN GENERAL ACCORDANCE WITH ASME Y14.24M-1989	Q.A. CATEGORY A-3	DATE	BROOKHAVEN NATIONAL LABORATORY
	DRAWN BY Ed Koropsak	7/2/98	UPTON, N.Y. 11973
UNLESS OTHERWISE SPECIFIED DIMENSIONS ARE IN INCHES	CHECKED BY		RHIC CONTROLS WIRING DIAGRAM
DECIMAL TOLERANCES .X ±.030 .XX ±.015 .XXX ±.005 ANGULAR TOLERANCE ± .5°	DESIGN APPROVAL		BLDG 1005E, CFE-5E-PS2
	ENGINEER APPROVAL R. MICHNOFF	7/2/98	V194 PULSE FANOUT MODULE
	SUPVR. APPROVAL		SIZE D — 94028263 — REV. A
NA FINISH	BREAK SHARP EDGES MAX. XX MIN. XX	NEXT ASSEMBLY	DRAWING NUMBER
OUTSTANDING ECN			MATERIAL: ——— SCALE: NA WEIGHT: – SHEET 29 OF 35

*AUTOCAD

ACS, BNL 10/15/99 9:42 AM 8263_30.dwg

RHIC RING SYSTEM

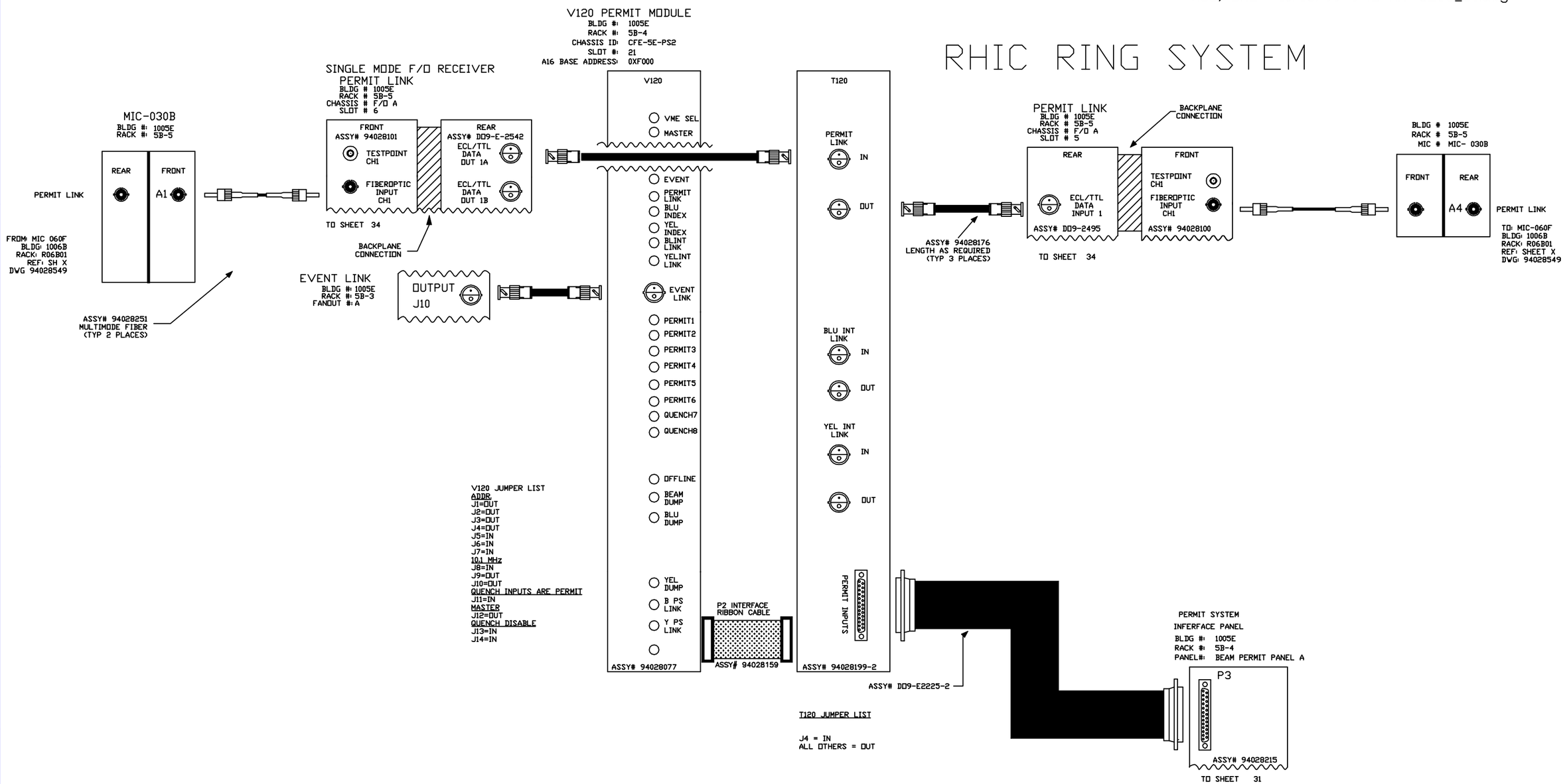

V120 JUMPER LIST

ADDR.
J1=OUT
J2=OUT
J3=OUT
J4=OUT
J5=IN
J6=IN
J7=IN
10.1 MHz
J8=IN
J9=OUT
J10=OUT
QUENCH INPUTS ARE PERMIT
J11=IN
MASTER
J12=OUT
QUENCH DISABLE
J13=IN
J14=IN

T120 JUMPER LIST

J4 = IN
ALL OTHERS = OUT

-3	-2	-1	REF DESIGNATOR	ITEM NO.	DESCRIPTION	MAT'L DWG NO./BNL NO.
QTY REQD						

INTERPRET IN GENERAL ACCORDANCE WITH ASME Y14.24M-1989

UNLESS OTHERWISE SPECIFIED DIMENSIONS ARE IN INCHES

DECIMAL TOLERANCES
.X ±.030
.XX ±.015
.XXX ±.005
ANGULAR TOLERANCE ± .5°

FINISH: NA

BREAK SHARP EDGES MAX. XX MIN. XX

OUTSTANDING ECN

Q.A. CATEGORY A-3		DATE
DRAWN BY	Phil Pape	4/3/97
CHECKED BY		
DESIGN APPROVAL		
ENGINEER APPROVAL	R. MICHNOFF	05/13/97
SUPVR. APPROVAL		

NEXT ASSEMBLY

BROOKHAVEN NATIONAL LABORATORY
UPTON, N.Y. 11973

RHIC CONTROLS WIRING DIAGRAM

BLDG. 1005E, CHASSIS CFE-5E-PS2

V120/T120 PERMIT SYSTEM

SIZE D | DRAWING NUMBER 94028263 | REV. A

MATERIAL: ——— SCALE: NA WEIGHT: – SHEET 30 OF 35

*AUTOCAD

REV.	ZONE	ECN NO.	DATE	BY	CKR	APP.

ACS, BNL 10/5/99 10:42 AM 8263_31.dwg

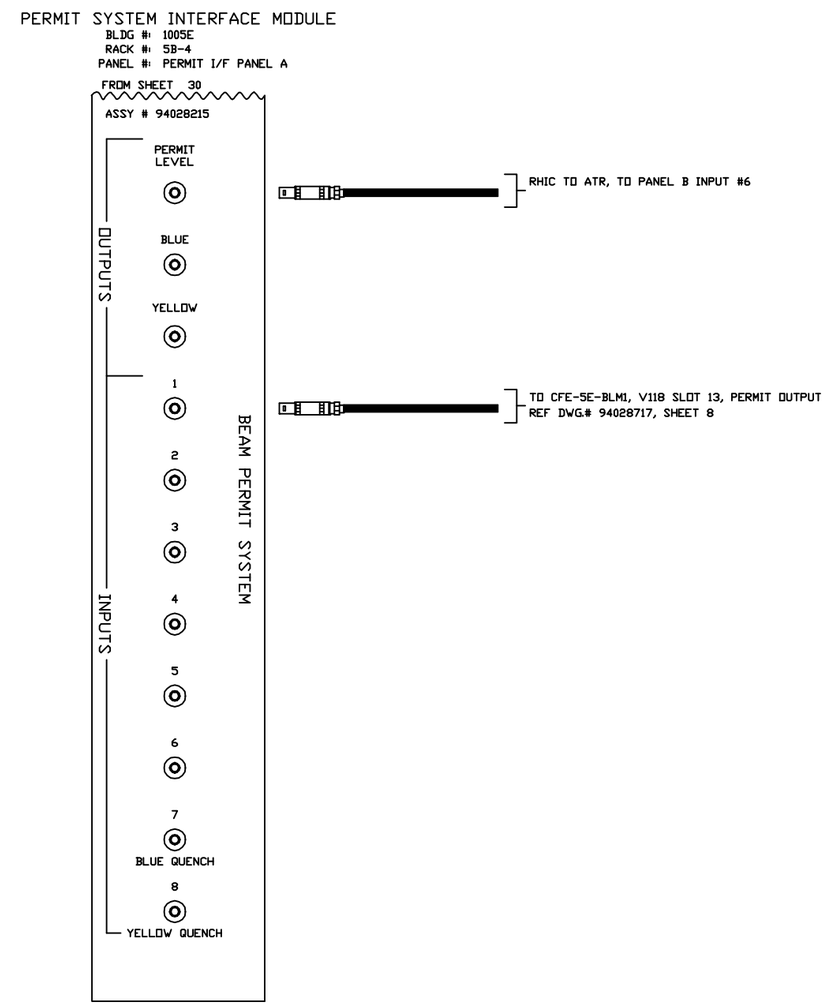

-3	-2	-1	REF DESIGNATOR	ITEM NO.	DESCRIPTION	MAT'L DWG NO./BNL NO.
QTY REQD						

INTERPRET IN GENERAL ACCORDANCE WITH ASME Y14.24M-1989

UNLESS OTHERWISE SPECIFIED DIMENSIONS ARE IN INCHES

DECIMAL TOLERANCES
.X ±.030
.XX ±.015
.XXX ±.005
ANGULAR TOLERANCE ± .5°

OUTSTANDING ECN

NA FINISH

BREAK SHARP EDGES
MAX. XX MIN. XX

Q.A. CATEGORY A-3		DATE
DRAWN BY	Phil Pape	4/14/97
CHECKED BY		
DESIGN APPROVAL		
ENGINEER APPROVAL	R. MICHNOFF	05/13/97
SUPVR. APPROVAL		

NEXT ASSEMBLY

BROOKHAVEN NATIONAL LABORATORY
UPTON, N.Y. 11973

RHIC CONTROLS WIRING DIAGRAM
BLDG. 1005E, RACK 5B-4
PERMIT SYSTEM INTERFACE PANEL

SIZE D | DRAWING NUMBER 94028263 | REV. A

MATERIAL: ——— SCALE: NA WEIGHT: – SHEET 31 OF 35

*AUTOCAD

REV.	ZONE	ECN NO.	DATE	BY	CKR	APP.

ACS, BNL 1/27/00 10:41 AM 8263_32.dwg

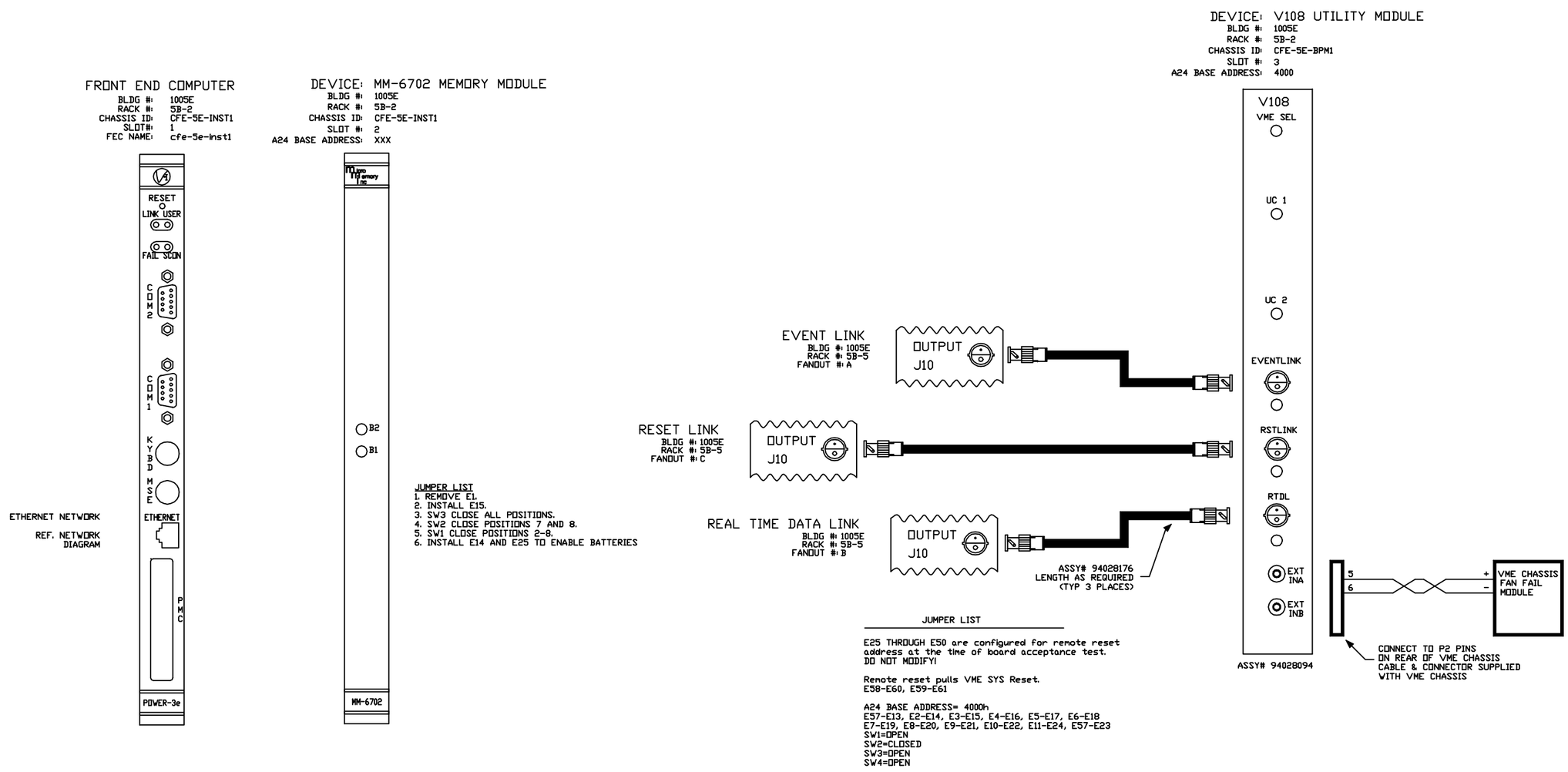

JUMPER LIST

E25 THROUGH E50 are configured for remote reset address at the time of board acceptance test.
DO NOT MODIFY!

Remote reset pulls VME SYS Reset.
E58-E60, E59-E61

A24 BASE ADDRESS= 4000h
E57-E13, E2-E14, E3-E15, E4-E16, E5-E17, E6-E18
E7-E19, E8-E20, E9-E21, E10-E22, E11-E24, E57-E23
SW1=OPEN
SW2=CLOSED
SW3=OPEN
SW4=OPEN

-3	-2	-1	REF DESIGNATOR	ITEM NO.	DESCRIPTION	MAT'L DWG NO./BNL NO.
QTY REQD						

INTERPRET IN GENERAL ACCORDANCE WITH ASME Y14.24M-1989	Q.A. CATEGORY A-3	DATE	BROOKHAVEN NATIONAL LABORATORY
	DRAWN BY Ed Koropsak	7/2/98	UPTON, N.Y. 11973
UNLESS OTHERWISE SPECIFIED DIMENSIONS ARE IN INCHES	CHECKED BY		RHIC CONTROLS WIRING DIAGRAM
DECIMAL TOLERANCES .X ±.030 .XX ±.015 .XXX ±.005 ANGULAR TOLERANCE ± .5°	DESIGN APPROVAL		BLDG. 1005E, VME CHASSIS CFE-5E-BPM1
	ENGINEER APPROVAL R. MICHNOFF	7/2/98	FT END COMP/V108 UTIL MODULE
	SUPVR. APPROVAL		SIZE D — DRAWING NUMBER 94028263 — REV. A
OUTSTANDING ECN	NA FINISH	BREAK SHARP EDGES MAX. XX MIN. XX	NEXT ASSEMBLY
			MATERIAL: ——— SCALE: NA WEIGHT: – SHEET 32 OF 35

*AUTOCAD

REV.	ZONE	ECN NO.	DATE	BY	CKR	APP.

ACS, BNL 10/5/99 10:50 AM 8263_33.dwg

FRONT END COMPUTER
BLDG #: 1005E
RACK #: 5B-3
CHASSIS ID: CFE-5E-BPM1
SLOT#: 1
FEC NAME: cfe-5e-bpm1

DEVICE: MM-6702 MEMORY MODULE
BLDG #: 1005E
RACK #: 5B-3
CHASSIS ID: CFE-5E-BPM1
SLOT #: 2
A24 BASE ADDRESS: XXX

DEVICE: V108 UTILITY MODULE
BLDG #: 1005E
RACK #: 5B-3
CHASSIS ID: CFE-5E-BPM1
SLOT #: 3
A24 BASE ADDRESS: 0X004000

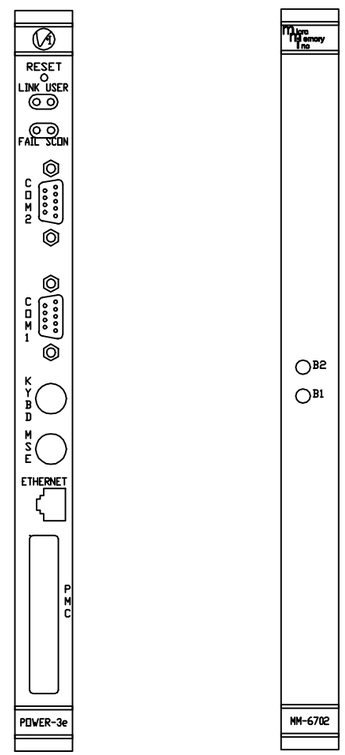

ETHERNET NETWORK

REF. NETWORK DIAGRAM

JUMPER LIST
1. REMOVE E1.
2. INSTALL E15.
3. SW3 CLOSE ALL POSITIONS.
4. SW2 CLOSE POSITIONS 7 AND 8.
5. SW1 CLOSE POSITIONS 2-8.
6. INSTALL E14 AND E25 TO ENABLE BATTERIES

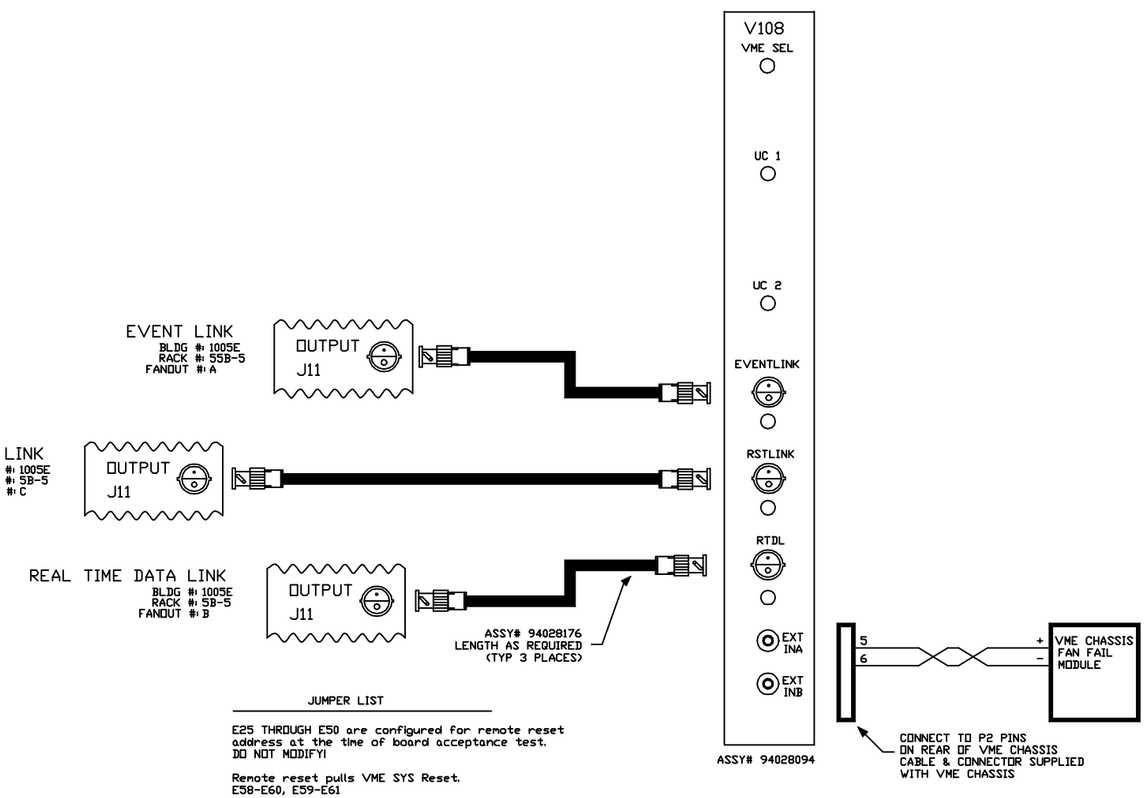

JUMPER LIST

E25 THROUGH E50 are configured for remote reset address at the time of board acceptance test.
DO NOT MODIFY!

Remote reset pulls VME SYS Reset.
E58-E60, E59-E61

A24 BASE ADDRESS= 4000h
E57-E13, E2-E14, E3-E15, E4-E16, E5-E17, E6-E18
E7-E19, E8-E20, E9-E21, E10-E22, E11-E24, E57-E23
SW1=OPEN
SW2=CLOSED
SW3=OPEN
SW4=OPEN

-3	-2	-1	REF DESIGNATOR	ITEM NO.	DESCRIPTION	MATL DWG NO./BNL NO.
QTY REQD						

INTERPRET IN GENERAL ACCORDANCE WITH ASME Y14.24M-1989

UNLESS OTHERWISE SPECIFIED DIMENSIONS ARE IN INCHES

DECIMAL TOLERANCES
.X ±.030
.XX ±.015
.XXX ±.005
ANGULAR TOLERANCE
± .5°

NA FINISH

BREAK SHARP EDGES
MAX. XX MIN. XX

OUTSTANDING ECN

Q.A. CATEGORY A-3		DATE
DRAWN BY	Phil Pape	4/4/97
CHECKED BY		
DESIGN APPROVAL		
ENGINEER APPROVAL	R. MICHNOFF	05/13/97
SUPVR. APPROVAL		

NEXT ASSEMBLY

BROOKHAVEN NATIONAL LABORATORY
UPTON, N.Y. 11973

RHIC CONTROLS WIRING DIAGRAM

BLDG. 1005E, VME CHASSIS CFE-5E-BPM1

FT END COMP/V108 UTIL MODULE

SIZE D | DRAWING NUMBER 94028263 | REV. A

MATERIAL: ——— SCALE: NA WEIGHT: — SHEET 33 OF 35

*AUTOCAD

REV.	ZONE	ECN NO.	DATE	BY	CKR	APP.

ACS, BNL 10/15/99 9:50 AM 8263_34.dwg

TRANSFER LINE SYSTEM

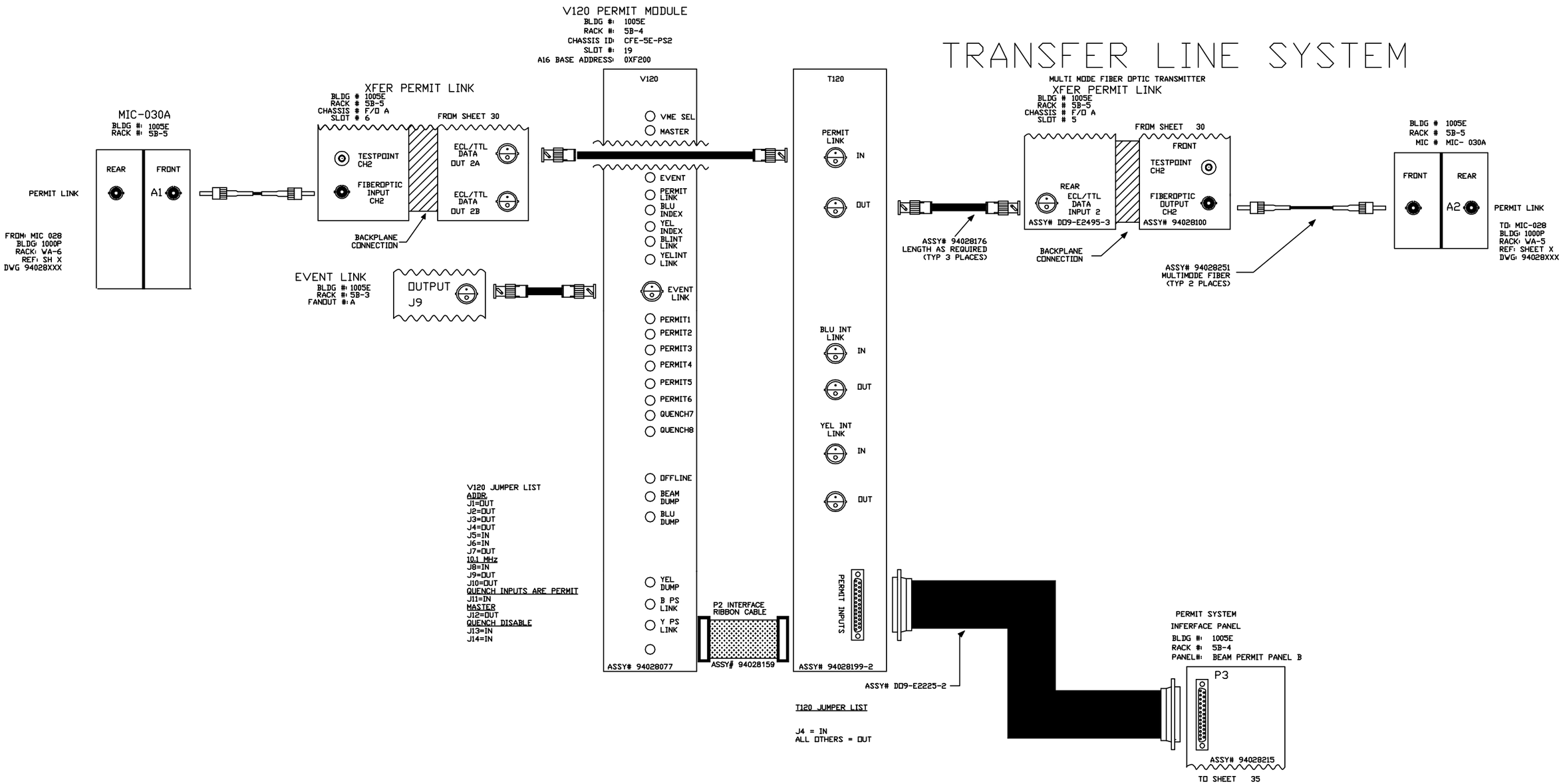

-3	-2	-1	REF DESIGNATOR	ITEM NO.	DESCRIPTION	MAT'L DWG NO./BNL NO.
QTY REQD						

INTERPRET IN GENERAL ACCORDANCE WITH ASME Y14.24M-1989

UNLESS OTHERWISE SPECIFIED DIMENSIONS ARE IN INCHES

DECIMAL TOLERANCES
.X ±.030
.XX ±.015
.XXX ±.005
ANGULAR TOLERANCE ± .5°

NA FINISH

BREAK SHARP EDGES MAX. XX MIN. XX

OUTSTANDING ECN

Q.A. CATEGORY A-3		DATE
DRAWN BY	Ed Koropsak	10/26/98
CHECKED BY		
DESIGN APPROVAL		
ENGINEER APPROVAL	R. MICHNOFF	10/26/98
SUPVR. APPROVAL		

NEXT ASSEMBLY

BROOKHAVEN NATIONAL LABORATORY
UPTON, N.Y. 11973

RHIC CONTROLS WIRING DIAGRAM

BLDG. 1005E, CHASSIS CFE-5E-PS2

V120/T120 PERMIT SYSTEM

SIZE D | 94028263 | REV. A

DRAWING NUMBER

MATERIAL: ——— SCALE: NA WEIGHT: – SHEET 34 OF 35

*AUTOCAD

REV.	ZONE	ECN NO.	DATE	BY	CKR	APP.

ACS, BNL 10/5/99 10:58 AM 8263_35.dwg

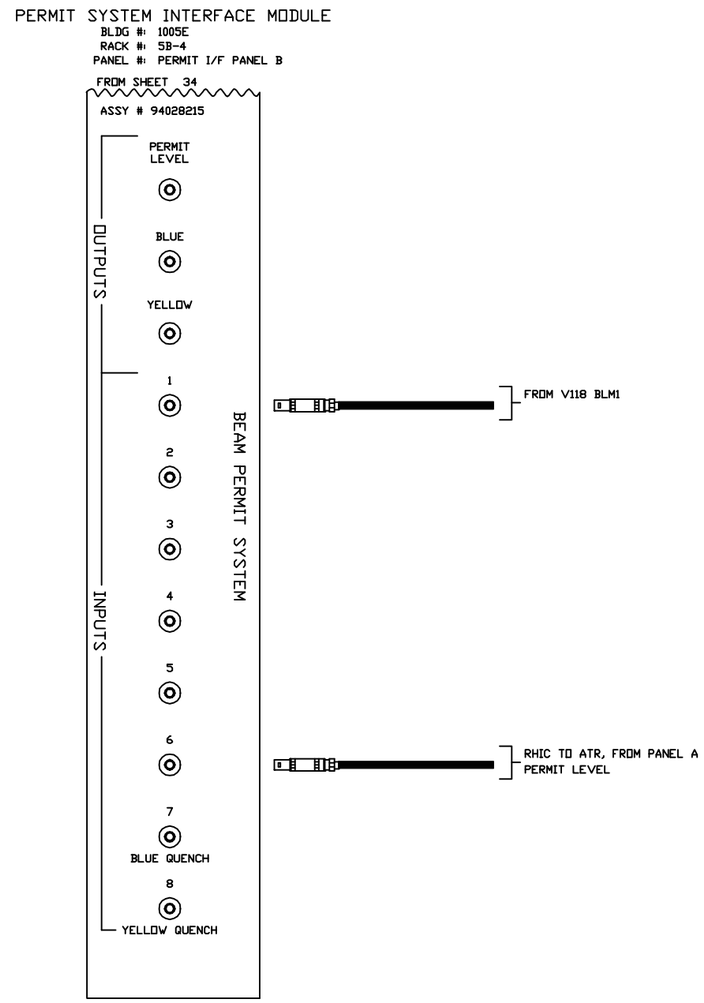

-3	-2	-1	REF DESIGNATOR	ITEM NO.	DESCRIPTION	MAT'L DWG NO./BNL NO.
QTY REQD						

INTERPRET IN GENERAL ACCORDANCE WITH ASME Y14.24M-1989

UNLESS OTHERWISE SPECIFIED DIMENSIONS ARE IN INCHES

DECIMAL TOLERANCES
.X ±.030
.XX ±.015
.XXX ±.005
ANGULAR TOLERANCE ± .5°

OUTSTANDING ECN

NA FINISH

BREAK SHARP EDGES MAX. XX MIN. XX

Q.A. CATEGORY A-3		DATE
DRAWN BY	Ed Koropsak	10/26/98
CHECKED BY		
DESIGN APPROVAL		
ENGINEER APPROVAL	R. MICHNOFF	10/26/98
SUPVR. APPROVAL		

NEXT ASSEMBLY

BROOKHAVEN NATIONAL LABORATORY
UPTON, N.Y. 11973

RHIC CONTROLS WIRING DIAGRAM
BLDG. 1005E, RACK 5B-4
PERMIT SYSTEM INTERFACE PANEL

SIZE D | DRAWING NUMBER 94028263 | REV. A

MATERIAL: ——— SCALE: NA WEIGHT: – SHEET 35 OF 35

*AUTOCAD