RHIC Accelerator Controls Section
Bldg. 1004B Wiring Diagrams
BNL Drawing Number 94028529

Brookhaven National Laboratory, Upton, New York 11973

Created By: Ed Koropsak
Edited By: Phil Pape
Last Updated 5/5/2004

NOTE: Sheets 23, 32-51, 61-65, 75-79, 115-118, 125-138 are Blank

Power Distribution
- ✍ Rack R04B02 (Sheet 1)
- ✍ Rack R04B03, Rack R04B04 (Sheet 2)
- ✍ Rack R04B05, Rack R04B06 (Sheet 3)
- ✍ Rack R04B07, Rack R04B19 (Sheet 4)

SPARES
- ✍ MADC Channels (Sheet 98)
- ✍ I/O Channels (Sheet 99)

Serial Links
- ✍ AGS Event Link (Sheet 5)
- ✍ RHIC Event Link (Sheet 6,7,8,9,10)
- ✍ Real Time Data Link (RTDL) (Sheet 11,12,13,14)
- ✍ Reset Link (Sheet 15,16,17,18)
- ✍ Beam Sync Yellow Link (Sheet 19)
- ✍ Beam Sync Blue Link (Sheet 20)
- ✍ RF Rebucket Triggers (Sheet 114)

VME Chassis CFE-4B-RTDL modules
- ✍ Front End Computer, V108 Utility Module (Sheet 88)
- ✍ BIT 3 Bus Extenders (Sheet 88)
- ✍ V105 RTDL Encoder Module (Sheet 11)
- ✍ V107 Timestamp Module (Sheet 21)
- ✍ V106 Input Modules (Sheet 22)
- ✍ V191 RTDL Bus Extenders (Sheet 90)

VME Chassis CEX-4B-RTDL1 modules
- ✍ BIT 3 Bus Extender (Sheet 88)
- ✍ V106 Input Modules (Sheet 24, 25, 26, 27)
- ✍ V191 RTDL Bus Extenders (Sheet 90)
- ✍ VMIVME 5576 Reflective Memory (Sheet 93)

VME Chassis CEX-4B-RTDL2 modules
- ✍ BIT 3 Bus Extender (Sheet 88)
- ✍ V106 Input Modules (Sheet 28, 29, 29_1, 29_2, 30, 31)
- ✍ V191 RTDL Bus Extenders (Sheet 90)

VME Chassis CFE-4B-EVT modules
- ✍ Front End Computer, V108 Utility Module (Sheet 86)
- ✍ V100 EVENT LINK Encoder Module (Sheet 6)
- ✍ V101 EVENT LINK Input Modules (Sheet 80, 81,82, 83)

VME Chassis CFE-4B-TIME modules
- ✍ Front End Computer, V108 Utility Module (Sheet 87)
- ✍ V102, V104,V194 AGS Decoders/Fanout (Sheet 95)
- ✍ V102, V104,V194 RHIC Decoders/Fanout (Sheet 96, 97)
- ✍ V120 Permit Modules (Sheet 84)
- ✍ Permit System Interface Panels (Sheet 85)
- ✍ Permit Pulse Module (Sheet 106)

VME Chassis CFE-4B-PS1 modules (BLUE)
- ✍ Front End Computer, V108 Utility Module (Sheet 92)
- ✍ V113/V114 MADC System (Sheet 52)
- ✍ V115 WFG A: bo3-qf6, bo3-qd7 (Sheet 53)
- ✍ V115 WFG B: bi4-qd2, bi4-qf3 (Sheet 54)
- ✍ V115 WFG C: bi4-qd6, bi4-qf7 (Sheet 55)
- ✍ V115 WFG D: b4-q89, bi4-qf9 (Sheet 56)
- ✍ V115 WFG E: bo3-qf8, b4-dhx (Sheet 57)
- ✍ V115 WFG F: b4-dh0 (Sheet 58)
- ✍ V115 WFG G: bo3-qd1, bi4-qf1 (Sheet 59)
- ✍ V115 WFG H: bo3-qf2, bo3-qd3 (Sheet 60)

VME Chassis CFE-4B-PS2 modules (YELLOW)
- ✍ Front End Computer, V108 Utility Module (Sheet 94)
- ✍ V113/V114 MADC System (Sheet 66)
- ✍ V115 WFG A: yi3-qd6, yi3-qf7 (Sheet 67)
- ✍ V115 WFG B: yo4-qf2, yo4-qd3 (Sheet 68)
- ✍ V115 WFG C: yo4-qf6, yo4-qd7 (Sheet 69)
- ✍ V115 WFG D: y4-q89, yo4-qf8 (Sheet 70)
- ✍ V115 WFG E: yi3-qf9, y4-dh0 (Sheet 71)
- ✍ V115 WFG F: yo4-sxd9, yo4-sxf10 (Sheet 72)
- ✍ V115 WFG G: yi3-qf1, yo4-qd1 (Sheet 73)
- ✍ V115 WFG H: yi3-qd2, yi3-qf3 (Sheet 74)

VME Chassis CFE-4B-PS3 modules

- ✍ Front End Computer, V108 Utility Module (Sheet 91)
- ✍ V115 WFG A: RTDL Input (Sheet 102)
  rt-yrad-steer, rt-yfreq-steer
- ✍ V115 WFG B: RTDL Input (Sheet 102)
  rt-brad-steer, rt-bfreq-steer
- ✍ V115 WFG C: RTDL Input (Sheet 103)
  rt-yphase, rt-bphase
- ✍ V115 WFG D: RTDL Input (Sheet 103)
  rt-yrigidity, rt-brigidity
- ✍ V115 WFG E: RTDL Input (Sheet 104)
  rt-brampvar, rt-yrampvar
- ✍ V115 WFG F: RTDL Input (Sheet 104)
  rt-spare7, rt-spare8
- ✍ V115 WFG G: RTDL Input (Sheet 105)
  rt-spare9, rt-spare10
- ✍ V115 WFG H: RTDL Input (Sheet 105)
  rt-spare11, rt-spare12
- ✍ V115 WFG I: RTDL Input (Sheet 107)
  rt-bbdot, rt-ybdot
- ✍ V115 WFG J: RTDL Input (Sheet 107)
  rt-knob1, rt-knob2
- ✍ V115 WFG K: RTDL Input (Sheet 108)
  rt-knob3, rt-knob4
- ✍ V115 WFG L: RTDL Input (Sheet 108)
  rt-knob5, rt-knob6
- ✍ V115 WFG M: RTDL Input (Sheet 109)
  rt-yradiusjump, rt-bradiusjump

VME Chassis CFE-4B-PS4 modules

- ✍ Front End Computer, V108 Utility Module (Sheet 110)
- ✍ Allen Bradley PLC (Sheet 111)

VME Chassis CFE-4B-P5 modules (BLUE)

- ✍ Front End Computer, V108 Utility Module (Sheet 119)
- ✍ V113/V114 MADC System (Sheet 52)
- ✍ V102, RHIC Decoder:Chipmunk (Sheet 112)
- ✍ SIS3803 Scaler:Chipmunk (Sheet 113)
- ✍ V115 WFG A: bo3-tq4, bo3-tq5 (Sheet 120)
- ✍ V115 WFG B: bo3-tq6, bi4-tq4 (Sheet 121)
- ✍ V115 WFG C: bi4-tq5, bi4-tq6 (Sheet 122)
- ✍ V115 WFG D: blue HV quad offset (Sheet 123)
- ✍ V115 WFG E: blue main dipole, main quad (Sheet 124)
- ✍ DX Heater PS MADC Readbacks (Sheet 100)
- ✍ Room Temp, Blue 208-V MADC Readbacks (Sheet 100)

VME Chassis CFE-4B-PS6 modules (YELLOW)

- ✍ Front End Computer, V108 Utility Module (Sheet 139)
- ✍ V113/V114 MADC System (Sheet 66)
- ✍ V115 WFG A: yi3-tq4, yi3-tq5 (Sheet 140)
- ✍ V115 WFG B: yi3-tq6, yo4-tq4 (Sheet 141)
- ✍ V115 WFG C: yo4-tq5, yo4-tq6 (Sheet 142)
- ✍ V115 WFG D: yellow HV quad offset (Sheet 143)
- ✍ V115 WFG E: yellow main dipole, main quad (Sh. 144)
- ✍ Vacuum, Yellow 208-V MADC Readbacks (Sheet 100)

REV.	ZONE	ECN NO.	DATE	BY	CKR	APP.

ACS, BNL 10/16/98 1:16 PM 8529_01.dwg

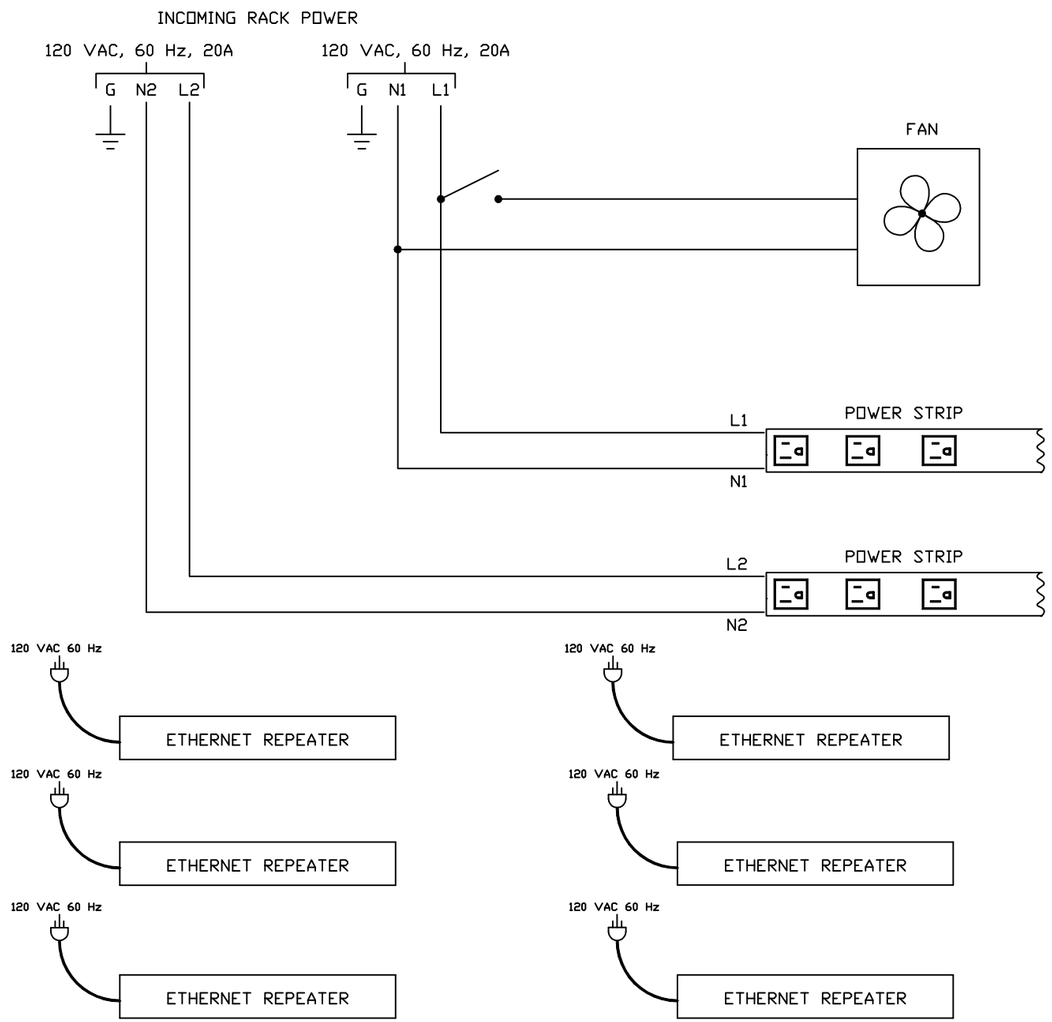

NOTE: ALL 120 VAC, 60 Hz POWER CORDS
PLUG INTO POWER STRIP OUTLETS

RACK R04B02

-3	-2	-1	REF DESIGNATOR	ITEM NO.	DESCRIPTION	MAT'L. DWG NO.,BNL NO.
		X		11	CABLE ASSY, POWER SUPPLY TO MADC A/D I/O PANEL (3 CABLES/PS)	
		X		10	CABLE ASSY, LOW RES PS IF MODULE TO POWER SUPPLY	
		X		9	PERMIT SYSTEM INTERFACE CABLE, T120 TO PERMIT SYSTEM INTERFACE PANEL	D09-E2225-2
		X		8	SERIAL LINK TWINAX CABLE, LENGTH AS REQUIRED	94028176
		X		7	SERIAL LINK TWINAX CABLE, 1 FT	94028176
		X		6	DUPLEX MULTIMODE FIBER OPTIC CABLE, T115 TO LOW RES PS INTERFACE MODULE	94028249
		X		5	SINGLE MODE FIBER OPTIC CABLE	94028251
		X		4	MADC A/D I/O CABLE	94028216
		X		3	TRANSITION MODULE P2 RIBBON CABLE, V115, V120	94028159
		X		2	MADC V113 TO V114 P2 INTERFACE RIBBON CABLE	94028218
		X		1	NETWORK CABLE TO FRONT END COMPUTER	

QTY REQD

INTERPRET IN GENERAL ACCORDANCE WITH ASME Y14.24M-1989

UNLESS OTHERWISE SPECIFIED DIMENSIONS ARE IN INCHES

DECIMAL TOLERANCES
.X ±.030
.XX ±.015
.XXX ±.005
ANGULAR TOLERANCE
± .5°

OUTSTANDING ECN

NA FINISH

BREAK SHARP EDGES
MAX. XX MIN. XX

Q.A. CATEGORY A-3		DATE	BROOKHAVEN NATIONAL LABORATORY
DRAWN BY	Phil Pape	11/12/97	UPTON, N.Y. 11973
CHECKED BY			RHIC CONTROLS WIRING DIAGRAM
DESIGN APPROVAL			SERVICE BLDG. RACK R04B02
ENGINEER APPROVAL	R. MICHNOFF	11/21/97	POWER DISTRIBUTION
SUPVR. APPROVAL			

NEXT ASSEMBLY

SIZE D | 94028529 DRAWING NUMBER | REV. A

MATERIAL: ——— SCALE: NA WEIGHT: – SHEET 1 / 101

1 *AUTOCAD

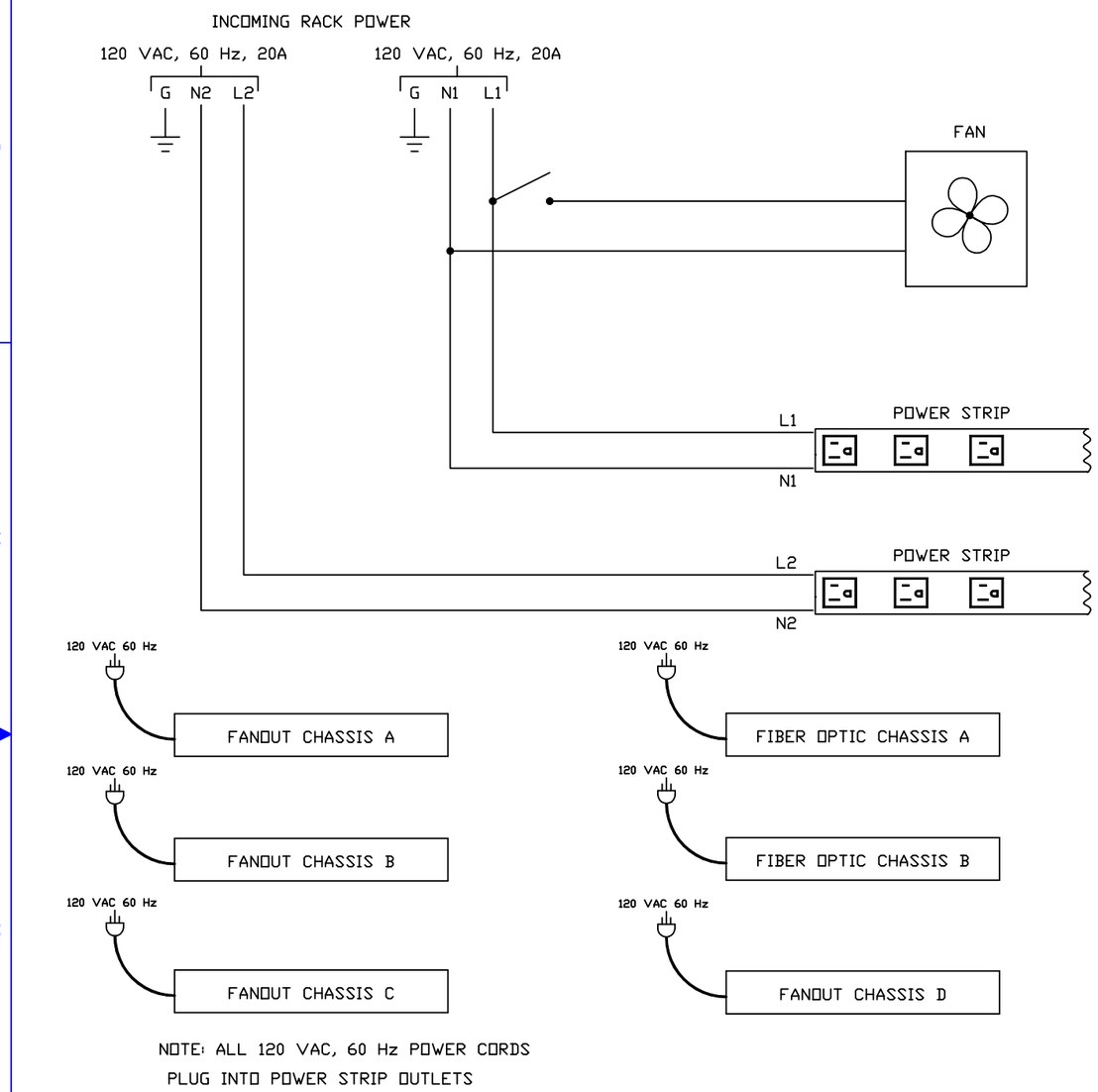

RACK R4B03

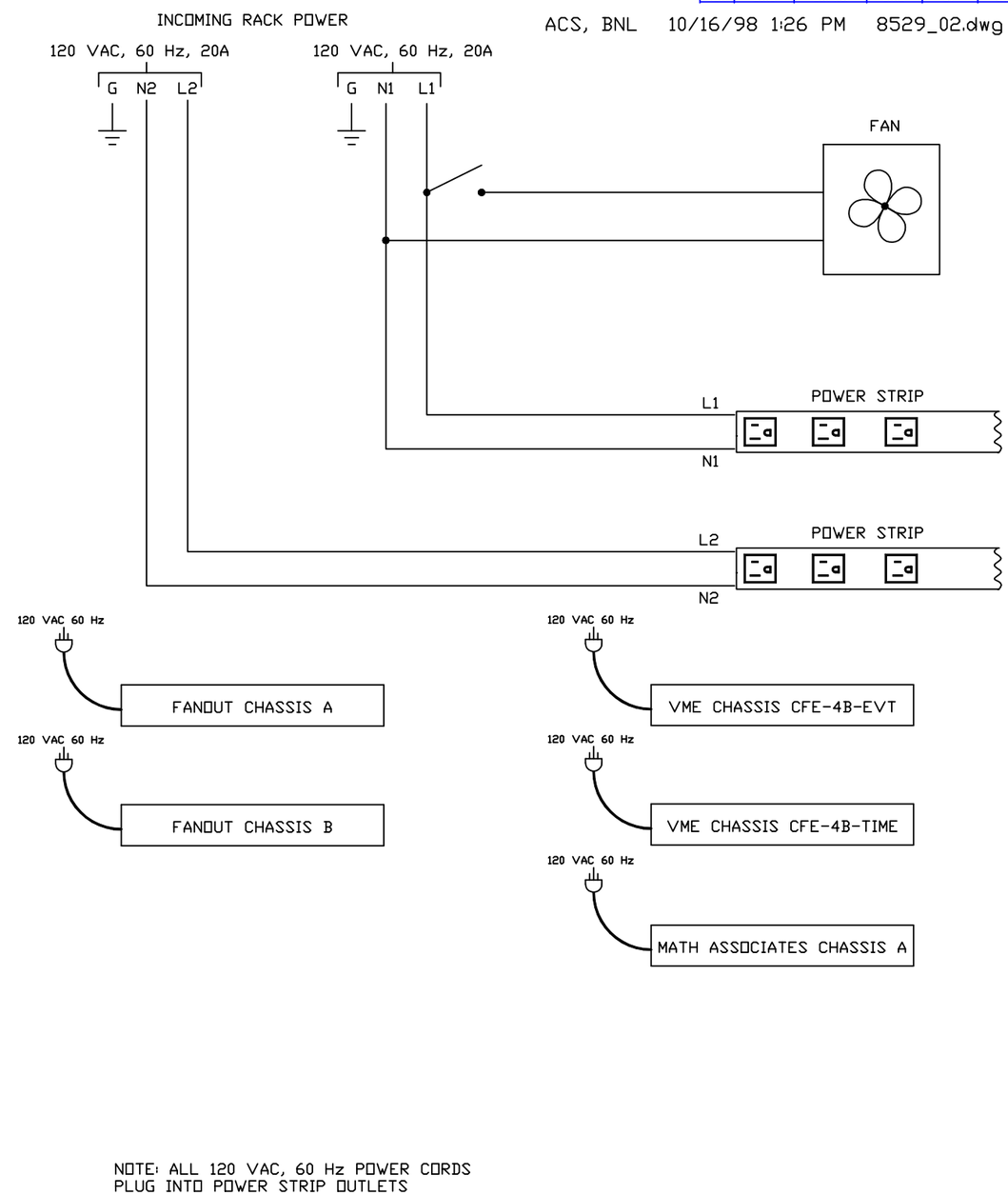

RACK R4B04

REV.	ZONE	ECN NO.	DATE	BY	CKR	APP.

ACS, BNL 10/16/98 1:26 PM 8529_02.dwg

-3	-2	-1	REF DESIGNATOR	ITEM NO.	DESCRIPTION	MAT'L. DWG NO./JAN. NO.
QTY REQD						

INTERPRET IN GENERAL ACCORDANCE WITH ASME Y14.24M-1989

UNLESS OTHERWISE SPECIFIED DIMENSIONS ARE IN INCHES

DECIMAL TOLERANCES
.X ±.030
.XX ±.015
.XXX ±.005
ANGULAR TOLERANCE
± .5°

OUTSTANDING ECN

NA FINISH

BREAK SHARP EDGES
MAX. XX MIN. XX

Q.A. CATEGORY A-3		DATE
DRAWN BY	Phil Pape	11/21/97
CHECKED BY		
DESIGN APPROVAL		
ENGINEER APPROVAL	R. MICHNOFF	11/21/97
SUPVR. APPROVAL		

NEXT ASSEMBLY

BROOKHAVEN NATIONAL LABORATORY
UPTON, N.Y. 11973

RHIC CONTROLS WIRING DIAGRAM
SERVICE BLDG. 1004B RACK R4B03, R4B04
POWER DISTRIBUTION

SIZE D | DRAWING NUMBER 94028529 | REV. A

MATERIAL: ——— SCALE: NA WEIGHT: – SHEET 2 / 101

*AUTOCAD

REV.	ZONE	ECN NO.	DATE	BY	CKR	APP.

Controls, C-AD 4/23/2004 2:10 PM 8529_03.dwg

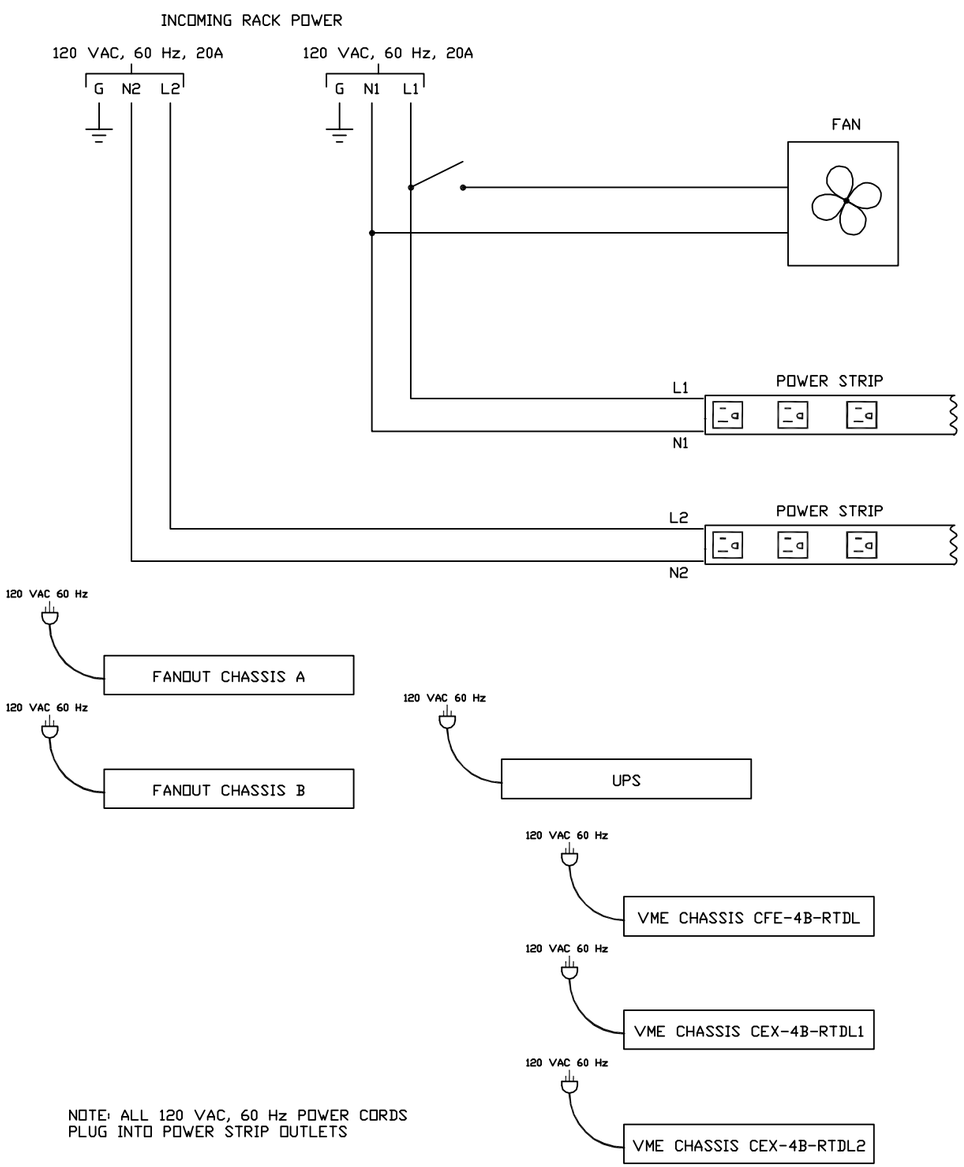

NOTE: ALL 120 VAC, 60 Hz POWER CORDS
PLUG INTO POWER STRIP OUTLETS

RACK R4B05

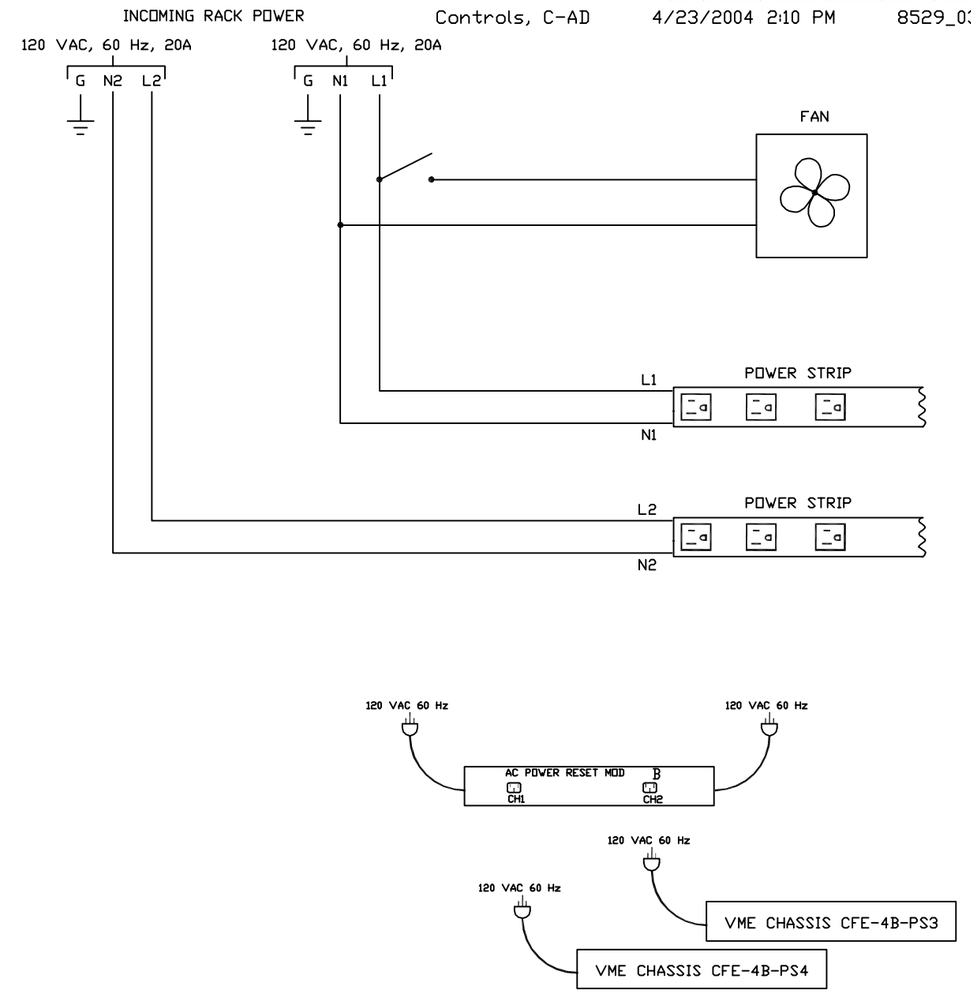

NOTE: ALL 120 VAC, 60 Hz POWER CORDS
PLUG INTO POWER STRIP OUTLETS

RACK R4B06

-3	-2	-1	REF DESIGNATOR	ITEM NO.	DESCRIPTION	MAT'L DWG NO./PART NO.
QTY REQD						

INTERPRET IN GENERAL ACCORDANCE WITH ASME Y14.24M-1989	Q.A. CATEGORY A-3	DATE	BROOKHAVEN NATIONAL LABORATORY UPTON, N.Y. 11973
	DRAWN BY Phil Pape	11/21/97	
UNLESS OTHERWISE SPECIFIED DIMENSIONS ARE IN INCHES	CHECKED BY		RHIC CONTROLS WIRING DIAGRAM
DECIMAL TOLERANCES .X ±.030 .XX ±.015 .XXX ±.005 ANGULAR TOLERANCE ± .5°	DESIGN APPROVAL		SERVICE BLDG. 1004B RACK R4B05, R4B06
	ENGINEER APPROVAL R. MICHNOFF	11/21/97	POWER DISTRIBUTION
	SUPVR. APPROVAL		SIZE D / DRAWING NUMBER 94028529 / REV. A
NA FINISH	BREAK SHARP EDGES MAX. XX MIN. XX	NEXT ASSEMBLY	
OUTSTANDING ECN			MATERIAL: —— SCALE: NA WEIGHT: — SHEET 3 / 101

*AUTOCAD

Controls, C-AD 4/23/2004 2:12 PM 8529_04.dwg

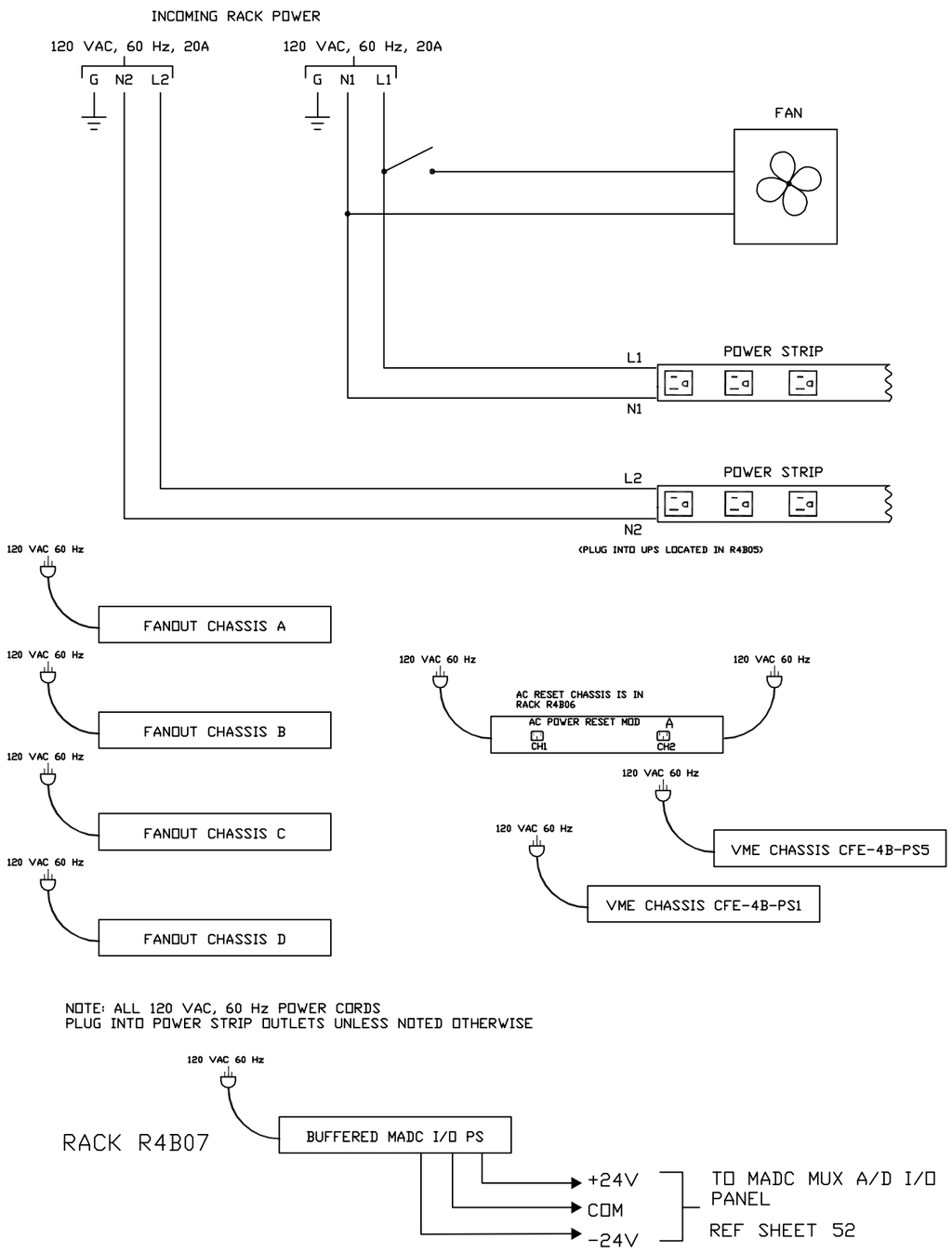

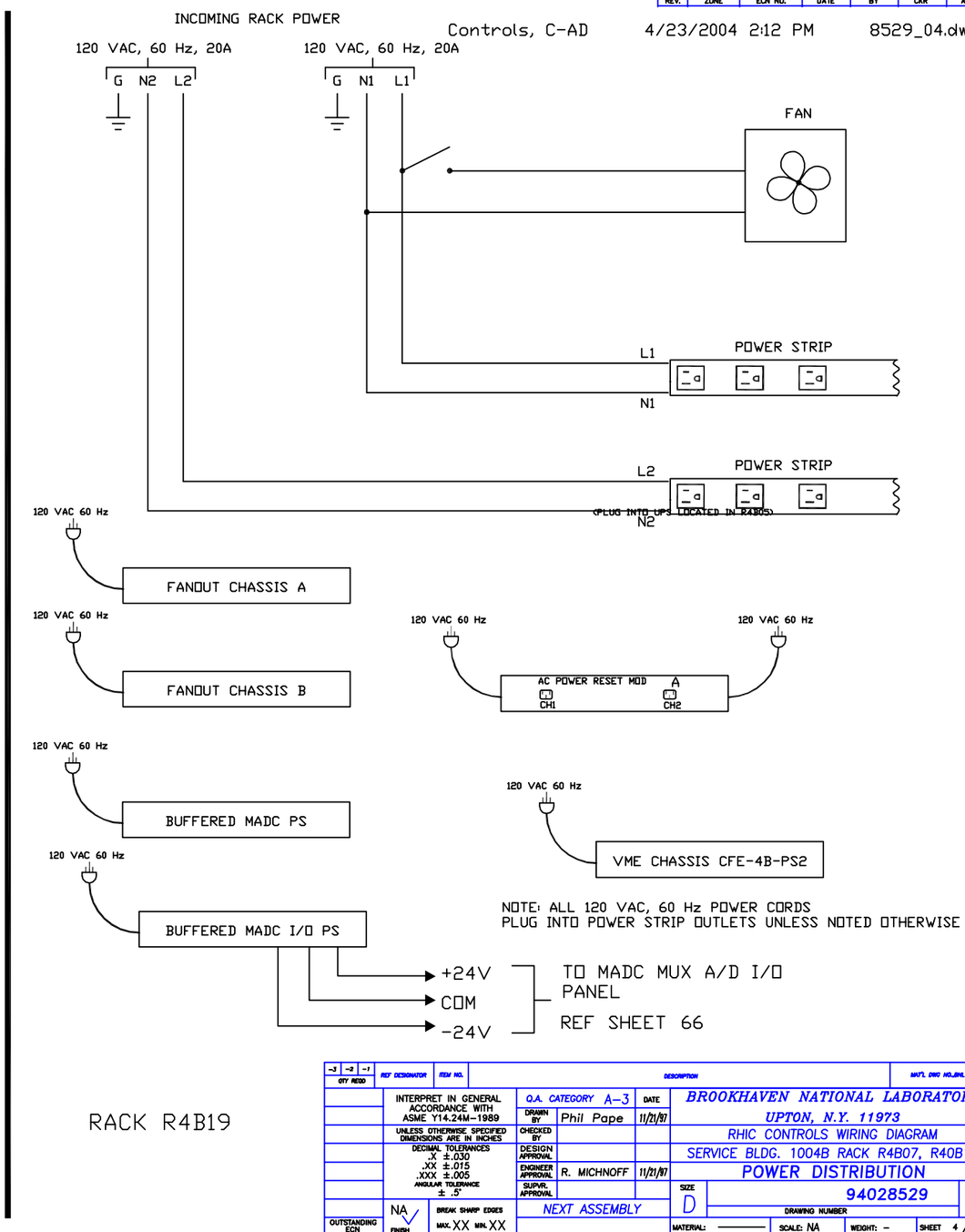

REV.	ZONE	ECN NO.	DATE	BY	CKR	APP.

INTERPRET IN GENERAL ACCORDANCE WITH ASME Y14.24M-1989	Q.A. CATEGORY A-3	DATE	BROOKHAVEN NATIONAL LABORATORY UPTON, N.Y. 11973	
	DRAWN BY Phil Pape	11/21/97		
UNLESS OTHERWISE SPECIFIED DIMENSIONS ARE IN INCHES	CHECKED BY		RHIC CONTROLS WIRING DIAGRAM	
DECIMAL TOLERANCES .X ±.030 .XX ±.015 .XXX ±.005 ANGULAR TOLERANCE ± .5°	DESIGN APPROVAL		SERVICE BLDG. 1004B RACK R4B07, R40B19	
	ENGINEER APPROVAL R. MICHNOFF	11/21/97	POWER DISTRIBUTION	
	SUPVR. APPROVAL		SIZE D — 94028529 — REV. A	
NA FINISH	BREAK SHARP EDGES MAX. XX MIN. XX	NEXT ASSEMBLY	DRAWING NUMBER	
OUTSTANDING ECN			MATERIAL: — SCALE: NA WEIGHT: –	SHEET 4 / 101

*AUTOCAD

ACS, BNL 10/16/98 1:30 PM 8529_05.dwg

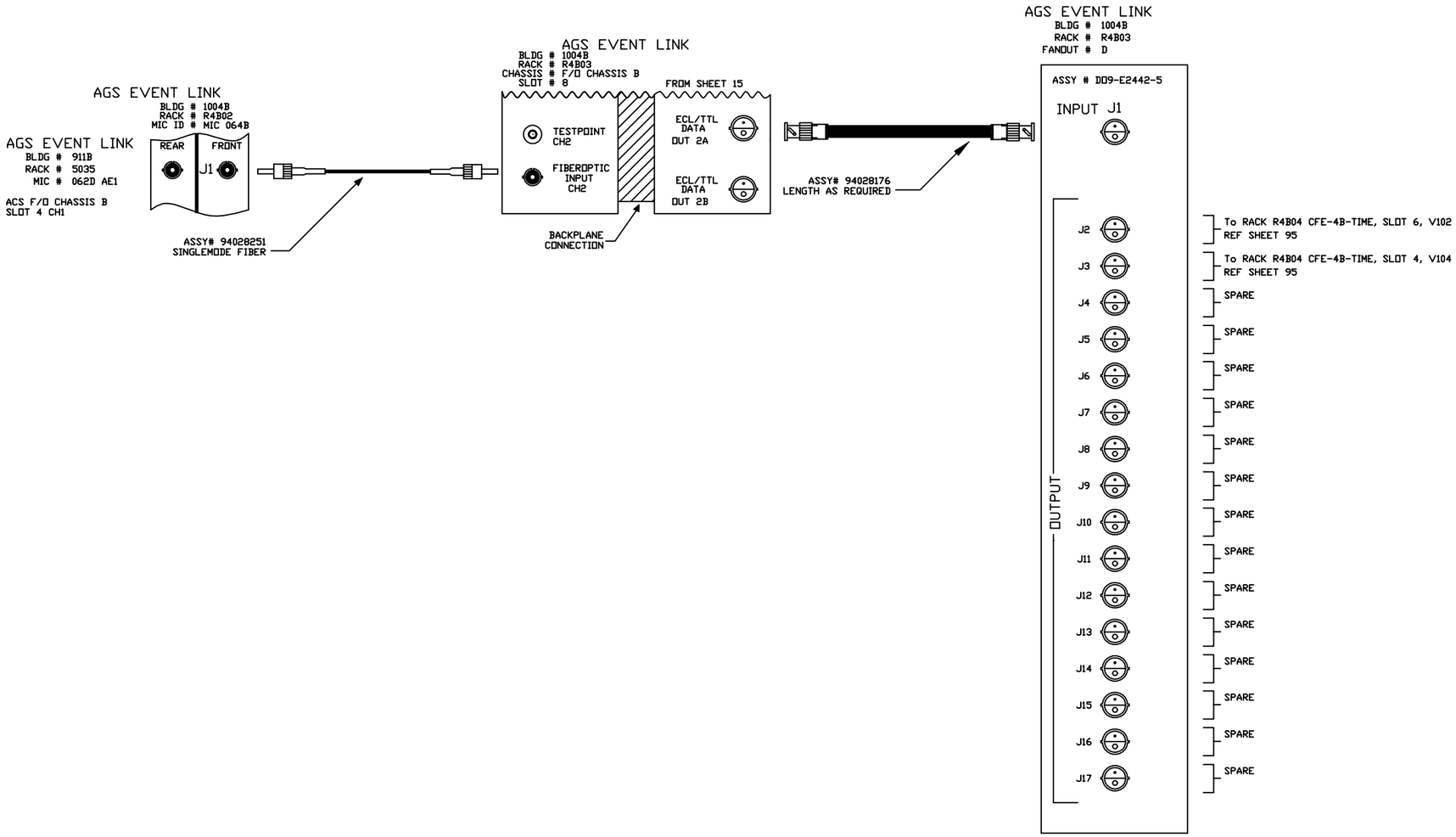

-3	-2	-1	REF DESIGNATOR	ITEM NO.	DESCRIPTION	MAT'L. DWG NO./INL NO.
QTY REQD						

INTERPRET IN GENERAL ACCORDANCE WITH ASME Y14.24M-1989

UNLESS OTHERWISE SPECIFIED DIMENSIONS ARE IN INCHES

DECIMAL TOLERANCES
.X ±.030
.XX ±.015
.XXX ±.005
ANGULAR TOLERANCE
± .5°

NA FINISH

BREAK SHARP EDGES
MAX. XX MIN. XX

OUTSTANDING ECN

Q.A. CATEGORY A-3		DATE
DRAWN BY	Phil Pape	11/21/97
CHECKED BY		
DESIGN APPROVAL		
ENGINEER APPROVAL	R. MICHNOFF	11/21/97
SUPVR. APPROVAL		

NEXT ASSEMBLY

BROOKHAVEN NATIONAL LABORATORY
UPTON, N.Y. 11973

RHIC CONTROLS WIRING DIAGRAM

SERVICE BLDG 1004B

AGS EVENT LINK

SIZE D | DRAWING NUMBER 94028529 | REV. A

MATERIAL: ——— SCALE: NA WEIGHT: – SHEET 5 / 101

*AUTOCAD

ACS, BNL 1/28/00 1:44 PM 8529_06.dwg

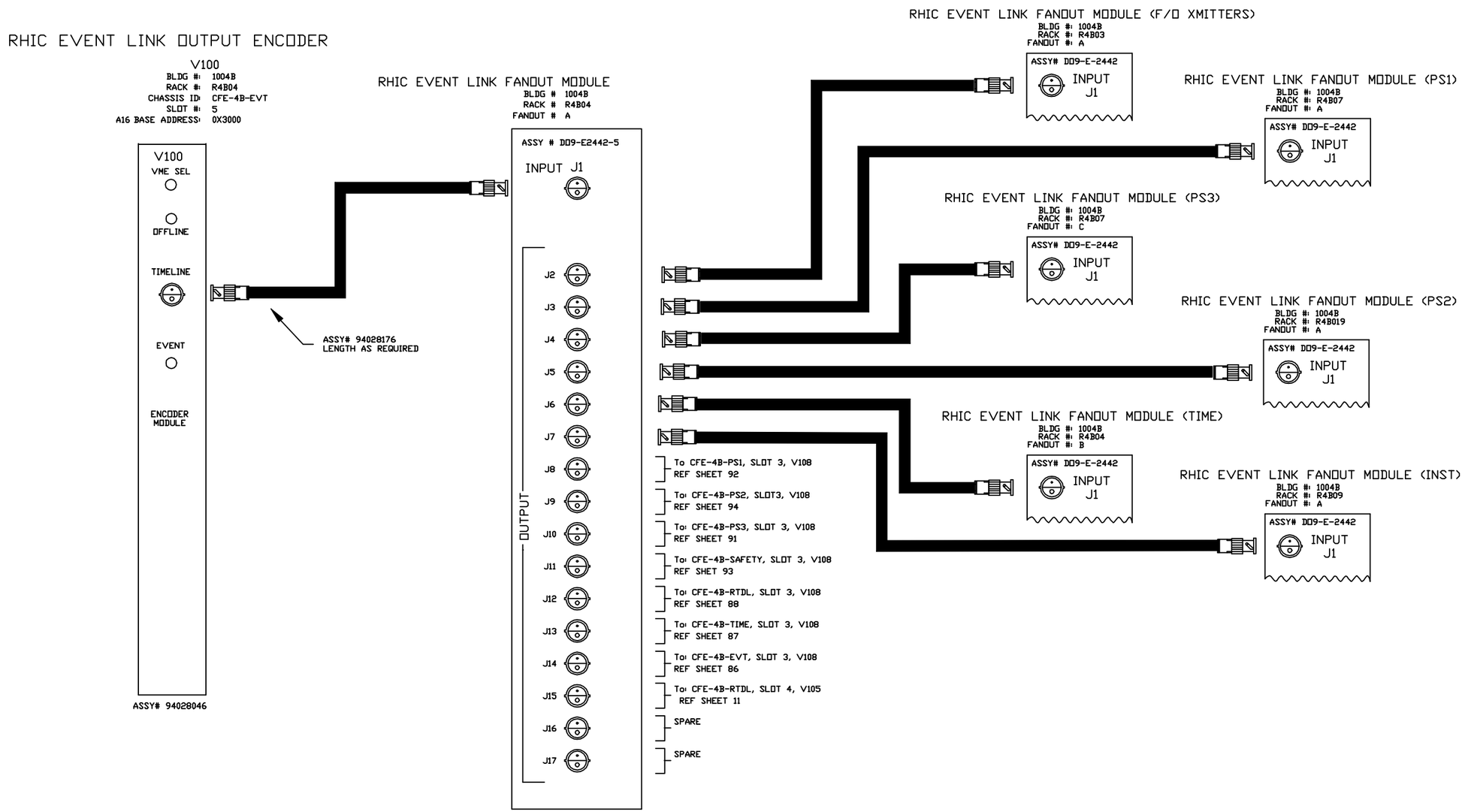

-3	-2	-1	REF DESIGNATOR	ITEM NO.	DESCRIPTION	MAT'L DWG NO./BNL NO.
QTY REQD						

INTERPRET IN GENERAL ACCORDANCE WITH ASME Y14.24M-1989

UNLESS OTHERWISE SPECIFIED DIMENSIONS ARE IN INCHES

DECIMAL TOLERANCES
.X ±.030
.XX ±.015
.XXX ±.005
ANGULAR TOLERANCE
± .5°

NA FINISH — BREAK SHARP EDGES — MAX. XX MIN. XX

OUTSTANDING ECN

Q.A. CATEGORY A-3		DATE
DRAWN BY	Phil Pape	11/21/97
CHECKED BY		
DESIGN APPROVAL		
ENGINEER APPROVAL	R. MICHNOFF	11/21/97
SUPVR. APPROVAL		

NEXT ASSEMBLY

BROOKHAVEN NATIONAL LABORATORY
UPTON, N.Y. 11973

RHIC CONTROLS WIRING DIAGRAM
SERVICE BLDG 1004B
RHIC EVENT LINK

SIZE D — DRAWING NUMBER 94028529 — REV. A

MATERIAL: ——— SCALE: NA WEIGHT: – SHEET 6 / 101

*AUTOCAD

Controls, bnl 5/4/2004 10:48 AM 8529_07.dwg

REV.	ZONE	ECN NO.	DATE	BY	CKR	APP.

RHIC EVENT LINK FANOUT MODULE

BLDG # 1004B
RACK # R4B03
FANOUT # A

FROM SHEET 06
ASSY # DD9-E2442-5

OUTPUT

J2	TO F/O CHASSIS B, SLOT 9, CH1 FEED TO 911 RK 5035
J3	TO CFE-4B-Q1, V108 RACK BY VALVE BOX
J4	TO CFE-4B-Q2, V108 RACK BY VALVE BOX
J5	TO CFE-4B-Q1, V102 RACK BY VALVE BOX
J6	TO CFE-4B-Q2, V102 RACK BY VALVE BOX
J7	TO FANOUT ?
J8	TO FANOUT ?
J9	TO FANOUT ?
J10	TO FANOUT ?
J11	SPARE
J12	To F/O CHASSIS A, SLOT 3, CHAN 2 1012B
J13	To F/O CHASSIS A, SLOT 3, CHAN 1 1010B
J14	To F/O CHASSIS A, SLOT 2, CHAN 2 1008B
J15	To F/O CHASSIS A, SLOT 2, CHAN 1 1006B
J16	To F/O CHASSIS A, SLOT 1, CHAN 2 1004B
J17	To F/O CHASSIS A, SLOT 1, CHAN 1 1002B

RHIC EVENT LINK FANOUT MODULE

BLDG # 1004B
RACK # R4B07
FANOUT # A

FROM SHEET 06
ASSY # DD9-E2442-5

OUTPUT

J2	SPARE
J3	SPARE
J4	SPARE
J5	SPARE
J6	SPARE
J7	SPARE
J8	To CFE-4B-PS1, SLOT 15, T215 REF SHEET 60
J9	To CFE-4B-PS1, SLOT 14, T215 REF SHEET 59
J10	To CFE-4B-PS1, SLOT 13, T215 REF SHEET 58
J11	To CFE-4B-PS1, SLOT 12, T215 REF SHEET 57
J12	To CFE-4B-PS1, SLOT 11, T215 REF SHEET 56
J13	To CFE-4B-PS1, SLOT 10, T215 REF SHEET 55
J14	To CFE-4B-PS1, SLOT 9, T215 REF SHEET 54
J15	To CFE-4B-PS1, SLOT 8, T215 REF SHEET 53
J16	SPARE
J17	To CFE-4B-PS1, SLOT 4, V113 REF SHEET 52

RHIC EVENT LINK FANOUT MODULE

BLDG # 1004B
RACK # R4B07
FANOUT # C

FROM SHEET 06
ASSY # DD9-E2442-5

OUTPUT

J2	SPARE
J3	SPARE
J4	SPARE
J5	SPARE
J6	SPARE
J7	SPARE
J8	SPARE
J9	SPARE
J10	SPARE
J11	SPARE
J12	To CFE-4B-PS5, SLOT 10, T215 REF SHEET 124
J13	To CFE-4B-PS5, SLOT 9, T215 REF SHEET 123
J14	To CFE-4B-PS5, SLOT 8, T215 REF SHEET 122
J15	To CFE-4B-PS5, SLOT 7, T215 REF SHEET 121
J16	To CFE-4B-PS5, SLOT 6, T215 REF SHEET 120
J17	To CFE-4B-PS5, SLOT 4, V113 REF SHEET 52

RHIC EVENT LINK FANOUT MODULE

BLDG # 1004B
RACK # R4B19
FANOUT # A

FROM SHEET 06
ASSY # DD9-E2442-5

OUTPUT

J2	SPARE
J3	SPARE
J4	SPARE
J5	SPARE
J6	SPARE
J7	SPARE
J8	To CFE-4B-PS2, SLOT 15, T215 REF SHEET 74
J9	To CFE-4B-PS2, SLOT 14, T215 REF SHEET 73
J10	To CFE-4B-PS2, SLOT 13, T215 REF SHEET 72
J11	To CFE-4B-PS2, SLOT 12, T215 REF SHEET 71
J12	To CFE-4B-PS2, SLOT 11, T215 REF SHEET 70
J13	To CFE-4B-PS2, SLOT 10, T215 REF SHEET 69
J14	To CFE-4B-PS2, SLOT 9, T215 REF SHEET 68
J15	To CFE-4B-PS2, SLOT 8, T215 REF SHEET 67
J16	SPARE
J17	To CFE-4B-PS2, SLOT 4, V113 REF SHEET 66

RHIC EVENT LINK FANOUT MODULE

BLDG # 1004B
RACK # R4B19
FANOUT # C

FROM SHEET 06
ASSY # DD9-E2442-5

OUTPUT

J2	SPARE
J3	SPARE
J4	SPARE
J5	SPARE
J6	SPARE
J7	SPARE
J8	SPARE
J9	SPARE
J10	SPARE
J11	SPARE
J12	To CFE-4B-PS6, SLOT 10, T215 REF SHEET 144
J13	To CFE-4B-PS6, SLOT 9, T215 REF SHEET 143
J14	To CFE-4B-PS6, SLOT 8, T215 REF SHEET 142
J15	To CFE-4B-PS6, SLOT 7, T215 REF SHEET 141
J16	To CFE-4B-PS6, SLOT 6, T215 REF SHEET 140
J17	To CFE-4B-PS6, SLOT 4, V113 REF SHEET 66

-3	-2	-1	REF DESIGNATOR	ITEM NO.	DESCRIPTION	MAT'L DWG NO./DWG NO.
QTY REQD						

INTERPRET IN GENERAL ACCORDANCE WITH ASME Y14.24M-1989

UNLESS OTHERWISE SPECIFIED DIMENSIONS ARE IN INCHES

DECIMAL TOLERANCES
.X ±.030
.XX ±.015
.XXX ±.005
ANGULAR TOLERANCE
± .5°

FINISH: NA

BREAK SHARP EDGES
MAX. XX MIN. XX

OUTSTANDING ECN

NEXT ASSEMBLY

Q.A. CATEGORY A-3

		DATE
DRAWN BY	Phil Pape	11/21/97
CHECKED BY		
DESIGN APPROVAL		
ENGINEER APPROVAL	R. MICHNOFF	11/21/97
SUPVR. APPROVAL		

BROOKHAVEN NATIONAL LABORATORY
UPTON, N.Y. 11973

RHIC CONTROLS WIRING DIAGRAM
SERVICE BLDG 1004B
RHIC EVENT LINK

SIZE D
DRAWING NUMBER 94028529
REV. A

MATERIAL: ——— SCALE: NA WEIGHT: — SHEET 7

*AUTOCAD

Controls, C-AD 4/23/2004 3:38 PM 8529_08.dwg

REV.	ZONE	ECN NO.	DATE	BY	CKR	APP.

RHIC EVENT LINK FANOUT MODULE

BLDG # 1004B
RACK # R4B07
FANOUT # C

FROM SHEET 06
ASSY # DD9-E2442-5

OUTPUT

J2	TO CFE-4B-PS5, SLOT 20, V102 REF SHEET 112
J3	SPARE
J4	SPARE
J5	SPARE
J6	SPARE
J7	SPARE
J8	SPARE
J9	SPARE
J10	SPARE
J11	TO CFE-4B-PS5, SLOT 10, T215 REF SHEET 124
J12	TO CFE-4B-PS5, SLOT 9, T215 REF SHEET 123
J13	TO CFE-4B-PS5, SLOT 8, T215 REF SHEET 122
J14	TO CFE-4B-PS5, SLOT 7, T215 REF SHEET 121
J15	TO CFE-4B-PS6, SLOT 6, T215 REF SHEET 120
J16	SPARE
J17	SPARE

RHIC EVENT LINK FANOUT MODULE

BLDG # 1004B
RACK # R4B04
FANOUT # B

FROM SHEET 06
ASSY # DD9-E2442-5

OUTPUT

J2	TO CFE-4B-TIME, SLOT 21, V120 REF SHEET 84
J3	TO CFE-4B-TIME, SLOT 19, V120 REF SHEET 84
J4	SPARE
J5	TO CFE-4B-TIME, SLOT 13, V102 REF SHEET 96
J6	TO CFE-4B-TIME, SLOT 12, V102 REF SHEET 96
J7	TO CFE-4B-TIME, SLOT 15, V102 REF SHEET 97
J8	
J9	
J10	
J11	
J12	
J13	
J14	
J15	
J16	
J17	

RHIC EVENT LINK FANOUT MODULE

BLDG # 1004B
RACK # R4B09
FANOUT # A

FROM SHEET 06
ASSY # DD9-E2442-5

OUTPUT

J2	CFE-4B-BLM1, SLOT 3, V108
J3	CFE-4B-BLM1, SLOT 6, V113
J4	CFE-4B-BLM2, SLOT 3, V108
J5	CFE-4B-BLM2, SLOT 6, V113
J6	CFE-4B-BLM1, SLOT 13, V118
J7	CFE-4B-BLM2, SLOT 13, V118
J8	CFE-4B-BPM1, SLOT 3, V108
J9	TO CFE-4B-PS4, SLOT 3, V108 REF SHEET 110
J10	TO QUENCH DETECT CHASSIS RACK R4B24
J11	TO QUENCH DETECT CHASSIS RACK R4B24
J12	
J13	
J14	
J15	
J16	
J17	

RHIC EVENT LINK FANOUT MODULE

BLDG # 1004B
RACK # R4B06
FANOUT # A

FROM SHEET 06
ASSY # DD9-E2442-5

OUTPUT

J2	SPARE
J3	SPARE
J4	TO CFE-4B-PS3, SLOT 17, T215 REF SHEET 109
J5	TO CFE-4B-PS3, SLOT 16, T215 REF SHEET 109
J6	TO CFE-4B-PS3, SLOT 15, T215 REF SHEET 108
J7	TO CFE-4B-PS3, SLOT 14, T215 REF SHEET 108
J8	TO CFE-4B-PS3, SLOT 13, T215 REF SHEET 107
J9	TO CFE-4B-PS3, SLOT 12, T215 REF SHEET 107
J10	TO CFE-4B-PS3, SLOT 11, T215 REF SHEET 105
J11	TO CFE-4B-PS3, SLOT 10, T215 REF SHEET 105
J12	TO CFE-4B-PS3, SLOT 9, T215 REF SHEET 104
J13	TO CFE-4B-PS3, SLOT 8, T215 REF SHEET 104
J14	TO CFE-4B-PS3, SLOT 7, T215 REF SHEET 103
J15	TO CFE-4B-PS3, SLOT 6, T215 REF SHEET 103
J16	TO CFE-4B-PS3, SLOT 5, T215 REF SHEET 102
J17	TO CFE-4B-PS3, SLOT 4, T215 REF SHEET 102

-3	-2	-1	REF DESIGNATOR	ITEM NO.	DESCRIPTION	MAT'L DWG NO./PIL NO.
QTY REQD						

INTERPRET IN GENERAL ACCORDANCE WITH ASME Y14.24M-1989

UNLESS OTHERWISE SPECIFIED DIMENSIONS ARE IN INCHES
DECIMAL TOLERANCES
.X ±.030
.XX ±.015
.XXX ±.005
ANGULAR TOLERANCE ± .5°

NA FINISH
BREAK SHARP EDGES MAX. XX MIN. XX

OUTSTANDING ECN

Q.A. CATEGORY A-3		DATE
DRAWN BY	Phil Pape	11/21/97
CHECKED BY		
DESIGN APPROVAL		
ENGINEER APPROVAL	R. MICHNOFF	11/21/97
SUPVR. APPROVAL		

NEXT ASSEMBLY

BROOKHAVEN NATIONAL LABORATORY
UPTON, N.Y. 11973

RHIC CONTROLS WIRING DIAGRAM
SERVICE BLDG 1004B
RHIC EVENT LINK

SIZE D
DRAWING NUMBER 94028529
REV. A

MATERIAL: ——— SCALE: NA WEIGHT: – SHEET 8 / 109

*AUTOCAD

ACS, BNL 10/16/98 1:39 PM 8529_09.dwg

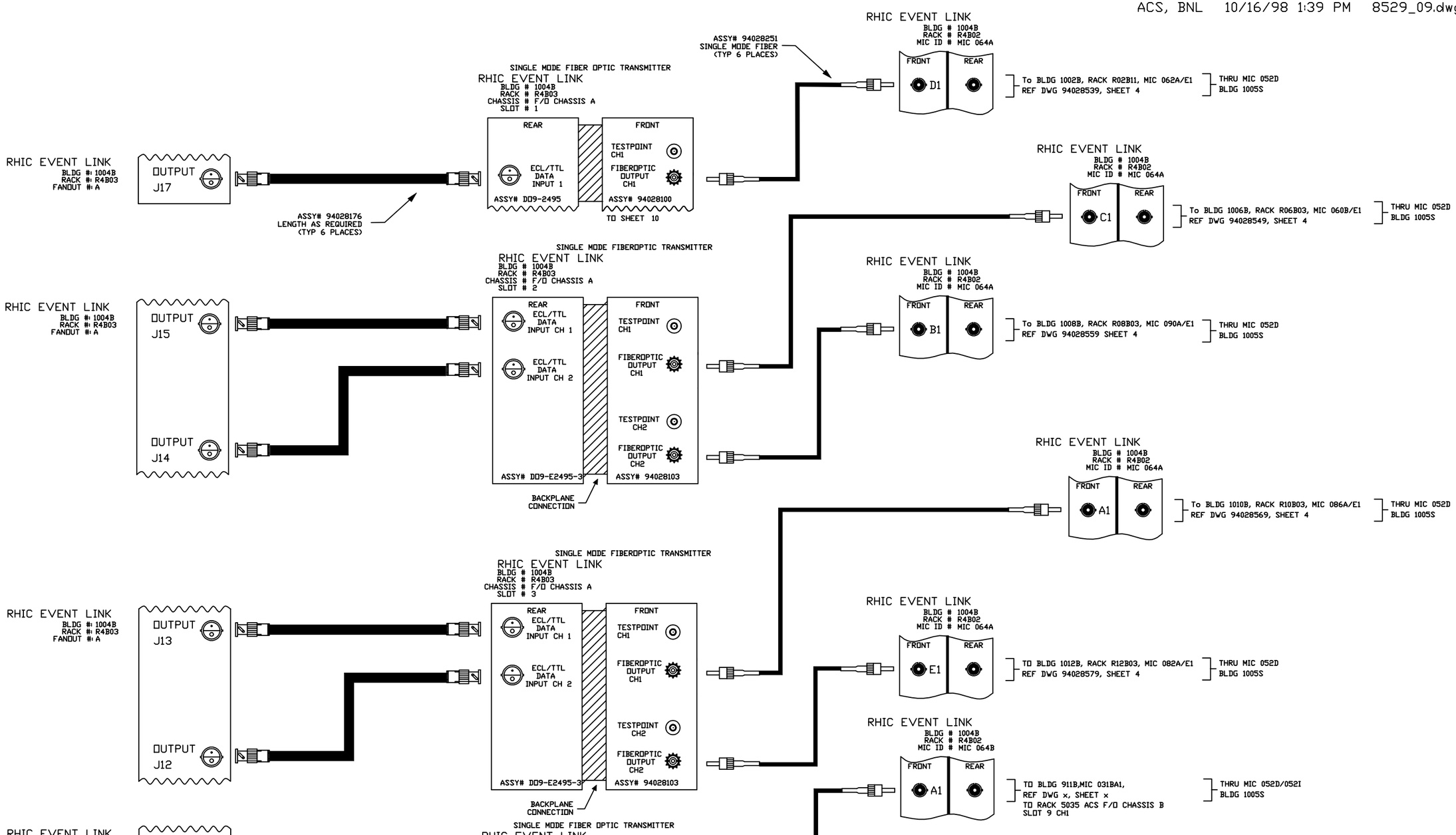

REV.	ZONE	ECN NO.	DATE	BY	CKR	APP.

-3	-2	-1	REF DESIGNATOR	ITEM NO.	DESCRIPTION	MAT'L. DWG NO.,BNL NO.
QTY REQD						

INTERPRET IN GENERAL ACCORDANCE WITH ASME Y14.24M-1989

UNLESS OTHERWISE SPECIFIED DIMENSIONS ARE IN INCHES

DECIMAL TOLERANCES
.X ±.030
.XX ±.015
.XXX ±.005
ANGULAR TOLERANCE ± .5°

NA FINISH

BREAK SHARP EDGES MAX. XX MIN. XX

OUTSTANDING ECN

Q.A. CATEGORY A-3

		DATE
DRAWN BY	Phil Pape	11/25/97
CHECKED BY		
DESIGN APPROVAL		
ENGINEER APPROVAL	R. MICHNOFF	11/25/97
SUPVR. APPROVAL		

NEXT ASSEMBLY

BROOKHAVEN NATIONAL LABORATORY
UPTON, N.Y. 11973

RHIC CONTROLS WIRING DIAGRAM
SERVICE BLDG 1004B
RHIC EVENT LINK

SIZE D | DRAWING NUMBER 94028529 | REV. A

MATERIAL: ——— SCALE: NA WEIGHT: – SHEET 9 / 101

*AUTOCAD

REV.	ZONE	ECN NO.	DATE	BY	CKR	APP.

ACS, BNL 1/28/00 1:54 PM 8529_10.dwg

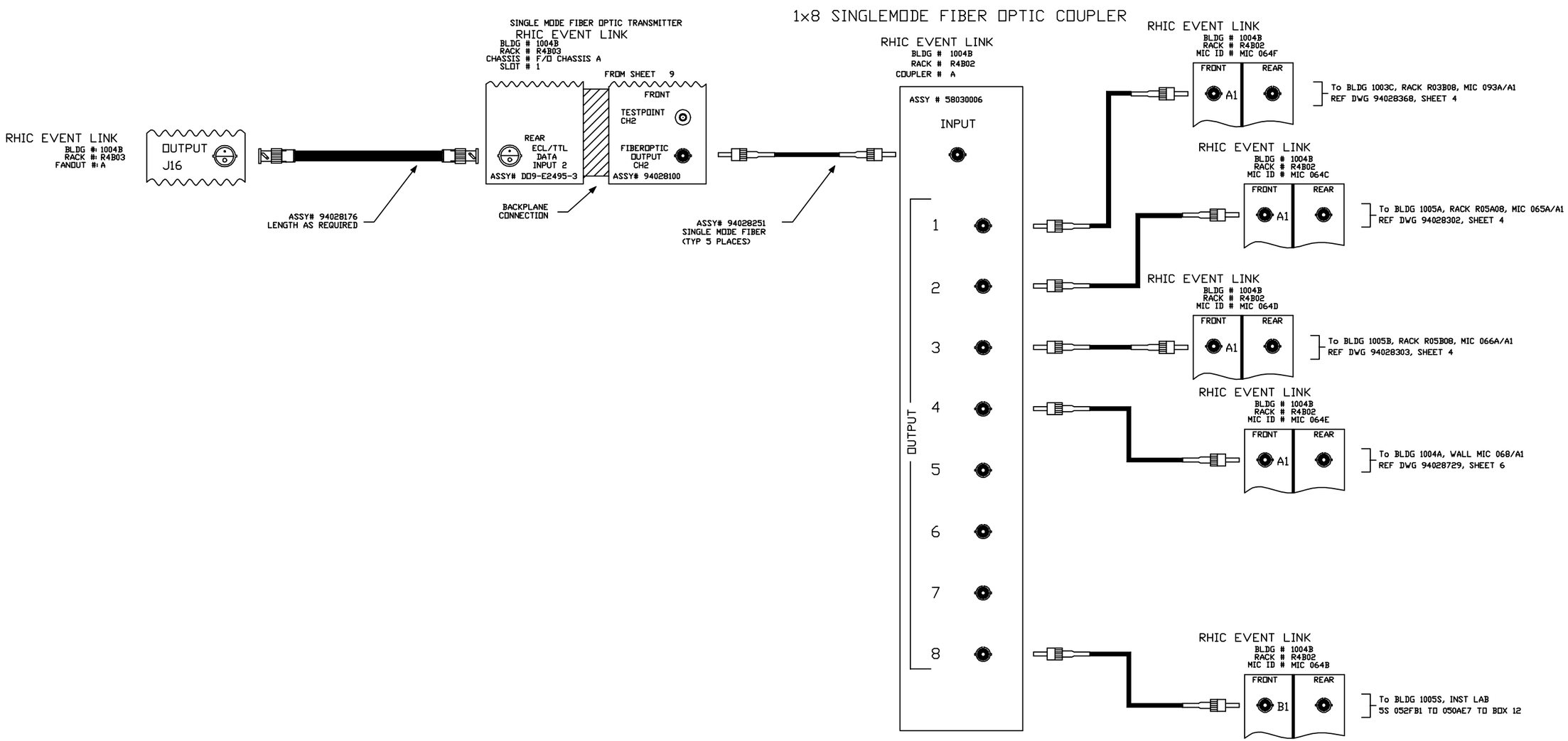

-3	-2	-1	REF DESIGNATOR	ITEM NO.	DESCRIPTION	MAT'L DWG NO./BNL NO.
QTY REQD						

INTERPRET IN GENERAL ACCORDANCE WITH ASME Y14.24M-1989

UNLESS OTHERWISE SPECIFIED DIMENSIONS ARE IN INCHES

DECIMAL TOLERANCES
.X ±.030
.XX ±.015
.XXX ±.005
ANGULAR TOLERANCE
± .5°

NA FINISH — BREAK SHARP EDGES — MAX. XX MIN. XX

OUTSTANDING ECN

Q.A. CATEGORY A-3		DATE
DRAWN BY	Phil Pape	11/26/97
CHECKED BY		
DESIGN APPROVAL		
ENGINEER APPROVAL	R. MICHNOFF	11/26/97
SUPVR. APPROVAL		

NEXT ASSEMBLY

BROOKHAVEN NATIONAL LABORATORY
UPTON, N.Y. 11973

RHIC CONTROLS WIRING DIAGRAM
SERVICE BLDG 1004B
RHIC EVENT LINK

SIZE D — DRAWING NUMBER 94028529 — REV. A

MATERIAL: ——— SCALE: NA WEIGHT: – SHEET 10 / 101

1 *AUTOCAD

ACS, BNL 1/28/00 1:57 PM 8529_11.dwg

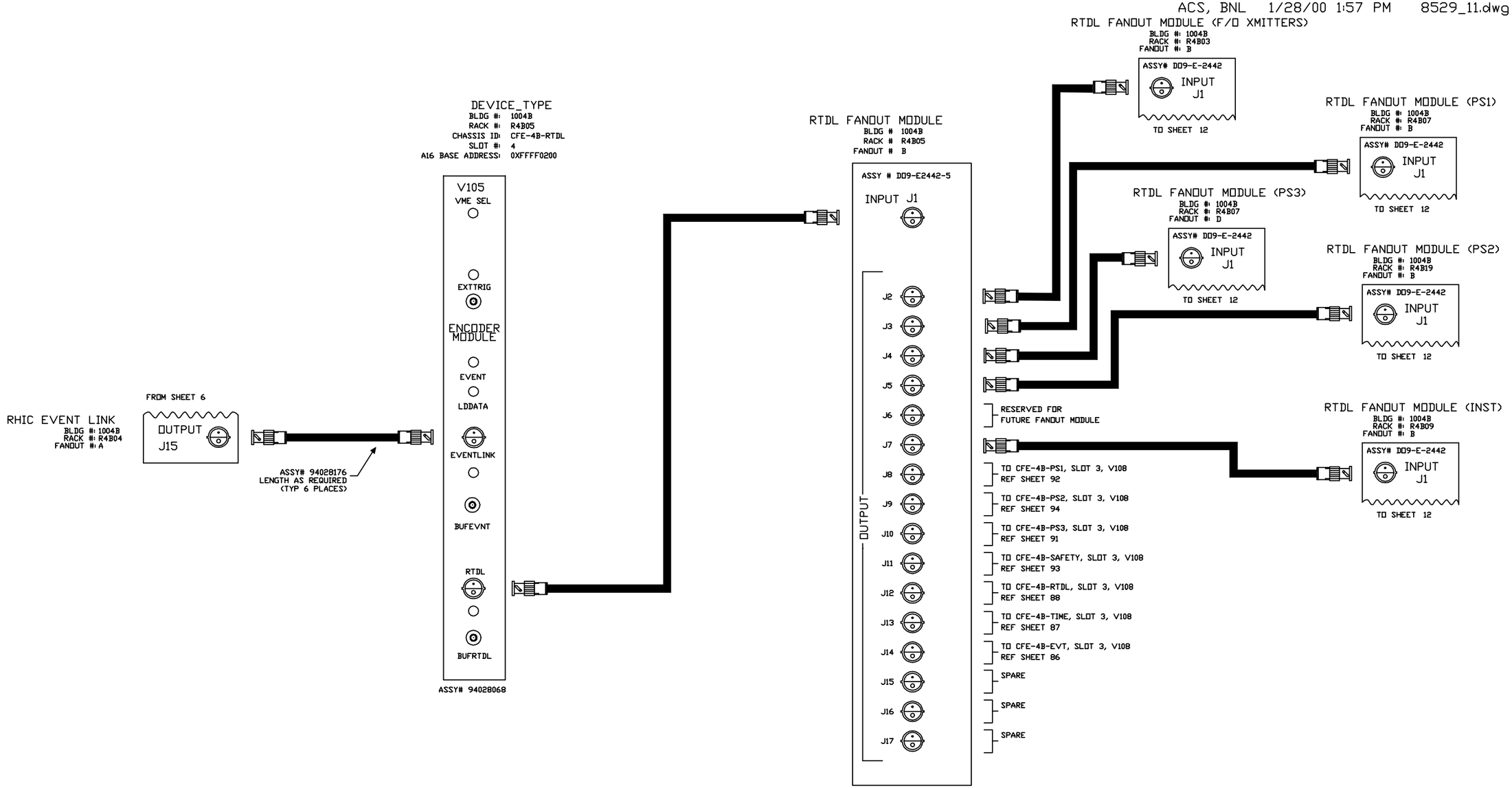

-3	-2	-1	REF DESIGNATOR	ITEM NO.	DESCRIPTION	MAT'L DWG NO./BNL NO.
QTY REQD						

INTERPRET IN GENERAL ACCORDANCE WITH ASME Y14.24M-1989

UNLESS OTHERWISE SPECIFIED DIMENSIONS ARE IN INCHES

DECIMAL TOLERANCES
.X ±.030
.XX ±.015
.XXX ±.005
ANGULAR TOLERANCE
± .5°

NA FINISH

BREAK SHARP EDGES
MAX. XX MIN. XX

OUTSTANDING ECN

Q.A. CATEGORY A-3		DATE
DRAWN BY	Phil Pape	11/25/97
CHECKED BY		
DESIGN APPROVAL		
ENGINEER APPROVAL	R. MICHNOFF	11/26/97
SUPVR. APPROVAL		

NEXT ASSEMBLY

BROOKHAVEN NATIONAL LABORATORY
UPTON, N.Y. 11973

RHIC CONTROLS WIRING DIAGRAM

SERVICE BLDG 1004B

REAL TIME DATA LINK

SIZE D | DRAWING NUMBER 94028529 | REV. A

MATERIAL: ——— SCALE: NA WEIGHT: – SHEET 11 / 101

*AUTOCAD

Controls, bnl 5/4/2004 10:50 AM 8529_12.dwg

REV.	ZONE	ECN NO.	DATE	BY	CKR	APP.

RTDL FANOUT MODULE
BLDG # 1004B
RACK # R4B03
FANOUT # B

FROM SHEET 11
ASSY # D09-E2442-5

OUTPUT

J2	TO F/O CHASSIS B, SLOT 9, CHAN 2 FEED TO 911B RACK 5035
J3	TO CFE-4B-Q1, SLOT 3, V108 RACK BY VALVE BOX
J4	TO CFE-4B-Q2, SLOT 3, V108 RACK BY VALVE BOX
J5	TO ???
J6	TO ???
J7	SPARE
J8	SPARE
J9	TO ???
J10	TO ???
J11	SPARE
J12	To F/O CHASSIS A, SLOT 6, CHAN 2 BLDG 1012B
J13	To F/O CHASSIS A, SLOT 6, CHAN 1 BLDG 1010B
J14	To F/O CHASSIS A, SLOT 5, CHAN 2 BLDG 1008B
J15	To F/O CHASSIS A, SLOT 5, CHAN 1 BLDG 1006B
J16	To F/O CHASSIS A, SLOT 4, CHAN 2 BLDG 1004B
J17	To F/O CHASSIS A, SLOT 4, CHAN 1 BLDG 1002B

RTDL FANOUT MODULE
BLDG # 1004B
RACK # R4B07
FANOUT # B

FROM SHEET 11
ASSY # D09-E2442-5

OUTPUT

J2	SPARE
J3	SPARE
J4	SPARE
J5	SPARE
J6	SPARE
J7	SPARE
J8	TO CFE-4B-PS1, SLOT 15, T215 REF SHEET 60
J9	TO CFE-4B-PS1, SLOT 14, T215 REF SHEET 59
J10	TO CFE-4B-PS1, SLOT 13, T215 REF SHEET 58
J11	TO CFE-4B-PS1, SLOT 12, T215 REF SHEET 57
J12	TO CFE-4B-PS1, SLOT 11, T215 REF SHEET 56
J13	TO CFE-4B-PS1, SLOT 10, T215 REF SHEET 55
J14	TO CFE-4B-PS1, SLOT 9, T215 REF SHEET 54
J15	TO CFE-4B-PS1, SLOT 8, T215 REF SHEET 53
J16	SPARE
J17	SPARE

RTDL FANOUT MODULE
BLDG # 1004B
RACK # R4B07
FANOUT # D

FROM SHEET 11
ASSY # D09-E2442-5

OUTPUT

J2	SPARE
J3	SPARE
J4	SPARE
J5	SPARE
J6	SPARE
J7	SPARE
J8	SPARE
J9	SPARE
J10	SPARE
J11	SPARE
J12	TO CFE-4B-PS5, SLOT 10, T215 REF SHEET 124
J13	TO CFE-4B-PS5, SLOT 9, T215 REF SHEET 123
J14	TO CFE-4B-PS5, SLOT 8, T215 REF SHEET 122
J15	TO CFE-4B-PS5, SLOT 7, T215 REF SHEET 121
J16	TO CFE-4B-PS5, SLOT 6, T215 REF SHEET 120
J17	SPARE

RTDL FANOUT MODULE
BLDG # 1004B
RACK # R4B19
FANOUT # B

FROM SHEET 11
ASSY # D09-E2442-5

OUTPUT

J2	SPARE
J3	SPARE
J4	SPARE
J5	SPARE
J6	SPARE
J7	SPARE
J8	TO CFE-4B-PS2, SLOT 15, T215 REF SHEET 74
J9	TO CFE-4B-PS2, SLOT 14, T215 REF SHEET 73
J10	TO CFE-4B-PS2, SLOT 13, T215 REF SHEET 72
J11	TO CFE-4B-PS2, SLOT 12, T215 REF SHEET 71
J12	TO CFE-4B-PS2, SLOT 11, T215 REF SHEET 70
J13	TO CFE-4B-PS2, SLOT 10, T215 REF SHEET 69
J14	TO CFE-4B-PS2, SLOT 9, T215 REF SHEET 68
J15	TO CFE-4B-PS2, SLOT 8, T215 REF SHEET 67
J16	SPARE
J17	SPARE

RTDL FANOUT MODULE
BLDG # 1004B
RACK # R4B19
FANOUT # D

FROM SHEET 11
ASSY # D09-E2442-5

OUTPUT

J2	SPARE
J3	SPARE
J4	SPARE
J5	SPARE
J6	SPARE
J7	SPARE
J8	SPARE
J9	SPARE
J10	SPARE
J11	SPARE
J12	TO CFE-4B-PS6, SLOT 10, T215 REF SHEET 144
J13	TO CFE-4B-PS26 SLOT 9, T215 REF SHEET 143
J14	TO CFE-4B-PS6, SLOT 8, T215 REF SHEET 142
J15	TO CFE-4B-PS6, SLOT 7, T215 REF SHEET 141
J16	TO CFE-4B-PS6, SLOT 6, T215 REF SHEET 140
J17	SPARE

-3	-2	-1	REF DESIGNATOR	ITEM NO.	DESCRIPTION	MAT'L. DWG NO.,BRK. NO.
QTY REQD						

INTERPRET IN GENERAL ACCORDANCE WITH ASME Y14.24M-1989

UNLESS OTHERWISE SPECIFIED DIMENSIONS ARE IN INCHES

DECIMAL TOLERANCES
.X ±.030
.XX ±.015
.XXX ±.005
ANGULAR TOLERANCE ± .5°

OUTSTANDING ECN

NA FINISH

BREAK SHARP EDGES MAX. XX MIN. XX

Q.A. CATEGORY A-3		DATE
DRAWN BY	Phil Pape	11/26/97
CHECKED BY		
DESIGN APPROVAL		
ENGINEER APPROVAL	R. MICHNOFF	11/26/97
SUPVR. APPROVAL		

NEXT ASSEMBLY

BROOKHAVEN NATIONAL LABORATORY
UPTON, N.Y. 11973

RHIC CONTROLS WIRING DIAGRAM
SERVICE BLDG, 1004B
REAL TIME DATA LINK

SIZE D
DRAWING NUMBER 94028529
REV. A

MATERIAL: ——— SCALE: NA WEIGHT: — SHEET 12

*AUTOCAD

Controls, C-AD 4/26/2004 3:44 PM 8529_12a.dwg

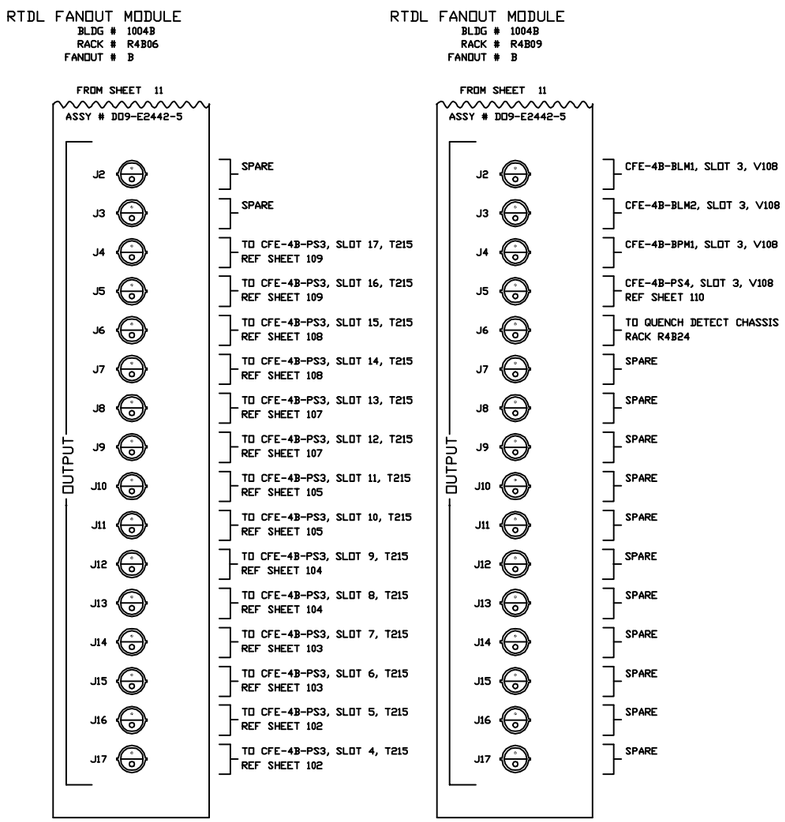

REV.	ZONE	ECN NO.	DATE	BY	CKR	APP.

-3	-2	-1	REF DESIGNATOR	ITEM NO.	DESCRIPTION	MAT'L DWG NO./PN. NO.
QTY REQD						

INTERPRET IN GENERAL ACCORDANCE WITH ASME Y14.24M-1989

UNLESS OTHERWISE SPECIFIED DIMENSIONS ARE IN INCHES

DECIMAL TOLERANCES
.X ±.030
.XX ±.015
.XXX ±.005
ANGULAR TOLERANCE
± .5°

FINISH: NA

BREAK SHARP EDGES
MAX. XX MIN. XX

OUTSTANDING ECN

NEXT ASSEMBLY

Q.A. CATEGORY A-3		DATE	
DRAWN BY	Phil Pape	11/26/97	
CHECKED BY			
DESIGN APPROVAL			
ENGINEER APPROVAL	R. MICHNOFF	11/26/97	
SUPVR. APPROVAL			

BROOKHAVEN NATIONAL LABORATORY
UPTON, N.Y. 11973

RHIC CONTROLS WIRING DIAGRAM
SERVICE BLDG, 1004B
REAL TIME DATA LINK

SIZE D
DRAWING NUMBER 94028529
REV. A

MATERIAL: ——— SCALE: NA WEIGHT: – SHEET 12a

*AUTOCAD

ACS, BNL 10/16/98 1:45 PM 8529_13.dwg

REV.	ZONE	ECN NO.	DATE	BY	CKR	APP.

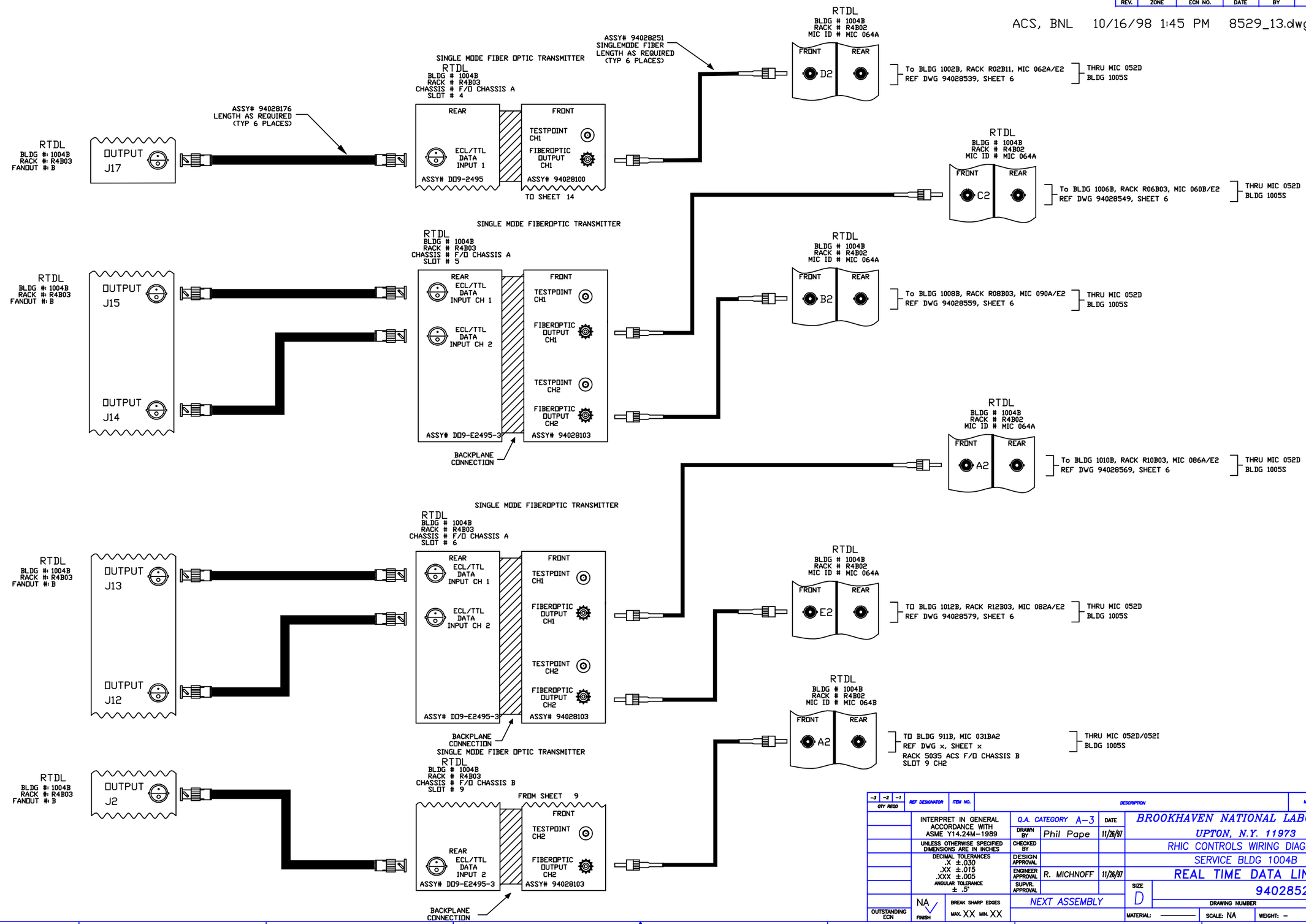

-3	-2	-1	REF DESIGNATOR	ITEM NO.	DESCRIPTION	MAT'L DWG NO./BNL NO.
QTY REQD						

INTERPRET IN GENERAL ACCORDANCE WITH ASME Y14.24M-1989	Q.A. CATEGORY A-3	DATE	BROOKHAVEN NATIONAL LABORATORY
	DRAWN BY Phil Pape	11/26/97	UPTON, N.Y. 11973
UNLESS OTHERWISE SPECIFIED DIMENSIONS ARE IN INCHES	CHECKED BY		RHIC CONTROLS WIRING DIAGRAM
DECIMAL TOLERANCES .X ±.030 .XX ±.015 .XXX ±.005 ANGULAR TOLERANCE ± .5°	DESIGN APPROVAL		SERVICE BLDG 1004B
	ENGINEER APPROVAL R. MICHNOFF	11/26/97	REAL TIME DATA LINK
	SUPVR. APPROVAL		SIZE D / DRAWING NUMBER 94028529 / REV. A
OUTSTANDING ECN / NA FINISH	BREAK SHARP EDGES MAX. XX MIN. XX	NEXT ASSEMBLY	MATERIAL: ——— SCALE: NA WEIGHT: – SHEET 13 of XX

1 *AUTOCAD

REV.	ZONE	ECN NO.	DATE	BY	CKR	APP.

ACS, BNL 8/26/99 3:31 PM 8529_14.dwg

1x8 SINGLEMODE FIBER OPTIC COUPLER

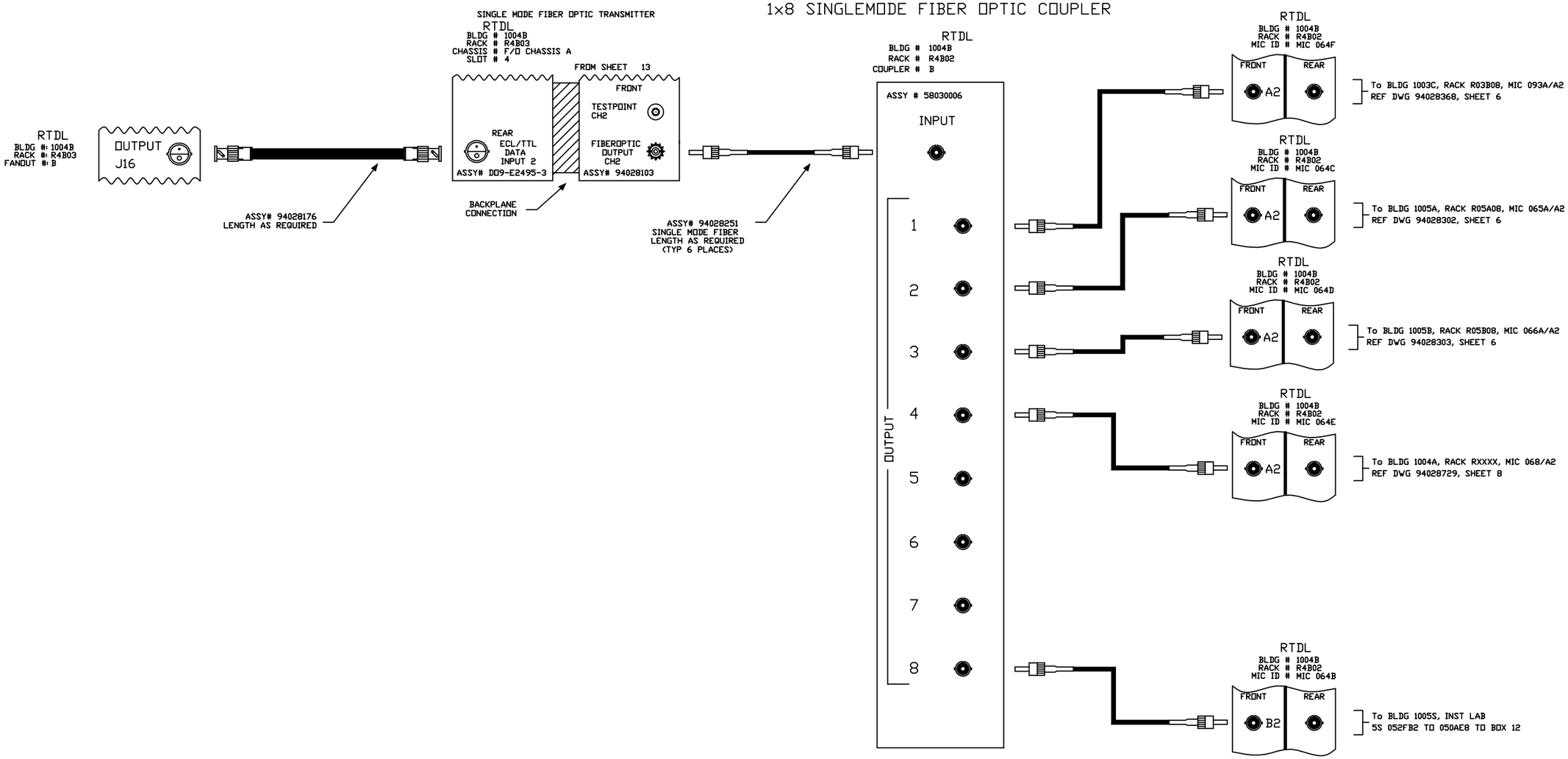

-3	-2	-1	REF DESIGNATOR	ITEM NO.	DESCRIPTION	MAT'L DWG NO./BNL NO.
QTY REQD						

INTERPRET IN GENERAL ACCORDANCE WITH ASME Y14.24M-1989

UNLESS OTHERWISE SPECIFIED DIMENSIONS ARE IN INCHES

DECIMAL TOLERANCES
.X ±.030
.XX ±.015
.XXX ±.005
ANGULAR TOLERANCE
± .5°

NA FINISH

BREAK SHARP EDGES
MAX. XX MIN. XX

OUTSTANDING ECN

Q.A. CATEGORY A-3		DATE
DRAWN BY	Phil Pape	11/26/97
CHECKED BY		
DESIGN APPROVAL		
ENGINEER APPROVAL	R. MICHNOFF	11/26/97
SUPVR. APPROVAL		

NEXT ASSEMBLY

BROOKHAVEN NATIONAL LABORATORY
UPTON, N.Y. 11973

RHIC CONTROLS WIRING DIAGRAM
SERVICE BLDG 1004B
REAL TIME DATA LINK

SIZE D
DRAWING NUMBER 94028529
REV. A

MATERIAL: ——— SCALE: NA WEIGHT: – SHEET 14 OF XX

*AUTOCAD

Controls, C-AD 4/26/2004 4:10 PM 8529_15.dwg

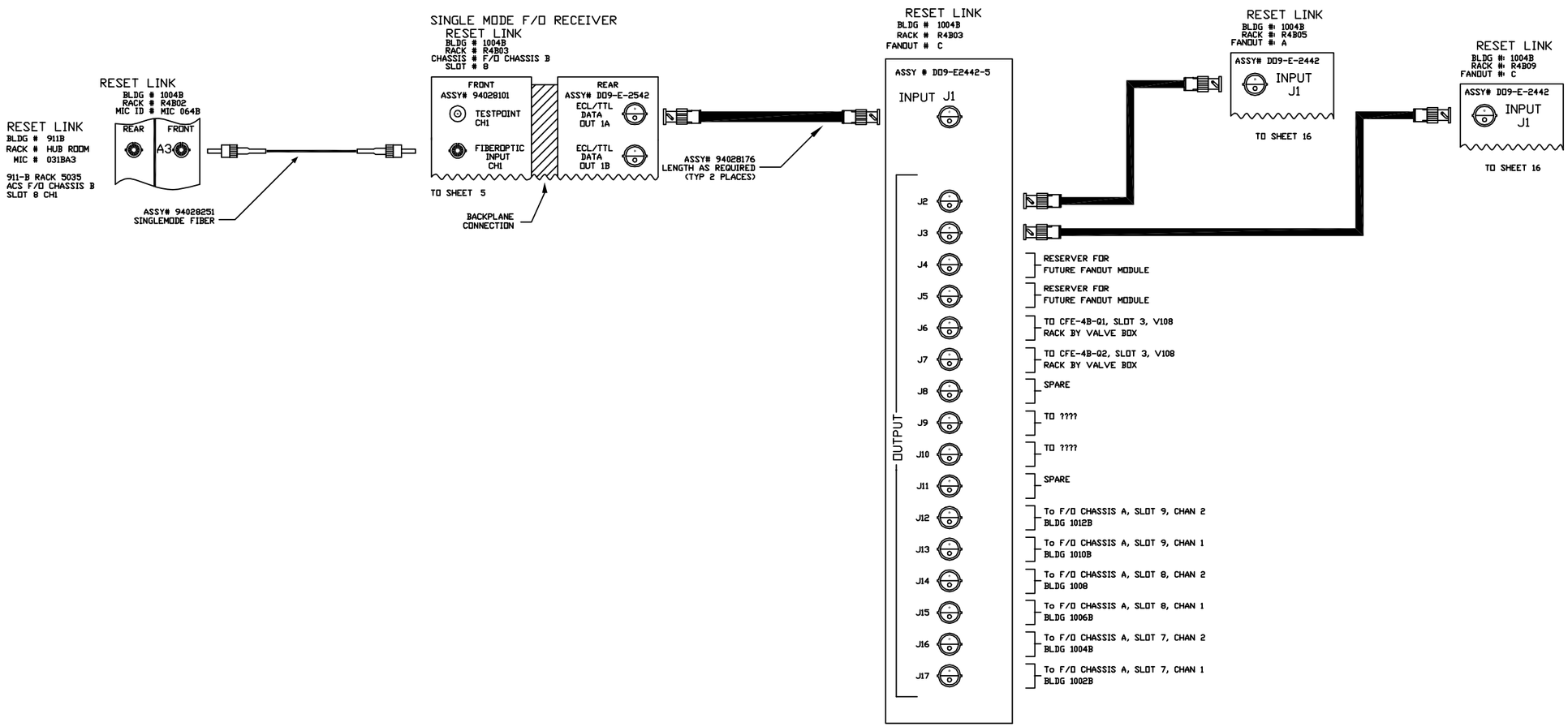

-3	-2	-1	REF DESIGNATOR	ITEM NO.	DESCRIPTION	MAT'L DWG NO.,LINE NO.
QTY REQD						

INTERPRET IN GENERAL ACCORDANCE WITH ASME Y14.24M-1989

UNLESS OTHERWISE SPECIFIED DIMENSIONS ARE IN INCHES

DECIMAL TOLERANCES
.X ±.030
.XX ±.015
.XXX ±.005
ANGULAR TOLERANCE
± .5°

OUTSTANDING ECN

FINISH NA

BREAK SHARP EDGES MAX. XX MIN. XX

Q.A. CATEGORY A-3		DATE	BROOKHAVEN NATIONAL LABORATORY UPTON, N.Y. 11973
DRAWN BY	Phil Pape	11/26/97	
CHECKED BY			RHIC CONTROLS WIRING DIAGRAM
DESIGN APPROVAL			SERVICE BLDG 1004B
ENGINEER APPROVAL	R. MICHNOFF	11/26/97	RESET LINK
SUPVR. APPROVAL			
NEXT ASSEMBLY			SIZE D — DRAWING NUMBER 94028529 — REV. A

MATERIAL: ——— SCALE: NA WEIGHT: – SHEET 15 OF XX

*AUTOCAD

REV.	ZONE	ECN NO.	DATE	BY	CKR	APP.

Controls, C-AD 4/26/2004 4:12 PM 8529_16.dwg

RESET LINK

BLDG # 1004B
RACK # R4B05
FANOUT # A

FROM SHEET 15
ASSY # DD9-E2442-5

OUTPUT

J2	SPARE
J3	SPARE
J4	SPARE
J5	SPARE
J6	SPARE
J7	SPARE
J8	To CFE-4B-PS1, SLOT 3, V108 REF SHEET 92
J9	To CFE-4B-PS2, SLOT 3, V108 REF SHEET 94
J10	To CFE-4B-PS3, SLOT 3, V108 REF SHEET 91
J11	To CFE-4B-SAFETY, SLOT 3, V108 REF SHEET 93
J12	To CFE-4B-RTDL, SLOT 3, V108 REF SHEET 88
J13	TO CFE-4B-TIME, SLOT 3, V108 REF SHEET 87
J14	TO CFE-4B-EVT, SLOT 3, V108 REF SHEET 86
J15	SPARE
J16	SPARE
J17	SPARE

RESET LINK

BLDG # 1004B
RACK # R4B09
FANOUT # C

FROM SHEET 15
ASSY # DD9-E2442-5

OUTPUT

J2	CFE-4B-BLM1, SLOT 3, V108
J3	CFE-4B-BLM2, SLOT 3, V108
J4	CFE-4B-BPM1, SLOT 3, V108
J5	CFE-4B-PS4, SLOT 3, V108 REF SHEET 110
J6	TO AC POWER RESET MODULE R4B06
J7	SPARE
J8	TO AC POWER RESET MODULE R4B09, BLM
J9	TO QUENCH DETECT CHASSIS RACK R4B24
J10	SPARE
J11	SPARE
J12	SPARE
J13	TO AC RESET R4B10
J14	TO AC RESET R4B06
J15	TO AC RESET R4B19
J16	TO AC POWER RESET MODULE R4B08
J17	TO AC POWER RESET MODULE R4B08

-3	-2	-1	REF DESIGNATOR	ITEM NO.	DESCRIPTION	MAT'L DWG NO./PNL NO.
QTY REQD						

INTERPRET IN GENERAL ACCORDANCE WITH ASME Y14.24M-1989

UNLESS OTHERWISE SPECIFIED DIMENSIONS ARE IN INCHES
DECIMAL TOLERANCES
.X ±.030
.XX ±.015
.XXX ±.005
ANGULAR TOLERANCE ± .5°

OUTSTANDING ECN

NA FINISH

BREAK SHARP EDGES MAX. XX MIN. XX

Q.A. CATEGORY A-3		DATE	
DRAWN BY	Phil Pape	11/26/97	
CHECKED BY			
DESIGN APPROVAL			
ENGINEER APPROVAL	R. MICHNOFF	11/26/97	
SUPVR. APPROVAL			

NEXT ASSEMBLY

BROOKHAVEN NATIONAL LABORATORY
UPTON, N.Y. 11973

RHIC CONTROLS WIRING DIAGRAM
SERVICE BLDG, 1004B
RESET LINK

SIZE D
DRAWING NUMBER 94028529
REV. A

MATERIAL: ——— SCALE: NA WEIGHT: – SHEET 16

*AUTOCAD

ACS, BNL 10/16/98 1:52 PM 8529_17.dwg

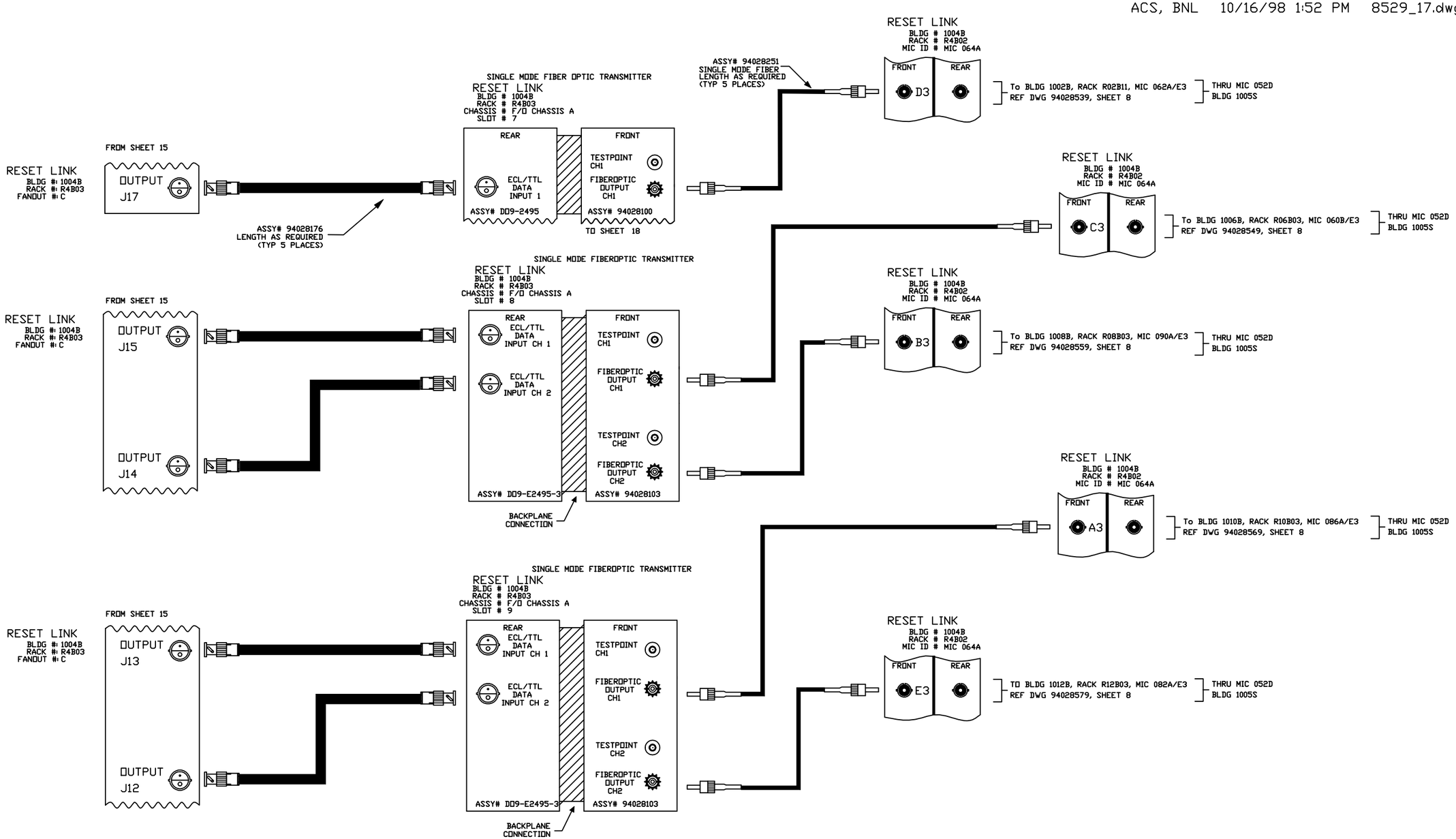

REV.	ZONE	ECN NO.	DATE	BY	CKR	APP.

-3	-2	-1	REF DESIGNATOR	ITEM NO.	DESCRIPTION	MAT'L. DWG NO.,BNL NO.
QTY REQD						

INTERPRET IN GENERAL ACCORDANCE WITH ASME Y14.24M-1989

UNLESS OTHERWISE SPECIFIED DIMENSIONS ARE IN INCHES

DECIMAL TOLERANCES
.X ±.030
.XX ±.015
.XXX ±.005
ANGULAR TOLERANCE
± .5°

NA FINISH

BREAK SHARP EDGES
MAX. XX MIN. XX

OUTSTANDING ECN

Q.A. CATEGORY A-3

		DATE
DRAWN BY	Phil Pape	11/26/97
CHECKED BY		
DESIGN APPROVAL		
ENGINEER APPROVAL	R. MICHNOFF	11/26/97
SUPVR. APPROVAL		

NEXT ASSEMBLY

BROOKHAVEN NATIONAL LABORATORY
UPTON, N.Y. 11973

RHIC CONTROLS WIRING DIAGRAM
SERVICE BLDG 1004B

RESET LINK

SIZE D | DRAWING NUMBER 94028529 | REV. A

MATERIAL: ——— SCALE: NA WEIGHT: – SHEET 17 of XX

*AUTOCAD

REV.	ZONE	ECN NO.	DATE	BY	CKR	APP.

ACS, BNL 8/26/99 3:35 PM 8529_18.dwg

1x8 SINGLEMODE FIBER OPTIC COUPLER

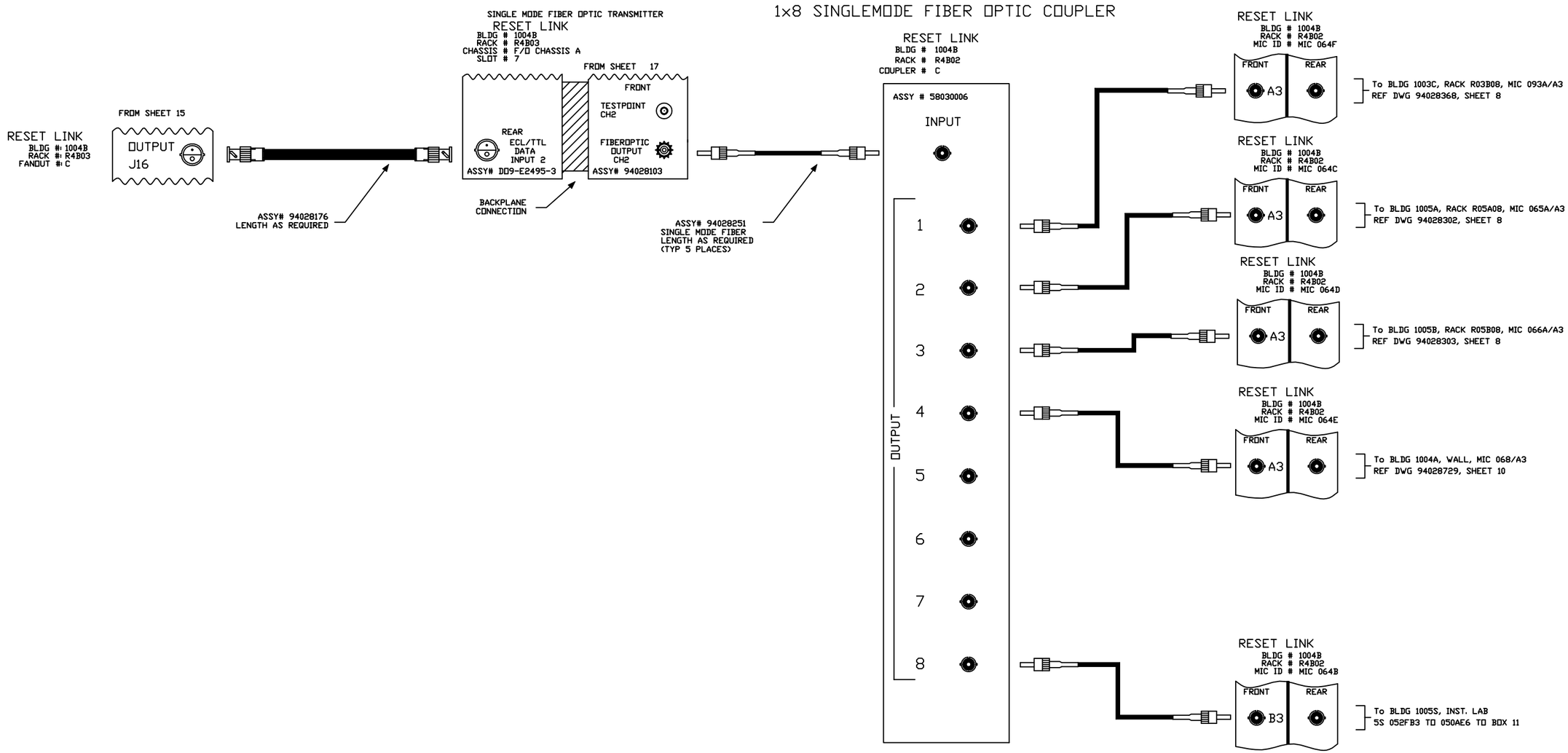

-3	-2	-1	REF DESIGNATOR	ITEM NO.	DESCRIPTION	MAT'L DWG NO./BNL NO.
QTY REQD						

INTERPRET IN GENERAL ACCORDANCE WITH ASME Y14.24M-1989

UNLESS OTHERWISE SPECIFIED DIMENSIONS ARE IN INCHES

DECIMAL TOLERANCES
.X ±.030
.XX ±.015
.XXX ±.005
ANGULAR TOLERANCE
± .5°

NA FINISH

BREAK SHARP EDGES
MAX. XX MIN. XX

OUTSTANDING ECN

Q.A. CATEGORY A-3		DATE
DRAWN BY	Phil Pape	11/26/97
CHECKED BY		
DESIGN APPROVAL		
ENGINEER APPROVAL	R. MICHNOFF	11/26/97
SUPVR. APPROVAL		

NEXT ASSEMBLY

BROOKHAVEN NATIONAL LABORATORY
UPTON, N.Y. 11973

RHIC CONTROLS WIRING DIAGRAM
SERVICE BLDG 1004B
RESET LINK

SIZE D | DRAWING NUMBER 94028529 | REV. A

MATERIAL: ——— SCALE: NA WEIGHT: – SHEET 18 OF XX

1 *AUTOCAD

ACS, BNL 8/26/99 3:43 PM 8529_19.dwg

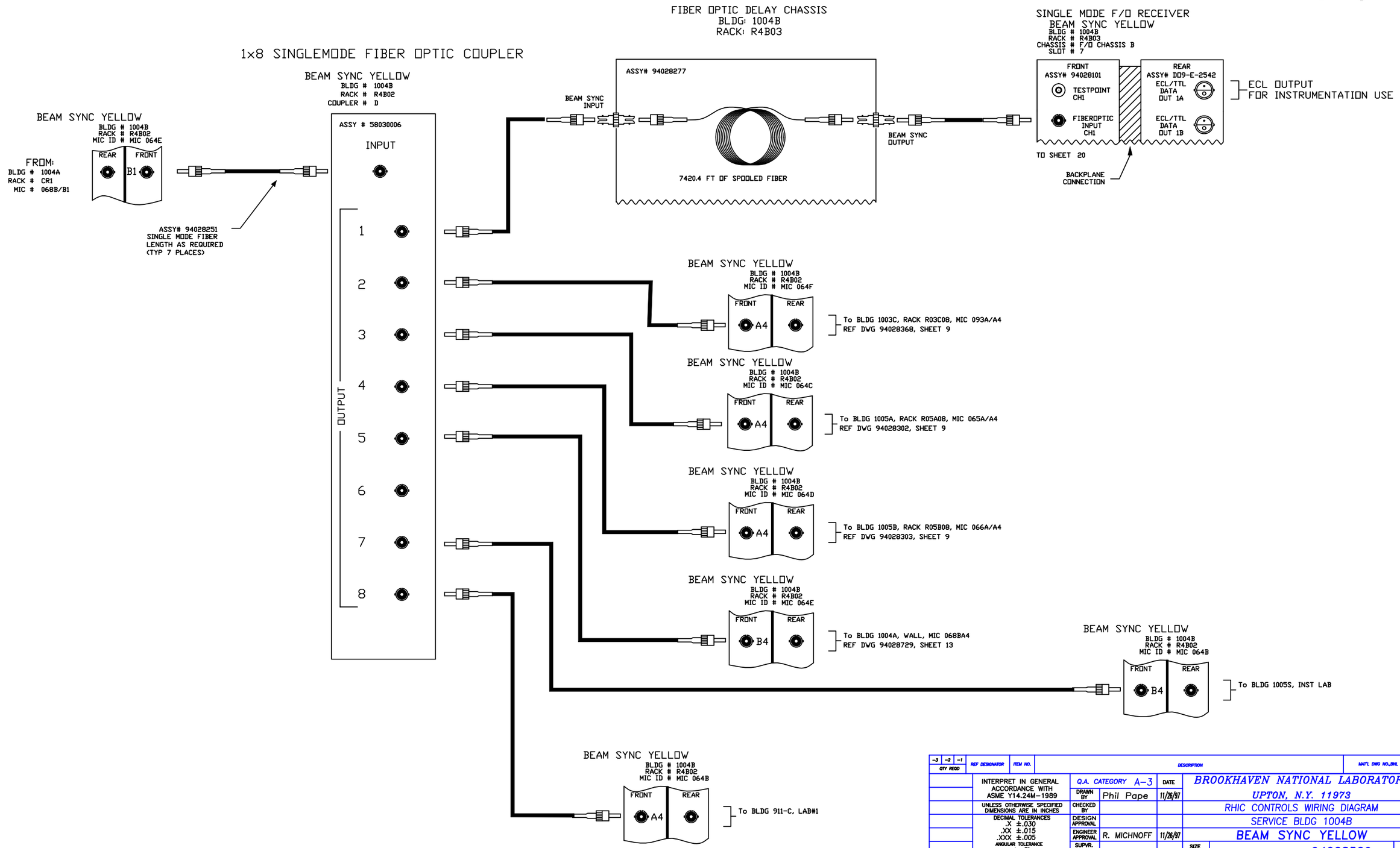

REV.	ZONE	ECN NO.	DATE	BY	CKR	APP.

-3	-2	-1	REF DESIGNATOR	ITEM NO.	DESCRIPTION	MAT'L. DWG NO.,BNL NO.
QTY REQD						

INTERPRET IN GENERAL ACCORDANCE WITH ASME Y14.24M-1989

UNLESS OTHERWISE SPECIFIED DIMENSIONS ARE IN INCHES

DECIMAL TOLERANCES
.X ±.030
.XX ±.015
.XXX ±.005
ANGULAR TOLERANCE ± .5°

OUTSTANDING ECN

NA FINISH

BREAK SHARP EDGES
MAX. XX MIN. XX

Q.A. CATEGORY A-3		DATE
DRAWN BY	Phil Pape	11/26/97
CHECKED BY		
DESIGN APPROVAL		
ENGINEER APPROVAL	R. MICHNOFF	11/26/97
SUPVR. APPROVAL		

NEXT ASSEMBLY

BROOKHAVEN NATIONAL LABORATORY
UPTON, N.Y. 11973

RHIC CONTROLS WIRING DIAGRAM
SERVICE BLDG 1004B
BEAM SYNC YELLOW

SIZE D
94028529
DRAWING NUMBER
REV. A

MATERIAL: ——— SCALE: NA WEIGHT: — SHEET 19 OF XX

*AUTOCAD

ACS, BNL 8/26/99 3:46 PM 8529_20.dwg

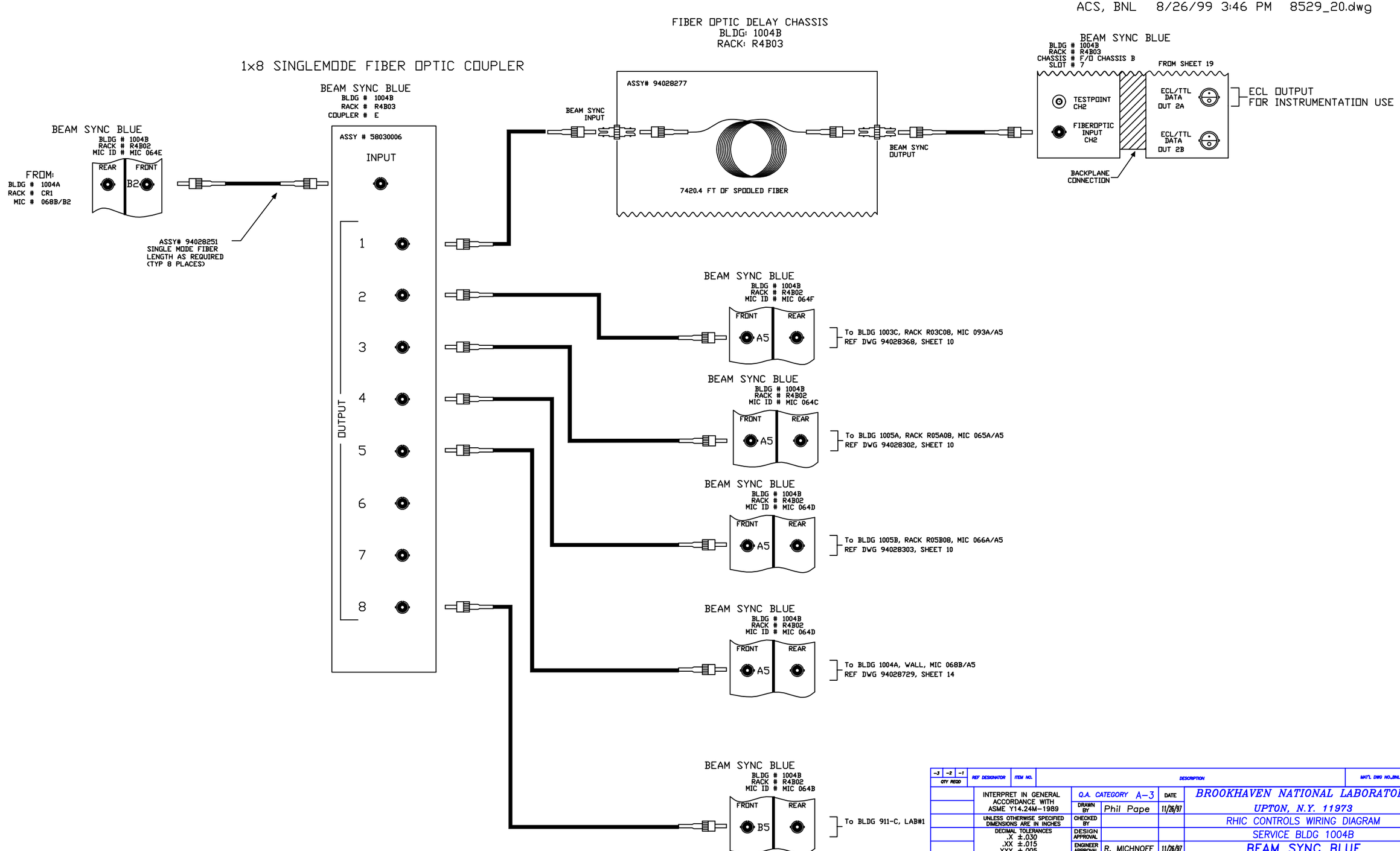

REV.	ZONE	ECN NO.	DATE	BY	CKR	APP.

-3	-2	-1	REF DESIGNATOR	ITEM NO.	DESCRIPTION	MAT'L DWG NO./INL NO.
QTY REQD						

INTERPRET IN GENERAL ACCORDANCE WITH ASME Y14.24M-1989

UNLESS OTHERWISE SPECIFIED DIMENSIONS ARE IN INCHES

DECIMAL TOLERANCES
.X ±.030
.XX ±.015
.XXX ±.005
ANGULAR TOLERANCE
± .5°

NA FINISH

BREAK SHARP EDGES
MAX. XX MIN. XX

OUTSTANDING ECN

Q.A. CATEGORY A-3		DATE
DRAWN BY	Phil Pape	11/26/97
CHECKED BY		
DESIGN APPROVAL		
ENGINEER APPROVAL	R. MICHNOFF	11/26/97
SUPVR. APPROVAL		

NEXT ASSEMBLY

BROOKHAVEN NATIONAL LABORATORY
UPTON, N.Y. 11973

RHIC CONTROLS WIRING DIAGRAM
SERVICE BLDG 1004B
BEAM SYNC BLUE

SIZE D | DRAWING NUMBER 94028529 | REV. A

MATERIAL: ——— SCALE: NA WEIGHT: – SHEET 20 OF XX

*AUTOCAD

REV.	ZONE	ECN NO.	DATE	BY	CKR	APP.

BNL, BNL 5/5/00 2:13 PM 8529_21.dwg

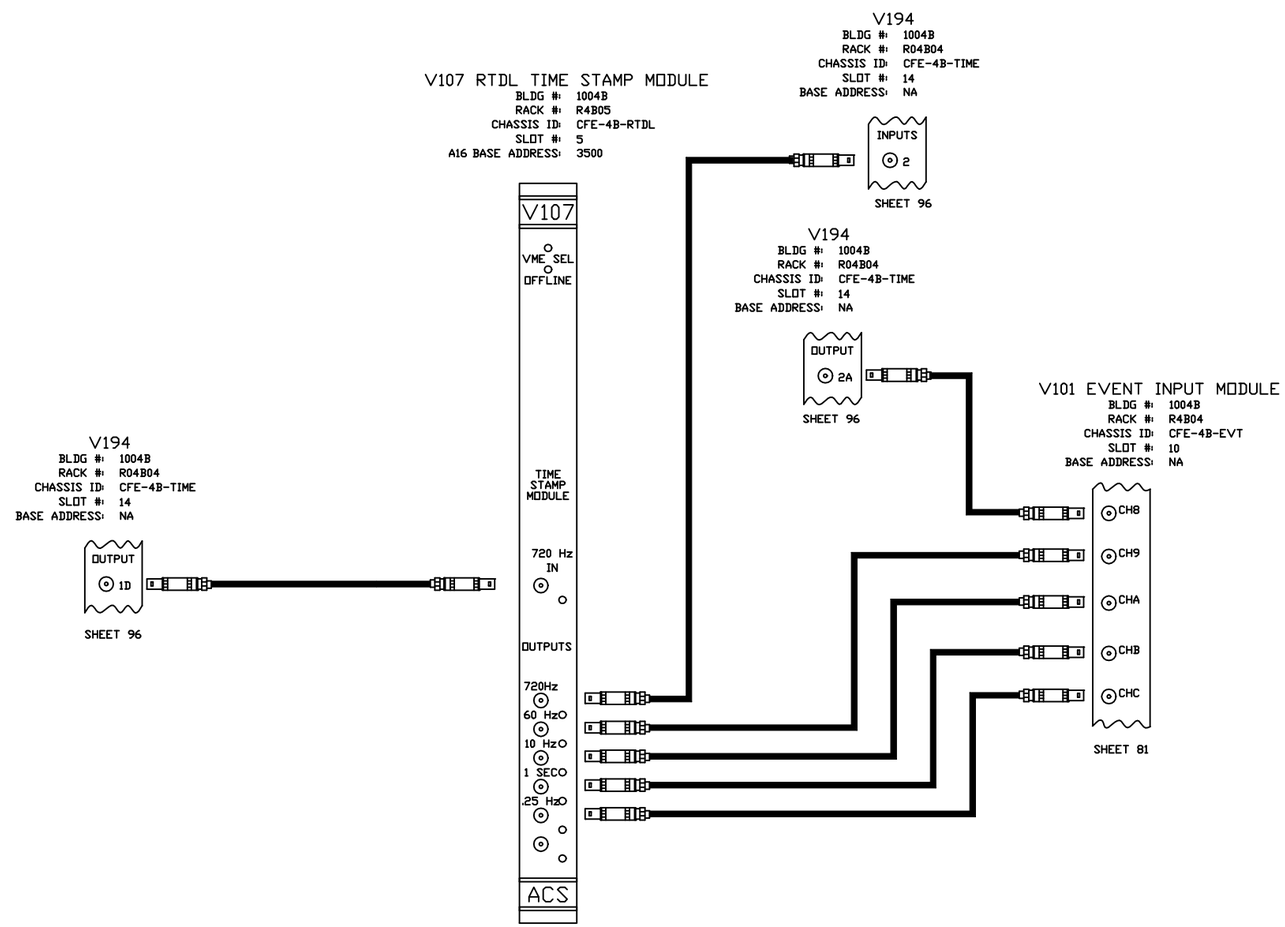

-3	-2	-1	REF DESIGNATOR	ITEM NO.	DESCRIPTION	MAT'L DWG NO.,BNL NO.
QTY REQD						

INTERPRET IN GENERAL ACCORDANCE WITH ASME Y14.24M-1989

UNLESS OTHERWISE SPECIFIED DIMENSIONS ARE IN INCHES

DECIMAL TOLERANCES
.X ±.030
.XX ±.015
.XXX ±.005
ANGULAR TOLERANCE
± .5°

NA FINISH

BREAK SHARP EDGES
MAX. XX MIN. XX

OUTSTANDING ECN

Q.A. CATEGORY A-3		DATE
DRAWN BY	Ed Koropsak	8/27/99
CHECKED BY		
DESIGN APPROVAL		
ENGINEER APPROVAL	R. MICHNOFF	8/27/99
SUPVR. APPROVAL		

NEXT ASSEMBLY

BROOKHAVEN NATIONAL LABORATORY
UPTON, N.Y. 11973

RHIC CONTROLS WIRING DIAGRAM
SERVICE BLDG 1004B
TIME STAMP MODULE

SIZE D
DRAWING NUMBER 94028529
REV. A

MATERIAL: ——— SCALE: NA WEIGHT: – SHEET 21 OF XX

*AUTOCAD

Controls, C-AD 4/27/2004 9:32 AM 8529_22.dwg

RTDL INPUT MODULE

BLDG #: 1004B
RACK #: R4B05
CHASSIS ID: CFE-4B-RTDL
SLOT #: 11
A16 BASE ADDRESS: B000

ADDRESS
E44 TO E36-OUT
E43 TO E35-IN
E42 TO E34-OUT
E41 TO E33-OUT
E40 TO E32-IN
E39 TO E31-IN
E38 TO E30-IN
E37 TO E29-IN

PARM ID
E71 TO E79-IN
E72 TO E80-IN
E73 TO E81-OUT
E74 TO E82-IN
E75 TO E83-IN
E76 TO E84-IN
E77 TO E85-IN
E78 TO E86-IN

RT-YDISET2
FROM R4B19 COUPLER B #5
REF SHEET 79
SERIAL LINK CODE 0xB0
RTDL PARM ID 0x20

E65 TO E68-OUT
E66 TO E69-OUT
E67 TO E70-OUT

RT-YQISET2
FROM R4B19 COUPLER C #4
REF SHEET 79
SERIAL LINK CODE 0xB0
RTDL PARM ID 0x21

E87 TO E90-OUT
E88 TO E91-OUT
E89 TO E92-OUT

PARM ID
E93 TO E101-IN
E94 TO E102-IN
E95 TO E103-OUT
E96 TO E104-IN
E97 TO E105-IN
E98 TO E106-IN
E99 TO E107-IN
E100 TO E108-OUT

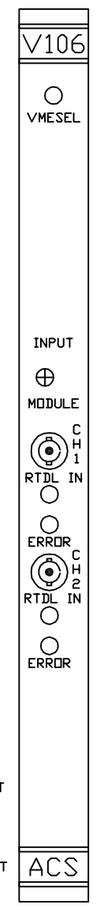

RTDL INPUT MODULE

BLDG #: 1004B
RACK #: R4B05
CHASSIS ID: CFE-4B-RTDL
SLOT #: 12
A16 BASE ADDRESS: B100

ADDRESS
E44 TO E36-OUT
E43 TO E35-IN
E42 TO E34-OUT
E41 TO E33-OUT
E40 TO E32-IN
E39 TO E31-IN
E38 TO E30-IN
E37 TO E29-OUT

PARM ID
E71 TO E79-IN
E72 TO E80-IN
E73 TO E81-IN
E74 TO E82-IN
E75 TO E83-IN
E76 TO E84-IN
E77 TO E85-IN
E78 TO E86-OUT

RT-BDISET2
FROM R4B07 COUPLER B #5
REF SHEET 65
SERIAL LINK CODE 0xB5
RTDL PARM ID 0x54

E65 TO E68-OUT
E66 TO E69-OUT
E67 TO E70-OUT

RT-BQISET2
FROM R4B07 COUPLER C #5
REF SHEET 65
SERIAL LINK CODE 0xB5
RTDL PARM ID 0x55

E87 TO E90-OUT
E88 TO E91-OUT
E89 TO E92-OUT

PARM ID
E93 TO E101-IN
E94 TO E102-IN
E95 TO E103-IN
E96 TO E104-IN
E97 TO E105-IN
E98 TO E106-IN
E99 TO E107-OUT
E100 TO E108-IN

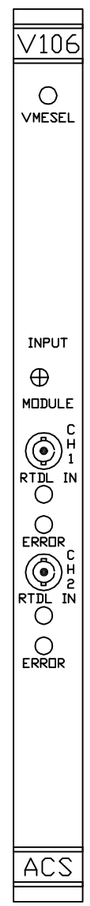

-3	-2	-1	REF DESIGNATOR	ITEM NO.	DESCRIPTION	MAT'L DWG NO./SPEC. NO.
QTY REQD						

INTERPRET IN GENERAL ACCORDANCE WITH ASME Y14.24M-1989
UNLESS OTHERWISE SPECIFIED DIMENSIONS ARE IN INCHES
DECIMAL TOLERANCES .X ±.030 .XX ±.015 .XXX ±.005
ANGULAR TOLERANCE ± .5°
NA FINISH
BREAK SHARP EDGES MAX. XX MIN. XX
OUTSTANDING ECN

Q.A. CATEGORY A-3 DATE
DRAWN BY PAPE 08/12/2002
CHECKED BY
DESIGN APPROVAL
ENGINEER APPROVAL H. HARTMANN
SUPVR. APPROVAL
NEXT ASSEMBLY

BROOKHAVEN NATIONAL LABORATORY
UPTON, N.Y. 11973
RHIC CONTROLS WIRING DIAGRAM
SERVICE BLDG 1004B
RTDL INPUTS
SIZE D
94028529
DRAWING NUMBER
REV. A
MATERIAL: ——— SCALE: NA WEIGHT: – SHEET 22 OF XX

*AUTOCAD

REV.	ZONE	ECN NO.	DATE	BY	CKR	APP.

THIS PAGE IS BLANK!

-3	-2	-1	REF DESIGNATOR	ITEM NO.	DESCRIPTION	MAT'L. DWG NO.,BNL NO.
QTY REQD						

INTERPRET IN GENERAL ACCORDANCE WITH ASME Y14.24M-1989

UNLESS OTHERWISE SPECIFIED DIMENSIONS ARE IN INCHES

DECIMAL TOLERANCES
.X ±.030
.XX ±.015
.XXX ±.005
ANGULAR TOLERANCE
± .5°

FINISH: NA

BREAK SHARP EDGES
MAX. XX MIN. XX

OUTSTANDING ECN

Q.A. CATEGORY A-3		DATE
DRAWN BY	Ed Koropsak	9/28/98
CHECKED BY		
DESIGN APPROVAL		
ENGINEER APPROVAL	R. MICHNOFF	9/28/98
SUPVR. APPROVAL		

NEXT ASSEMBLY

BROOKHAVEN NATIONAL LABORATORY
UPTON, N.Y. 11973

RHIC CONTROLS WIRING DIAGRAM
SERVICE BLDG 1004B
RTDL INPUTS

SIZE: D
DRAWING NUMBER: 94028529
REV.: A

MATERIAL: ——— SCALE: NA WEIGHT: – SHEET 23 OF XX

ACS, BNL 12/2/98 5:16 PM 8529_23.dwg

*AUTOCAD

REV.	ZONE	ECN NO.	DATE	BY	CKR	APP.

RTDL INPUT MODULE (1-0)

BLDG #: 1004B
RACK #: R4B05
CHASSIS ID: CEX-4B-RTDL1
SLOT #: 5
A16 BASE ADDRESS: 5000

ADDRESS
E44 TO E36-IN
E43 TO E35-OUT
E42 TO E34-IN
E41 TO E33-OUT
E40 TO E32-IN
E39 TO E31-IN
E38 TO E30-IN
E37 TO E29-IN

PARM ID
E71 TO E79-IN
E72 TO E80-IN
E73 TO E81-IN
E74 TO E82-IN
E75 TO E83-IN
E76 TO E84-IN
E77 TO E85-IN
E78 TO E86-OUT

rt-ydiset
FROM 1x2 B OUTPUT 1 RACK R4B19
REF SHEET 79
SERIAL LINK CODE 0x5X
RTDL PARM ID 0x01
E65 TO E68-IN
E66 TO E69-IN
E67 TO E70-OUT

rt-ydi
FROM 1x5 B OUTPUT 2 RACK R4B19
REF SHEET 79
SERIAL LINK CODE 0x8X
RTDL PARM ID 0x02
E87 TO E90-OUT
E88 TO E91-IN
E89 TO E92-IN

PARM ID
E93 TO E101-IN
E94 TO E102-IN
E95 TO E103-IN
E96 TO E104-IN
E97 TO E105-IN
E98 TO E106-IN
E99 TO E107-OUT
E100 TO E108-IN

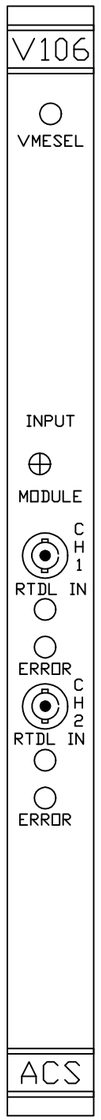

RTDL INPUT MODULE (1-1)

BLDG #: 1004B
RACK #: R4B05
CHASSIS ID: CEX-4B-RTDL1
SLOT #: 6
A16 BASE ADDRESS: 5100

ADDRESS
E44 TO E36-IN
E43 TO E35-OUT
E42 TO E34-IN
E41 TO E33-OUT
E40 TO E32-IN
E39 TO E31-IN
E38 TO E30-IN
E37 TO E29-OUT

PARM ID
E71 TO E79-IN
E72 TO E80-IN
E73 TO E81-IN
E74 TO E82-IN
E75 TO E83-IN
E76 TO E84-IN
E77 TO E85-OUT
E78 TO E86-OUT

rt-ydv
FROM 1x5 B OUTPUT 3 RACK R4B19
REF SHEET 79
SERIAL LINK CODE 0x9X
RTDL PARM ID 0x03
E65 TO E68-OUT
E66 TO E69-IN
E67 TO E70-OUT

rt-ydidot
FROM 1x5 B OUTPUT 4 RACK R4B19
REF SHEET 79
SERIAL LINK CODE 0xAX
PARM ID 0x04
E87 TO E90-OUT
E88 TO E91-OUT
E89 TO E92-IN

PARM ID
E93 TO E101-IN
E94 TO E102-IN
E95 TO E103-IN
E96 TO E104-IN
E97 TO E105-IN
E98 TO E106-OUT
E99 TO E107-IN
E100 TO E108-IN

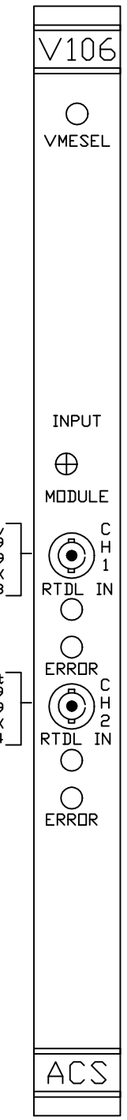

RTDL INPUT MODULE (1-2)

BLDG #: 1004B
RACK #: R4B05
CHASSIS ID: CEX-4B-RTDL1
SLOT #: 7
A16 BASE ADDRESS: 5200

ADDRESS
E44 TO E36-IN
E43 TO E35-OUT
E42 TO E34-IN
E41 TO E33-OUT
E40 TO E32-IN
E39 TO E31-IN
E38 TO E30-OUT
E37 TO E29-IN

PARM ID
E71 TO E79-IN
E72 TO E80-IN
E73 TO E81-IN
E74 TO E82-IN
E75 TO E83-IN
E76 TO E84-OUT
E77 TO E85-IN
E78 TO E86-OUT

rt-yqtv
FROM 1x5 A OUTPUT 3 RACK R4B19
REF SHEET 78
SERIAL LINK CODE 0x9X
RTDL PARM ID 0x05
E65 TO E68-OUT
E66 TO E69-IN
E67 TO E70-OUT

rt-yqiset
FROM 1x2 C OUTPUT 1 RACK R4B19
REF SHEET 79
SERIAL LINK CODE 0x5X
PARM ID 0x06
E87 TO E90-IN
E88 TO E91-IN
E89 TO E92-OUT

PARM ID
E93 TO E101-IN
E94 TO E102-IN
E95 TO E103-IN
E96 TO E104-IN
E97 TO E105-IN
E98 TO E106-OUT
E99 TO E107-OUT
E100 TO E108-IN

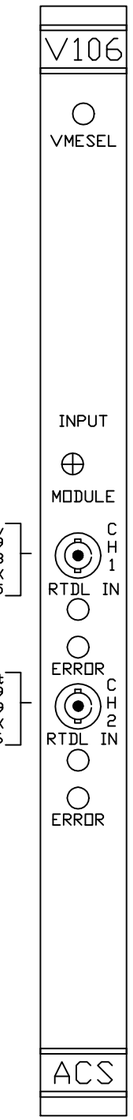

RTDL INPUT MODULE (1-3)

BLDG #: 1004B
RACK #: R4B05
CHASSIS ID: CEX-4B-RTDL1
SLOT #: 8
A16 BASE ADDRESS: 5300

ADDRESS
E44 TO E36-IN
E43 TO E35-OUT
E42 TO E34-IN
E41 TO E33-OUT
E40 TO E32-IN
E39 TO E31-IN
E38 TO E30-OUT
E37 TO E29-OUT

PARM ID
E71 TO E79-IN
E72 TO E80-IN
E73 TO E81-IN
E74 TO E82-IN
E75 TO E83-IN
E76 TO E84-OUT
E77 TO E85-OUT
E78 TO E86-OUT

rt-yqi
FROM 1x5 C OUTPUT 2 RACK R4B19
REF SHEET 79
SERIAL LINK CODE 0x8X
PARM ID 0x07
E65 TO E68-OUT
E66 TO E69-IN
E67 TO E70-IN

rt-yqv
FROM 1x5 C OUTPUT 3 RACK R4B19
REF SHEET X
SERIAL LINK CODE 0x9X
PARM ID 0x08
E87 TO E90-OUT
E88 TO E91-IN
E89 TO E92-OUT

PARM ID
E93 TO E101-IN
E94 TO E102-IN
E95 TO E103-IN
E96 TO E104-IN
E97 TO E105-OUT
E98 TO E106-IN
E99 TO E107-IN
E100 TO E108-IN

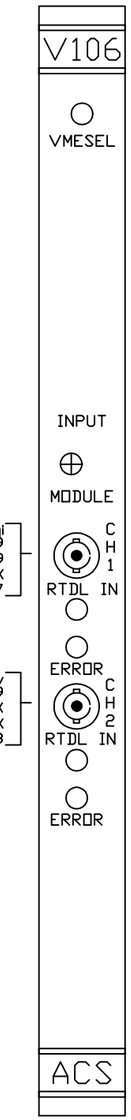

RTDL INPUT MODULE (1-4)

BLDG #: 1004B
RACK #: R4B05
CHASSIS ID: CEX-4B-RTDL1
SLOT #: 9
A16 BASE ADDRESS: 5400

ADDRESS
E44 TO E36-IN
E43 TO E35-OUT
E42 TO E34-IN
E41 TO E33-OUT
E40 TO E32-IN
E39 TO E31-OUT
E38 TO E30-IN
E37 TO E29-IN

PARM ID
E71 TO E79-IN
E72 TO E80-IN
E73 TO E81-IN
E74 TO E82-IN
E75 TO E83-OUT
E76 TO E84-IN
E77 TO E85-IN
E78 TO E86-OUT

rt-yqtiset
FROM 1x2 A OUTPUT 1 RACK R04B19
REF SHEET 78
SERIAL LINK CODE 0x5X
PARM ID 0x09
E65 TO E68-IN
E66 TO E69-IN
E67 TO E70-OUT

rt-yqti
FROM 1x5 A OUTPUT 2 RACK R4B19
REF SHEET 78
SERIAL LINK CODE 0x8X
PARM ID 0x0A
E87 TO E90-OUT
E88 TO E91-IN
E89 TO E92-IN

PARM ID
E93 TO E101-IN
E94 TO E102-IN
E95 TO E103-IN
E96 TO E104-IN
E97 TO E105-OUT
E98 TO E106-IN
E99 TO E107-OUT
E100 TO E108-IN

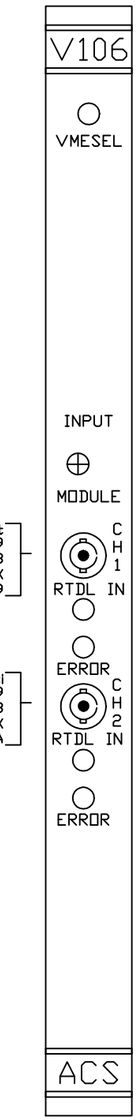

-3	-2	-1	REF DESIGNATOR	ITEM NO.	DESCRIPTION	MAT'L DWG NO./BNL NO.
QTY REQD						

INTERPRET IN GENERAL ACCORDANCE WITH ASME Y14.24M-1989
UNLESS OTHERWISE SPECIFIED DIMENSIONS ARE IN INCHES
DECIMAL TOLERANCES .X ±.030 .XX ±.015 .XXX ±.005
ANGULAR TOLERANCE ± .5°
FINISH NA
BREAK SHARP EDGES MAX. XX MIN. XX
OUTSTANDING ECN

Q.A. CATEGORY A-3
DRAWN BY Ed Koropsak 9/28/98
CHECKED BY
DESIGN APPROVAL
ENGINEER APPROVAL R. MICHNOFF 9/28/98
SUPVR. APPROVAL
NEXT ASSEMBLY

BROOKHAVEN NATIONAL LABORATORY
UPTON, N.Y. 11973
RHIC CONTROLS WIRING DIAGRAM
SERVICE BLDG 1004B
RTDL INPUTS

SIZE D
94028529
DRAWING NUMBER
REV. A
MATERIAL: ——— SCALE: NA WEIGHT: – SHEET 24

C-A, BNL 3/20/01 1:53 PM 8529_24.dwg

*AUTOCAD

REV.	ZONE	ECN NO.	DATE	BY	CKR	APP.

RTDL INPUT MODULE (1-5)

BLDG #: 1004B
RACK #: R4B05
CHASSIS ID: CEX-4B-RTDL1
SLOT #: 10
A16 BASE ADDRESS: 5500

ADDRESS
E44 TO E36-IN
E43 TO E35-OUT
E42 TO E34-IN
E41 TO E33-OUT
E40 TO E32-IN
E39 TO E31-OUT
E38 TO E30-IN
E37 TO E29-OUT

PARM ID
E71 TO E79-IN
E72 TO E80-IN
E73 TO E81-IN
E74 TO E82-IN
E75 TO E83-OUT
E76 TO E84-IN
E77 TO E85-OUT
E78 TO E86-OUT

rt-bdiset
FROM 1x2 B OUTPUT 1 RACK R4B07
REF SHEET 65
SERIAL LINK CODE 0x5X
RTDL PARM ID 0x0B

E65 TO E68-IN
E66 TO E69-IN
E67 TO E70-OUT

rt-bdi
FROM 1x5 B OUTPUT 2 RACK R4B07
REF SHEET 65
SERIAL CODE 0x8X
RTDL PARM ID 0x0C

E87 TO E90-OUT
E88 TO E91-IN
E89 TO E92-IN

PARM ID
E93 TO E101-IN
E94 TO E102-IN
E95 TO E103-IN
E96 TO E104-IN
E97 TO E105-OUT
E98 TO E106-OUT
E99 TO E107-IN
E100 TO E108-IN

V106
VMESEL
INPUT
MODULE
CH 1
RTDL IN
ERROR
CH 2
RTDL IN
ERROR
ACS

RTDL INPUT MODULE (1-6)

BLDG #: 1004B
RACK #: R4B05
CHASSIS ID: CEX-4B-RTDL1
SLOT #: 11
A16 BASE ADDRESS: 5600

ADDRESS
E44 TO E36-IN
E43 TO E35-OUT
E42 TO E34-IN
E41 TO E33-OUT
E40 TO E32-IN
E39 TO E31-OUT
E38 TO E30-OUT
E37 TO E29-IN

PARM ID
E71 TO E79-IN
E72 TO E80-IN
E73 TO E81-IN
E74 TO E82-IN
E75 TO E83-OUT
E76 TO E84-OUT
E77 TO E85-IN
E78 TO E86-OUT

rt-bdv
FROM 1x5 B OUTPUT 3 RACK R4B07
REF SHEET 65
SERIAL LINK CODE 0x9X
RTDL PARM ID 0x0D

E65 TO E68-OUT
E66 TO E69-IN
E67 TO E70-OUT

rt-bdidot
FROM 1x5 B OUTPUT 4 RACK R4B07
REF SHEET 65
SERIAL LINK CODE 0xAX
PARM ID 0x0E

E87 TO E90-OUT
E88 TO E91-OUT
E89 TO E92-IN

PARM ID
E93 TO E101-IN
E94 TO E102-IN
E95 TO E103-IN
E96 TO E104-IN
E97 TO E105-OUT
E98 TO E106-OUT
E99 TO E107-OUT
E100 TO E108-IN

V106
VMESEL
INPUT
MODULE
CH 1
RTDL IN
ERROR
CH 2
RTDL IN
ERROR
ACS

RTDL INPUT MODULE (1-7)

BLDG #: 1004B
RACK #: R4B05
CHASSIS ID: CEX-4B-RTDL1
SLOT #: 12
A16 BASE ADDRESS: 5700

ADDRESS
E44 TO E36-IN
E43 TO E35-OUT
E42 TO E34-IN
E41 TO E33-OUT
E40 TO E32-IN
E39 TO E31-OUT
E38 TO E30-OUT
E37 TO E29-OUT

PARM ID
E71 TO E79-IN
E72 TO E80-IN
E73 TO E81-IN
E74 TO E82-IN
E75 TO E83-OUT
E76 TO E84-OUT
E77 TO E85-OUT
E78 TO E86-OUT

rt-bqtv
FROM 1x5 A OUTPUT 3 RACK R4B07
REF SHEET 64
SERIAL LINK CODE 0x9X
RTDL PARM ID 0x0F

E65 TO E68-OUT
E66 TO E69-IN
E67 TO E70-OUT

rt-bqiset
FROM 1x2 C OUTPUT 1 RACK R4B07
REF SHEET 65
SERIAL LINK CODE 0x5X
PARM ID 0x10

E87 TO E90-IN
E88 TO E91-IN
E89 TO E92-OUT

PARM ID
E93 TO E101-IN
E94 TO E102-IN
E95 TO E103-IN
E96 TO E104-OUT
E97 TO E105-IN
E98 TO E106-IN
E99 TO E107-OUT
E100 TO E108-IN

V106
VMESEL
INPUT
MODULE
CH 1
RTDL IN
ERROR
CH 2
RTDL IN
ERROR
ACS

RTDL INPUT MODULE (1-8)

BLDG #: 1004B
RACK #: R4B05
CHASSIS ID: CEX-4B-RTDL1
SLOT #: 13
A16 BASE ADDRESS: 5800

ADDRESS
E44 TO E36-IN
E43 TO E35-OUT
E42 TO E34-IN
E41 TO E33-OUT
E40 TO E32-OUT
E39 TO E31-IN
E38 TO E30-IN
E37 TO E29-IN

PARM ID
E71 TO E79-IN
E72 TO E80-IN
E73 TO E81-IN
E74 TO E82-OUT
E75 TO E83-IN
E76 TO E84-IN
E77 TO E85-IN
E78 TO E86-OUT

rt-bqi
FROM 1x5 C OUTPUT 2 RACK R4B07
REF SHEET 65
SERIAL LINK CODE 0x8X
PARM ID 0x11

E65 TO E68-OUT
E66 TO E69-IN
E67 TO E70-IN

rt-bqv
FROM 1x5 C OUTPUT 3 RACK R4B07
REF SHEET 65
SERIAL LINK CODE 0x9X
PARM ID 0x12

E87 TO E90-OUT
E88 TO E91-IN
E89 TO E92-OUT

PARM ID
E93 TO E101-IN
E94 TO E102-IN
E95 TO E103-IN
E96 TO E104-OUT
E97 TO E105-IN
E98 TO E106-IN
E99 TO E107-OUT
E100 TO E108-IN

V106
VMESEL
INPUT
MODULE
CH 1
RTDL IN
ERROR
CH 2
RTDL IN
ERROR
ACS

RTDL INPUT MODULE (1-9)

BLDG #: 1004B
RACK #: R4B05
CHASSIS ID: CEX-4B-RTDL1
SLOT #: 14
A16 BASE ADDRESS: 5900

ADDRESS
E44 TO E36-IN
E43 TO E35-OUT
E42 TO E34-IN
E41 TO E33-OUT
E40 TO E32-OUT
E39 TO E31-IN
E38 TO E30-IN
E37 TO E29-OUT

PARM ID
E71 TO E79-IN
E72 TO E80-IN
E73 TO E81-IN
E74 TO E82-OUT
E75 TO E83-IN
E76 TO E84-IN
E77 TO E85-OUT
E78 TO E86-OUT

rt-bqtiset
FROM 1x2 A OUTPUT 1 RACK R04B07
REF SHEET 64
SERIAL LINK CODE 0x5X
PARM ID 0x13

E65 TO E68-IN
E66 TO E69-IN
E67 TO E70-OUT

rt-bqti
FROM 1x5 AOUTPUT 2 RACK R4B07
REF SHEET 64
SERIAL LINK CODE 0x8X
PARM ID 0x14

E87 TO E90-OUT
E88 TO E91-IN
E89 TO E92-IN

PARM ID
E93 TO E101-IN
E94 TO E102-IN
E95 TO E103-IN
E96 TO E104-OUT
E97 TO E105-IN
E98 TO E106-OUT
E99 TO E107-IN
E100 TO E108-IN

V106
VMESEL
INPUT
MODULE
CH 1
RTDL IN
ERROR
CH 2
RTDL IN
ERROR
ACS

-3	-2	-1	REF DESIGNATOR	ITEM NO.	DESCRIPTION	MAT'L DWG NO.,BNL NO.
QTY REQD						

INTERPRET IN GENERAL ACCORDANCE WITH ASME Y14.24M-1989
UNLESS OTHERWISE SPECIFIED DIMENSIONS ARE IN INCHES
DECIMAL TOLERANCES .X ±.030 .XX ±.015 .XXX ±.005
ANGULAR TOLERANCE ± .5°
OUTSTANDING ECN
NA FINISH
BREAK SHARP EDGES MAX. XX MIN. XX

Q.A. CATEGORY A-3
DRAWN BY Ed Koropsak 9/30/98
CHECKED BY
DESIGN APPROVAL
ENGINEER APPROVAL R. MICHNOFF 9/30/98
SUPVR. APPROVAL
NEXT ASSEMBLY

BROOKHAVEN NATIONAL LABORATORY
UPTON, N.Y. 11973
RHIC CONTROLS WIRING DIAGRAM
SERVICE BLDG 1004B
RTDL INPUTS
SIZE D
94028529
DRAWING NUMBER
REV. A
MATERIAL: ——— SCALE: NA WEIGHT: – SHEET 25

C-A, BNL 3/20/01 1:55 PM 8529_25.dwg

*AUTOCAD

REV.	ZONE	ECN NO.	DATE	BY	CKR	APP.

RTDL INPUT MODULE (1-A)

BLDG #: 1004B
RACK #: R4B05
CHASSIS ID: CEX-4B-RTDL1
SLOT #: 15
A16 BASE ADDRESS: 5A00

ADDRESS
E44 TO E36-IN
E43 TO E35-OUT
E42 TO E34-IN
E41 TO E33-OUT
E40 TO E32-OUT
E39 TO E31-IN
E38 TO E30-OUT
E37 TO E29-IN

PARM ID
E71 TO E79-IN
E72 TO E80-IN
E73 TO E81-IN
E74 TO E82-OUT
E75 TO E83-IN
E76 TO E84-OUT
E77 TO E85-IN
E78 TO E86-OUT

rt-bbdot
FROM wfg:4b-ps3.I0
REF SHEET 107
SERIAL LINK CODE 5x
RTDL PARM ID 0x15

E65 TO E68-IN
E66 TO E69-IN
E67 TO E70-OUT

rt-ybdot
FROM wfg:4b-ps3.I1
REF SHEET 107
SERIAL LINK CODE 5x
RTDL PARM ID 0x16

E87 TO E90-IN
E88 TO E91-IN
E89 TO E92-OUT

PARM ID
E93 TO E101-IN
E94 TO E102-IN
E95 TO E103-IN
E96 TO E104-OUT
E97 TO E105-IN
E98 TO E106-OUT
E99 TO E107-OUT
E100 TO E108-IN

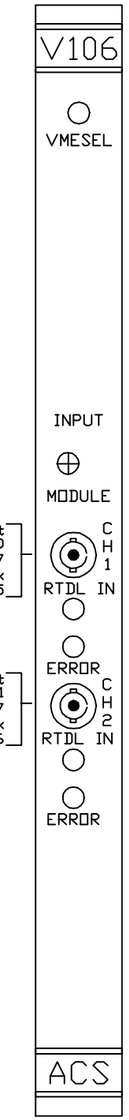

RTDL INPUT MODULE (1-B)

BLDG #: 1004B
RACK #: R4B05
CHASSIS ID: CEX-4B-RTDL1
SLOT #: 16
A16 BASE ADDRESS: 5C00

ADDRESS
E44 TO E36-IN
E43 TO E35-OUT
E42 TO E34-IN
E41 TO E33-OUT
E40 TO E32-OUT
E39 TO E31-OUT
E38 TO E30-IN
E37 TO E29-IN

PARM ID
E71 TO E79-IN
E72 TO E80-IN
E73 TO E81-IN
E74 TO E82-OUT
E75 TO E83-IN
E76 TO E84-OUT
E77 TO E85-OUT
E78 TO E86-OUT

rt-yrigidity-ddot
FROM wfg:4b-ps3.N0
REF SHEET 109
SERIAL LINK CODE 5x
RTDL PARM ID 0x17

E65 TO E68-IN
E66 TO E69-IN
E67 TO E70-OUT

rt-brigidity-ddot
FROM wfg:4b-ps3.N1
REF SHEET 109
SERIAL LINK CODE 5x
RTDL PARM ID 0x18

E87 TO E90-IN
E88 TO E91-IN
E89 TO E92-OUT

PARM ID
E93 TO E101-IN
E94 TO E102-IN
E95 TO E103-IN
E96 TO E104-OUT
E97 TO E105-OUT
E98 TO E106-IN
E99 TO E107-IN
E100 TO E108-IN

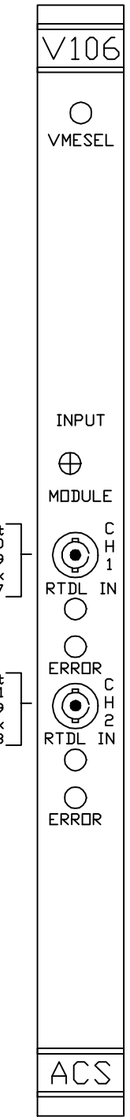

RTDL INPUT MODULE (1-C)

BLDG #: 1004B
RACK #: R4B05
CHASSIS ID: CEX-4B-RTDL1
SLOT #: 17
A16 BASE ADDRESS: 5B00

ADDRESS
E44 TO E36-IN
E43 TO E35-OUT
E42 TO E34-IN
E41 TO E33-OUT
E40 TO E32-OUT
E39 TO E31-IN
E38 TO E30-OUT
E37 TO E29-OUT

NAME XX
FROM x
REF SHEET x
SERIAL LINK CODE 0x
RTDL PARM ID 0x

E65 TO E68-?
E66 TO E69-?
E67 TO E70-?

NAME XX
FROM x
REF SHEET x
SERIAL LINK CODE 0x
RTDL PARM ID 0x

E87 TO E90-?
E88 TO E91-?
E89 TO E92-?

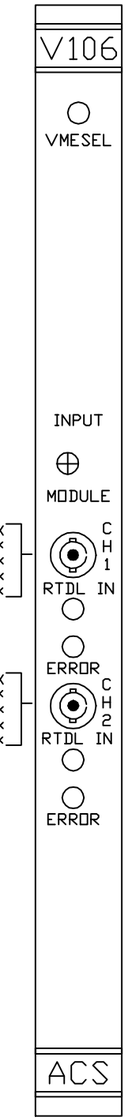

THIS BOARD IS
NOT INSTALLED.

-3	-2	-1	REF DESIGNATOR	ITEM NO.	DESCRIPTION	MAT'L DWG NO.,BNL NO.
QTY REQD						

INTERPRET IN GENERAL ACCORDANCE WITH ASME Y14.24M-1989
UNLESS OTHERWISE SPECIFIED DIMENSIONS ARE IN INCHES
DECIMAL TOLERANCES .X ±.030 .XX ±.015 .XXX ±.005
ANGULAR TOLERANCE ± .5°
OUTSTANDING ECN
NA FINISH
BREAK SHARP EDGES MAX. XX MIN. XX

Q.A. CATEGORY A-3		DATE	BROOKHAVEN NATIONAL LABORATORY
DRAWN BY	Ed Koropsak	9/30/98	UPTON, N.Y. 11973
CHECKED BY			RHIC CONTROLS WIRING DIAGRAM
DESIGN APPROVAL			SERVICE BLDG 1004B
ENGINEER APPROVAL	R. MICHNOFF	9/30/98	RTDL INPUTS
SUPVR. APPROVAL			
NEXT ASSEMBLY			SIZE D — 94028529 — REV. A
			DRAWING NUMBER
			MATERIAL: ——— SCALE: NA WEIGHT: – SHEET 26

BNL, BNL 8/17/00 1:42 PM 8529_26.dwg

*AUTOCAD

REV.	ZONE	ECN NO.	DATE	BY	CKR	APP.

RTDL INPUT MODULE (1-D)

BLDG #: 1004B
RACK #: R4B05
CHASSIS ID: CEX-4B-RTDL1
SLOT #: 18
A16 BASE ADDRESS: 5D00

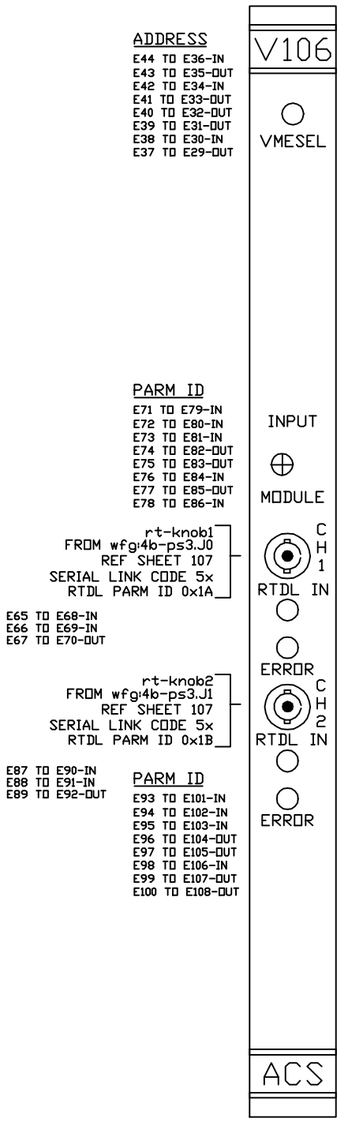

RTDL INPUT MODULE (1-E)

BLDG #: 1004B
RACK #: R4B05
CHASSIS ID: CEX-4B-RTDL1
SLOT #: 19
A16 BASE ADDRESS: 5E00

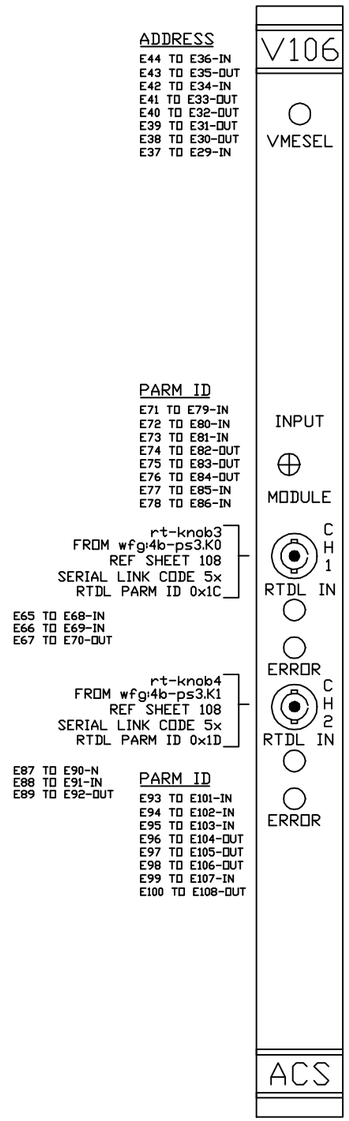

RTDL INPUT MODULE (1-F)

BLDG #: 1004B
RACK #: R4B05
CHASSIS ID: CEX-4B-RTDL1
SLOT #: 20
A16 BASE ADDRESS: 5F00

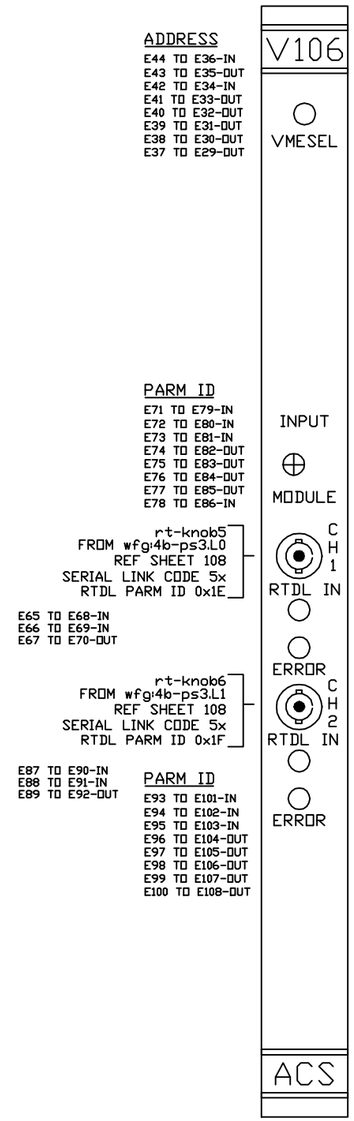

-3	-2	-1	REF DESIGNATOR	ITEM NO.	DESCRIPTION	MAT'L. DWG NO.,BNL NO.
QTY REQD						

INTERPRET IN GENERAL ACCORDANCE WITH ASME Y14.24M-1989
UNLESS OTHERWISE SPECIFIED DIMENSIONS ARE IN INCHES
DECIMAL TOLERANCES .X ±.030 .XX ±.015 .XXX ±.005
ANGULAR TOLERANCE ± .5°
OUTSTANDING ECN
NA FINISH
BREAK SHARP EDGES MAX. XX MIN. XX

Q.A. CATEGORY A-3		DATE	BROOKHAVEN NATIONAL LABORATORY
DRAWN BY	Ed Koropsak	9/30/98	UPTON, N.Y. 11973
CHECKED BY			RHIC CONTROLS WIRING DIAGRAM
DESIGN APPROVAL			SERVICE BLDG 1004B
ENGINEER APPROVAL	R. MICHNOFF	9/30/98	RTDL INPUTS
SUPVR. APPROVAL			
NEXT ASSEMBLY			SIZE D — 94028529 — REV. A
			DRAWING NUMBER
			MATERIAL: ——— SCALE: NA WEIGHT: – SHEET 27 OF XX

ACS, BNL 1/28/00 2:13 PM 8529_27.dwg

*AUTOCAD

REV.	ZONE	ECN NO.	DATE	BY	CKR	APP.

RTDL INPUT MODULE (2-0)

BLDG #: 1004B
RACK #: R4B05
CHASSIS ID: CEX-4B-RTDL2
SLOT #: 5
A16 BASE ADDRESS: 7000

ADDRESS
E44 TO E36-IN
E43 TO E35-OUT
E42 TO E34-OUT
E41 TO E33-OUT
E40 TO E32-IN
E39 TO E31-IN
E38 TO E30-IN
E37 TO E29-IN

PARM ID
E71 TO E79-IN
E72 TO E80-OUT
E73 TO E81-IN
E74 TO E82-IN
E75 TO E83-IN
E76 TO E84-IN
E77 TO E85-IN
E78 TO E86-IN

NAME rt-yrad-steer
FROM wfg:4b-ps3.A0
REF SHEET 102
SERIAL LINK CODE 5x
RTDL PARM ID 0x40

E65 TO E68-IN
E66 TO E69-IN
E67 TO E70-OUT

NAME rt-yfreq-steer
FROM wfg:4b-ps3.A1
REF SHEET 102
SERIAL LINK CODE 5x
RTDL PARM ID 0x41

E87 TO E90-IN
E88 TO E91-IN
E89 TO E92-OUT

PARM ID
E93 TO E101-IN
E94 TO E102-OUT
E95 TO E103-IN
E96 TO E104-IN
E97 TO E105-IN
E98 TO E106-IN
E99 TO E107-IN
E100 TO E108-OUT

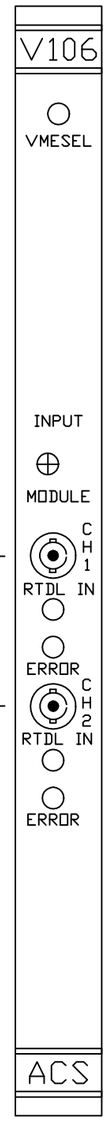

RTDL INPUT MODULE (2-1)

BLDG #: 1004B
RACK #: R4B05
CHASSIS ID: CEX-4B-RTDL2
SLOT #: 6
A16 BASE ADDRESS: 7100

ADDRESS
E44 TO E36-IN
E43 TO E35-OUT
E42 TO E34-OUT
E41 TO E33-OUT
E40 TO E32-IN
E39 TO E31-IN
E38 TO E30-IN
E37 TO E29-OUT

PARM ID
E71 TO E79-IN
E72 TO E80-OUT
E73 TO E81-IN
E74 TO E82-IN
E75 TO E83-IN
E76 TO E84-IN
E77 TO E85-OUT
E78 TO E86-IN

NAME rt-yphase
FROM wfg:4b-ps3.C0
REF SHEET 103
SERIAL LINK CODE 5x
RTDL PARM ID 0x42

E65 TO E68-IN
E66 TO E69-IN
E67 TO E70-OUT

NAME rt-ynextbucket
FROM SOFTWARE
REF SHEET N/A
SERIAL LINK CODE 5x
RTDL PARM ID 0x43

E87 TO E90-IN
E88 TO E91-IN
E89 TO E92-OUT

PARM ID
E93 TO E101-IN
E94 TO E102-OUT
E95 TO E103-IN
E96 TO E104-IN
E97 TO E105-IN
E98 TO E106-IN
E99 TO E107-OUT
E100 TO E108-OUT

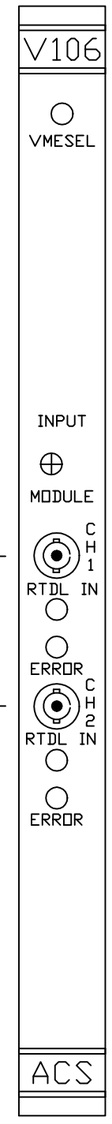

RTDL INPUT MODULE (2-2)

BLDG #: 1004B
RACK #: R4B05
CHASSIS ID: CEX-4B-RTDL2
SLOT #: 7
A16 BASE ADDRESS: 7200

ADDRESS
E44 TO E36-IN
E43 TO E35-OUT
E42 TO E34-OUT
E41 TO E33-OUT
E40 TO E32-IN
E39 TO E31-IN
E38 TO E30-OUT
E37 TO E29-IN

PARM ID
E71 TO E79-IN
E72 TO E80-OUT
E73 TO E81-IN
E74 TO E82-IN
E75 TO E83-IN
E76 TO E84-OUT
E77 TO E85-IN
E78 TO E86-IN

NAME rt-yrigidity
FROM wfg:4b-ps3.D0
REF SHEET 103
SERIAL LINK CODE 5x
RTDL PARM ID 0x44

E65 TO E68-IN
E66 TO E69-IN
E67 TO E70-OUT

NAME rt-brad-steer
FROM wfg:4b-ps3.B0
REF SHEET 103
SERIAL LINK CODE 5x
RTDL PARM ID 0x45

E87 TO E90-IN
E88 TO E91-IN
E89 TO E92-OUT

PARM ID
E93 TO E101-IN
E94 TO E102-OUT
E95 TO E103-IN
E96 TO E104-IN
E97 TO E105-IN
E98 TO E106-OUT
E99 TO E107-OUT
E100 TO E108-OUT

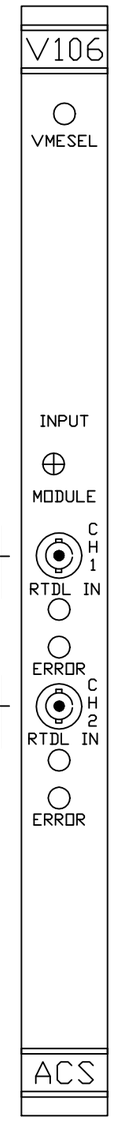

RTDL INPUT MODULE (2-3)

BLDG #: 1004B
RACK #: R4B05
CHASSIS ID: CEX-4B-RTDL2
SLOT #: 8
A16 BASE ADDRESS: 7300

ADDRESS
E44 TO E36-IN
E43 TO E35-OUT
E42 TO E34-OUT
E41 TO E33-OUT
E40 TO E32-IN
E39 TO E31-IN
E38 TO E30-OUT
E37 TO E29-OUT

PARM ID
E71 TO E79-IN
E72 TO E80-OUT
E73 TO E81-IN
E74 TO E82-IN
E75 TO E83-IN
E76 TO E84-OUT
E77 TO E85-OUT
E78 TO E86-IN

NAME rt-bfreq-steer
FROM wfg:4b-ps3.B1
REF SHEET 102
SERIAL LINK CODE 5x
RTDL PARM ID 0x46

E65 TO E68-IN
E66 TO E69-IN
E67 TO E70-OUT

NAME rt-bphase
FROM wfg:4b-ps3.C1
REF SHEET 103
SERIAL LINK CODE 5x
RTDL PARM ID 0x47

E87 TO E90-IN
E88 TO E91-IN
E89 TO E92-OUT

PARM ID
E93 TO E101-IN
E94 TO E102-OUT
E95 TO E103-IN
E96 TO E104-IN
E97 TO E105-IN
E98 TO E106-OUT
E99 TO E107-OUT
E100 TO E108-OUT

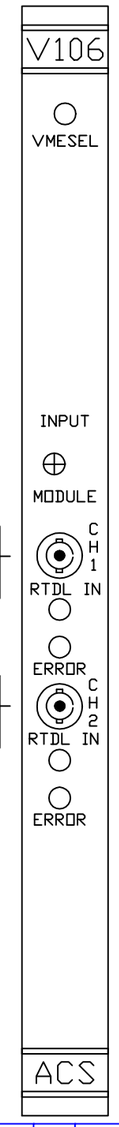

RTDL INPUT MODULE (2-4)

BLDG #: 1004B
RACK #: R4B05
CHASSIS ID: CEX-4B-RTDL2
SLOT #: 9
A16 BASE ADDRESS: 7400

ADDRESS
E44 TO E36-IN
E43 TO E35-OUT
E42 TO E34-OUT
E41 TO E33-OUT
E40 TO E32-IN
E39 TO E31-OUT
E38 TO E30-IN
E37 TO E29-IN

PARM ID
E71 TO E79-IN
E72 TO E80-OUT
E73 TO E81-IN
E74 TO E82-IN
E75 TO E83-OUT
E76 TO E84-IN
E77 TO E85-IN
E78 TO E86-IN

NAME rt-bnextbucket
FROM SOFTWARE
REF SHEET N/A
SERIAL LINK CODE 5x
RTDL PARM ID 0x48

E65 TO E68-IN
E66 TO E69-IN
E67 TO E70-OUT

NAME rt-brigidity
FROM wfg:4b-ps3.D1
REF SHEET 103
SERIAL LINK CODE 5x
RTDL PARM ID 0x49

E87 TO E90-IN
E88 TO E91-IN
E89 TO E92-OUT

PARM ID
E93 TO E101-IN
E94 TO E102-OUT
E95 TO E103-IN
E96 TO E104-IN
E97 TO E105-OUT
E98 TO E106-IN
E99 TO E107-IN
E100 TO E108-OUT

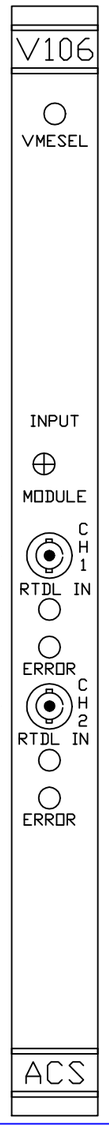

-3	-2	-1	REF DESIGNATOR	ITEM NO.	DESCRIPTION	MAT'L DWG NO.,BNL NO.
QTY REQD						

INTERPRET IN GENERAL ACCORDANCE WITH ASME Y14.24M-1989
UNLESS OTHERWISE SPECIFIED DIMENSIONS ARE IN INCHES
DECIMAL TOLERANCES .X ±.030 .XX ±.015 .XXX ±.005 ANGULAR TOLERANCE ± .5°
OUTSTANDING ECN: NA
FINISH: NA
BREAK SHARP EDGES MAX. XX MIN. XX

Q.A. CATEGORY A-3
DRAWN BY: Ed Koropsak — DATE: 9/30/98
CHECKED BY:
DESIGN APPROVAL:
ENGINEER APPROVAL: R. MICHNOFF — 9/30/98
SUPVR. APPROVAL:
NEXT ASSEMBLY

BROOKHAVEN NATIONAL LABORATORY
UPTON, N.Y. 11973
RHIC CONTROLS WIRING DIAGRAM
SERVICE BLDG 1004B
RTDL INPUTS

SIZE: D
DRAWING NUMBER: 94028529
REV.: A
MATERIAL: ——— SCALE: NA WEIGHT: – SHEET 28 OF XX

ACS, BNL 1/7/99 2:50 PM 8529_28.dwg

*AUTOCAD

REV.	ZONE	ECN NO.	DATE	BY	CKR	APP.

RTDL INPUT MODULE (2-5)

BLDG #: 1004B
RACK #: R4B05
CHASSIS ID: CEX-4B-RTDL2
SLOT #: 10
A16 BASE ADDRESS: 7500

ADDRESS
E44 TO E36-IN
E43 TO E35-OUT
E42 TO E34-OUT
E41 TO E33-OUT
E40 TO E32-IN
E39 TO E31-OUT
E38 TO E30-IN
E37 TO E29-OUT

PARM ID
E71 TO E79-IN
E72 TO E80-OUT
E73 TO E81-IN
E74 TO E82-IN
E75 TO E83-OUT
E76 TO E84-IN
E77 TO E85-OUT
E78 TO E86-IN

NAME rt-rfyradiusjump
FROM wfg:4b-ps3-M0
REF SHEET 109
SERIAL LINK CODE 5x
RTDL PARM ID 0x4A

E65 TO E68-IN
E66 TO E69-IN
E67 TO E70-OUT

NAME rt-rfbradiusjump
FROM wfg:4b-ps3-M1
REF SHEET 109
SERIAL LINK CODE 5x
RTDL PARM ID 0x4B

E87 TO E90-IN
E88 TO E91-IN
E89 TO E92-OUT

PARM ID
E93 TO E101-IN
E94 TO E102-OUT
E95 TO E103-IN
E96 TO E104-IN
E97 TO E105-OUT
E98 TO E106-IN
E99 TO E107-OUT
E100 TO E108-OUT

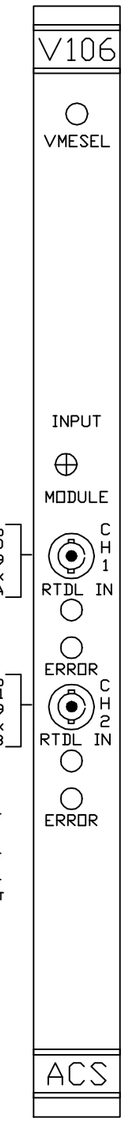

RTDL INPUT MODULE (2-6)

BLDG #: 1004B
RACK #: R4B05
CHASSIS ID: CEX-4B-RTDL2
SLOT #: 11
A16 BASE ADDRESS: 7600

ADDRESS
E44 TO E36-IN
E43 TO E35-OUT
E42 TO E34-OUT
E41 TO E33-OUT
E40 TO E32-IN
E39 TO E31-OUT
E38 TO E30-OUT
E37 TO E29-IN

PARM ID
E71 TO E79-IN
E72 TO E80-OUT
E73 TO E81-IN
E74 TO E82-IN
E75 TO E83-OUT
E76 TO E84-OUT
E77 TO E85-IN
E78 TO E86-IN

NAME rt-rfknob3
FROM SOFTWARE
REF SHEET N/A
SERIAL LINK CODE 5x
RTDL PARM ID 0x4C

E65 TO E68-IN
E66 TO E69-IN
E67 TO E70-OUT

NAME rt-rfknob4
FROM SOFTWARE
REF SHEET N/A
SERIAL LINK CODE 5x
RTDL PARM ID 0x4D

E87 TO E90-IN
E88 TO E91-IN
E89 TO E92-OUT

PARM ID
E93 TO E101-IN
E94 TO E102-OUT
E95 TO E103-IN
E96 TO E104-IN
E97 TO E105-OUT
E98 TO E106-OUT
E99 TO E107-IN
E100 TO E108-OUT

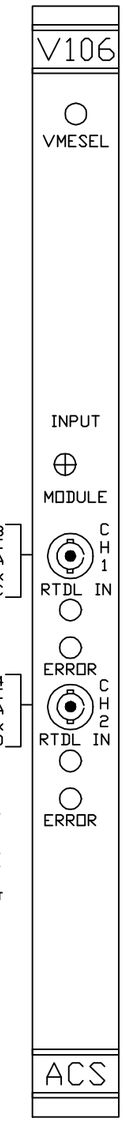

RTDL INPUT MODULE (2-7)

BLDG #: 1004B
RACK #: R4B05
CHASSIS ID: CEX-4B-RTDL2
SLOT #: 12
A16 BASE ADDRESS: 7700

ADDRESS
E44 TO E36-IN
E43 TO E35-OUT
E42 TO E34-OUT
E41 TO E33-OUT
E40 TO E32-IN
E39 TO E31-OUT
E38 TO E30-OUT
E37 TO E29-OUT

PARM ID
E71 TO E79-IN
E72 TO E80-OUT
E73 TO E81-IN
E74 TO E82-IN
E75 TO E83-OUT
E76 TO E84-OUT
E77 TO E85-OUT
E78 TO E86-IN

NAME rt-spare5
FROM x
REF SHEET x
SERIAL LINK CODE 5x
RTDL PARM ID 0x4E

E65 TO E68-IN
E66 TO E69-IN
E67 TO E70-OUT

NAME rt-spare6
FROM x
REF SHEET x
SERIAL LINK CODE 5x
RTDL PARM ID 0x4F

E87 TO E90-IN
E88 TO E91-IN
E89 TO E92-OUT

PARM ID
E93 TO E101-IN
E94 TO E102-OUT
E95 TO E103-IN
E96 TO E104-IN
E97 TO E105-OUT
E98 TO E106-OUT
E99 TO E107-OUT
E100 TO E108-OUT

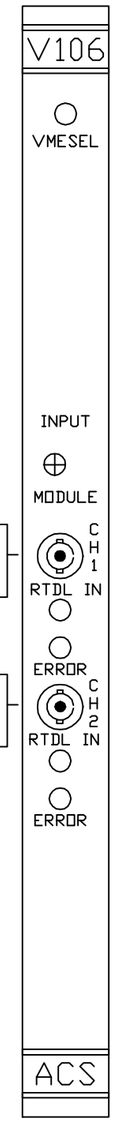

RTDL INPUT MODULE (2-8)

BLDG #: 1004B
RACK #: R4B05
CHASSIS ID: CEX-4B-RTDL2
SLOT #: 13
A16 BASE ADDRESS: 7800

ADDRESS
E44 TO E36-IN
E43 TO E35-OUT
E42 TO E34-OUT
E41 TO E33-OUT
E40 TO E32-OUT
E39 TO E31-IN
E38 TO E30-IN
E37 TO E29-IN

PARM ID
E71 TO E79-IN
E72 TO E80-OUT
E73 TO E81-IN
E74 TO E82-OUT
E75 TO E83-IN
E76 TO E84-IN
E77 TO E85-IN
E78 TO E86-IN

NAME rt-spare7
FROM wfg:4b-ps3-F0
REF SHEET 104
SERIAL LINK CODE 5x
RTDL PARM ID 0x50

E65 TO E68-IN
E66 TO E69-IN
E67 TO E70-OUT

NAME rt-spare8
FROM wfg:4b-ps3-F1
REF SHEET 104
SERIAL LINK CODE 5x
RTDL PARM ID 0x51

E87 TO E90-IN
E88 TO E91-IN
E89 TO E92-OUT

PARM ID
E93 TO E101-IN
E94 TO E102-OUT
E95 TO E103-IN
E96 TO E104-OUT
E97 TO E105-IN
E98 TO E106-IN
E99 TO E107-IN
E100 TO E108-OUT

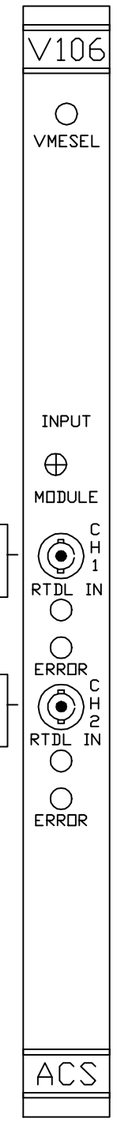

RTDL INPUT MODULE (2-9)

BLDG #: 1004B
RACK #: R4B05
CHASSIS ID: CEX-4B-RTDL2
SLOT #: 14
A16 BASE ADDRESS: 7900

ADDRESS
E44 TO E36-IN
E43 TO E35-OUT
E42 TO E34-OUT
E41 TO E33-OUT
E40 TO E32-OUT
E39 TO E31-IN
E38 TO E30-IN
E37 TO E29-OUT

PARM ID
E71 TO E79-IN
E72 TO E80-OUT
E73 TO E81-IN
E74 TO E82-OUT
E75 TO E83-IN
E76 TO E84-IN
E77 TO E85-OUT
E78 TO E86-IN

NAME rt-spare9
FROM wfg:4b-ps3-G0
REF SHEET 105
SERIAL LINK CODE 5x
RTDL PARM ID 0x52

E65 TO E68-IN
E66 TO E69-IN
E67 TO E70-OUT

NAME rt-spare10
FROM wfg:4b-ps3-G1
REF SHEET 105
SERIAL LINK CODE 5x
RTDL PARM ID 0x53

E87 TO E90-IN
E88 TO E91-IN
E89 TO E92-OUT

PARM ID
E93 TO E101-IN
E94 TO E102-OUT
E95 TO E103-IN
E96 TO E104-OUT
E97 TO E105-IN
E98 TO E106-IN
E99 TO E107-OUT
E100 TO E108-OUT

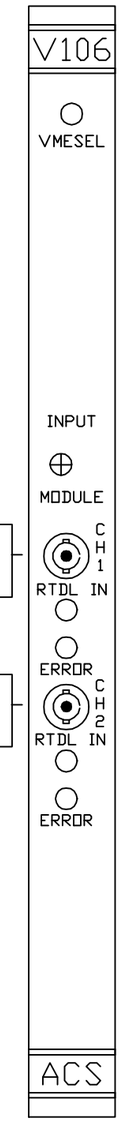

-3	-2	-1	REF DESIGNATOR	ITEM NO.	DESCRIPTION	MAT'L. DWG NO./BNL NO.
QTY REQD						

INTERPRET IN GENERAL ACCORDANCE WITH ASME Y14.24M-1989
UNLESS OTHERWISE SPECIFIED DIMENSIONS ARE IN INCHES
DECIMAL TOLERANCES .X ±.030 .XX ±.015 .XXX ±.005 ANGULAR TOLERANCE ± .5°
OUTSTANDING ECN
NA FINISH
BREAK SHARP EDGES MAX. XX MIN. XX

Q.A. CATEGORY A-3 | DATE
DRAWN BY Ed Koropsak 9/30/98
CHECKED BY
DESIGN APPROVAL
ENGINEER APPROVAL R. MICHNOFF 9/30/98
SUPVR. APPROVAL
NEXT ASSEMBLY

BROOKHAVEN NATIONAL LABORATORY
UPTON, N.Y. 11973
RHIC CONTROLS WIRING DIAGRAM
SERVICE BLDG 1004B
RTDL INPUTS

SIZE D | DRAWING NUMBER 94028529 | REV. A
MATERIAL: ——— | SCALE: NA | WEIGHT: – | SHEET 29 / 109

ACS, BNL 2/10/00 1:42 PM 8529_29.dwg

*AUTOCAD

REV.	ZONE	ECN NO.	DATE	BY	CKR	APP.

RTDL INPUT MODULE (2-A)

BLDG #: 1004B
RACK #: R4B05
CHASSIS ID: CEX-4B-RTDL2
SLOT #: 15
A16 BASE ADDRESS: 7A00

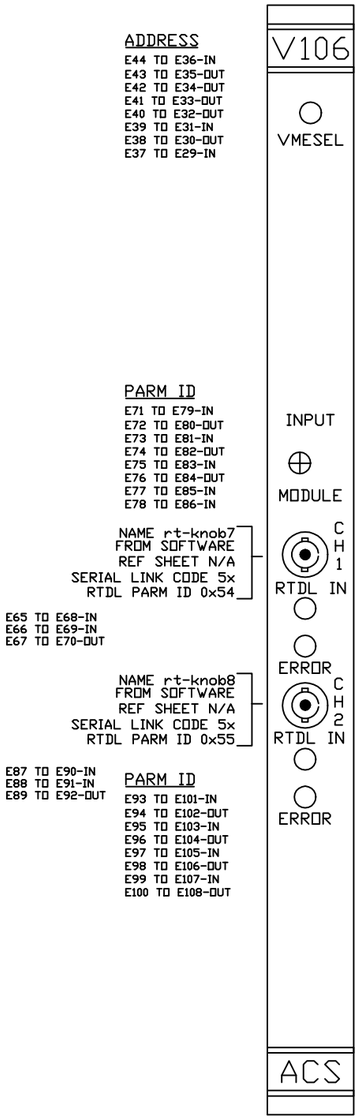

RTDL INPUT MODULE (2B)

BLDG #: 1004B
RACK #: R4B05
CHASSIS ID: CEX-4B-RTDL2
SLOT #: 16
A16 BASE ADDRESS: 7B00

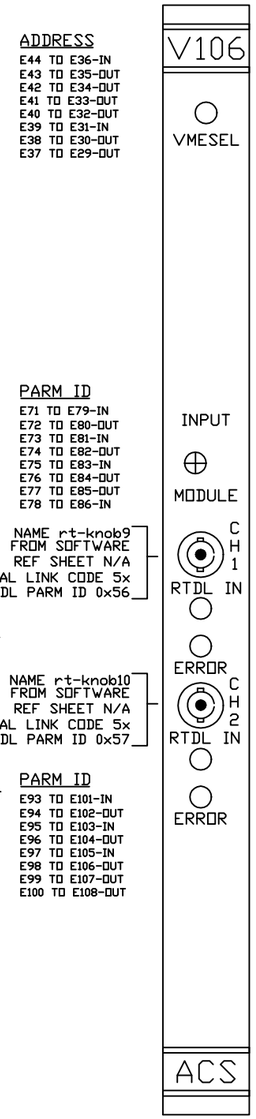

RTDL INPUT MODULE (2-C)

BLDG #: 1004B
RACK #: R4B05
CHASSIS ID: CEX-4B-RTDL2
SLOT #: 17
A16 BASE ADDRESS: 7C00

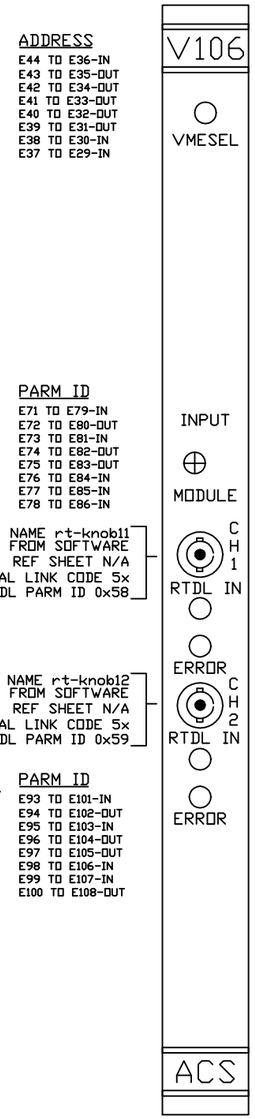

ACS, BNL 12/8/98 5:35 PM 8529_30.dwg

-3	-2	-1	REF DESIGNATOR	ITEM NO.	DESCRIPTION	MAT'L DWG NO.,BNL NO.
QTY REQD						

INTERPRET IN GENERAL ACCORDANCE WITH ASME Y14.24M-1989
UNLESS OTHERWISE SPECIFIED DIMENSIONS ARE IN INCHES
DECIMAL TOLERANCES .X ±.030 .XX ±.015 .XXX ±.005 ANGULAR TOLERANCE ± .5°
FINISH NA
BREAK SHARP EDGES MAX. XX MIN. XX
OUTSTANDING ECN

Q.A. CATEGORY A-3		DATE
DRAWN BY	Ed Koropsak	9/30/98
CHECKED BY		
DESIGN APPROVAL		
ENGINEER APPROVAL	R. MICHNOFF	9/30/98
SUPVR. APPROVAL		
NEXT ASSEMBLY		

BROOKHAVEN NATIONAL LABORATORY
UPTON, N.Y. 11973
RHIC CONTROLS WIRING DIAGRAM
SERVICE BLDG 1004B
RTDL INPUTS

SIZE D | DRAWING NUMBER 94028529 | REV. A
MATERIAL: ——— | SCALE: NA | WEIGHT: – | SHEET 30 OF XX

*AUTOCAD

REV.	ZONE	ECN NO.	DATE	BY	CKR	APP.

RTDL INPUT MODULE (2-D)

BLDG #: 1004B
RACK #: R4B05
CHASSIS ID: CEX-4B-RTDL2
SLOT #: 18
A16 BASE ADDRESS: 7D00

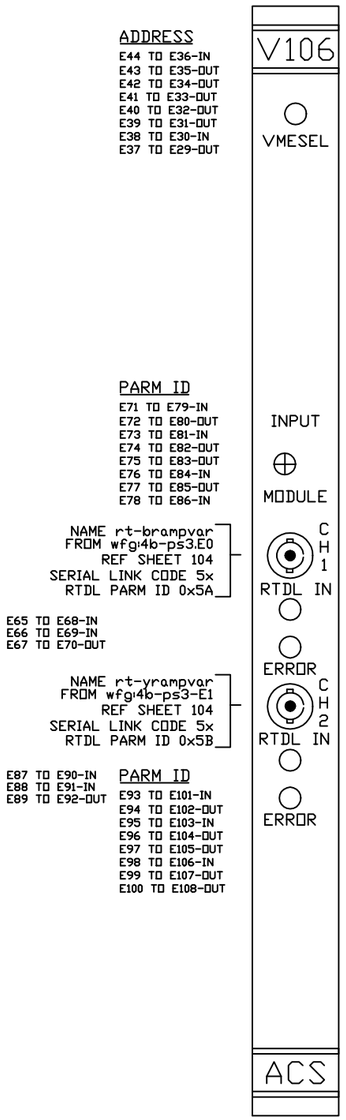

RTDL INPUT MODULE (2-E)

BLDG #: 1004B
RACK #: R4B05
CHASSIS ID: CEX-4B-RTDL2
SLOT #: 19
A16 BASE ADDRESS: 7E00

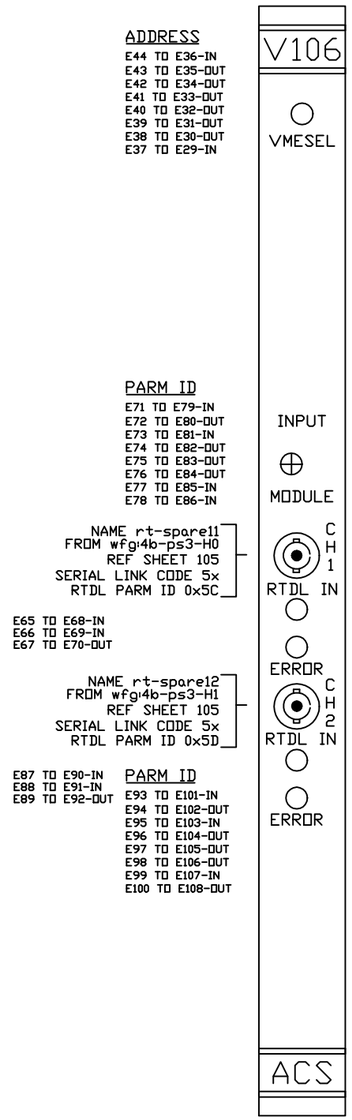

RTDL INPUT MODULE (2-F)

BLDG #: 1004B
RACK #: R4B05
CHASSIS ID: CEX-4B-RTDL2
SLOT #: 20
A16 BASE ADDRESS: 7F00

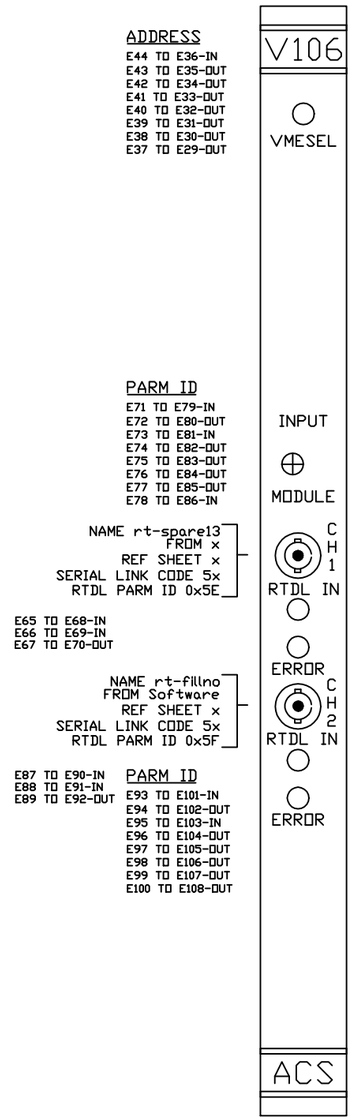

C-A, BNL 3/20/01 1:56 PM 8529_31.dwg

-3	-2	-1	REF DESIGNATOR	ITEM NO.	DESCRIPTION	MAT'L DWG NO./BNL NO.
QTY REQD						

INTERPRET IN GENERAL ACCORDANCE WITH ASME Y14.24M-1989

UNLESS OTHERWISE SPECIFIED DIMENSIONS ARE IN INCHES

DECIMAL TOLERANCES
.X ±.030
.XX ±.015
.XXX ±.005
ANGULAR TOLERANCE
± .5°

NA FINISH — BREAK SHARP EDGES — MAX. XX MIN. XX

OUTSTANDING ECN

Q.A. CATEGORY A-3		DATE
DRAWN BY	Ed Koropsak	9/30/98
CHECKED BY		
DESIGN APPROVAL		
ENGINEER APPROVAL	R. MICHNOFF	9/30/98
SUPVR. APPROVAL		

NEXT ASSEMBLY

BROOKHAVEN NATIONAL LABORATORY
UPTON, N.Y. 11973

RHIC CONTROLS WIRING DIAGRAM
SERVICE BLDG 1004B
RTDL INPUTS

SIZE D — DRAWING NUMBER 94028529 — REV. A

MATERIAL: ——— SCALE: NA WEIGHT: – SHEET 31 OF XX

*AUTOCAD

Controls, bnl 5/4/2004 11:14 AM 8529_52.dwg

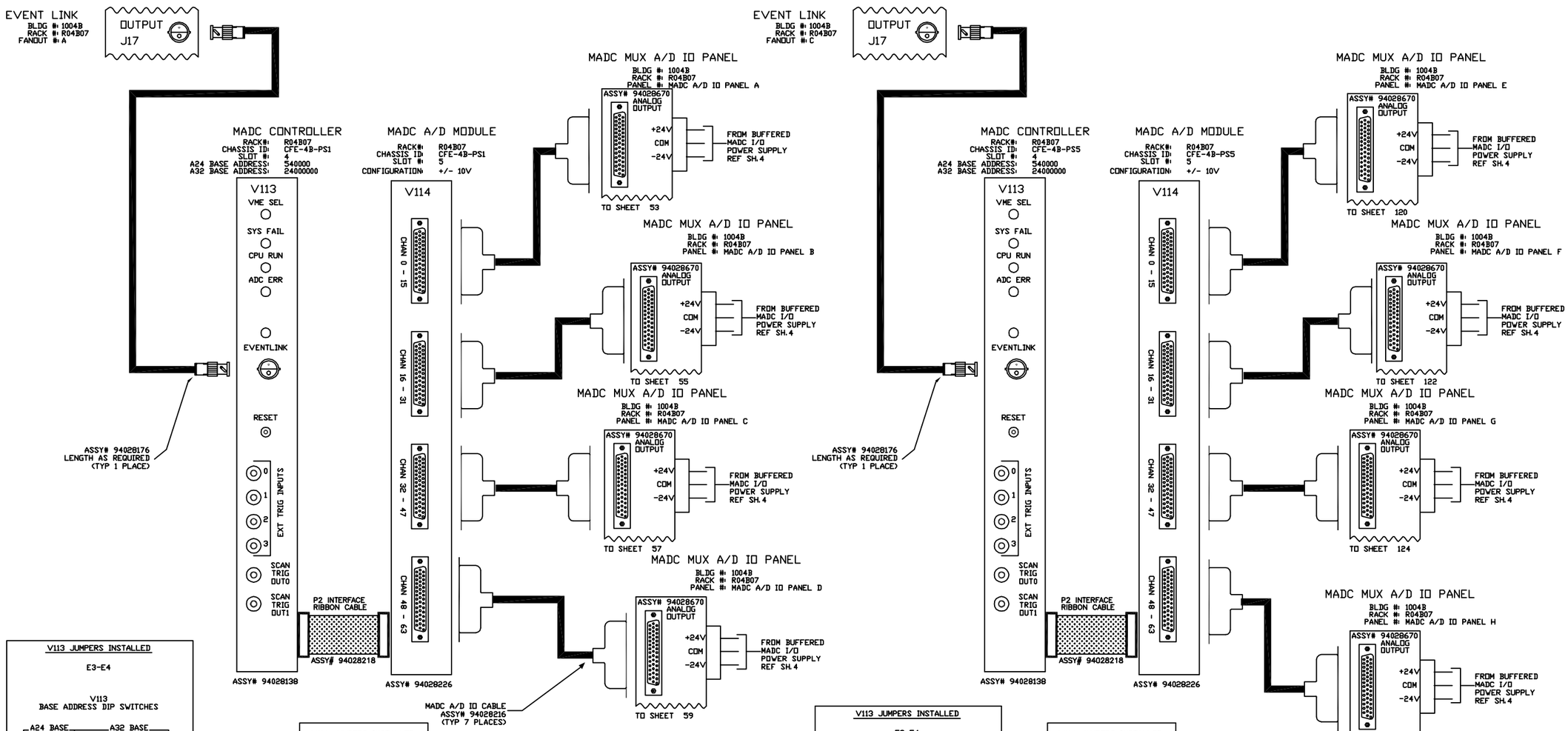

V113 JUMPERS INSTALLED

E3-E4

V113
BASE ADDRESS DIP SWITCHES

A24 BASE — A32 BASE

A18 A19 A20 A21 A22 A23 A22 A23 — A24 A25 A26 A27 A28 A29 A30 A31

SW1 SW2

PUSH SWITCH IN DIRECTION SHOWN

V114 JUMPERS INSTALLED

J1, J2, J4, J5, J9
J19, J15, J21

ALL OTHER JUMPERS OUT

V113 JUMPERS INSTALLED

E3-E4

V113
BASE ADDRESS DIP SWITCHES

A24 BASE — A32 BASE

A18 A19 A20 A21 A22 A23 A22 A23 — A24 A25 A26 A27 A28 A29 A30 A31

SW1 SW2

PUSH SWITCH IN DIRECTION SHOWN

V114 JUMPERS INSTALLED

J1, J2, J4, J5, J9
J19, J15, J21

ALL OTHER JUMPERS OUT

REV.	ZONE	ECN NO.	DATE	BY	CKR	APP.

-3	-2	-1	REF DESIGNATOR	ITEM NO.	DESCRIPTION	MAT'L DWG NO./BNL NO.
QTY REQD						

INTERPRET IN GENERAL ACCORDANCE WITH ASME Y14.24M-1989

UNLESS OTHERWISE SPECIFIED DIMENSIONS ARE IN INCHES

DECIMAL TOLERANCES
.X ±.030
.XX ±.015
.XXX ±.005
ANGULAR TOLERANCE
± .5°

NA FINISH — BREAK SHARP EDGES MAX. XX MIN. XX

OUTSTANDING ECN

		DATE
Q.A. CATEGORY	A-3	
DRAWN BY	Ed Koropsak	10/2/98
CHECKED BY		
DESIGN APPROVAL		
ENGINEER APPROVAL	R. MICHNOFF	10/2/98
SUPVR. APPROVAL		

NEXT ASSEMBLY

BROOKHAVEN NATIONAL LABORATORY
UPTON, N.Y. 11973

RHIC CONTROLS WIRING DIAGRAM
1004B, VME CHASSIS CFE-4B-PS1/PS5
MADC SYSTEM

SIZE D — DRAWING NUMBER 94028529 — REV. A

MATERIAL: ——— SCALE: FULL WEIGHT: – SHEET 52

*AUTOCAD

Controls, C-AD 4/27/2004 2:12 PM 8529_53.dwg

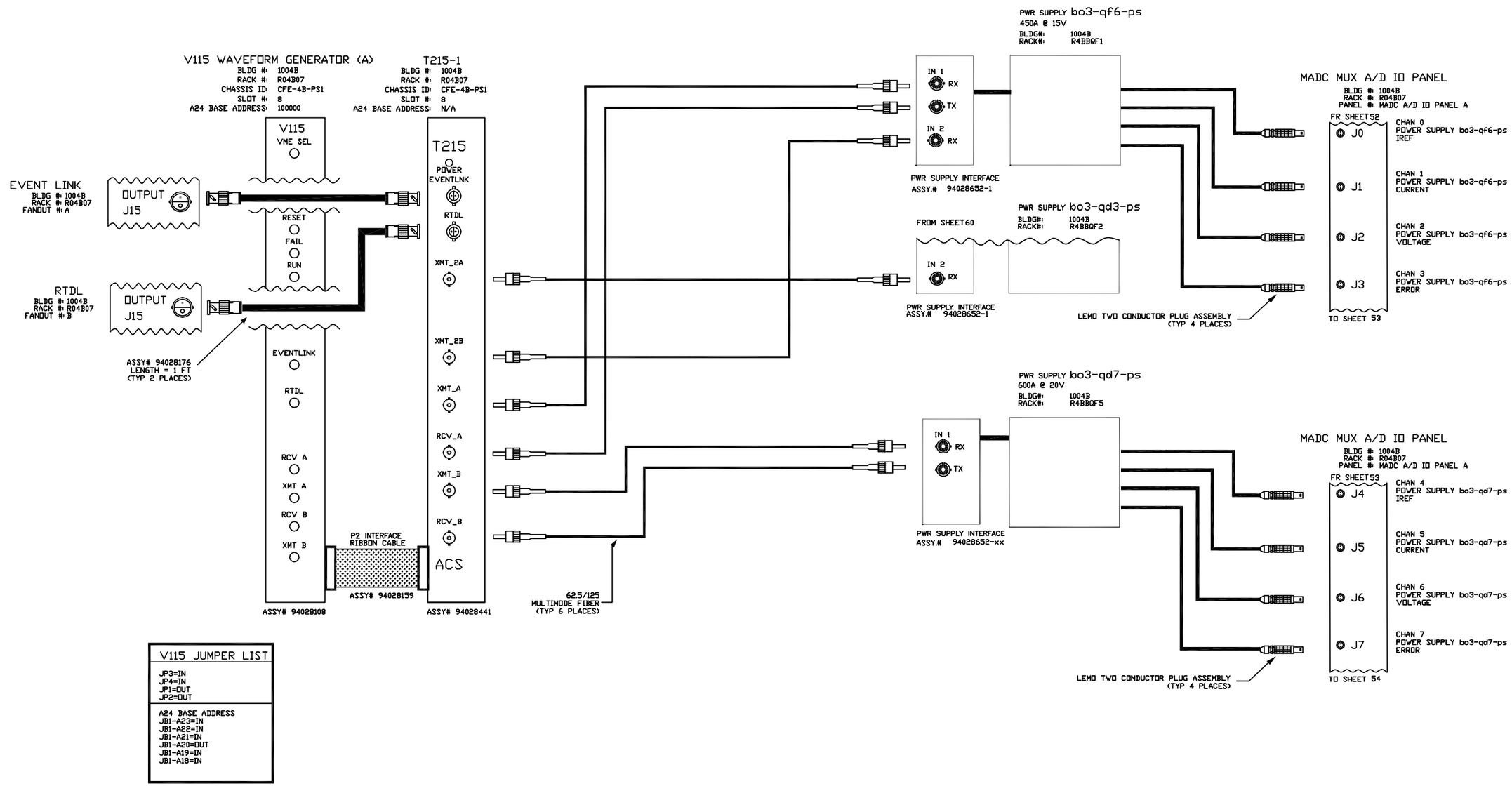

V115 JUMPER LIST
JP3=IN JP4=IN JP1=OUT JP2=OUT
A24 BASE ADDRESS JB1-A23=IN JB1-A22=IN JB1-A21=IN JB1-A20=OUT JB1-A19=IN JB1-A18=IN

REV.	ZONE	ECN NO.	DATE	BY	CKR	APP.

-3	-2	-1	REF DESIGNATOR	ITEM NO.	DESCRIPTION	MAT'L DWG NO./BNL NO.
QTY REQD						

INTERPRET IN GENERAL ACCORDANCE WITH ASME Y14.24M-1989

UNLESS OTHERWISE SPECIFIED DIMENSIONS ARE IN INCHES

DECIMAL TOLERANCES
.X ±.030
.XX ±.015
.XXX ±.005
ANGULAR TOLERANCE ± .5°

NA FINISH

BREAK SHARP EDGES MAX. XX MIN. XX

OUTSTANDING ECN

Q.A. CATEGORY A-3

		DATE
DRAWN BY	Ed Koropsak	10/1/98
CHECKED BY		
DESIGN APPROVAL		
ENGINEER APPROVAL	R.MICHNOFF	10/1/98
SUPVR. APPROVAL		

NEXT ASSEMBLY

BROOKHAVEN NATIONAL LABORATORY
UPTON, N.Y. 11973

RHIC CONTROLS WIRING DIAGRAM

BLDG. 1004B, CFE-4B-PS1

bo3-qf6-ps/bo3-qd7-ps

SIZE D — DRAWING NUMBER 94028529 — REV. A

MATERIAL: ——— SCALE: NA WEIGHT: – SHEET 53

*AUTOCAD

Controls, C-AD 4/27/2004 2:17 PM 8529_54.dwg

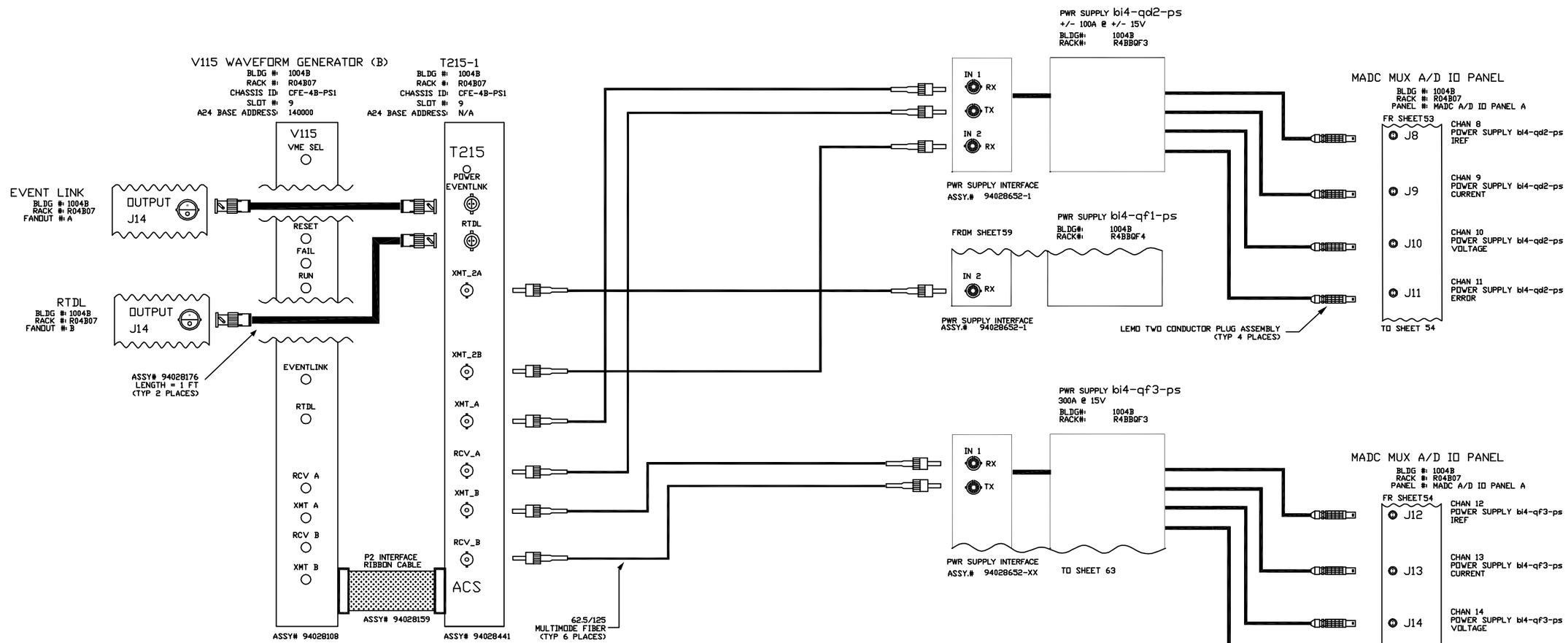

V115 JUMPER LIST
JP3=IN JP4=IN JP1=OUT JP2=OUT
A24 BASE ADDRESS JB1-A23=IN JB1-A22=IN JB1-A21=IN JB1-A20=OUT JB1-A19=IN JB1-A18=OUT

-3	-2	-1	REF DESIGNATOR	ITEM NO.	DESCRIPTION	MAT'L DWG NO./BNL NO.
QTY REQD						

INTERPRET IN GENERAL ACCORDANCE WITH ASME Y14.24M-1989

UNLESS OTHERWISE SPECIFIED DIMENSIONS ARE IN INCHES

DECIMAL TOLERANCES
.X ±.030
.XX ±.015
.XXX ±.005
ANGULAR TOLERANCE ± .5°

BREAK SHARP EDGES MAX. XX MIN. XX

FINISH NA

OUTSTANDING ECN

Q.A. CATEGORY A-3

		DATE
DRAWN BY	Ed Koropsak	10/1/98
CHECKED BY		
DESIGN APPROVAL		
ENGINEER APPROVAL	R.MICHNOFF	10/1/98
SUPVR. APPROVAL		

NEXT ASSEMBLY

BROOKHAVEN NATIONAL LABORATORY
UPTON, N.Y. 11973

RHIC CONTROLS WIRING DIAGRAM

BLDG. 1004B, CFE-4B-PS1

bi4-qd2-ps/bi4-qf3-ps

SIZE D | DRAWING NUMBER 94028529 | REV. A

MATERIAL: ——— SCALE: NA WEIGHT: – SHEET 54

*AUTOCAD

Controls, C-AD 4/27/2004 2:24 PM 8529_55.dwg

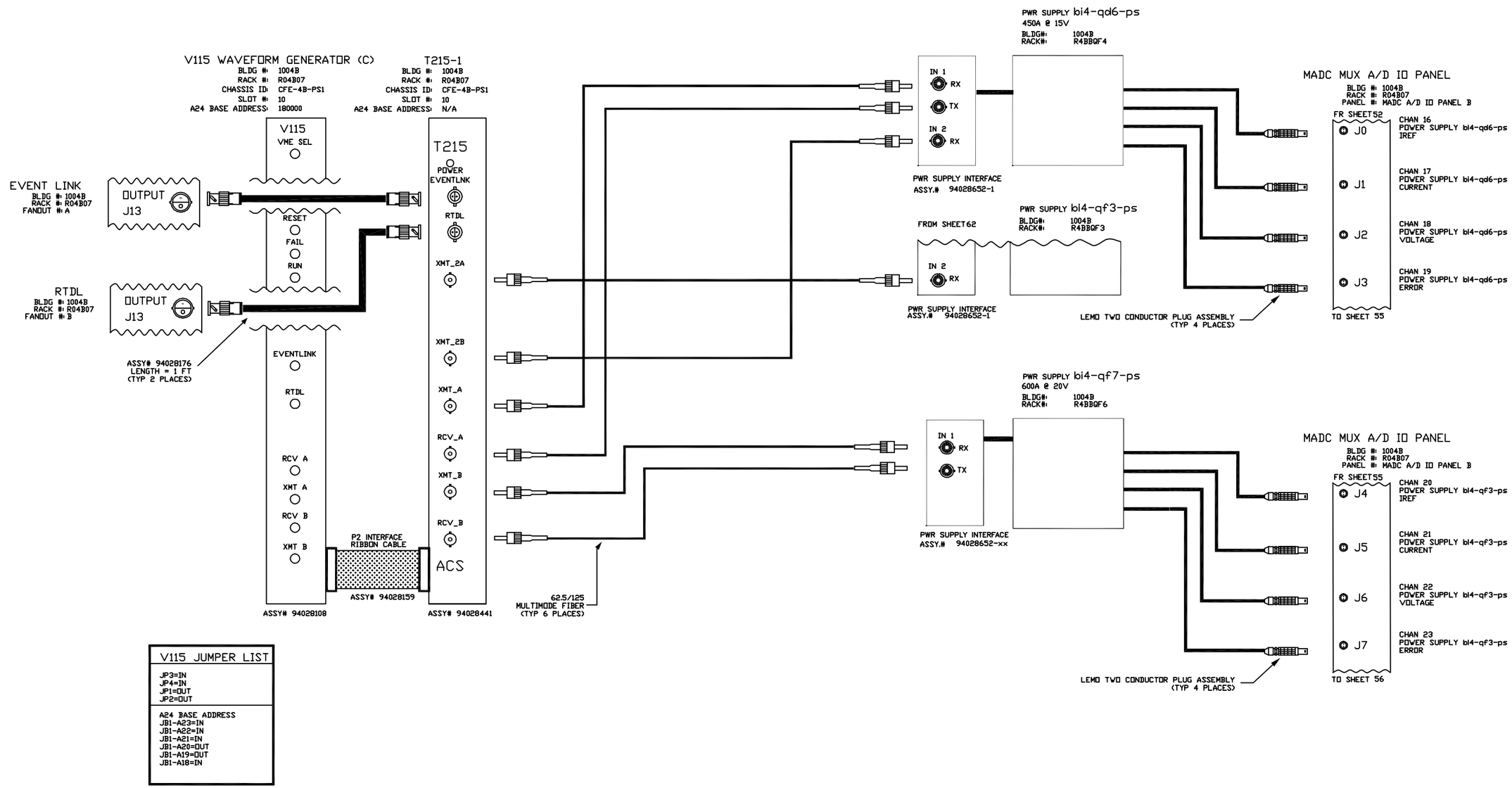

V115 JUMPER LIST
JP3=IN JP4=IN JP1=OUT JP2=OUT
A24 BASE ADDRESS JB1-A23=IN JB1-A22=IN JB1-A21=IN JB1-A20=OUT JB1-A19=OUT JB1-A18=IN

-3	-2	-1	REF DESIGNATOR	ITEM NO.	DESCRIPTION	MAT'L DWG NO./BNL NO.
QTY REQD						

INTERPRET IN GENERAL ACCORDANCE WITH ASME Y14.24M-1989

UNLESS OTHERWISE SPECIFIED DIMENSIONS ARE IN INCHES

DECIMAL TOLERANCES
.X ±.030
.XX ±.015
.XXX ±.005
ANGULAR TOLERANCE
± .5°

OUTSTANDING ECN

NA FINISH

BREAK SHARP EDGES
MAX. XX MIN. XX

Q.A. CATEGORY A-3

		DATE
DRAWN BY	Ed Koropsak	10/1/98
CHECKED BY		
DESIGN APPROVAL		
ENGINEER APPROVAL	R.MICHNOFF	10/1/98
SUPVR. APPROVAL		

NEXT ASSEMBLY

BROOKHAVEN NATIONAL LABORATORY
UPTON, N.Y. 11973

RHIC CONTROLS WIRING DIAGRAM

BLDG. 1004B, CFE-4B-PS1

bi4-qd6-ps/bi4-qf7-ps

SIZE D

94028529

DRAWING NUMBER

REV. A

MATERIAL: ——— SCALE: NA WEIGHT: – SHEET 55

*AUTOCAD

ACS, BNL 8/27/99 1:12 PM 8529_56.dwg

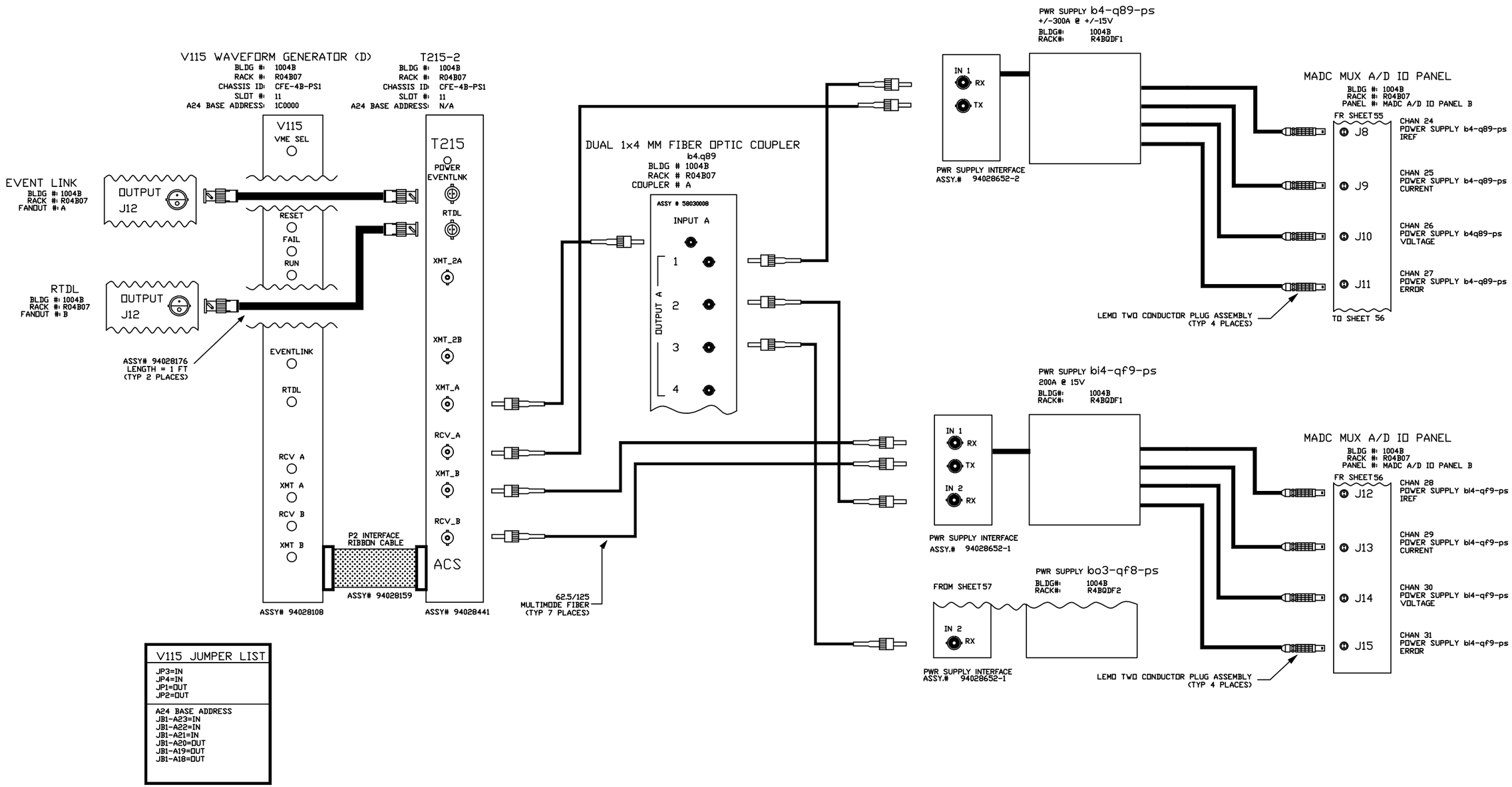

V115 JUMPER LIST
JP3=IN JP4=IN JP1=OUT JP2=OUT
A24 BASE ADDRESS JB1-A23=IN JB1-A22=IN JB1-A21=IN JB1-A20=OUT JB1-A19=OUT JB1-A18=OUT

-3	-2	-1	REF DESIGNATOR	ITEM NO.	DESCRIPTION	MAT'L DWG NO.,BNL NO.
QTY REQD						

INTERPRET IN GENERAL ACCORDANCE WITH ASME Y14.24M-1989

UNLESS OTHERWISE SPECIFIED DIMENSIONS ARE IN INCHES

DECIMAL TOLERANCES
.X ±.030
.XX ±.015
.XXX ±.005
ANGULAR TOLERANCE
± .5°

NA FINISH

BREAK SHARP EDGES
MAX. XX MIN. XX

OUTSTANDING ECN

Q.A. CATEGORY A-3		DATE
DRAWN BY	Ed Koropsak	9/30/98
CHECKED BY		
DESIGN APPROVAL		
ENGINEER APPROVAL	R.MICHNOFF	9/30/98
SUPVR. APPROVAL		

NEXT ASSEMBLY

BROOKHAVEN NATIONAL LABORATORY
UPTON, N.Y. 11973

RHIC CONTROLS WIRING DIAGRAM
BLDG. 1004B, CFE-4B-PS1
b4-q89-ps/bi4-qf9-ps

SIZE D
94028529
DRAWING NUMBER
REV. A

MATERIAL: ——— SCALE: NA WEIGHT: – SHEET 56 OF x

*AUTOCAD

REV.	ZONE	ECN NO.	DATE	BY	CKR	APP.

ACS, BNL 8/27/99 1:13 PM 8529_57.dwg

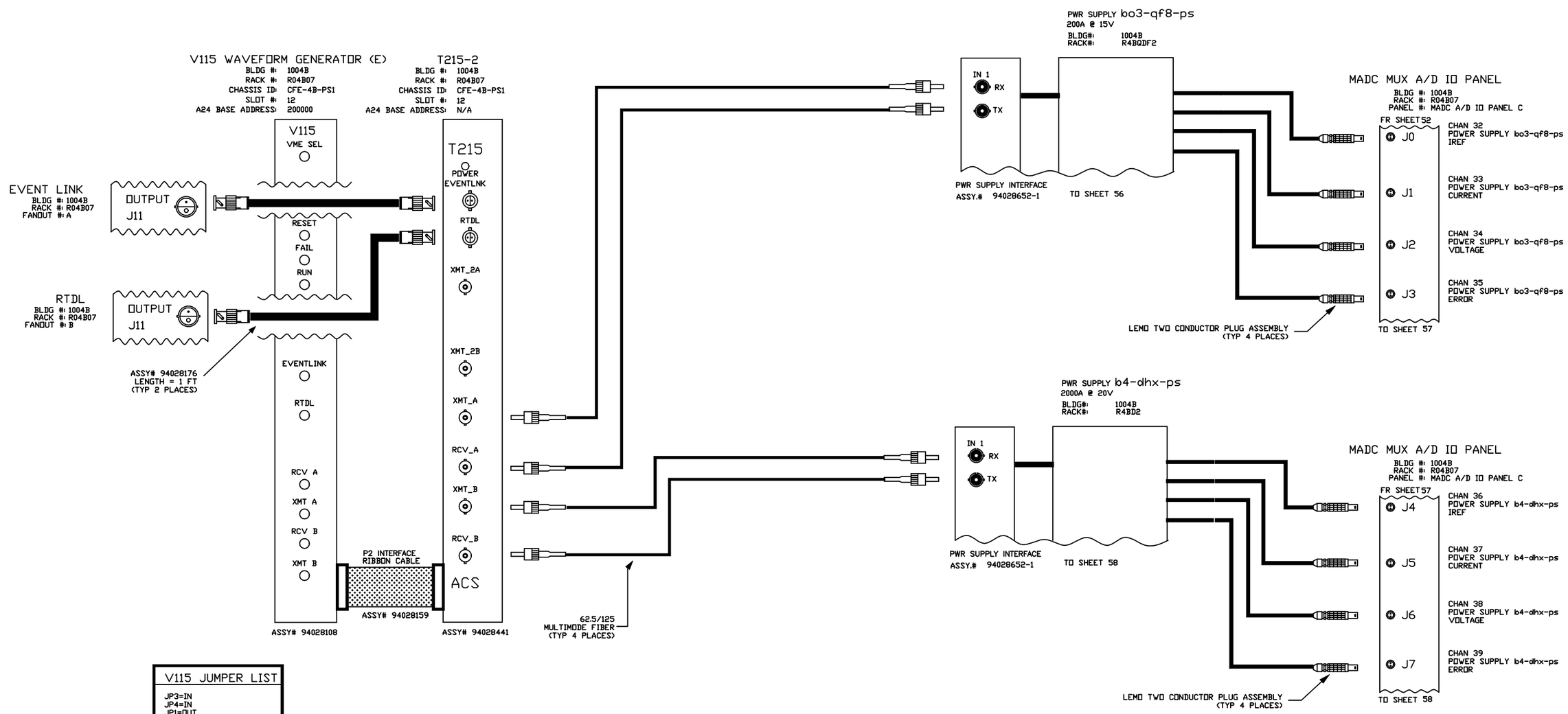

V115 JUMPER LIST
JP3=IN JP4=IN JP1=OUT JP2=OUT
A24 BASE ADDRESS JB1-A23=IN JB1-A22=IN JB1-A21=OUT JB1-A20=IN JB1-A19=IN JB1-A18=IN

-3	-2	-1	REF DESIGNATOR	ITEM NO.	DESCRIPTION	MAT'L. DWG NO./INL NO.
QTY REQD						

INTERPRET IN GENERAL ACCORDANCE WITH ASME Y14.24M-1989

UNLESS OTHERWISE SPECIFIED DIMENSIONS ARE IN INCHES

DECIMAL TOLERANCES
X ±.030
.XX ±.015
.XXX ±.005
ANGULAR TOLERANCE
± .5°

NA FINISH — BREAK SHARP EDGES — MAX. XX MIN. XX

OUTSTANDING ECN

Q.A. CATEGORY A-3		DATE
DRAWN BY	Ed Koropsak	10/1/98
CHECKED BY		
DESIGN APPROVAL		
ENGINEER APPROVAL	R.MICHNOFF	10/1/98
SUPVR. APPROVAL		

NEXT ASSEMBLY

BROOKHAVEN NATIONAL LABORATORY
UPTON, N.Y. 11973

RHIC CONTROLS WIRING DIAGRAM

BLDG. 1004B, CFE-4B-PS1

bo3-qf8-ps/b4-dhx-ps

SIZE D — DRAWING NUMBER 94028529 — REV. A

MATERIAL: ——— SCALE: NA WEIGHT: – SHEET 57 OF x

1 *AUTOCAD

REV.	ZONE	ECN NO.	DATE	BY	CKR	APP.

Controls, bnl 5/4/2004 11:29 AM 8529_58.dwg

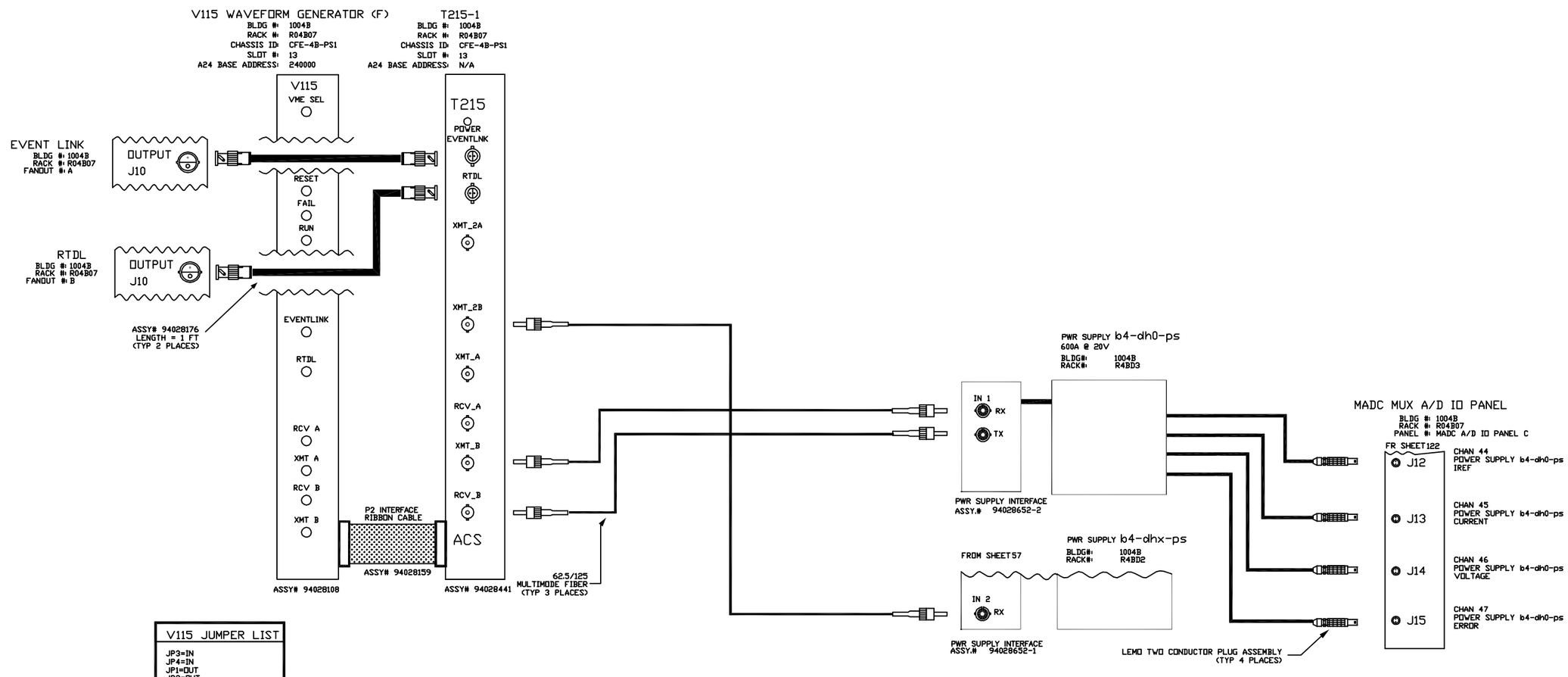

V115 JUMPER LIST
JP3=IN JP4=IN JP1=OUT JP2=OUT
A24 BASE ADDRESS JB1-A23=IN JB1-A22=IN JB1-A21=OUT JB1-A20=IN JB1-A19=IN JB1-A18=OUT

-3	-2	-1	REF DESIGNATOR	ITEM NO.	DESCRIPTION	MFG'L DWG NO.,SPEC. NO.
QTY REQD						

INTERPRET IN GENERAL ACCORDANCE WITH ASME Y14.24M-1989

UNLESS OTHERWISE SPECIFIED DIMENSIONS ARE IN INCHES

DECIMAL TOLERANCES
.X ±.030
.XX ±.015
.XXX ±.005
ANGULAR TOLERANCE
± .5°

NA FINISH

BREAK SHARP EDGES
MAX. XX MIN. XX

OUTSTANDING ECN

Q.A. CATEGORY A-3		DATE
DRAWN BY	Ed Koropsak	10/1/98
CHECKED BY		
DESIGN APPROVAL		
ENGINEER APPROVAL	R.MICHNOFF	10/1/98
SUPVR. APPROVAL		

NEXT ASSEMBLY

BROOKHAVEN NATIONAL LABORATORY
UPTON, N.Y. 11973

RHIC CONTROLS WIRING DIAGRAM

BLDG. 1004B, CFE-4B-PS1

b4-dh0-ps

SIZE D — DRAWING NUMBER 94028529 — REV. A

MATERIAL: ——— SCALE: NA WEIGHT: – SHEET 58

*AUTOCAD

REV.	ZONE	ECN NO.	DATE	BY	CKR	APP.

ACS, BNL 8/27/99 1:15 PM 8529_59.dwg

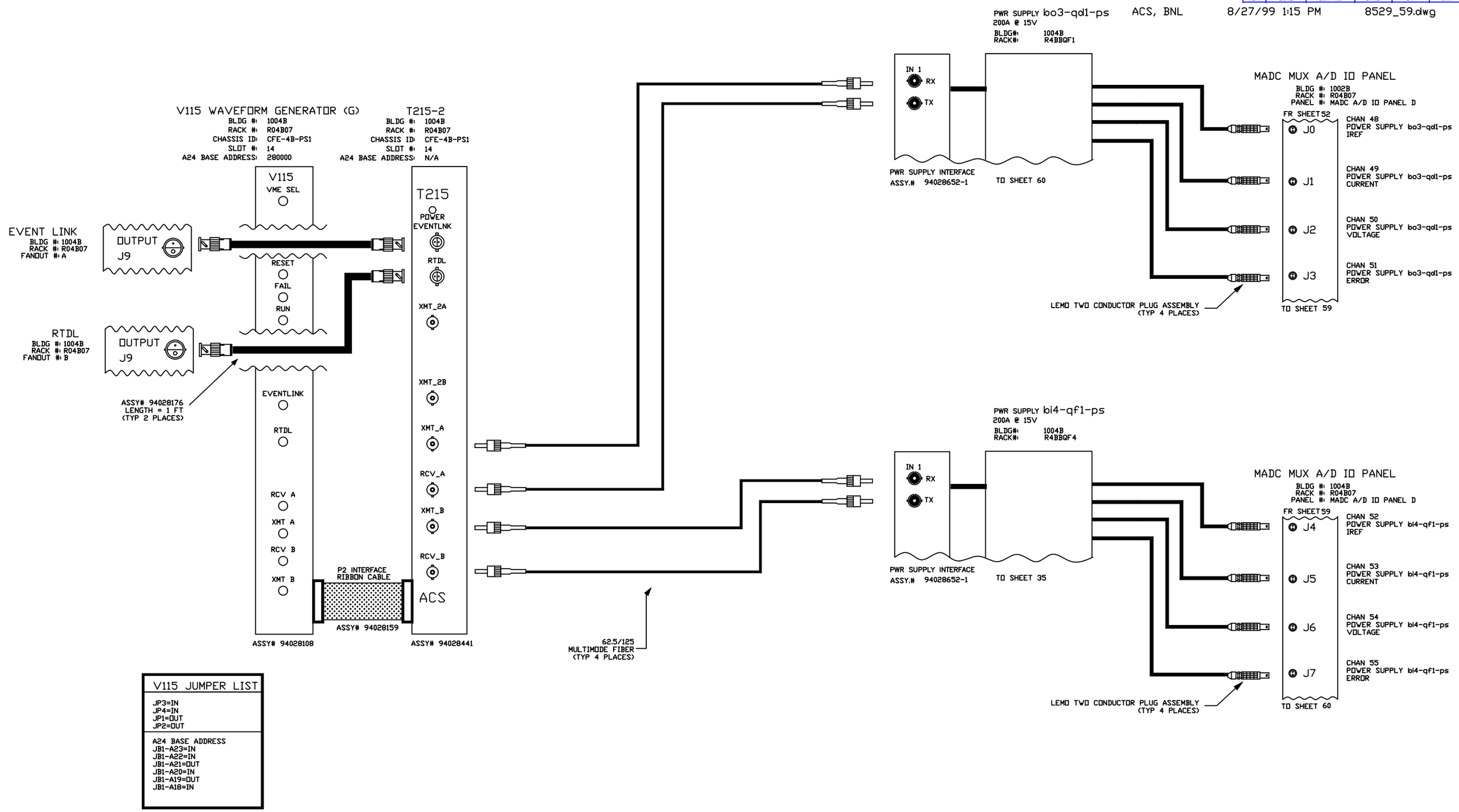

V115 JUMPER LIST

JP3=IN
JP4=IN
JP1=OUT
JP2=OUT

A24 BASE ADDRESS
JB1-A23=IN
JB1-A22=IN
JB1-A21=OUT
JB1-A20=IN
JB1-A19=OUT
JB1-A18=IN

-3	-2	-1	REF DESIGNATOR	ITEM NO.	DESCRIPTION	MAT'L DWG NO./BNL NO.
QTY REQD						

INTERPRET IN GENERAL ACCORDANCE WITH ASME Y14.24M-1989

UNLESS OTHERWISE SPECIFIED DIMENSIONS ARE IN INCHES

DECIMAL TOLERANCES
.X ±.030
.XX ±.015
.XXX ±.005
ANGULAR TOLERANCE
± .5°

NA FINISH

BREAK SHARP EDGES
MAX. XX MIN. XX

OUTSTANDING ECN

Q.A. CATEGORY A-3		DATE
DRAWN BY	Ed Koropsak	10/1/98
CHECKED BY		
DESIGN APPROVAL		
ENGINEER APPROVAL	R.MICHNOFF	10/1/98
SUPVR. APPROVAL		

NEXT ASSEMBLY

BROOKHAVEN NATIONAL LABORATORY
UPTON, N.Y. 11973

RHIC CONTROLS WIRING DIAGRAM
BLDG. 1004B, CFE-4B-PS1
bo3-qd1-ps/bi4-qf1-ps

SIZE D | 94028529 | REV. A
DRAWING NUMBER

MATERIAL: ——— SCALE: NA WEIGHT: – SHEET 59 OF x

1 *AUTOCAD

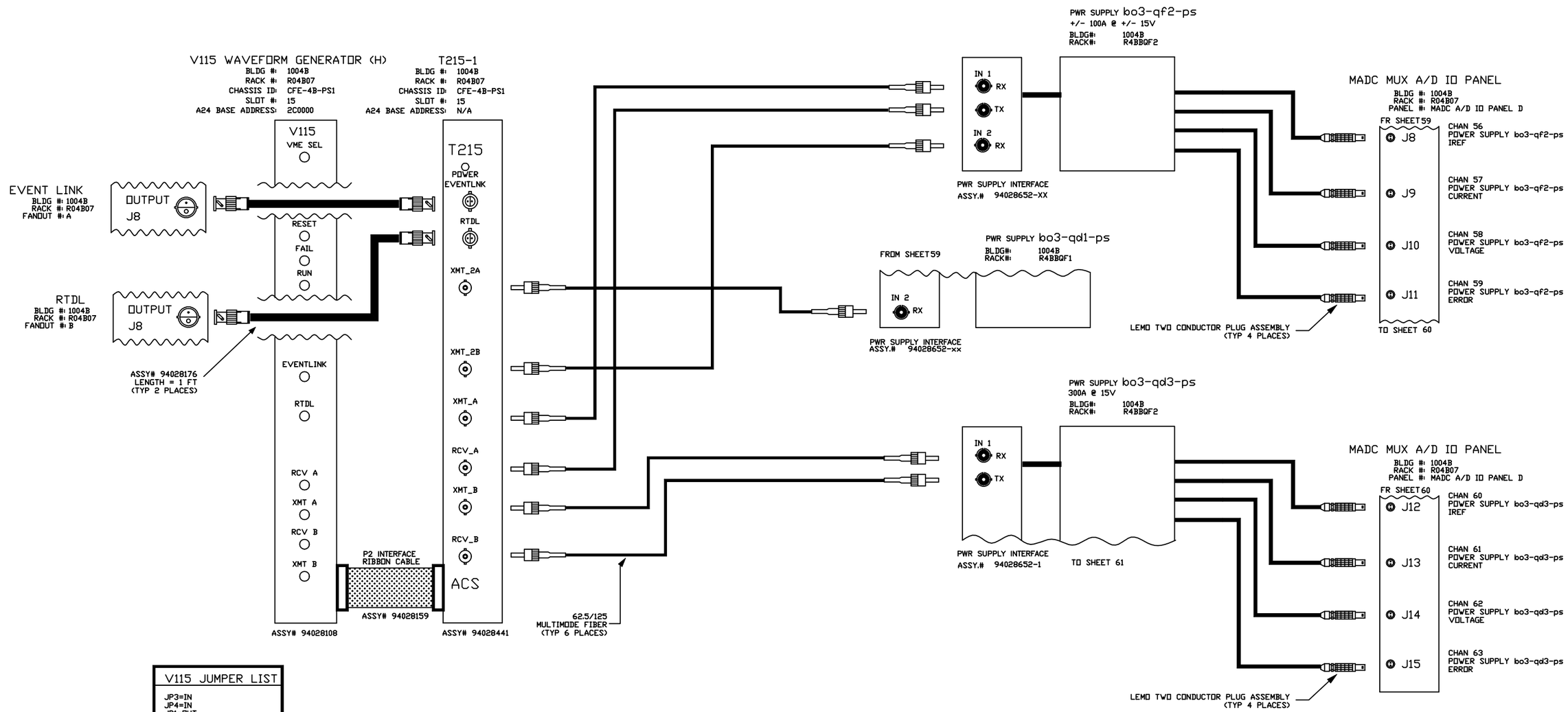

V115 JUMPER LIST
JP3=IN JP4=IN JP1=OUT JP2=OUT
A24 BASE ADDRESS JB1-A23=IN JB1-A22=IN JB1-A21=OUT JB1-A20=IN JB1-A19=OUT JB1-A18=OUT

REV.	ZONE	ECN NO.	DATE	BY	CKR	APP.

-3	-2	-1	REF DESIGNATOR	ITEM NO.	DESCRIPTION	MAT'L DWG NO./INL NO.
QTY REQD						

INTERPRET IN GENERAL ACCORDANCE WITH ASME Y14.24M-1989

UNLESS OTHERWISE SPECIFIED DIMENSIONS ARE IN INCHES

DECIMAL TOLERANCES
.X ±.030
.XX ±.015
.XXX ±.005
ANGULAR TOLERANCE
± .5°

NA FINISH

BREAK SHARP EDGES
MAX. XX MIN. XX

OUTSTANDING ECN

Q.A. CATEGORY A-3		DATE
DRAWN BY	Ed Koropsak	10/1/98
CHECKED BY		
DESIGN APPROVAL		
ENGINEER APPROVAL	R.MICHNOFF	10/1/98
SUPVR. APPROVAL		

NEXT ASSEMBLY

BROOKHAVEN NATIONAL LABORATORY
UPTON, N.Y. 11973

RHIC CONTROLS WIRING DIAGRAM

BLDG. 1004B, CFE-4B-PS1

bo3-qf2-ps/bo3-qd3-ps

SIZE D | DRAWING NUMBER 94028529 | REV. A

MATERIAL: ——— SCALE: NA WEIGHT: – SHEET 60 OF x

*AUTOCAD

REV.	ZONE	ECN NO.	DATE	BY	CKR	APP.

Controls, bnl 5/4/2004 11:34 AM 8529_66.dwg

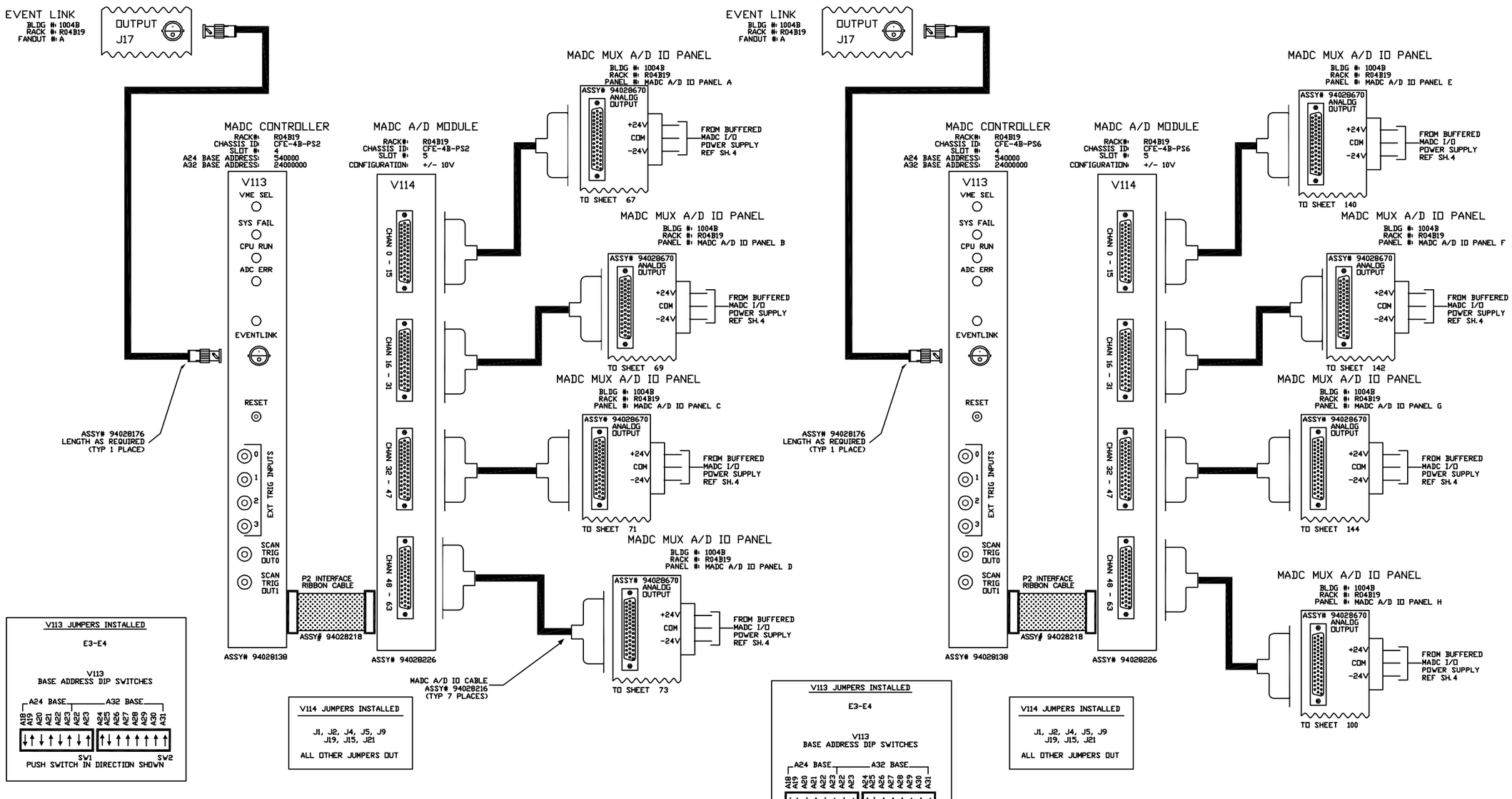

V113 JUMPERS INSTALLED

E3-E4

V113
BASE ADDRESS DIP SWITCHES

A24 BASE: A18 A19 A20 A21 A22 A23 A22 A23 — SW1
A32 BASE: A24 A25 A26 A27 A28 A29 A30 A31 — SW2

PUSH SWITCH IN DIRECTION SHOWN

V114 JUMPERS INSTALLED

J1, J2, J4, J5, J9
J19, J15, J21

ALL OTHER JUMPERS OUT

V113 JUMPERS INSTALLED

E3-E4

V113
BASE ADDRESS DIP SWITCHES

A24 BASE: A18 A19 A20 A21 A22 A23 A22 A23 — SW1
A32 BASE: A24 A25 A26 A27 A28 A29 A30 A31 — SW2

PUSH SWITCH IN DIRECTION SHOWN

V114 JUMPERS INSTALLED

J1, J2, J4, J5, J9
J19, J15, J21

ALL OTHER JUMPERS OUT

-3	-2	-1	REF DESIGNATOR	ITEM NO.	DESCRIPTION	MAT'L DWG NO./BNL NO.
QTY REQD						

INTERPRET IN GENERAL ACCORDANCE WITH ASME Y14.24M-1989

UNLESS OTHERWISE SPECIFIED DIMENSIONS ARE IN INCHES

DECIMAL TOLERANCES
.X ±.030
.XX ±.015
.XXX ±.005
ANGULAR TOLERANCE
± .5°

NA FINISH

BREAK SHARP EDGES
MAX. XX MIN. XX

OUTSTANDING ECN

Q.A. CATEGORY A-3		DATE
DRAWN BY	Ed Koropsak	10/8/98
CHECKED BY		
DESIGN APPROVAL		
ENGINEER APPROVAL	R. MICHNOFF	10/8/98
SUPVR. APPROVAL		

NEXT ASSEMBLY

BROOKHAVEN NATIONAL LABORATORY
UPTON, N.Y. 11973

RHIC CONTROLS WIRING DIAGRAM

1004B, VME CHASSIS CFE-4B-PS2/PS6

MADC SYSTEM

SIZE D — DRAWING NUMBER 94028529 — REV. A

MATERIAL: ——— SCALE: FULL WEIGHT: – SHEET 66

*AUTOCAD

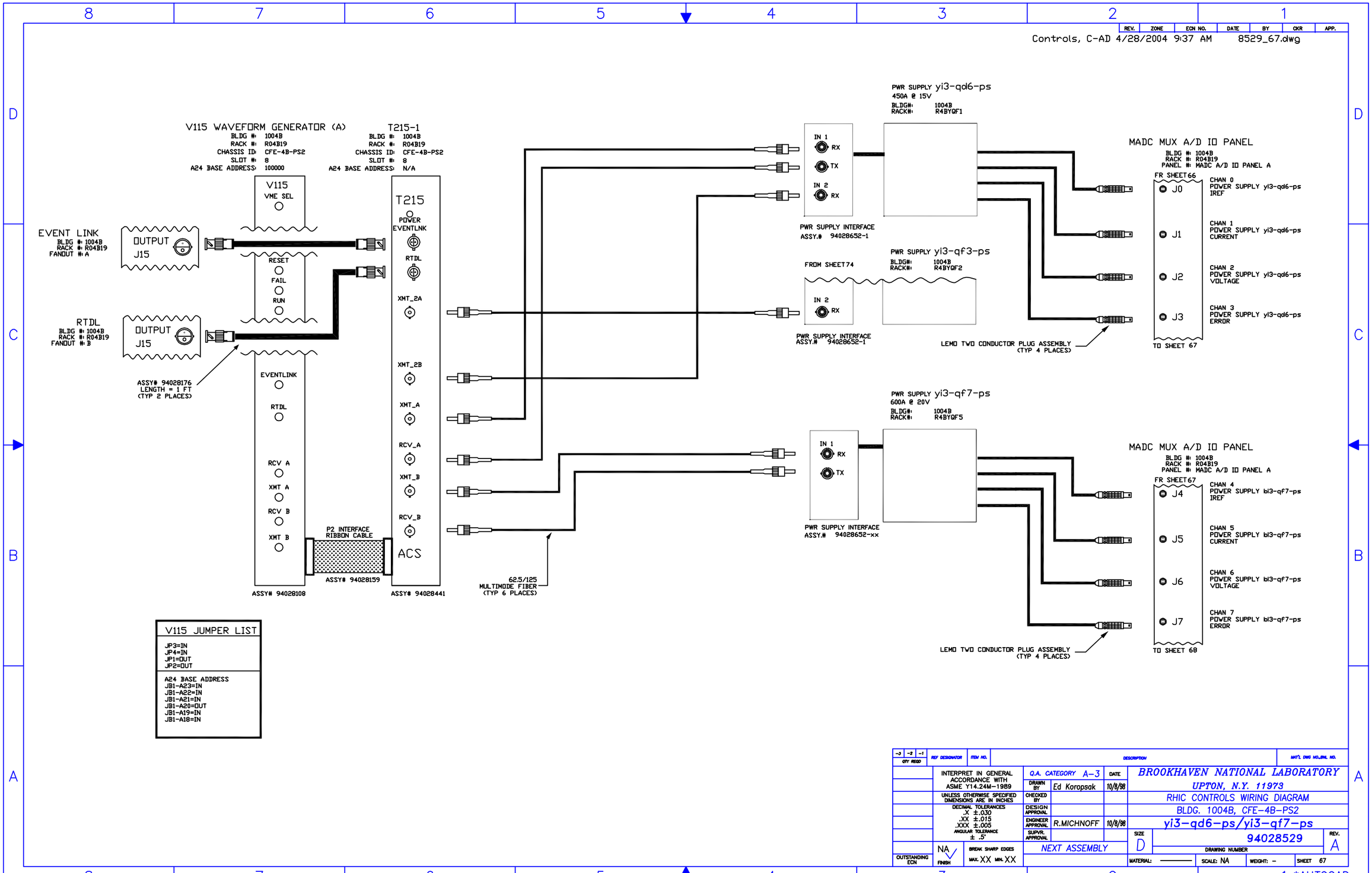

Controls, C-AD 4/28/2004 9:37 AM 8529_67.dwg
V115 WAVEFORM GENERATOR (A)
BLDG #: 1004B
RACK #: R04B19
CHASSIS ID: CFE-4B-PS2
SLOT #: 8
A24 BASE ADDRESS: 100000
T215-1
BLDG #: 1004B
RACK #: R04B19
CHASSIS ID: CFE-4B-PS2
SLOT #: 8
A24 BASE ADDRESS: N/A
V115
VME SEL
RESET
FAIL
RUN
EVENTLINK
RTDL
RCV A
XMT A
RCV B
XMT B
T215
POWER
EVENTLNK
RTDL
XMT_2A
XMT_2B
XMT_A
RCV_A
XMT_B
RCV_B
ACS
EVENT LINK
BLDG #: 1004B
RACK #: R04B19
FANOUT #: A
OUTPUT
J15
RTDL
BLDG #: 1004B
RACK #: R04B19
FANOUT #: B
OUTPUT
J15
ASSY# 94028176
LENGTH = 1 FT
(TYP 2 PLACES)
P2 INTERFACE
RIBBON CABLE
ASSY# 94028159
ASSY# 94028108
ASSY# 94028441
62.5/125
MULTIMODE FIBER
(TYP 6 PLACES)
PWR SUPPLY yi3-qd6-ps
450A @ 15V
BLDG#: 1004B
RACK#: R4BYQF1
IN 1
RX
TX
IN 2
RX
PWR SUPPLY INTERFACE
ASSY.# 94028652-1
PWR SUPPLY yi3-qf3-ps
BLDG#: 1004B
RACK#: R4BYQF2
FROM SHEET74
IN 2
RX
PWR SUPPLY INTERFACE
ASSY.# 94028652-1
LEMO TWO CONDUCTOR PLUG ASSEMBLY
(TYP 4 PLACES)
MADC MUX A/D IO PANEL
BLDG #: 1004B
RACK #: R04B19
PANEL #: MADC A/D IO PANEL A
FR SHEET66
J0
CHAN 0
POWER SUPPLY yi3-qd6-ps
IREF
J1
CHAN 1
POWER SUPPLY yi3-qd6-ps
CURRENT
J2
CHAN 2
POWER SUPPLY yi3-qd6-ps
VOLTAGE
J3
CHAN 3
POWER SUPPLY yi3-qd6-ps
ERROR
TO SHEET 67
PWR SUPPLY yi3-qf7-ps
600A @ 20V
BLDG#: 1004B
RACK#: R4BYQF5
IN 1
RX
TX
PWR SUPPLY INTERFACE
ASSY.# 94028652-xx
LEMO TWO CONDUCTOR PLUG ASSEMBLY
(TYP 4 PLACES)
MADC MUX A/D IO PANEL
BLDG #: 1004B
RACK #: R04B19
PANEL #: MADC A/D IO PANEL A
FR SHEET67
J4
CHAN 4
POWER SUPPLY bi3-qf7-ps
IREF
J5
CHAN 5
POWER SUPPLY bi3-qf7-ps
CURRENT
J6
CHAN 6
POWER SUPPLY bi3-qf7-ps
VOLTAGE
J7
CHAN 7
POWER SUPPLY bi3-qf7-ps
ERROR
TO SHEET 68
V115 JUMPER LIST
JP3=IN
JP4=IN
JP1=OUT
JP2=OUT
A24 BASE ADDRESS
JB1-A23=IN
JB1-A22=IN
JB1-A21=IN
JB1-A20=OUT
JB1-A19=IN
JB1-A18=IN
REV. ZONE ECN NO. DATE BY CKR APP.
-3 -2 -1 QTY REQD
REF DESIGNATOR
ITEM NO.
DESCRIPTION
MAT'L DWG NO./BNL NO.
INTERPRET IN GENERAL ACCORDANCE WITH ASME Y14.24M-1989
UNLESS OTHERWISE SPECIFIED DIMENSIONS ARE IN INCHES
DECIMAL TOLERANCES
.X ±.030
.XX ±.015
.XXX ±.005
ANGULAR TOLERANCE ± .5°
OUTSTANDING ECN
NA
FINISH
BREAK SHARP EDGES
MAX. XX MIN. XX
Q.A. CATEGORY A-3
DATE
DRAWN BY Ed Koropsak 10/8/98
CHECKED BY
DESIGN APPROVAL
ENGINEER APPROVAL R.MICHNOFF 10/8/98
SUPVR. APPROVAL
NEXT ASSEMBLY
BROOKHAVEN NATIONAL LABORATORY
UPTON, N.Y. 11973
RHIC CONTROLS WIRING DIAGRAM
BLDG. 1004B, CFE-4B-PS2
yi3-qd6-ps/yi3-qf7-ps
SIZE D
94028529
REV. A
DRAWING NUMBER
MATERIAL:
SCALE: NA
WEIGHT: -
SHEET 67
*AUTOCAD

Controls, C-AD 4/28/2004 9:44 AM 8529_68.dwg

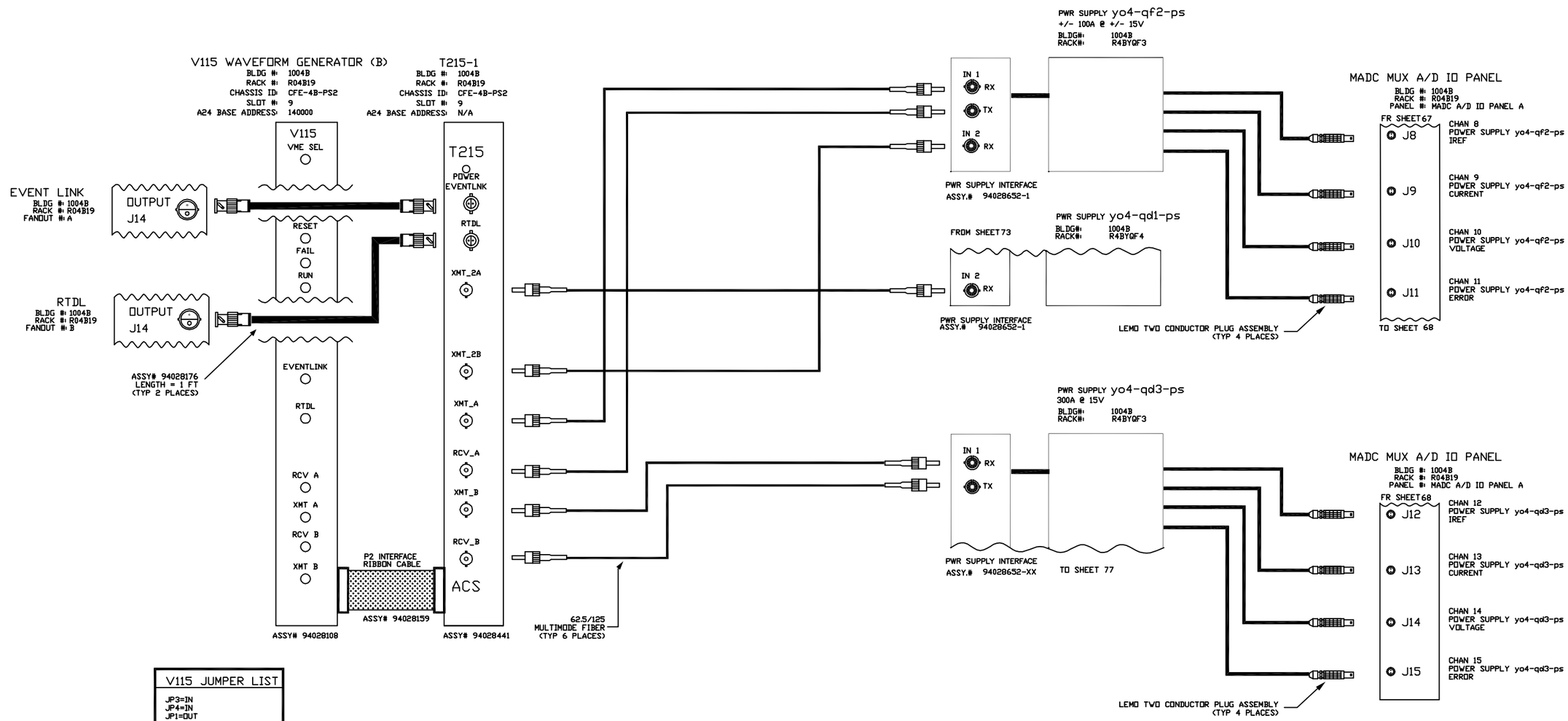

V115 JUMPER LIST
JP3=IN JP4=IN JP1=OUT JP2=OUT
A24 BASE ADDRESS JB1-A23=IN JB1-A22=IN JB1-A21=IN JB1-A20=OUT JB1-A19=IN JB1-A18=OUT

-3	-2	-1	REF DESIGNATOR	ITEM NO.	DESCRIPTION	MAT'L DWG NO./BNL NO.
QTY REQD						

INTERPRET IN GENERAL ACCORDANCE WITH ASME Y14.24M-1989

UNLESS OTHERWISE SPECIFIED DIMENSIONS ARE IN INCHES

DECIMAL TOLERANCES
.X ±.030
.XX ±.015
.XXX ±.005
ANGULAR TOLERANCE
± .5°

OUTSTANDING ECN

NA FINISH

BREAK SHARP EDGES
MAX. XX MIN. XX

Q.A. CATEGORY A-3

		DATE
DRAWN BY	Ed Koropsak	10/8/98
CHECKED BY		
DESIGN APPROVAL		
ENGINEER APPROVAL	R.MICHNOFF	10/8/98
SUPVR. APPROVAL		

NEXT ASSEMBLY

BROOKHAVEN NATIONAL LABORATORY
UPTON, N.Y. 11973

RHIC CONTROLS WIRING DIAGRAM

BLDG. 1004B, CFE-4B-PS2

yo4-qf2-ps/yo4-qd3-ps

SIZE D | DRAWING NUMBER 94028529 | REV. A

MATERIAL: ——— SCALE: NA WEIGHT: – SHEET 68

*AUTOCAD

REV.	ZONE	ECN NO.	DATE	BY	CKR	APP.

Controls, C-AD 4/28/2004 9:53 AM 8529_69.dwg

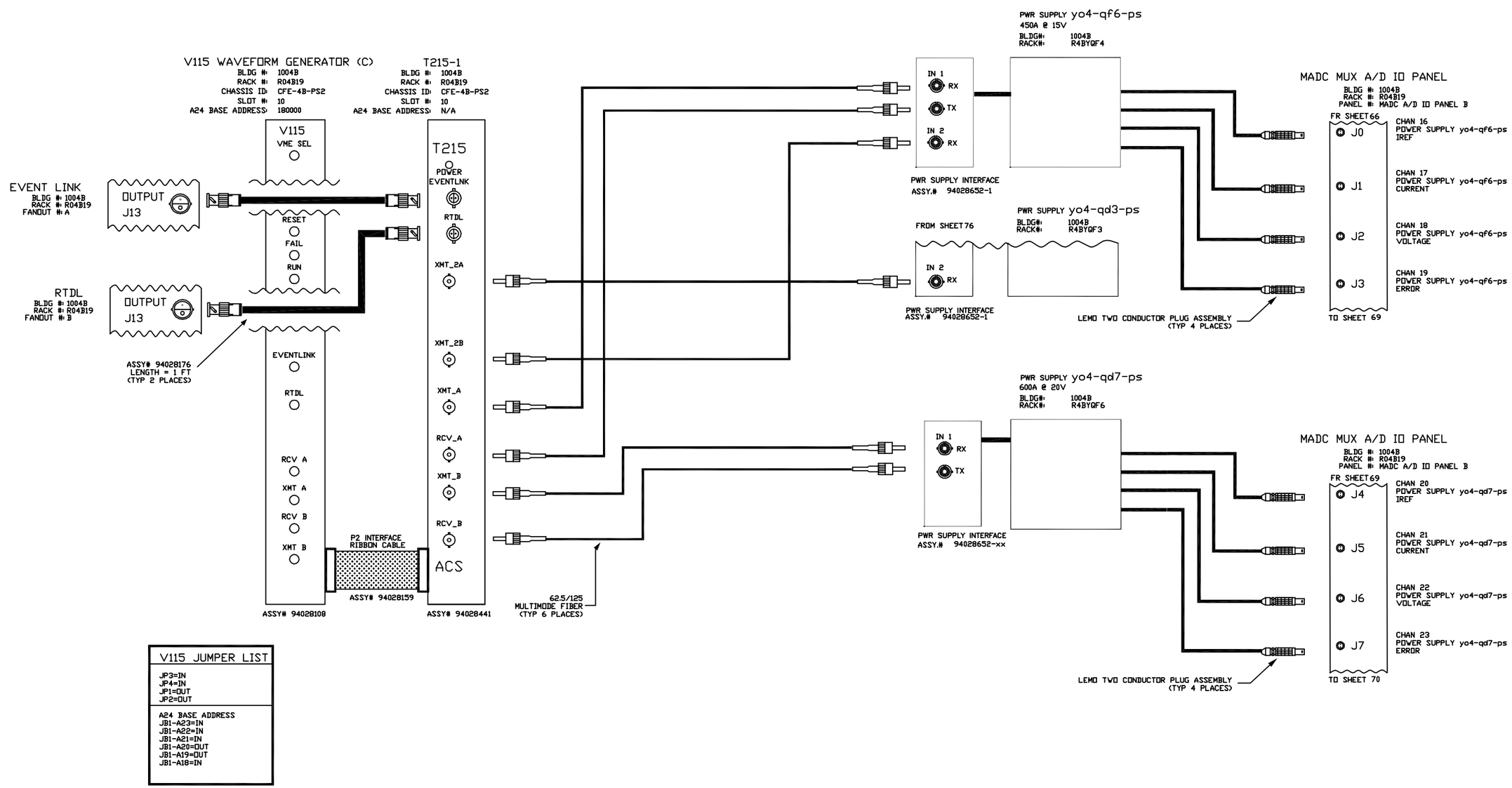

V115 JUMPER LIST
JP3=IN JP4=IN JP1=OUT JP2=OUT
A24 BASE ADDRESS JB1-A23=IN JB1-A22=IN JB1-A21=IN JB1-A20=OUT JB1-A19=OUT JB1-A18=IN

-3	-2	-1	REF DESIGNATOR	ITEM NO.	DESCRIPTION	MAT'L DWG NO./BNL NO.
QTY REQD						

INTERPRET IN GENERAL ACCORDANCE WITH ASME Y14.24M-1989

UNLESS OTHERWISE SPECIFIED DIMENSIONS ARE IN INCHES

DECIMAL TOLERANCES
.X ±.030
.XX ±.015
.XXX ±.005
ANGULAR TOLERANCE ± .5°

OUTSTANDING ECN

NA FINISH

BREAK SHARP EDGES
MAX. XX MIN. XX

Q.A. CATEGORY A-3

		DATE
DRAWN BY	Ed Koropsak	10/8/98
CHECKED BY		
DESIGN APPROVAL		
ENGINEER APPROVAL	R.MICHNOFF	10/8/98
SUPVR. APPROVAL		

NEXT ASSEMBLY

BROOKHAVEN NATIONAL LABORATORY
UPTON, N.Y. 11973

RHIC CONTROLS WIRING DIAGRAM

BLDG. 1004B, CFE-4B-PS2

yo4-qf6-ps/yo4-qd7-ps

SIZE D

94028529

DRAWING NUMBER

REV. A

MATERIAL: ——— SCALE: NA WEIGHT: – SHEET 69

1 *AUTOCAD

ACS, BNL 8/27/99 1:29 PM 8529_70.dwg

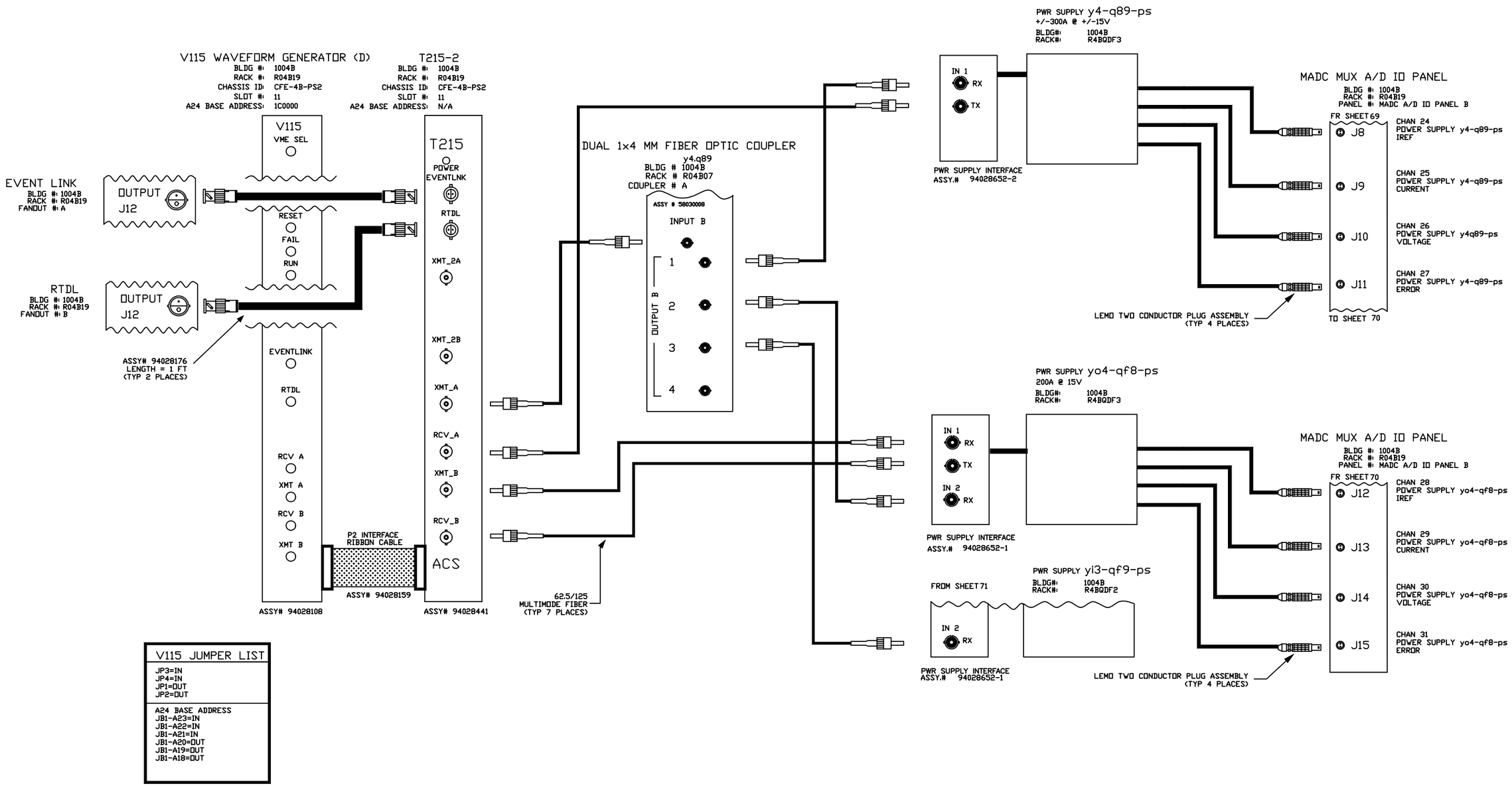

V115 JUMPER LIST
JP3=IN JP4=IN JP1=OUT JP2=OUT
A24 BASE ADDRESS JB1-A23=IN JB1-A22=IN JB1-A21=IN JB1-A20=OUT JB1-A19=OUT JB1-A18=OUT

-3	-2	-1	REF DESIGNATOR	ITEM NO.	DESCRIPTION	MAT'L. DWG NO./BNL NO.
QTY REQD						

INTERPRET IN GENERAL ACCORDANCE WITH ASME Y14.24M-1989

UNLESS OTHERWISE SPECIFIED DIMENSIONS ARE IN INCHES
DECIMAL TOLERANCES
.X ±.030
.XX ±.015
.XXX ±.005
ANGULAR TOLERANCE ± .5°

NA FINISH — BREAK SHARP EDGES MAX. XX MIN. XX

OUTSTANDING ECN

Q.A. CATEGORY A-3		DATE
DRAWN BY	Ed Koropsak	10/8/98
CHECKED BY		
DESIGN APPROVAL		
ENGINEER APPROVAL	R.MICHNOFF	10/8/98
SUPVR. APPROVAL		
NEXT ASSEMBLY		

BROOKHAVEN NATIONAL LABORATORY
UPTON, N.Y. 11973

RHIC CONTROLS WIRING DIAGRAM
BLDG. 1004B, CFE-4B-PS2
y4-q89-ps/yo4-qf8-ps

SIZE D — 94028529 — REV. A
DRAWING NUMBER

MATERIAL: ——— SCALE: NA WEIGHT: – SHEET 70 OF x

*AUTOCAD

REV.	ZONE	ECN NO.	DATE	BY	CKR	APP.

ACS, BNL 8/27/99 1:30 PM 8529_71.dwg

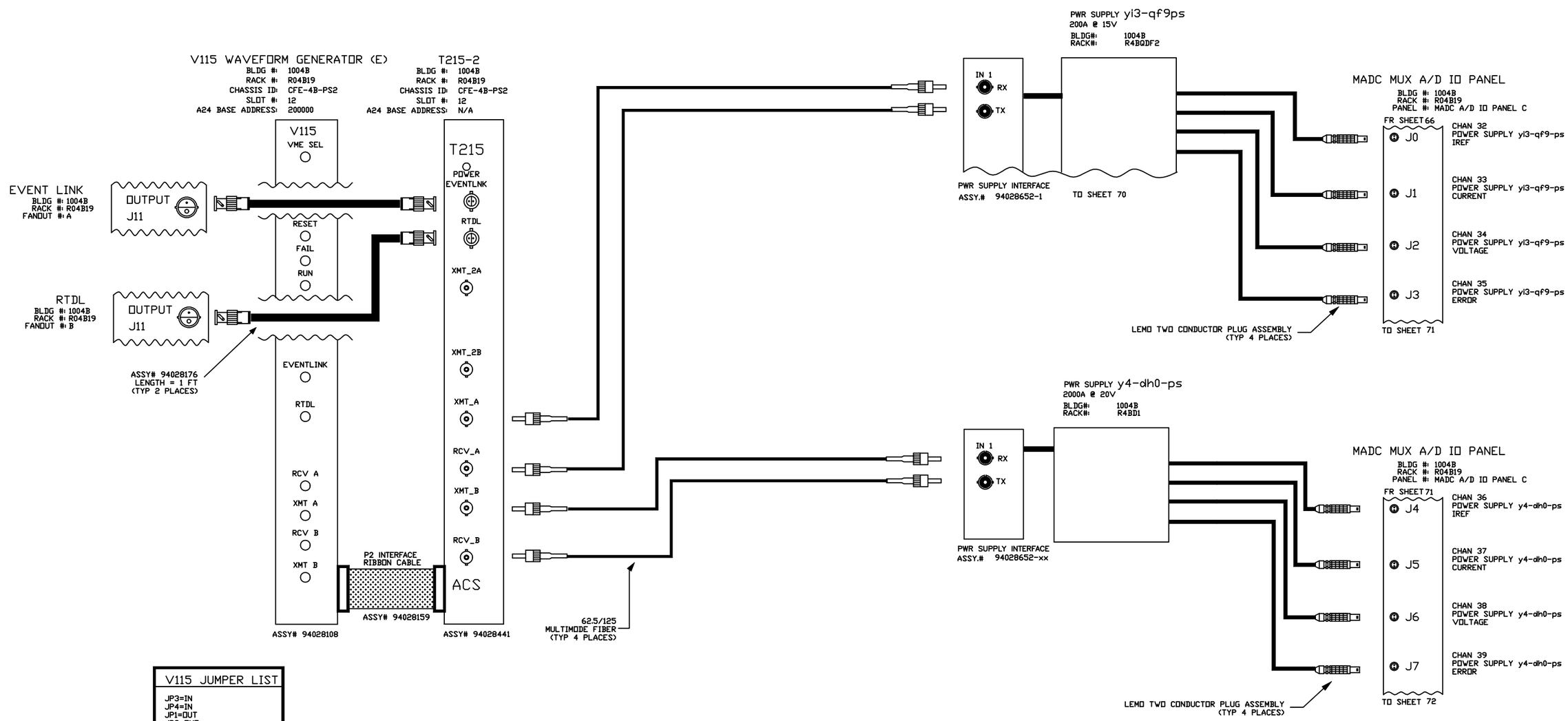

V115 JUMPER LIST
JP3=IN JP4=IN JP1=OUT JP2=OUT
A24 BASE ADDRESS JB1-A23=IN JB1-A22=IN JB1-A21=OUT JB1-A20=IN JB1-A19=IN JB1-A18=IN

-3	-2	-1	REF DESIGNATOR	ITEM NO.	DESCRIPTION	MAT'L DWG NO./BNL NO.
QTY REQD						

INTERPRET IN GENERAL ACCORDANCE WITH ASME Y14.24M-1989	Q.A. CATEGORY A-3	DATE	BROOKHAVEN NATIONAL LABORATORY UPTON, N.Y. 11973
UNLESS OTHERWISE SPECIFIED DIMENSIONS ARE IN INCHES	DRAWN BY Ed Koropsak	10/8/98	RHIC CONTROLS WIRING DIAGRAM
DECIMAL TOLERANCES X ±.030 .XX ±.015 .XXX ±.005 ANGULAR TOLERANCE ± .5°	CHECKED BY		BLDG. 1004B, CFE-4B-PS2
	DESIGN APPROVAL		yi3-qf9-ps/y4-dh0-ps
	ENGINEER APPROVAL R.MICHNOFF	10/8/98	
	SUPVR. APPROVAL		SIZE D — 94028529 — REV. A
NA FINISH	BREAK SHARP EDGES MAX. XX MIN. XX	NEXT ASSEMBLY	DRAWING NUMBER
OUTSTANDING ECN			MATERIAL: ——— SCALE: NA WEIGHT: – SHEET 71 OF x

*AUTOCAD

Controls, C-AD 4/28/2004 9:29 AM 8529_72.dwg

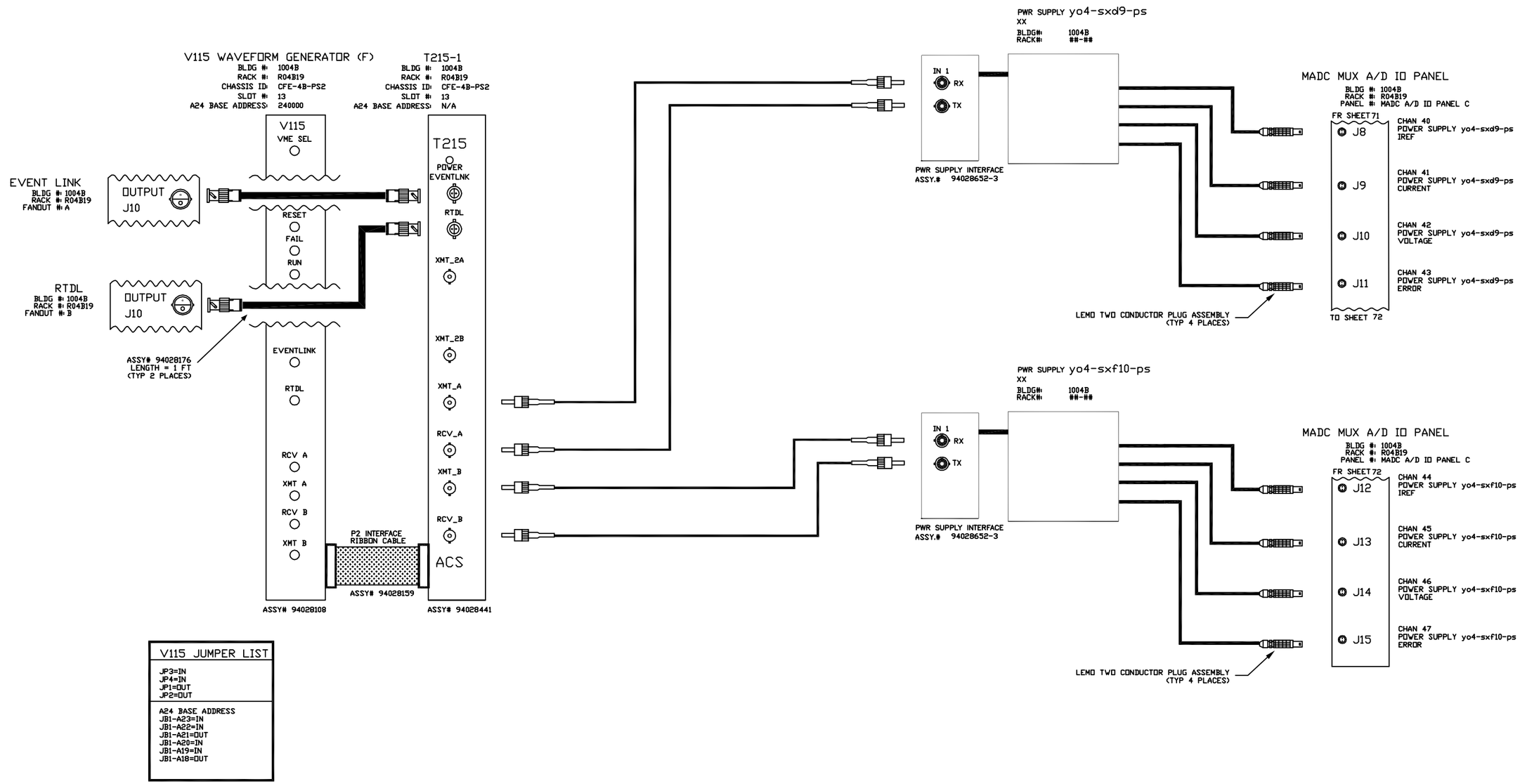

V115 JUMPER LIST
JP3=IN JP4=IN JP1=OUT JP2=OUT
A24 BASE ADDRESS JB1-A23=IN JB1-A22=IN JB1-A21=OUT JB1-A20=IN JB1-A19=IN JB1-A18=OUT

REV.	ZONE	ECN NO.	DATE	BY	CKR	APP.

-3	-2	-1	REF DESIGNATOR	ITEM NO.	DESCRIPTION	MAT'L DWG NO./BNL NO.
QTY REQD						

INTERPRET IN GENERAL ACCORDANCE WITH ASME Y14.24M-1989

UNLESS OTHERWISE SPECIFIED DIMENSIONS ARE IN INCHES

DECIMAL TOLERANCES
.X ±.030
.XX ±.015
.XXX ±.005
ANGULAR TOLERANCE ± .5°

OUTSTANDING ECN

NA FINISH

BREAK SHARP EDGES MAX. XX MIN. XX

Q.A. CATEGORY A-3		DATE
DRAWN BY	Ed Koropsak	10/8/98
CHECKED BY		
DESIGN APPROVAL		
ENGINEER APPROVAL	R.MICHNOFF	10/8/98
SUPVR. APPROVAL		

NEXT ASSEMBLY

BROOKHAVEN NATIONAL LABORATORY
UPTON, N.Y. 11973

RHIC CONTROLS WIRING DIAGRAM
BLDG. 1004B, CFE-4B-PS2
yo4-sxd9-ps/yo4-sxf10-ps

SIZE D | DRAWING NUMBER 94028529 | REV. A

MATERIAL: ——— SCALE: NA WEIGHT: – SHEET 72

*AUTOCAD

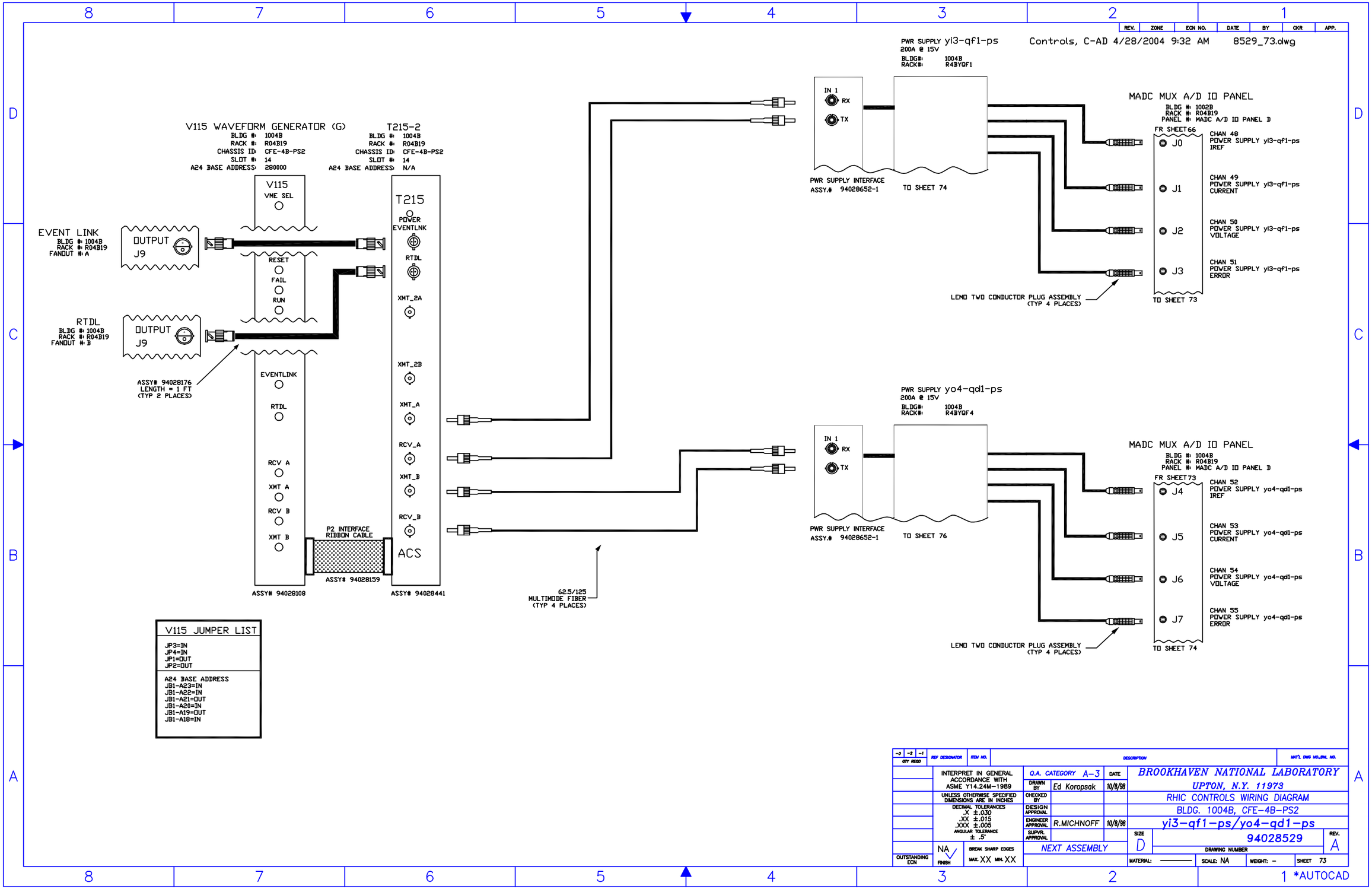

Controls, C-AD 4/28/2004 9:32 AM 8529_73.dwg
V115 WAVEFORM GENERATOR (G)
BLDG #: 1004B
RACK #: R04B19
CHASSIS ID: CFE-4B-PS2
SLOT #: 14
A24 BASE ADDRESS: 280000
T215-2
BLDG #: 1004B
RACK #: R04B19
CHASSIS ID: CFE-4B-PS2
SLOT #: 14
A24 BASE ADDRESS: N/A
V115
VME SEL
RESET
FAIL
RUN
EVENTLINK
RTDL
RCV A
XMT A
RCV B
XMT B
T215
POWER
EVENTLNK
RTDL
XMT_2A
XMT_2B
XMT_A
RCV_A
XMT_B
RCV_B
ACS
EVENT LINK
BLDG #: 1004B
RACK #: R04B19
FANOUT #: A
OUTPUT
J9
RTDL
BLDG #: 1004B
RACK #: R04B19
FANOUT #: B
OUTPUT
J9
ASSY# 94028176
LENGTH = 1 FT
(TYP 2 PLACES)
P2 INTERFACE
RIBBON CABLE
ASSY# 94028159
ASSY# 94028108
ASSY# 94028441
62.5/125
MULTIMODE FIBER
(TYP 4 PLACES)
PWR SUPPLY yi3-qf1-ps
200A @ 15V
BLDG#: 1004B
RACK#: R4BYQF1
IN 1
RX
TX
PWR SUPPLY INTERFACE
ASSY.# 94028652-1
TO SHEET 74
MADC MUX A/D IO PANEL
BLDG #: 1002B
RACK #: R04B19
PANEL #: MADC A/D IO PANEL D
FR SHEET66
J0
CHAN 48
POWER SUPPLY yi3-qf1-ps
IREF
J1
CHAN 49
POWER SUPPLY yi3-qf1-ps
CURRENT
J2
CHAN 50
POWER SUPPLY yi3-qf1-ps
VOLTAGE
J3
CHAN 51
POWER SUPPLY yi3-qf1-ps
ERROR
TO SHEET 73
LEMO TWO CONDUCTOR PLUG ASSEMBLY
(TYP 4 PLACES)
PWR SUPPLY yo4-qd1-ps
200A @ 15V
BLDG#: 1004B
RACK#: R4BYQF4
IN 1
RX
TX
PWR SUPPLY INTERFACE
ASSY.# 94028652-1
TO SHEET 76
MADC MUX A/D IO PANEL
BLDG #: 1004B
RACK #: R04B19
PANEL #: MADC A/D IO PANEL D
FR SHEET73
J4
CHAN 52
POWER SUPPLY yo4-qd1-ps
IREF
J5
CHAN 53
POWER SUPPLY yo4-qd1-ps
CURRENT
J6
CHAN 54
POWER SUPPLY yo4-qd1-ps
VOLTAGE
J7
CHAN 55
POWER SUPPLY yo4-qd1-ps
ERROR
TO SHEET 74
LEMO TWO CONDUCTOR PLUG ASSEMBLY
(TYP 4 PLACES)
V115 JUMPER LIST
JP3=IN
JP4=IN
JP1=OUT
JP2=OUT
A24 BASE ADDRESS
JB1-A23=IN
JB1-A22=IN
JB1-A21=OUT
JB1-A20=IN
JB1-A19=OUT
JB1-A18=IN
REV. ZONE ECN NO. DATE BY CKR APP.
-3 -2 -1 QTY REQD
REF DESIGNATOR
ITEM NO.
DESCRIPTION
MAT'L DWG NO./BNL NO.
INTERPRET IN GENERAL ACCORDANCE WITH ASME Y14.24M-1989
UNLESS OTHERWISE SPECIFIED DIMENSIONS ARE IN INCHES
DECIMAL TOLERANCES
.X ±.030
.XX ±.015
.XXX ±.005
ANGULAR TOLERANCE
± .5°
OUTSTANDING ECN
NA
FINISH
BREAK SHARP EDGES
MAX. XX MIN. XX
Q.A. CATEGORY A-3
DATE
DRAWN BY Ed Koropsak 10/8/98
CHECKED BY
DESIGN APPROVAL
ENGINEER APPROVAL R.MICHNOFF 10/8/98
SUPVR. APPROVAL
NEXT ASSEMBLY
BROOKHAVEN NATIONAL LABORATORY
UPTON, N.Y. 11973
RHIC CONTROLS WIRING DIAGRAM
BLDG. 1004B, CFE-4B-PS2
yi3-qf1-ps/yo4-qd1-ps
SIZE D
94028529
REV. A
DRAWING NUMBER
MATERIAL:
SCALE: NA
WEIGHT: -
SHEET 73
*AUTOCAD

REV.	ZONE	ECN NO.	DATE	BY	CKR	APP.

ACS, BNL 8/27/99 1:32 PM 8529_74.dwg

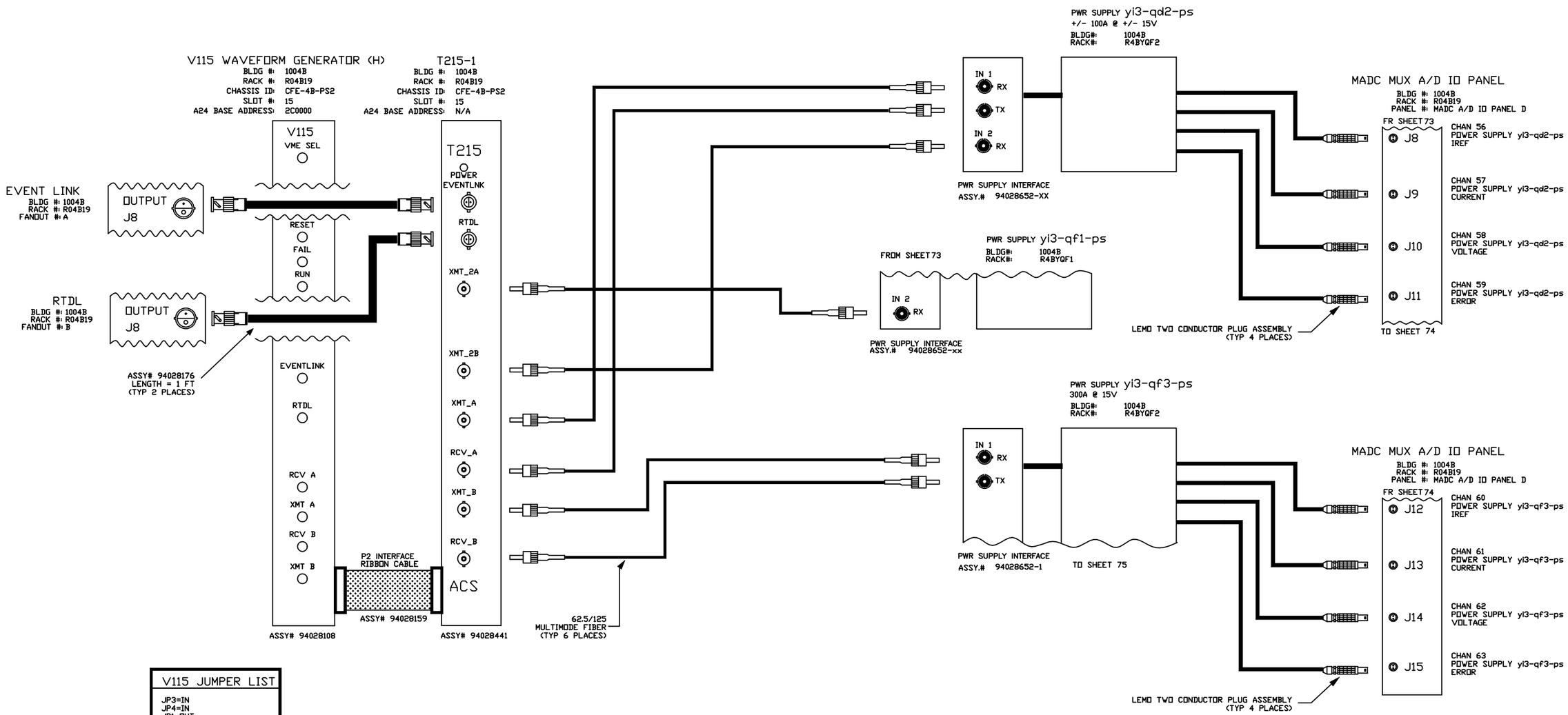

V115 JUMPER LIST
JP3=IN JP4=IN JP1=OUT JP2=OUT
A24 BASE ADDRESS JB1-A23=IN JB1-A22=IN JB1-A21=OUT JB1-A20=IN JB1-A19=OUT JB1-A18=OUT

-3	-2	-1	REF DESIGNATOR	ITEM NO.	DESCRIPTION	MAT'L DWG NO./INL NO.
QTY REQD						

INTERPRET IN GENERAL ACCORDANCE WITH ASME Y14.24M-1989

UNLESS OTHERWISE SPECIFIED DIMENSIONS ARE IN INCHES

DECIMAL TOLERANCES
.X ±.030
.XX ±.015
.XXX ±.005
ANGULAR TOLERANCE
± .5°

NA FINISH

BREAK SHARP EDGES
MAX. XX MIN. XX

OUTSTANDING ECN

Q.A. CATEGORY A-3		DATE
DRAWN BY	Ed Koropsak	10/8/98
CHECKED BY		
DESIGN APPROVAL		
ENGINEER APPROVAL	R.MICHNOFF	10/8/98
SUPVR. APPROVAL		

NEXT ASSEMBLY

BROOKHAVEN NATIONAL LABORATORY
UPTON, N.Y. 11973

RHIC CONTROLS WIRING DIAGRAM

BLDG. 1004B, CFE-4B-PS2

yi3-qd2-ps/yi3-qf3-ps

SIZE D | DRAWING NUMBER 94028529 | REV. A

MATERIAL: ——— SCALE: NA WEIGHT: – SHEET 74 OF x

*AUTOCAD

REV.	ZONE	ECN NO.	DATE	BY	CKR	APP.

EVENT INPUT MODULE (0)

BLDG #: 1004B
RACK #: R4B04
CHASSIS ID: CFE-4B-EVT
SLOT #: 6
A16 BASE ADDRESS: NA

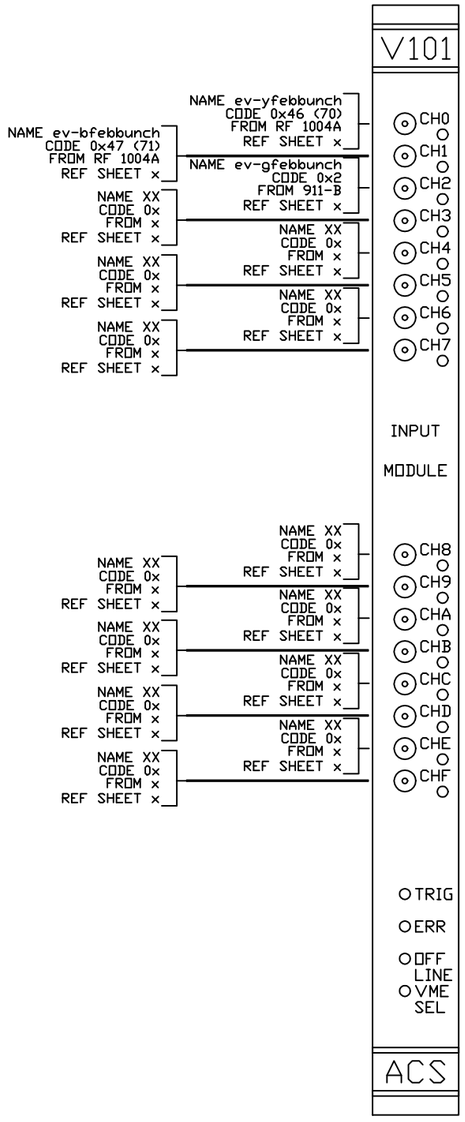

EVENT INPUT MODULE (1)

BLDG #: 1004B
RACK #: R4B04
CHASSIS ID: CFE-4B-EVT
SLOT #: 7
A16 BASE ADDRESS: NA

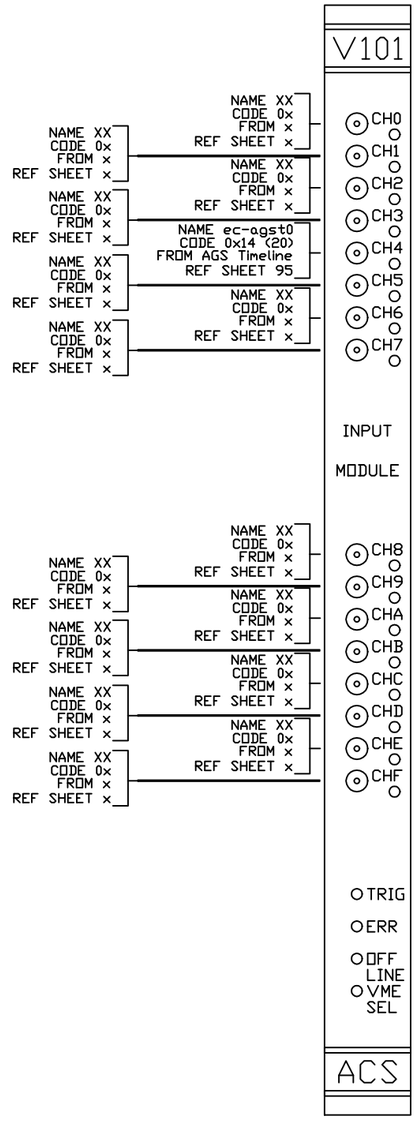

EVENT INPUT MODULE (2)

BLDG #: 1004B
RACK #: R4B04
CHASSIS ID: CFE-4B-EVT
SLOT #: 8
A16 BASE ADDRESS: NA

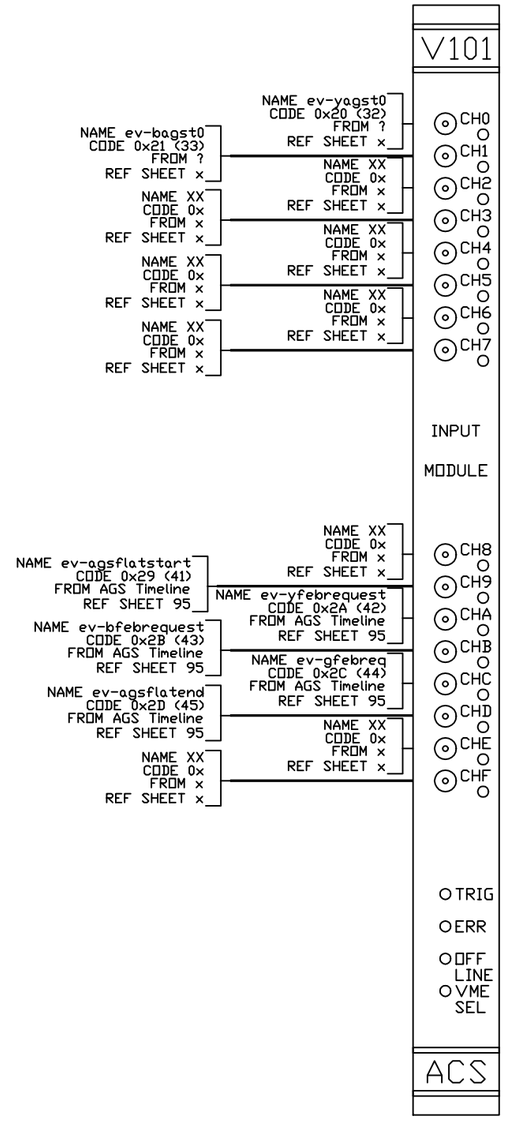

EVENT INPUT MODULE (3)

BLDG #: 1004B
RACK #: R4B04
CHASSIS ID: CFE-4B-EVT
SLOT #: 9
A16 BASE ADDRESS: NA

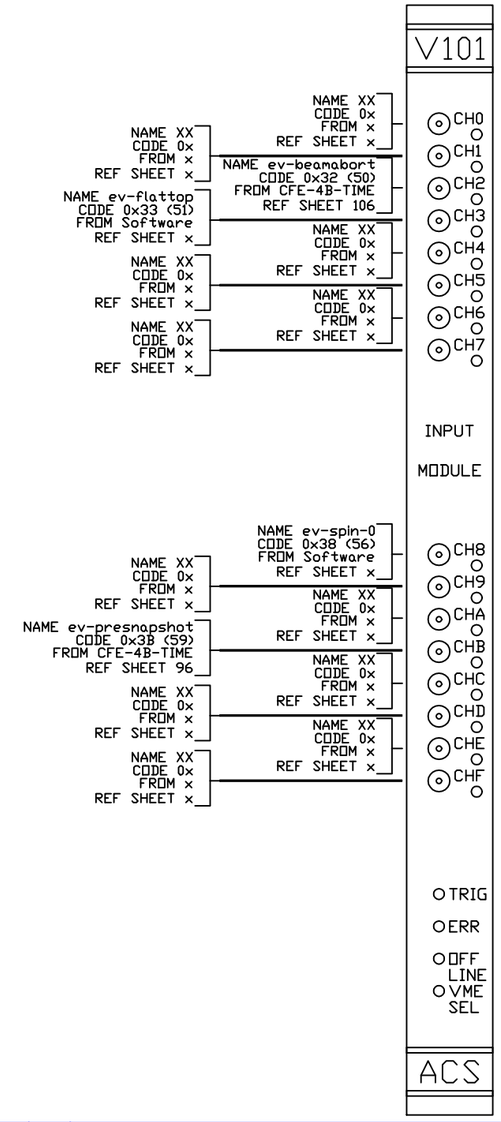

-3	-2	-1	REF DESIGNATOR	ITEM NO.	DESCRIPTION	MAT'L DWG NO.,BNL NO.
QTY REQD						

INTERPRET IN GENERAL ACCORDANCE WITH ASME Y14.24M-1989

UNLESS OTHERWISE SPECIFIED DIMENSIONS ARE IN INCHES
DECIMAL TOLERANCES .X ±.030 .XX ±.015 .XXX ±.005
ANGULAR TOLERANCE ± .5°

OUTSTANDING ECN: NA
FINISH: √
BREAK SHARP EDGES MAX. XX MIN. XX

Q.A. CATEGORY A-3	DATE	
DRAWN BY Ed Koropsak	10/9/98	
CHECKED BY		
DESIGN APPROVAL		
ENGINEER APPROVAL R. MICHNOFF	10/9/98	
SUPVR. APPROVAL		
NEXT ASSEMBLY		

BROOKHAVEN NATIONAL LABORATORY
UPTON, N.Y. 11973

RHIC CONTROLS WIRING DIAGRAM
SERVICE BLDG 1004B
EVENT LINK INPUTS

SIZE D | DRAWING NUMBER 94028529 | REV. A

MATERIAL: ——— SCALE: NA WEIGHT: – SHEET 80

BNL 10/22/01 1:20 PM 8529_80.dwg

*AUTOCAD

REV.	ZONE	ECN NO.	DATE	BY	CKR	APP.

EVENT INPUT MODULE (4)

BLDG #: 1004B
RACK #: R4B04
CHASSIS ID: CFE-4B-EVT
SLOT #: 10
A16 BASE ADDRESS: NA

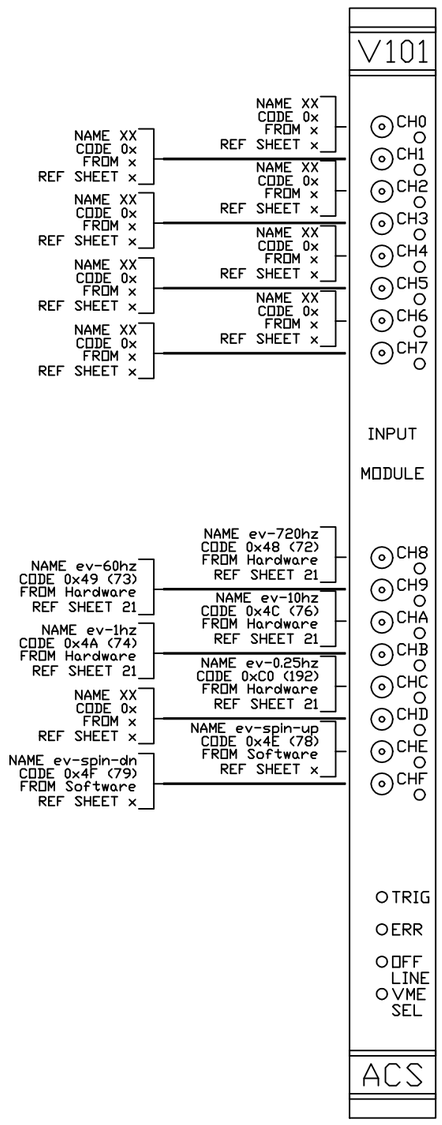

EVENT INPUT MODULE (5)

BLDG #: 1004B
RACK #: R4B04
CHASSIS ID: CFE-4B-EVT
SLOT #: 11
A16 BASE ADDRESS: NA

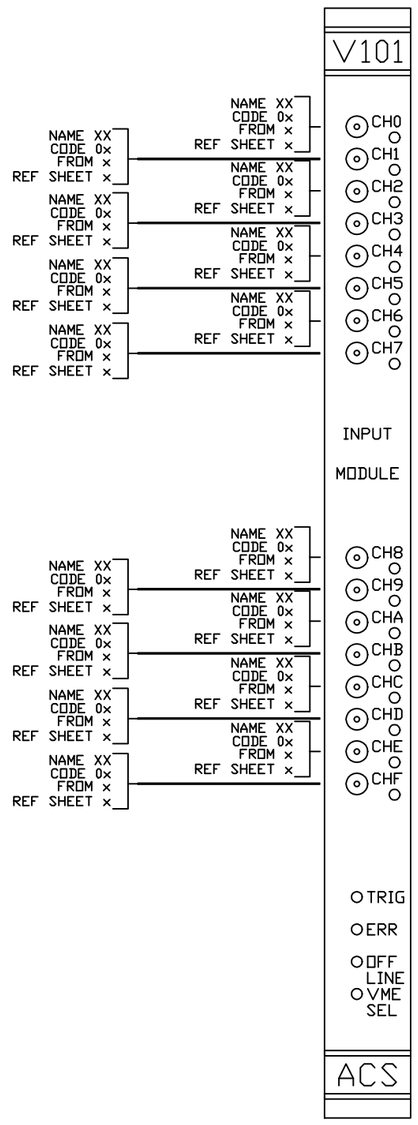

EVENT INPUT MODULE (6)

BLDG #: 1004B
RACK #: R4B04
CHASSIS ID: CFE-4B-EVT
SLOT #: 12
A16 BASE ADDRESS: NA

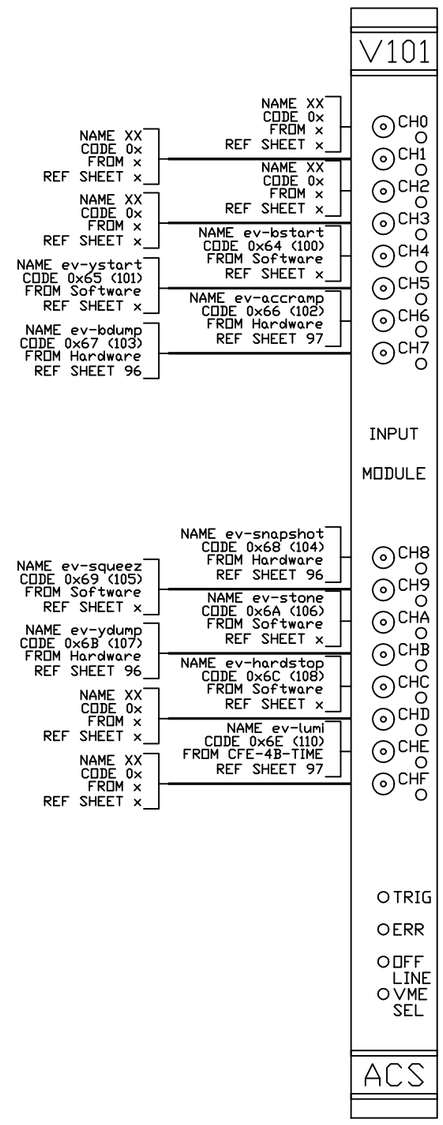

EVENT INPUT MODULE (7)

BLDG #: 1004B
RACK #: R4B04
CHASSIS ID: CFE-4B-EVT
SLOT #: 13
A16 BASE ADDRESS: NA

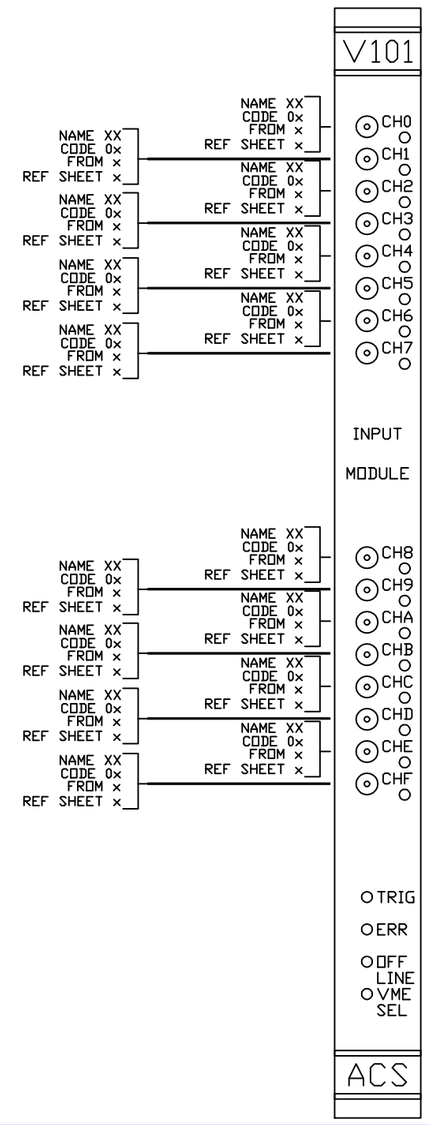

-3	-2	-1	REF DESIGNATOR	ITEM NO.	DESCRIPTION	MAT'L DWG NO.,BNL NO.
QTY REQD						

INTERPRET IN GENERAL ACCORDANCE WITH ASME Y14.24M-1989

UNLESS OTHERWISE SPECIFIED DIMENSIONS ARE IN INCHES
DECIMAL TOLERANCES .X ±.030 .XX ±.015 .XXX ±.005
ANGULAR TOLERANCE ± .5°

NA FINISH — BREAK SHARP EDGES MAX. XX MIN. XX

OUTSTANDING ECN

Q.A. CATEGORY A-3		DATE
DRAWN BY	Ed Koropsak	10/9/98
CHECKED BY		
DESIGN APPROVAL		
ENGINEER APPROVAL	R. MICHNOFF	10/9/98
SUPVR. APPROVAL		
NEXT ASSEMBLY		

BROOKHAVEN NATIONAL LABORATORY
UPTON, N.Y. 11973

RHIC CONTROLS WIRING DIAGRAM
SERVICE BLDG 1004B
EVENT LINK INPUTS

SIZE D — DRAWING NUMBER 94028529 — REV. A

MATERIAL: ——— SCALE: NA WEIGHT: – SHEET 81

C-A, BNL 3/20/01 2:12 PM 8529_81.dwg

*AUTOCAD

REV.	ZONE	ECN NO.	DATE	BY	CKR	APP.

EVENT INPUT MODULE (8)

BLDG #: 1004B
RACK #: R4B04
CHASSIS ID: CFE-4B-EVT
SLOT #: 14
A16 BASE ADDRESS: NA

V101

Channel	Name	Code	From	Ref sheet
CH0	XX	0x	x	x
CH1	XX	0x	x	x
CH2	XX	0x	x	x
CH3	XX	0x	x	x
CH4	XX	0x	x	x
CH5	XX	0x	x	x
CH6	XX	0x	x	x
CH7	XX	0x	x	x
CH8	XX	0x	x	x
CH9	XX	0x	x	x
CHA	XX	0x	x	x
CHB	XX	0x	x	x
CHC	XX	0x	x	x
CHD	XX	0x	x	x
CHE	XX	0x	x	x
CHF	XX	0x	x	x

INPUT MODULE

TRIG
ERR
OFF LINE
VME SEL

ACS

EVENT INPUT MODULE (9)

BLDG #: 1004B
RACK #: R4B04
CHASSIS ID: CFE-4B-EVT
SLOT #: 15
A16 BASE ADDRESS: NA

V101

Channel	Name	Code	From	Ref sheet
CH0	ev-brebucketrtrig	0x90 (144)	Hardware	114
CH1	ev-yrebucketrtrig	0x91 (145)	Hardware	114
CH2	ev-brebucketsetup	0x92 (146)	Software	x
CH3	ev-yrebucketsetup	0x93 (147)	Software	x
CH4	XX	0x	x	x
CH5	ev-bgtstart	0x96 (150)	V102.D CH 4	97
CH6	XX	0x	x	x
CH7	ev-ygtstart	0x97 (151)	V102.D CH 5	97
CH8	ev-bmax2min	0x98 (152)	Software	x
CH9	ev-bmin2inj	0x99 (153)	Software	x
CHA	ev-bmin2max	0x9A (154)	Software	x
CHB	ev-bstore2max	0x9B (155)	Software	x
CHC	ev-ymax2min	0x9C (156)	Software	x
CHD	ev-ymin2inj	0x9D (157)	Software	x
CHE	ev-ymin2max	0x9E (158)	Software	x
CHF	ev-ystore2max	0x9F (159)	Software	x

INPUT MODULE

TRIG
ERR
OFF LINE
VME SEL

ACS

EVENT INPUT MODULE (A)

BLDG #: 1004B
RACK #: R4B04
CHASSIS ID: CFE-4B-EVT
SLOT #: 16
A16 BASE ADDRESS: NA

V101

Channel	Name	Code	From	Ref sheet
CH0	XX	0x	x	x
CH1	XX	0x	x	x
CH2	XX	0x	x	x
CH3	XX	0x	x	x
CH4	XX	0x	x	x
CH5	XX	0x	x	x
CH6	XX	0x	x	x
CH7	XX	0x	x	x
CH8	ev-bpostmortem	0xA8 (168)	V102.C CH 7	96
CH9	ev-ypostmortem	0xA9 (169)	V102.C CH 8	96
CHA	XX	0x	x	x
CHB	XX	0x	x	x
CHC	XX	0x	x	x
CHD	XX	0x	x	x
CHE	XX	0x	x	x
CHF	XX	0x	x	x

INPUT MODULE

TRIG
ERR
OFF LINE
VME SEL

ACS

EVENT INPUT MODULE (B)

BLDG #: 1004B
RACK #: R4B04
CHASSIS ID: CFE-4B-EVT
SLOT #: 17
A16 BASE ADDRESS: NA

V101

Channel	Name	Code	From	Ref sheet
CH0	XX	0x	x	x
CH1	ev-brffeedback	0xB1 (177)	V102 CH1	96
CH2	ev-brffeedback-stop	0xB2 (178)	V102	97a
CH3	ev-ygammat	0xB3 (179)	V102 CH2	96
CH4	ev-bgammat	0x64 (180)	V102 CH3	96
CH5	ev-blm1	0xB5 (181)	Software	x
CH6	ev-blm2	0xB6 (182)	Software	x
CH7	ev-blm3	0xB7 (183)	Software	x
CH8	ev-blm4	0xB8 (184)	Software	x
CH9	ev-blm5	0xB9 (185)	Software	x
CHA	ev-blm6	0xBA (186)	Software	x
CHB	ev-agspreplus	0xBB (187)	V104	95
CHC	ev-waldo10	0xBC (188)	?	x
CHD	ev-waldo9	0xBD (189)	?	x
CHE	waldo8	0xBE (190)	?	x
CHF	ev-pool1	0xBF (191)	Software	x

INPUT MODULE

TRIG
ERR
OFF LINE
VME SEL

ACS

-3	-2	-1	REF DESIGNATOR	ITEM NO.	DESCRIPTION	MAT'L DWG NO./INL NO.
QTY REQD						

INTERPRET IN GENERAL ACCORDANCE WITH ASME Y14.24M-1989

UNLESS OTHERWISE SPECIFIED DIMENSIONS ARE IN INCHES

DECIMAL TOLERANCES
.X ±.030
.XX ±.015
.XXX ±.005
ANGULAR TOLERANCE
± .5°

FINISH: NA

BREAK SHARP EDGES MAX. XX MIN. XX

OUTSTANDING ECN

Q.A. CATEGORY A-3		DATE
DRAWN BY	Ed Koropsak	10/9/98
CHECKED BY		
DESIGN APPROVAL		
ENGINEER APPROVAL	R. MICHNOFF	10/9/98
SUPVR. APPROVAL		

NEXT ASSEMBLY

BROOKHAVEN NATIONAL LABORATORY
UPTON, N.Y. 11973

RHIC CONTROLS WIRING DIAGRAM
SERVICE BLDG 1004B
EVENT LINK INPUTS

SIZE D | DRAWING NUMBER 94028529 | REV. A

MATERIAL: ——— SCALE: NA WEIGHT: – SHEET 82

Controls, C-AD 4/28/2004 11:36 AM 8529_82.dwg

*AUTOCAD

REV.	ZONE	ECN NO.	DATE	BY	CKR	APP.

EVENT INPUT MODULE (C)

BLDG #: 1004B
RACK #: R4B04
CHASSIS ID: CFE-4B-EVT
SLOT #: 18
A16 BASE ADDRESS: NA

V101

NAME ev-pool2 CODE 0x4B (75) FROM Software REF SHEET x → CH0
NAME ev-pool3 CODE 0xC1 (193) FROM Software REF SHEET x → CH1
NAME ev-pool4 CODE 0xC2 (194) FROM Software REF SHEET x → CH2
NAME ev-pool5 CODE 0xC3 (195) FROM Software REF SHEET x → CH3
NAME ev-pool6 CODE 0xC4 (196) FROM Software REF SHEET x → CH4
NAME ev-pool7 CODE 0xC5 (197) FROM Software REF SHEET x → CH5
NAME ev-pool8 CODE 0xC6 (198) FROM V102.B CH 8 REF SHEET 96 → CH6
NAME ev-quenchdelay CODE 0xC7 (199) FROM V102.E CH1 REF SHEET 97a → CH7

INPUT MODULE

NAME ev-bspecial-cog CODE 0xC8 (200) FROM Software REF SHEET x → CH8
NAME ev-rfoo1 CODE 0xC9 (201) FROM ? REF SHEET x → CH9
NAME ev-yspecial-cog CODE 0xCA (202) FROM Software REF SHEET x → CHA
NAME ev-pentek-start CODE 0xCB (203) FROM Software REF SHEET x → CHB
NAME ev-pentek-stop CODE 0xCC (204) FROM Software REF SHEET x → CHC
NAME ev-breset-synchro CODE 0xCD (205) FROM ? REF SHEET x → CHD
NAME ev-rfstore CODE 0xCE (206) FROM Software REF SHEET x → CHE
NAME ev-yreset-synchro CODE 0xCF (207) FROM ? REF SHEET x → CHF

TRIG
ERR
OFF LINE
VME SEL

ACS

EVENT INPUT MODULE (D)

BLDG #: 1004B
RACK #: R4B04
CHASSIS ID: CFE-4B-EVT
SLOT #: 19
A16 BASE ADDRESS: NA

V101

NAME ev-rfoo2 CODE 0xD0 (208) FROM ? REF SHEET x → CH0
NAME XX CODE 0xD1 (209) FROM REF SHEET x → CH1
NAME ev-rfoo3 CODE 0xD2 (210) FROM ? REF SHEET x → CH2
NAME ev-rfoo4 CODE 0xD3 (211) FROM ? REF SHEET x → CH3
NAME ev-bsynchro-start CODE 0xD4 (212) FROM ? REF SHEET x → CH4
NAME ev-ysynchro-start CODE 0xD5 (213) FROM ? REF SHEET x → CH5
NAME ev-rfstore-off CODE 0xD6 (214) FROM Software REF SHEET x → CH6
NAME ev-rfacc CODE 0xD7 (215) FROM Software REF SHEET x → CH7

INPUT MODULE

NAME ev-rfacc-off CODE 0xD8 (216) FROM Software REF SHEET x → CH8
NAME ev-preacc CODE 0xD9 (217) FROM Software REF SHEET x → CH9
NAME XX CODE 0x FROM x REF SHEET x → CHA
NAME XX CODE 0x FROM x REF SHEET x → CHB
NAME XX CODE 0x FROM x REF SHEET x → CHC
NAME ev-rfprivate1 CODE 0xDD (221) FROM Software REF SHEET x → CHD
NAME ev-rfprivate2 CODE 0xDE (222) FROM Software REF SHEET x → CHE
NAME ev-rfprivate3 CODE 0xDF (223) FROM Software REF SHEET x → CHF

TRIG
ERR
OFF LINE
VME SEL

ACS

EVENT INPUT MODULE (E)

BLDG #: 1004B
RACK #: R4B04
CHASSIS ID: CFE-4B-EVT
SLOT #: 20
A16 BASE ADDRESS: NA

V101

NAME ev-rfprivate4 CODE 0xE0 (224) FROM Software REF SHEET x → CH0
NAME ev-rfprivate5 CODE 0xE1 (225) FROM Software REF SHEET x → CH1
NAME ev-rfprivate6 CODE 0xE2 (226) FROM Software REF SHEET x → CH2
NAME ev-phase-rampdown CODE 0xE3 (227) FROM Software REF SHEET x → CH3
ev-yrffeedback CODE 0xE4 (228) FROM V102 CH4 REF SHEET 96 → CH4
NAME ev-yrffeedback-stop CODE 0xE5 (229) FROM V102.E CH3 REF SHEET 97a → CH5
NAME ev-bcog-store CODE 0xE6 (230) FROM Software REF SHEET x → CH6
NAME ev-ycog-store CODE 0xE7 (231) FROM Software REF SHEET x → CH7

INPUT MODULE

NAME XX CODE 0x FROM x REF SHEET x → CH8
NAME XX CODE 0x FROM x REF SHEET x → CH9
NAME ev-bpm-reset CODE 0xEA (234) FROM Software REF SHEET x → CHA
NAME ev-bquench CODE 0xEB (235) FROM Hardware REF SHEET 106 → CHB
NAME ev-bqreset CODE 0xEC (236) FROM ? REF SHEET x → CHC
NAME ev-beampermit CODE 0xED (237) FROM ? REF SHEET x → CHD
NAME ev-yquench CODE 0xEE (238) FROM Hardware REF SHEET 106 → CHE
NAME ev-yqreset CODE 0xEF (239) FROM Software REF SHEET x → CHF

TRIG
ERR
OFF LINE
VME SEL

ACS

EVENT INPUT MODULE (F)

BLDG #: 1004B
RACK #: R4B04
CHASSIS ID: CFE-4B-EVT
SLOT #: 21
A16 BASE ADDRESS: NA

V101

NAME ev-bpmall CODE 0xF0 (240) FROM Software REF SHEET x → CH0
NAME ev-atrwfg1 CODE 0xF1 (241) FROM Software REF SHEET x → CH1
NAME ev-atrwfg2 CODE 0xF2 (242) FROM Software REF SHEET x → CH2
NAME ev-atrwfg3 CODE 0xF3 (243) FROM Software REF SHEET x → CH3
NAME ev-rf-test CODE 0xF4 (244) FROM ? REF SHEET x → CH4
NAME ev-ywarmup CODE 0xF5 (245) FROM Software REF SHEET x → CH5
NAME ev-bwarmup CODE 0xF6 (246) FROM Software REF SHEET x → CH6
NAME ev-waldo1 CODE 0xF7 (247) FROM ? REF SHEET x → CH7

INPUT MODULE

NAME ev-waldo2 CODE 0xF8 (248) FROM ? REF SHEET x → CH8
NAME ev-waldo3 CODE 0xF9 (249) FROM ? REF SHEET x → CH9
NAME ev-waldo4 CODE 0xFA (250) FROM ? REF SHEET x → CHA
NAME ev-waldo5 CODE 0xFB (251) FROM ? REF SHEET x → CHB
NAME ev-waldo6 CODE 0xFC (252) FROM ? REF SHEET x → CHC
NAME ev-wfg-bruce CODE 0xFD (253) FROM Software REF SHEET x → CHD
NAME ev-test.0 CODE 0xFE (254) FROM Software REF SHEET x → CHE
NAME ev-test.1 CODE 0xFF (255) FROM Software REF SHEET x → CHF

TRIG
ERR
OFF LINE
VME SEL

ACS

-3	-2	-1	REF DESIGNATOR	ITEM NO.	DESCRIPTION	MAT'L DWG NO./INL NO.
QTY REQD						

INTERPRET IN GENERAL ACCORDANCE WITH ASME Y14.24M-1989
UNLESS OTHERWISE SPECIFIED DIMENSIONS ARE IN INCHES
DECIMAL TOLERANCES .X ±.030 .XX ±.015 .XXX ±.005
ANGULAR TOLERANCE ± .5°

Q.A. CATEGORY A-3

		DATE
DRAWN BY	Ed Koropsak	10/9/98
CHECKED BY		
DESIGN APPROVAL		
ENGINEER APPROVAL	R. MICHNOFF	10/9/98
SUPVR. APPROVAL		

NEXT ASSEMBLY

OUTSTANDING ECN
NA FINISH
BREAK SHARP EDGES MAX. XX MIN. XX

BROOKHAVEN NATIONAL LABORATORY
UPTON, N.Y. 11973

RHIC CONTROLS WIRING DIAGRAM
SERVICE BLDG 1004B
EVENT LINK INPUTS

SIZE D | DRAWING NUMBER 94028529 | REV. A

MATERIAL: ——— SCALE: NA WEIGHT: – SHEET 83

Controls, C-AD 4/28/2004 11:47 AM 8529_83.dwg

1 *AUTOCAD

ACS, BNL 8/27/99 2:01 PM 8529_84.dwg

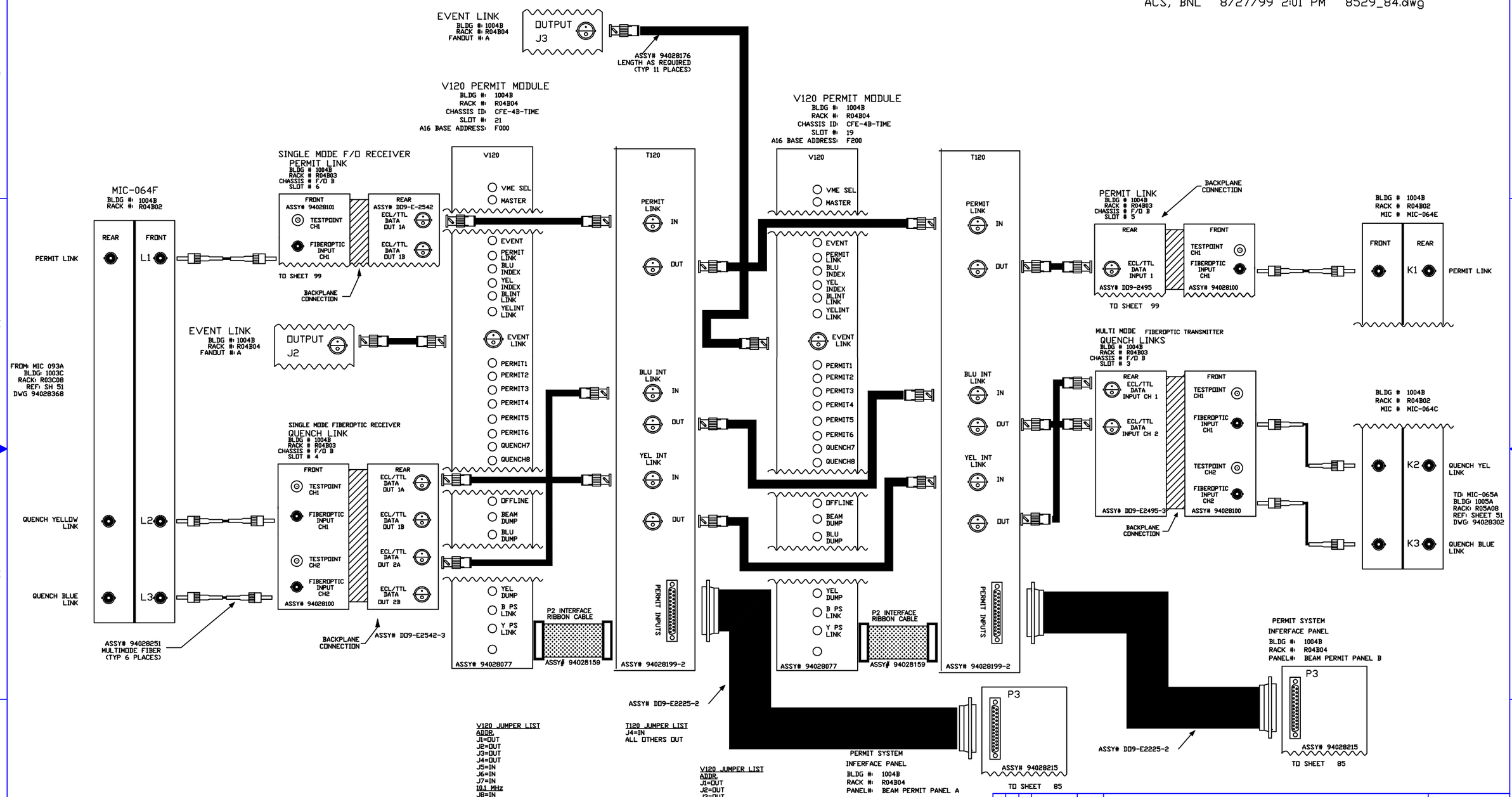

REV.	ZONE	ECN NO.	DATE	BY	CKR	APP.

-3	-2	-1	REF DESIGNATOR	ITEM NO.	DESCRIPTION	MAT'L DWG NO.,BNL NO.
QTY REQD						

INTERPRET IN GENERAL ACCORDANCE WITH ASME Y14.24M-1989

UNLESS OTHERWISE SPECIFIED DIMENSIONS ARE IN INCHES

DECIMAL TOLERANCES
.X ±.030
.XX ±.015
.XXX ±.005
ANGULAR TOLERANCE ± .5°

FINISH: NA

BREAK SHARP EDGES MAX. XX MIN. XX

OUTSTANDING ECN

Q.A. CATEGORY A-3

		DATE
DRAWN BY	Ed Koropsak	10/14/98
CHECKED BY		
DESIGN APPROVAL		
ENGINEER APPROVAL	R. MICHNOFF	10/14/98
SUPVR. APPROVAL		

NEXT ASSEMBLY

BROOKHAVEN NATIONAL LABORATORY
UPTON, N.Y. 11973

RHIC CONTROLS WIRING DIAGRAM

SERVIVE BLDG. 1004B, CHASSIS CFE-4B-TIME

V120/T120 PERMIT SYSTEM

SIZE: D

DRAWING NUMBER: 94028529

REV.: A

MATERIAL: ——— SCALE: NA WEIGHT: – SHEET 84 OF X

*AUTOCAD

REV.	ZONE	ECN NO.	DATE	BY	CKR	APP.

Controls, C-AD 4/28/2004 1:06 PM 8529_85.dwg

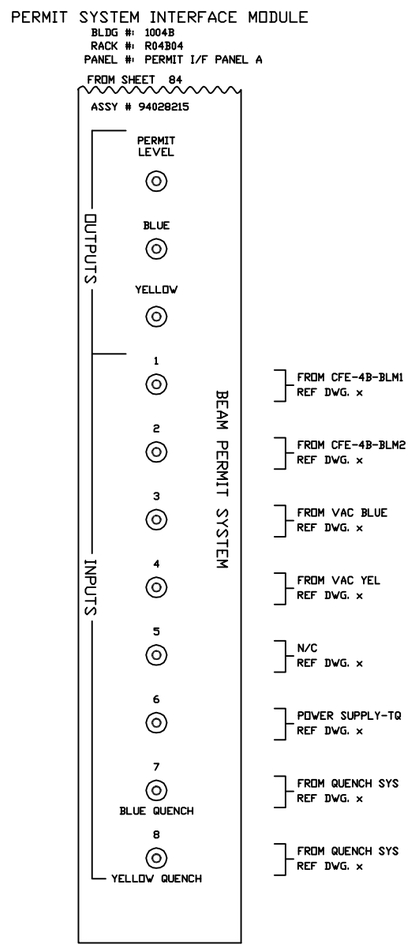

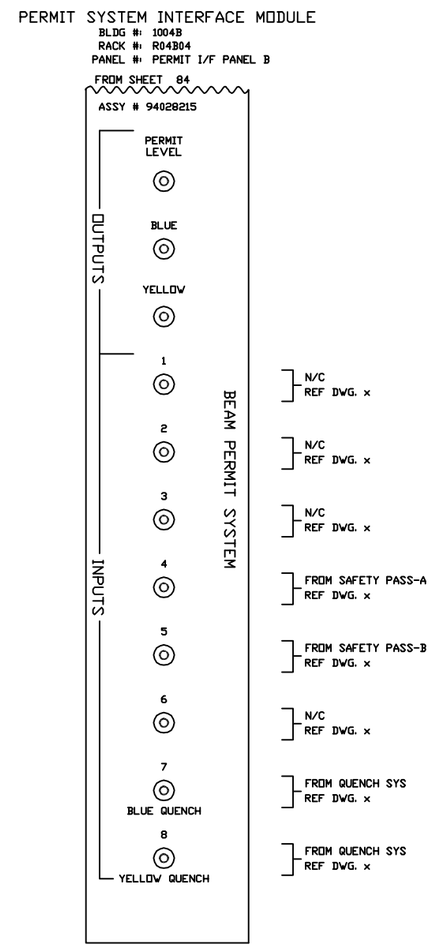

-3	-2	-1	REF DESIGNATOR	ITEM NO.	DESCRIPTION	MAT'L DWG NO./BNL NO.
QTY REQD						

INTERPRET IN GENERAL ACCORDANCE WITH ASME Y14.24M-1989

UNLESS OTHERWISE SPECIFIED DIMENSIONS ARE IN INCHES

DECIMAL TOLERANCES
.X ±.030
.XX ±.015
.XXX ±.005
ANGULAR TOLERANCE
± .5°

NA FINISH

BREAK SHARP EDGES
MAX. XX MIN. XX

OUTSTANDING ECN

Q.A. CATEGORY A-3		DATE	
DRAWN BY	Ed Koropsak	10/14/98	
CHECKED BY			
DESIGN APPROVAL			
ENGINEER APPROVAL	R. MICHNOFF	10/14/98	
SUPVR. APPROVAL			

NEXT ASSEMBLY

BROOKHAVEN NATIONAL LABORATORY
UPTON, N.Y. 11973

RHIC CONTROLS WIRING DIAGRAM
BLDG. 1004B, RACK R04B04

PERMIT SYSTEM INTERFACE PANEL

SIZE D | DRAWING NUMBER 94028529 | REV. A

MATERIAL: ——— SCALE: NA WEIGHT: – SHEET 85 / 108

*AUTOCAD

REV.	ZONE	ECN NO.	DATE	BY	CKR	APP.

C-A, BNL 3/20/01 3:02 PM 8529_86.dwg

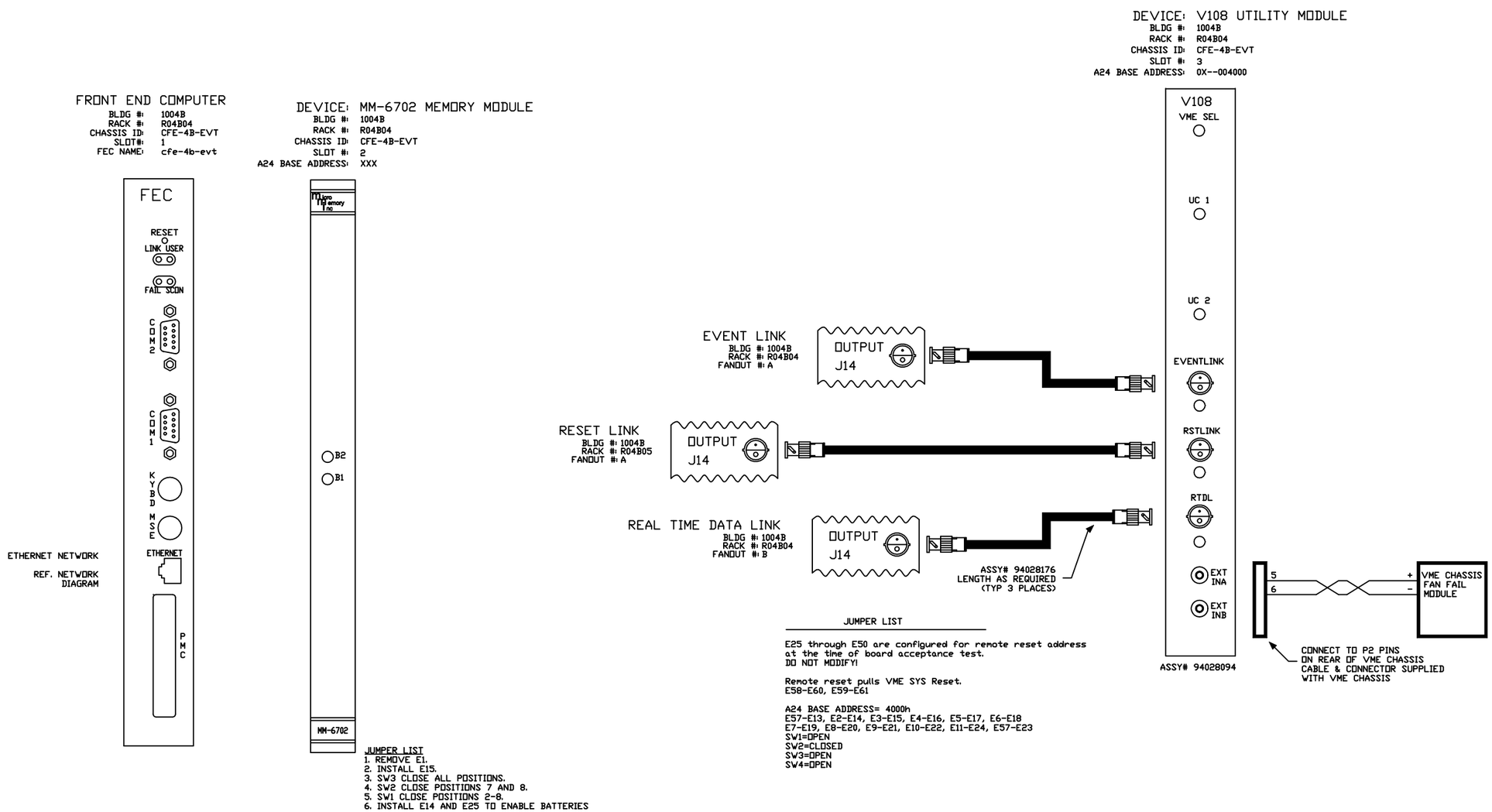

-3	-2	-1	REF DESIGNATOR	ITEM NO.	DESCRIPTION	MAT'L DWG NO./BNL NO.
QTY REQD						

INTERPRET IN GENERAL ACCORDANCE WITH ASME Y14.24M-1989	Q.A. CATEGORY A-3	DATE	BROOKHAVEN NATIONAL LABORATORY UPTON, N.Y. 11973
UNLESS OTHERWISE SPECIFIED DIMENSIONS ARE IN INCHES	DRAWN BY Ed Koropsak	10/15/98	RHIC CONTROLS WIRING DIAGRAM
DECIMAL TOLERANCES .X ±.030 .XX ±.015 .XXX ±.005 ANGULAR TOLERANCE ± .5°	CHECKED BY		1004B, VME CHASSIS CFE-4B-EVT
	DESIGN APPROVAL		FT END COMP/V108 UTIL MODULE
	ENGINEER APPROVAL R. MICHNOFF	10/15/98	
	SUPVR. APPROVAL		SIZE D — 94028529 — REV. A
NA FINISH	BREAK SHARP EDGES MAX. XX MIN. XX	NEXT ASSEMBLY	DRAWING NUMBER
OUTSTANDING ECN			MATERIAL: ——— SCALE: NA WEIGHT: – SHEET 86 / 108

*AUTOCAD

Controls, C-AD 4/28/2004 1:16 PM 8529_87.dwg

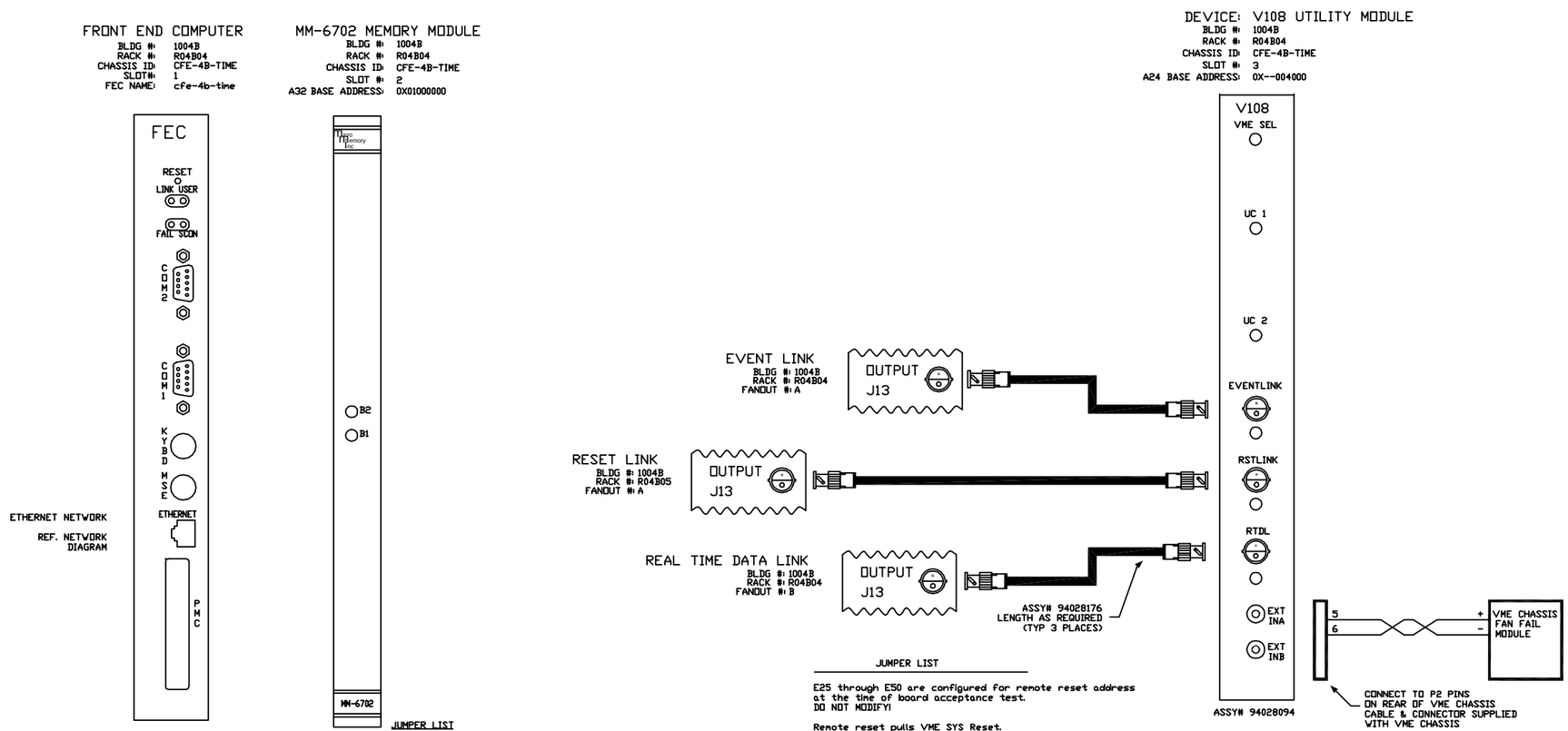

JUMPER LIST
1. REMOVE E1.
2. INSTALL E15.
3. SW3 CLOSE ALL POSITIONS.
4. SW2 CLOSE POSITIONS 7 AND 8.
5. SW1 CLOSE POSITIONS 2-8.
6. INSTALL E14 AND E25 TO ENABLE BATTERIES

JUMPER LIST

E25 through E50 are configured for remote reset address at the time of board acceptance test.
DO NOT MODIFY!

Remote reset pulls VME SYS Reset.
E58-E60, E59-E61

A24 BASE ADDRESS= 4000h
E57-E13, E2-E14, E3-E15, E4-E16, E5-E17, E6-E18
E7-E19, E8-E20, E9-E21, E10-E22, E11-E24, E57-E23
SW1=OPEN
SW2=CLOSED
SW3=OPEN
SW4=OPEN

REV.	ZONE	ECN NO.	DATE	BY	CKR	APP.

-3	-2	-1	REF DESIGNATOR	ITEM NO.	DESCRIPTION	MAT'L DWG NO./BNL NO.
QTY REQD						

INTERPRET IN GENERAL ACCORDANCE WITH ASME Y14.24M-1989
UNLESS OTHERWISE SPECIFIED DIMENSIONS ARE IN INCHES
DECIMAL TOLERANCES .X ±.030 .XX ±.015 .XXX ±.005
ANGULAR TOLERANCE ± .5°
NA FINISH
BREAK SHARP EDGES MAX. XX MIN. XX
OUTSTANDING ECN

Q.A. CATEGORY A-3		DATE
DRAWN BY	Ed Koropsak	10/15/98
CHECKED BY		
DESIGN APPROVAL		
ENGINEER APPROVAL	R. MICHNOFF	10/15/98
SUPVR. APPROVAL		

NEXT ASSEMBLY

BROOKHAVEN NATIONAL LABORATORY
UPTON, N.Y. 11973
RHIC CONTROLS WIRING DIAGRAM
1004B, VME CHASSIS CFE-4B-TIME
FT END COMP/V108 UTIL MODULE

SIZE D | DRAWING NUMBER 94028529 | REV. A

MATERIAL: ——— SCALE: NA WEIGHT: – SHEET 87 / 108

*AUTOCAD

REV.	ZONE	ECN NO.	DATE	BY	CKR	APP.

Controls, C-AD 4/28/2004 1:24 PM 8529_88.dwg

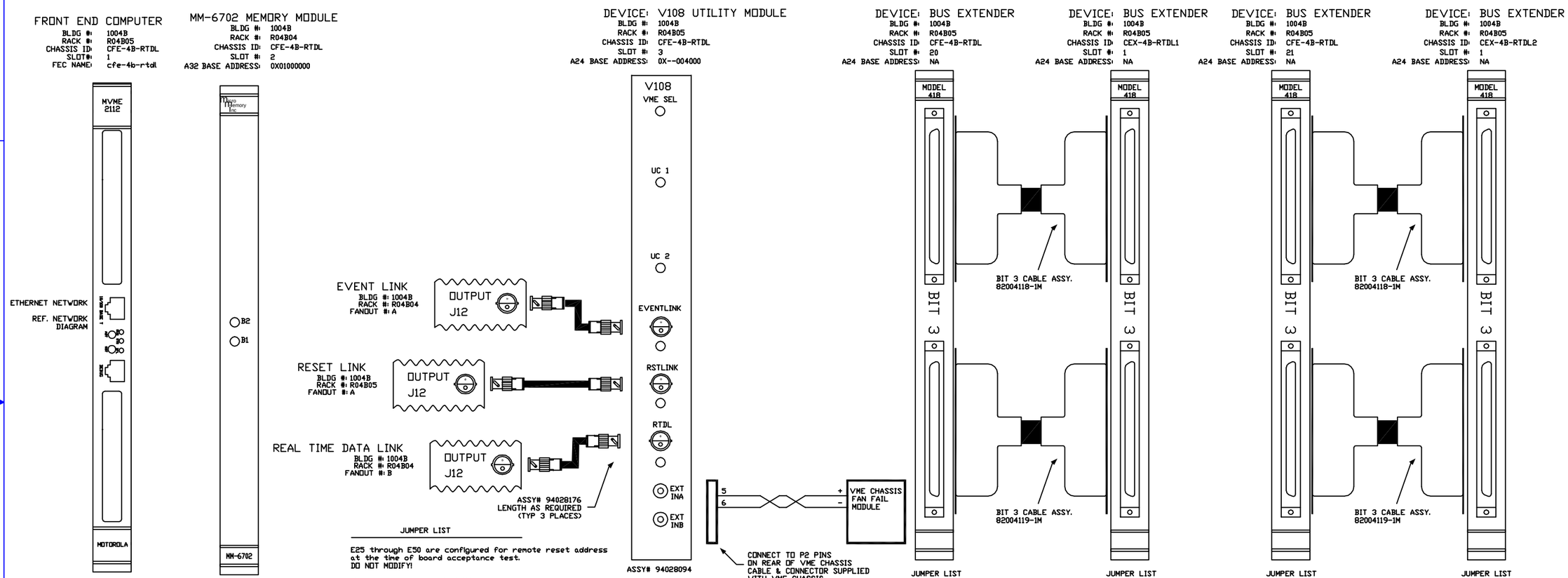

JUMPER LIST

E25 through E50 are configured for remote reset address at the time of board acceptance test.
DO NOT MODIFY!

Remote reset pulls VME SYS Reset.
E58-E60, E59-E61

A24 BASE ADDRESS= 4000h
E57-E13, E2-E14, E3-E15, E4-E16, E5-E17, E6-E18
E7-E19, E8-E20, E9-E21, E10-E22, E11-E24, E57-E23
SW1=OPEN
SW2=CLOSED
SW3=OPEN
SW4=OPEN

JUMPER LIST
1. REMOVE E1.
2. INSTALL E15.
3. SW3 CLOSE ALL POSITIONS.
4. SW2 CLOSE POSITIONS 7 AND 8.
5. SW1 CLOSE POSITIONS 2-8.
6. INSTALL E14 AND E25 TO ENABLE BATTERIES

-3	-2	-1	REF DESIGNATOR	ITEM NO.	DESCRIPTION	MAT'L DWG NO./BNL NO.
QTY REQD						

INTERPRET IN GENERAL ACCORDANCE WITH ASME Y14.24M-1989

UNLESS OTHERWISE SPECIFIED DIMENSIONS ARE IN INCHES

DECIMAL TOLERANCES
.X ±.030
.XX ±.015
.XXX ±.005
ANGULAR TOLERANCE ± .5°

OUTSTANDING ECN

NA FINISH

BREAK SHARP EDGES MAX. XX MIN. XX

Q.A. CATEGORY A-3

		DATE
DRAWN BY	Ed Koropsak	10/15/98
CHECKED BY		
DESIGN APPROVAL		
ENGINEER APPROVAL	R. MICHNOFF	10/15/98
SUPVR. APPROVAL		

NEXT ASSEMBLY

BROOKHAVEN NATIONAL LABORATORY
UPTON, N.Y. 11973

RHIC CONTROLS WIRING DIAGRAM
1004B, VME CHASSIS CFE-4B-RTDL

FT END COMP/V108 UTIL MODULE

SIZE D | DRAWING NUMBER 94028529 | REV. A

MATERIAL: ——— SCALE: NA WEIGHT: – SHEET 88 /108

1 *AUTOCAD

FUTURE BUS EXTENDERS

ACS, BNL 10/20/98 1:19 PM 8529_89.dwg

REV.	ZONE	ECN NO.	DATE	BY	CKR	APP.

DEVICE: BUS EXTENDER
BLDG #: 1004B
RACK #: R04B05
CHASSIS ID: CFE-4B-RTDL
SLOT #: X
A24 BASE ADDRESS: NA

DEVICE: BUS EXTENDER
BLDG #: 1004B
RACK #: R04B0X
CHASSIS ID: CEX-4B-RTDLX
SLOT #: 1
A24 BASE ADDRESS: NA

DEVICE: BUS EXTENDER
BLDG #: 1004B
RACK #: R04B05
CHASSIS ID: CFE-4B-RTDL
SLOT #: X
A24 BASE ADDRESS: NA

DEVICE: BUS EXTENDER
BLDG #: 1004B
RACK #: R04B0X
CHASSIS ID: CEX-4B-RTDLX
SLOT #: 1
A24 BASE ADDRESS: NA

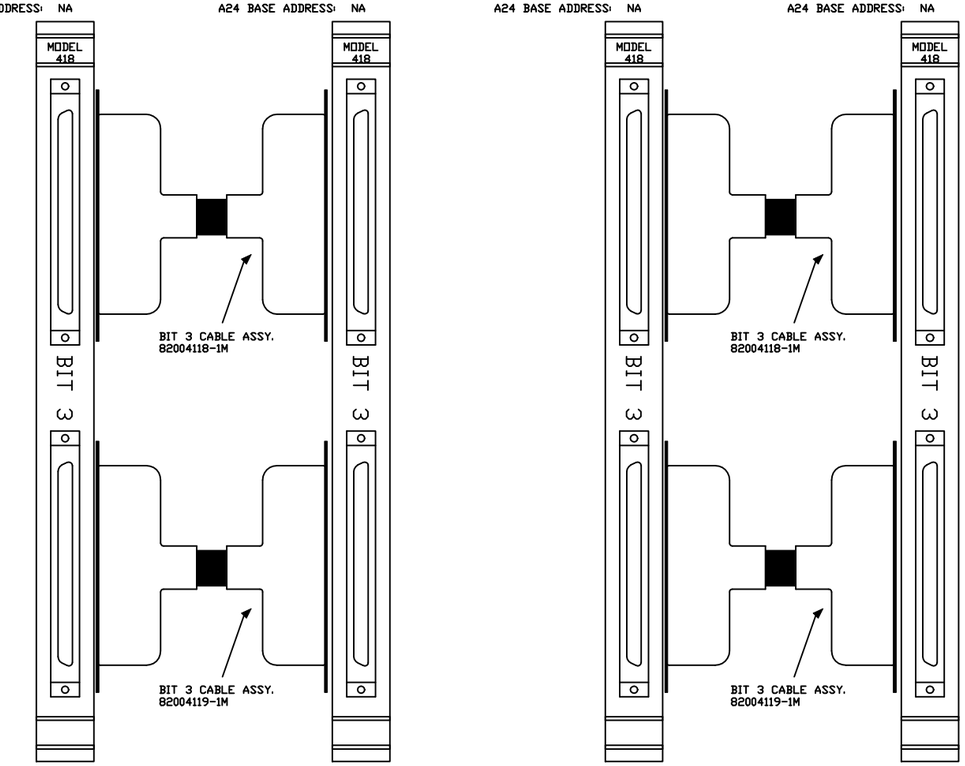

JUMPER LIST
C/S OUT
P/S IN
SYS IN
I/O 8-15 NOT USED

JUMPER LIST
C/S OUT
P/S OUT
SYS IN
I/O 8-15 NOT USED

JUMPER LIST
C/S OUT
P/S IN
SYS IN
I/O 8-15 NOT USED

JUMPER LIST
C/S OUT
P/S OUT
SYS IN
I/O 8-15 NOT USED

-3	-2	-1	REF DESIGNATOR	ITEM NO.	DESCRIPTION	MAT'L. DWG NO./BNL NO.
QTY REQD						

INTERPRET IN GENERAL ACCORDANCE WITH ASME Y14.24M-1989
UNLESS OTHERWISE SPECIFIED DIMENSIONS ARE IN INCHES
DECIMAL TOLERANCES
.X ±.030
.XX ±.015
.XXX ±.005
ANGULAR TOLERANCE ± .5°

NA FINISH
BREAK SHARP EDGES MAX. XX MIN. XX

OUTSTANDING ECN

Q.A. CATEGORY A-3		DATE
DRAWN BY	Ed Koropsak	10/15/98
CHECKED BY		
DESIGN APPROVAL		
ENGINEER APPROVAL	R. MICHNOFF	10/15/98
SUPVR. APPROVAL		

NEXT ASSEMBLY

BROOKHAVEN NATIONAL LABORATORY
UPTON, N.Y. 11973

RHIC CONTROLS WIRING DIAGRAM
1004B, VME CHASSIS CFE-4B-RTDL
BUS EXTENDERS

SIZE D
94028529
DRAWING NUMBER
REV. A

MATERIAL: ——— SCALE: NA WEIGHT: – SHEET 89 OF X

*AUTOCAD

REV.	ZONE	ECN NO.	DATE	BY	CKR	APP.

ACS, BNL 10/20/98 1:19 PM 8529_90.dwg

DEVICE: RTDL BUS EXTENDER
BLDG #: 1004B
RACK #: R04B05
CHASSIS ID: CFE-4B-RTDL
SLOT #: 14
A24 BASE ADDRESS: NA

DEVICE: RTDL BUS EXTENDER
BLDG #: 1004B
RACK #: R04B05
CHASSIS ID: CEX-4B-RTDL1
SLOT #: 4
A24 BASE ADDRESS: NA

DEVICE: RTDL BUS EXTENDER
BLDG #: 1004B
RACK #: R04B05
CHASSIS ID: CEX-4B-RTDL2
SLOT #: 4
A24 BASE ADDRESS: NA

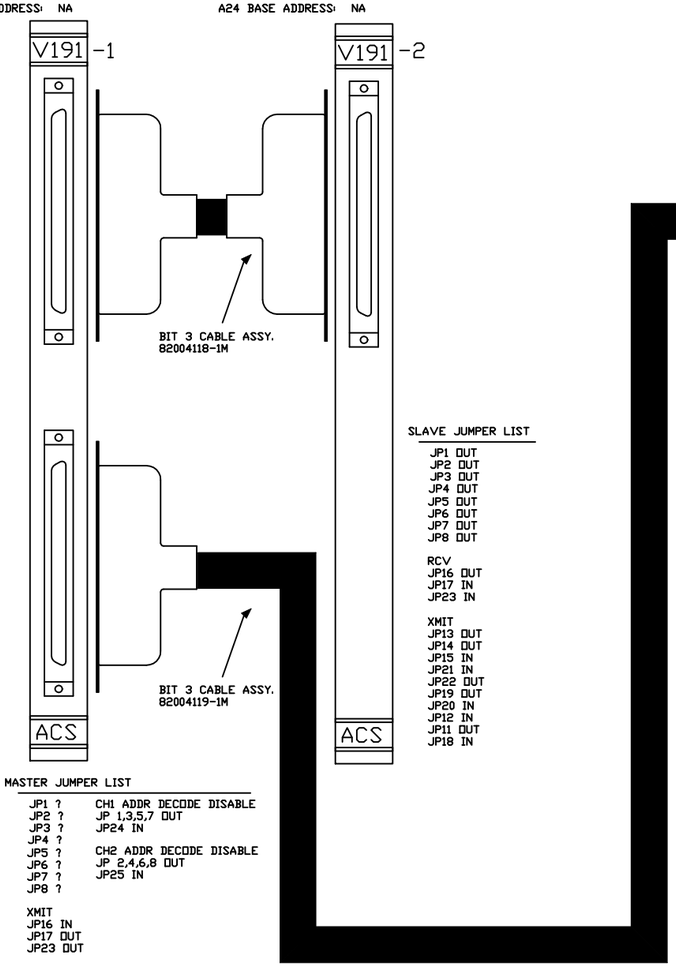

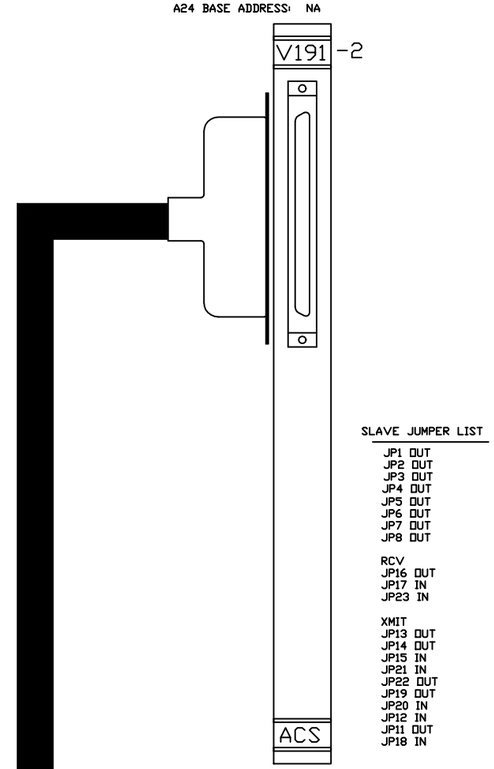

SLAVE JUMPER LIST

JP1 OUT
JP2 OUT
JP3 OUT
JP4 OUT
JP5 OUT
JP6 OUT
JP7 OUT
JP8 OUT

RCV
JP16 OUT
JP17 IN
JP23 IN

XMIT
JP13 OUT
JP14 OUT
JP15 IN
JP21 IN
JP22 OUT
JP19 OUT
JP20 IN
JP12 IN
JP11 OUT
JP18 IN

SLAVE JUMPER LIST

JP1 OUT
JP2 OUT
JP3 OUT
JP4 OUT
JP5 OUT
JP6 OUT
JP7 OUT
JP8 OUT

RCV
JP16 OUT
JP17 IN
JP23 IN

XMIT
JP13 OUT
JP14 OUT
JP15 IN
JP21 IN
JP22 OUT
JP19 OUT
JP20 IN
JP12 IN
JP11 OUT
JP18 IN

MASTER JUMPER LIST

JP1 ?
JP2 ?
JP3 ?
JP4 ?
JP5 ?
JP6 ?
JP7 ?
JP8 ?

CH1 ADDR DECODE DISABLE
JP 1,3,5,7 OUT
JP24 IN

CH2 ADDR DECODE DISABLE
JP 2,4,6,8 OUT
JP25 IN

XMIT
JP16 IN
JP17 OUT
JP23 OUT

RCV
JP13 IN
JP14 IN
JP15 OUT
JP21 OUT
JP22 IN
JP19 IN
JP20 OUT
JP12 OUT
JP11 IN
JP18 OUT

-3	-2	-1	REF DESIGNATOR	ITEM NO.	DESCRIPTION	MAT'L. DWG NO./INL NO.
QTY REQD						

INTERPRET IN GENERAL ACCORDANCE WITH ASME Y14.24M-1989

UNLESS OTHERWISE SPECIFIED DIMENSIONS ARE IN INCHES

DECIMAL TOLERANCES
X ±.030
.XX ±.015
.XXX ±.005
ANGULAR TOLERANCE
± .5°

NA FINISH

BREAK SHARP EDGES
MAX. XX MIN. XX

OUTSTANDING ECN

Q.A. CATEGORY A-3		DATE
DRAWN BY	Ed Koropsak	10/15/98
CHECKED BY		
DESIGN APPROVAL		
ENGINEER APPROVAL	R. MICHNOFF	10/15/98
SUPVR. APPROVAL		

NEXT ASSEMBLY

BROOKHAVEN NATIONAL LABORATORY
UPTON, N.Y. 11973

RHIC CONTROLS WIRING DIAGRAM
1004B, VME CHASSIS CFE-4B-RTDL
RTDL BUS EXTENDERS

SIZE D
94028529
DRAWING NUMBER
REV. A

MATERIAL: ——— SCALE: NA WEIGHT: – SHEET 90 OF X

*AUTOCAD

REV.	ZONE	ECN NO.	DATE	BY	CKR	APP.

Controls, C-AD 4/28/2004 1:30 PM 8529_91.dwg

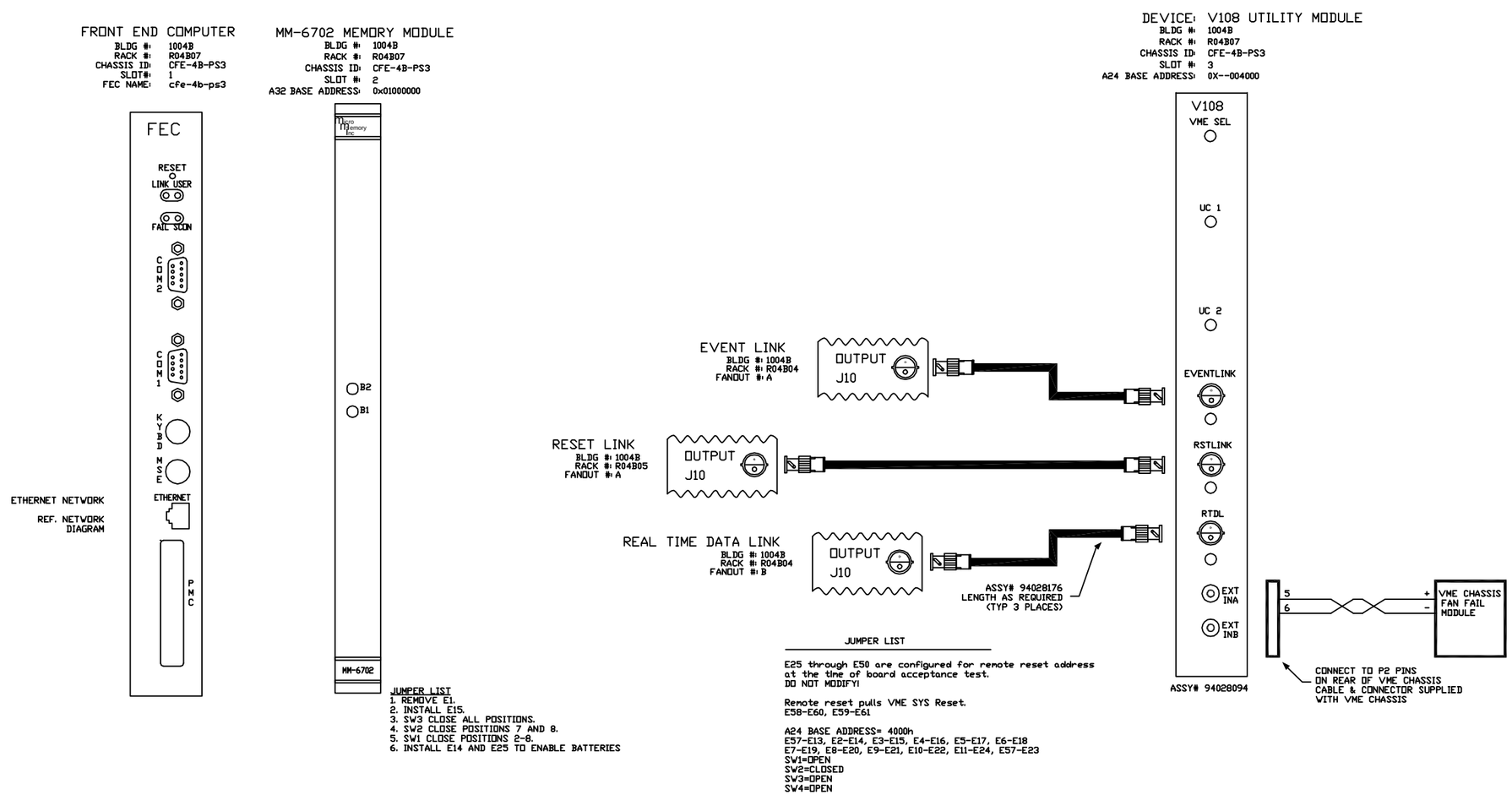

-3	-2	-1	REF DESIGNATOR	ITEM NO.	DESCRIPTION	MAT'L DWG NO.,SPEC. NO.
QTY REQD						

INTERPRET IN GENERAL ACCORDANCE WITH ASME Y14.24M-1989

UNLESS OTHERWISE SPECIFIED DIMENSIONS ARE IN INCHES

DECIMAL TOLERANCES
.X ±.030
.XX ±.015
.XXX ±.005
ANGULAR TOLERANCE
± .5°

NA FINISH

BREAK SHARP EDGES
MAX. XX MIN. XX

OUTSTANDING ECN

		DATE
Q.A. CATEGORY A-3		
DRAWN BY	Ed Koropsak	10/15/98
CHECKED BY		
DESIGN APPROVAL		
ENGINEER APPROVAL	R. MICHNOFF	10/15/98
SUPVR. APPROVAL		

NEXT ASSEMBLY

BROOKHAVEN NATIONAL LABORATORY
UPTON, N.Y. 11973

RHIC CONTROLS WIRING DIAGRAM
1004B, VME CHASSIS CFE-4B-PS3
FT END COMP/V108 UTIL MODULE

SIZE D | DRAWING NUMBER 94028529 | REV. A

MATERIAL: ——— SCALE: NA WEIGHT: – SHEET 91

*AUTOCAD

REV.	ZONE	ECN NO.	DATE	BY	CKR	APP.

Controls, C-AD 4/28/2004 1:35 PM 8529_92.dwg

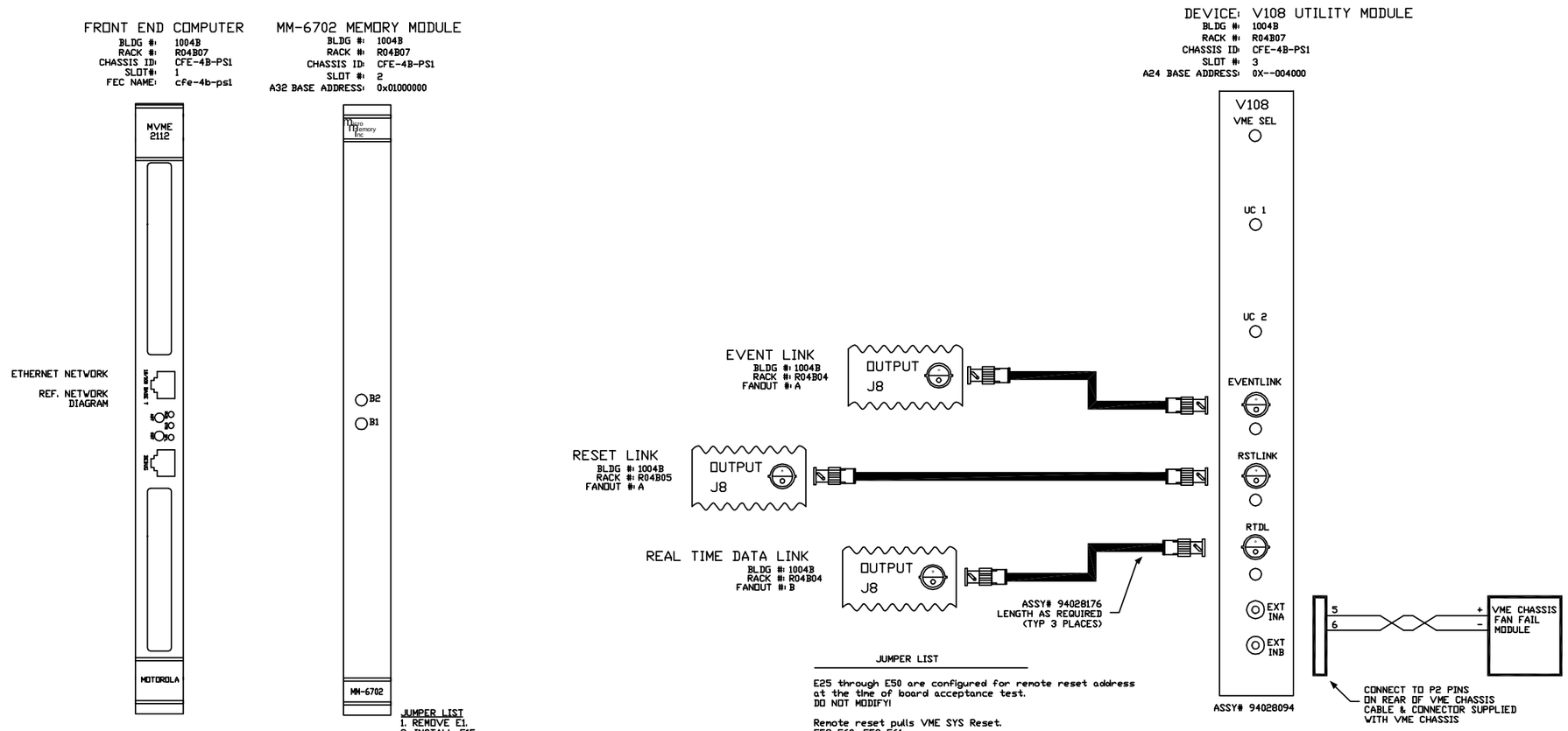

JUMPER LIST

1. REMOVE E1.
2. INSTALL E15.
3. SW3 CLOSE ALL POSITIONS.
4. SW2 CLOSE POSITIONS 7 AND 8.
5. SW1 CLOSE POSITIONS 2-8.
6. INSTALL E14 AND E25 TO ENABLE BATTERIES

JUMPER LIST

E25 through E50 are configured for remote reset address at the time of board acceptance test.
DO NOT MODIFY!

Remote reset pulls VME SYS Reset.
E58-E60, E59-E61

A24 BASE ADDRESS= 4000h
E57-E13, E2-E14, E3-E15, E4-E16, E5-E17, E6-E18
E7-E19, E8-E20, E9-E21, E10-E22, E11-E24, E57-E23
SW1=OPEN
SW2=CLOSED
SW3=OPEN
SW4=OPEN

-3	-2	-1	REF DESIGNATOR	ITEM NO.	DESCRIPTION	MAT'L DWG NO./MFR. NO.
QTY REQD						

INTERPRET IN GENERAL ACCORDANCE WITH ASME Y14.24M-1989	Q.A. CATEGORY A-3	DATE	BROOKHAVEN NATIONAL LABORATORY UPTON, N.Y. 11973
	DRAWN BY Ed Koropsak	10/15/98	
UNLESS OTHERWISE SPECIFIED DIMENSIONS ARE IN INCHES	CHECKED BY		RHIC CONTROLS WIRING DIAGRAM
DECIMAL TOLERANCES .X ±.030 .XX ±.015 .XXX ±.005 ANGULAR TOLERANCE ± .5°	DESIGN APPROVAL		1004B, VME CHASSIS CFE-4B-PS1
	ENGINEER APPROVAL R. MICHNOFF	10/15/98	FT END COMP/V108 UTIL MODULE
	SUPVR. APPROVAL		SIZE D — 94028529 — REV. A
OUTSTANDING ECN	NA FINISH	BREAK SHARP EDGES MAX. XX MIN. XX	NEXT ASSEMBLY — DRAWING NUMBER
			MATERIAL: — SCALE: NA WEIGHT: – SHEET 92 / 108

*AUTOCAD

REV.	ZONE	ECN NO.	DATE	BY	CKR	APP.

CONTROLS- 4/3/01 1:57 PM 8529_93.dwg

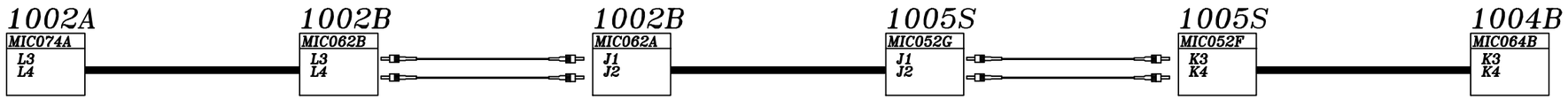

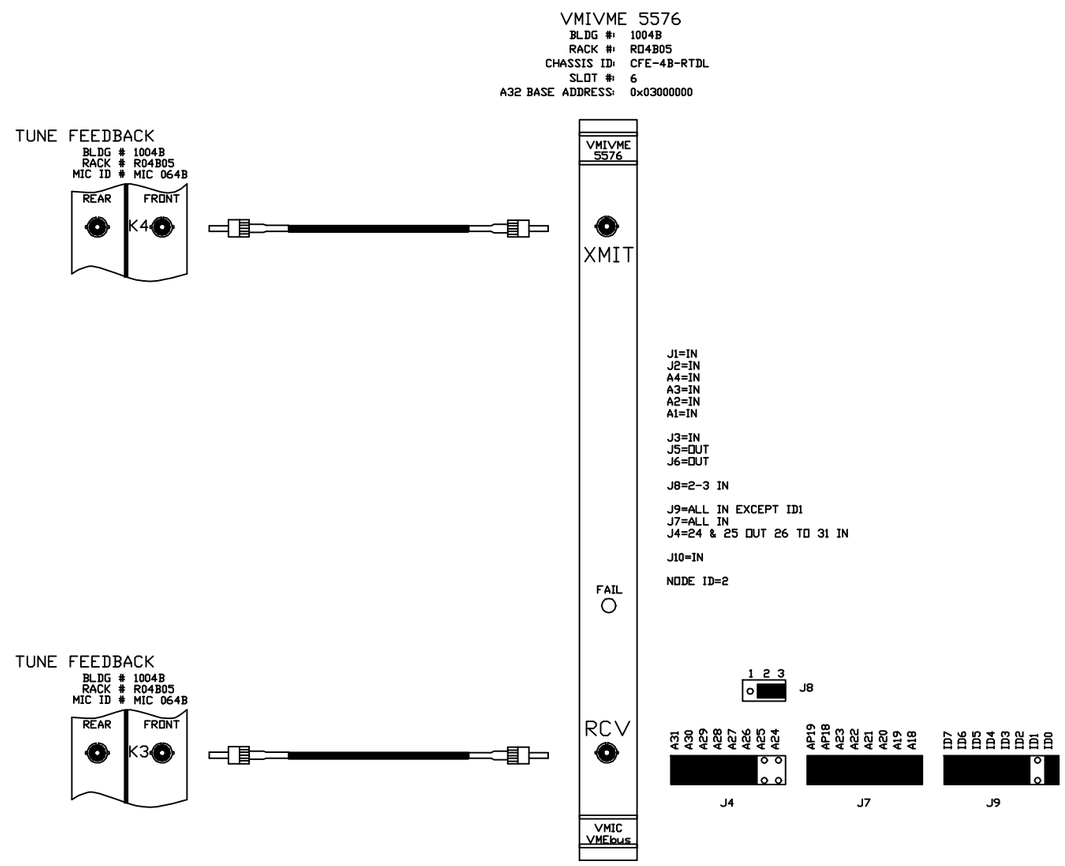

-3	-2	-1	REF DESIGNATOR	ITEM NO.	DESCRIPTION	MAT'L DWG NO.,BAR NO.
QTY REQD						

INTERPRET IN GENERAL ACCORDANCE WITH ASME Y14.24M-1989

UNLESS OTHERWISE SPECIFIED DIMENSIONS ARE IN INCHES

DECIMAL TOLERANCES
.X ±.030
.XX ±.015
.XXX ±.005
ANGULAR TOLERANCE
± .5°

OUTSTANDING ECN

NA FINISH

BREAK SHARP EDGES MAX. XX MIN. XX

		DATE
Q.A. CATEGORY A-3		
DRAWN BY	Ed Koropsak	3/27/01
CHECKED BY		
DESIGN APPROVAL		
ENGINEER APPROVAL	R. MICHNOFF	3/27/01
SUPVR. APPROVAL		

NEXT ASSEMBLY

BROOKHAVEN NATIONAL LABORATORY
UPTON, N.Y. 11973

RHIC CONTROLS WIRING DIAGRAM

BLDG. 1004B, RACK R04B05

TUNE FEEDBACK

SIZE D | DRAWING NUMBER 94028529 | REV. A

MATERIAL: ——— SCALE: NA WEIGHT: — SHEET 93

*AUTOCAD

Controls, C-AD 4/28/2004 1:56 PM 8529_94.dwg

REV.	ZONE	ECN NO.	DATE	BY	CKR	APP.

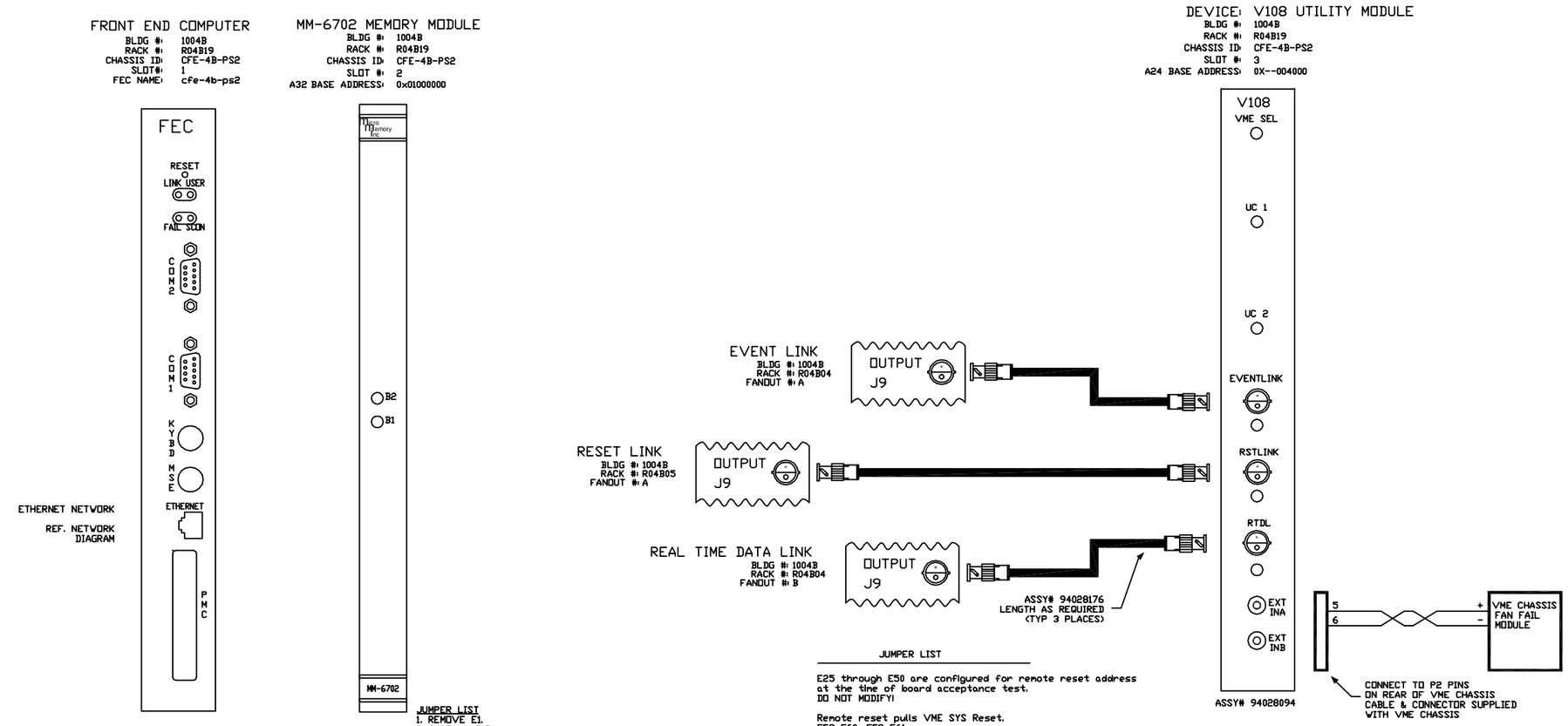

JUMPER LIST

1. REMOVE E1.
2. INSTALL E15.
3. SW2 CLOSE ALL POSITIONS.
4. SW2 CLOSE POSITIONS 7 AND 8.
5. SW1 CLOSE POSITIONS 2-8.
6. INSTALL E14 AND E25 TO ENABLE BATTERIES

JUMPER LIST

E25 through E50 are configured for remote reset address at the time of board acceptance test.
DO NOT MODIFY!

Remote reset pulls VME SYS Reset.
E58-E60, E59-E61

A24 BASE ADDRESS= 4000h
E57-E13, E2-E14, E3-E15, E4-E16, E5-E17, E6-E18
E7-E19, E8-E20, E9-E21, E10-E22, E11-E24, E57-E23
SW1=OPEN
SW2=CLOSED
SW3=OPEN
SW4=OPEN

-3	-2	-1	REF DESIGNATOR	ITEM NO.	DESCRIPTION	MAT'L DWG NO./INV. NO.
QTY REQD						

INTERPRET IN GENERAL ACCORDANCE WITH ASME Y14.24M-1989

UNLESS OTHERWISE SPECIFIED DIMENSIONS ARE IN INCHES

DECIMAL TOLERANCES
.X ±.030
.XX ±.015
.XXX ±.005
ANGULAR TOLERANCE
± .5°

NA FINISH

BREAK SHARP EDGES MAX. XX MIN. XX

OUTSTANDING ECN

Q.A. CATEGORY A-3		DATE
DRAWN BY	Ed Koropsak	10/15/98
CHECKED BY		
DESIGN APPROVAL		
ENGINEER APPROVAL	R. MICHNOFF	10/15/98
SUPVR. APPROVAL		

NEXT ASSEMBLY

BROOKHAVEN NATIONAL LABORATORY
UPTON, N.Y. 11973

RHIC CONTROLS WIRING DIAGRAM

1004B, VME CHASSIS CFE-4B-PS2

FT END COMP/V108 UTIL MODULE

SIZE D — DRAWING NUMBER 94028529 — REV. A

MATERIAL: ——— SCALE: NA WEIGHT: - SHEET 94 / 108

1 *AUTOCAD

REV.	ZONE	ECN NO.	DATE	BY	CKR	APP.

C-A, BNL 3/20/01 3:05 PM 8529_95.dwg

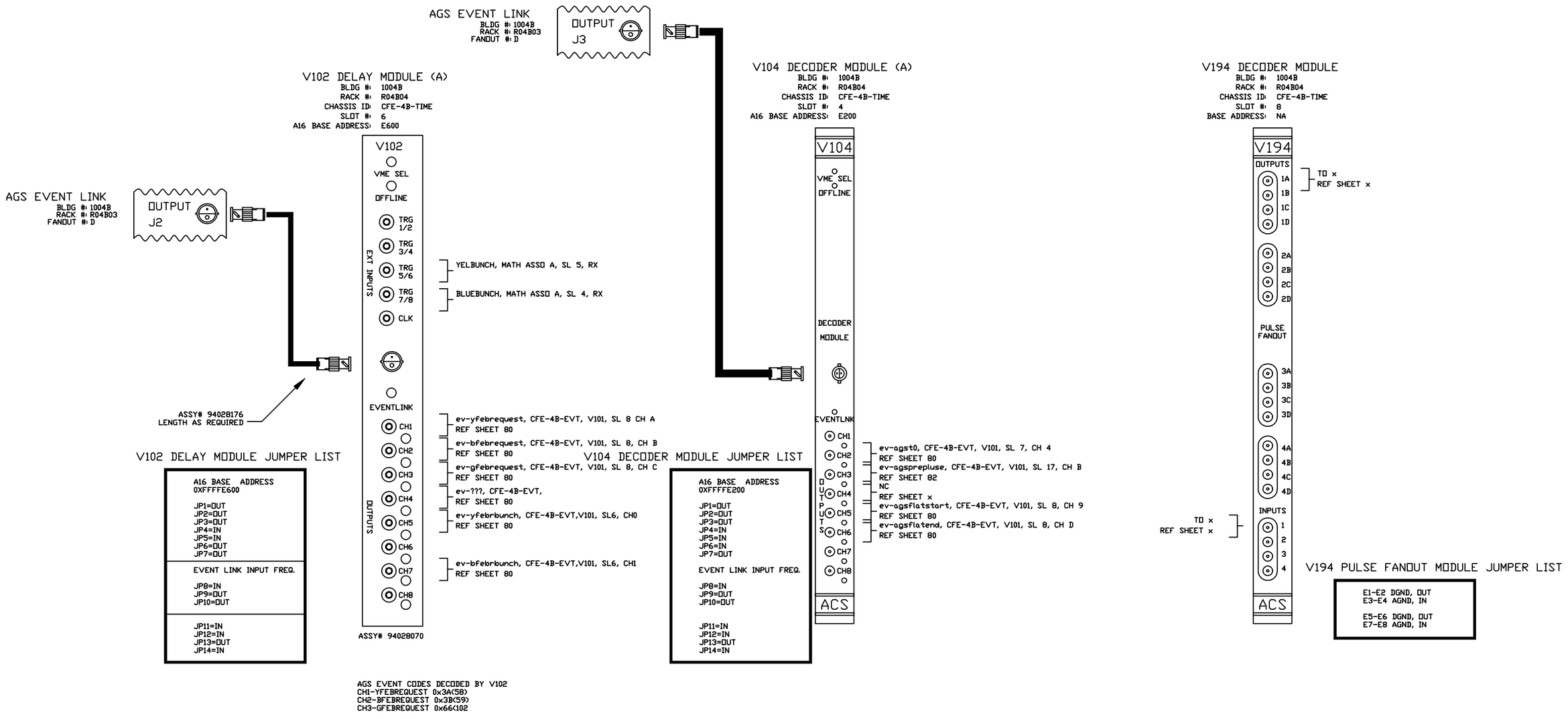

-3	-2	-1	REF DESIGNATOR	ITEM NO.	DESCRIPTION	MAT'L DWG NO./BNL NO.
QTY REQD						

INTERPRET IN GENERAL ACCORDANCE WITH ASME Y14.24M-1989	Q.A. CATEGORY A-3	DATE	BROOKHAVEN NATIONAL LABORATORY UPTON, N.Y. 11973
	DRAWN BY Ed Koropsak	10/15/98	
UNLESS OTHERWISE SPECIFIED DIMENSIONS ARE IN INCHES	CHECKED BY		RHIC CONTROLS WIRING DIAGRAM
DECIMAL TOLERANCES .X ±.030 .XX ±.015 .XXX ±.005 ANGULAR TOLERANCE ± .5°	DESIGN APPROVAL		BLDG. 1004B CHASSIS CFE-4B-TIME
	ENGINEER APPROVAL R. MICHNOFF	10/15/98	V102, V104, 194 AGS MODULES
	SUPVR. APPROVAL		SIZE D — 94028529 — REV. A
NA FINISH	BREAK SHARP EDGES MAX. XX MIN. XX	NEXT ASSEMBLY	DRAWING NUMBER
OUTSTANDING ECN			MATERIAL: ——— SCALE: NA WEIGHT: – SHEET 95

1 *AUTOCAD

C-A, BNL 3/20/01 3:10 PM 8529_96.dwg

REV.	ZONE	ECN NO.	DATE	BY	CKR	APP.

V102 DELAY MODULE (C)

BLDG #: 1004B
RACK #: R04B04
CHASSIS ID: CFE-4B-TIME
SLOT #: 13
A16 BASE ADDRESS: EA00

RHIC EVENT LINK
BLDG #: 1004B
RACK #: R04B04
FANOUT #: B

OUTPUT J5

ASSY# 94028176
LENGTH AS REQUIRED

V102
VME SEL
OFFLINE
EXT INPUTS: TRG 1/2, TRG 3/4, TRG 5/6, TRG 7/8, CLK
EVENTLINK
OUTPUTS: CH1, CH2, CH3, CH4, CH5, CH6, CH7, CH8

ASSY# 94028070

- ev-brffeedback,CFE-4B-EVT, SL17, CH1 — REF SHEET 82
- ev-ygammat,CFE-4B-EVT, SL17, CH3 — REF SHEET 82
- ev-bgammat,CFE-4B-EVT, SL17, CH4 — REF SHEET 82
- ev-yrffeedback,CFE-4B-EVT, SL20, CH4 — REF SHEET 83
- ev-bdump,CFE-4B-EVT, SL12, CH7 — REF SHEET 81
- ev-ydump,CFE-4B-EVT, SL12, CHB — REF SHEET 81
- ev-bpostmortem,CFE-4B-EVT, SL16, CH8 — REF SHEET 82
- ev-ypostmortem,CFE-4B-EVT, SL16, CH9 — REF SHEET 82

V102 DELAY MODULE JUMPER LIST

A16 BASE ADDRESS
0XFFFFEA00

JP1=OUT
JP2=OUT
JP3=OUT
JP4=IN
JP5=OUT
JP6=IN
JP7=OUT

EVENT LINK INPUT FREQ.

JP8=IN
JP9=OUT
JP10=OUT

JP11=IN
JP12=IN
JP13=OUT
JP14=IN

V102 DELAY MODULE (B)

BLDG #: 1004B
RACK #: R04B04
CHASSIS ID: CFE-4B-TIME
SLOT #: 12
A16
A16 BASE ADDRESS: E800

RHIC EVENT LINK
BLDG #: 1004B
RACK #: R04B04
FANOUT #: B

OUTPUT J6

ASSY# 94028176
LENGTH AS REQUIRED

V102
VME SEL
OFFLINE
EXT INPUTS: TRG 1/2, TRG 3/4, TRG 5/6, TRG 7/8, CLK
EVENTLINK
OUTPUTS: CH1, CH2, CH3, CH4, CH5, CH6, CH7, CH8

ASSY# 94028070

- ev-pool1,CFE-4B-EVT, SL17, CHF — REF SHEET 82
- ev-pool2,CFE-4B-EVT, SL18, CH0 — REF SHEET 83
- ev-pool3,CFE-4B-EVT, SL18, CH1 — REF SHEET 83
- ev-pool4,CFE-4B-EVT, SL18, CH2 — REF SHEET 83
- ev-pool5,CFE-4B-EVT, SL18, CH3 — REF SHEET 83
- ev-presnapshot,CFE-4B-EVT, SL9, CHB — REF SHEET 80
- ev-snapshot,CFE-4B-EVT, SL12, CH8 — REF SHEET 81
- ev-pool8,CFE-4B-EVT, SL18, CH6 — REF SHEET 83

V102 DELAY MODULE JUMPER LIST

A16 BASE ADDRESS
0XFFFFE800

JP1=OUT
JP2=OUT
JP3=OUT
JP4=IN
JP5=OUT
JP6=IN
JP7=IN

EVENT LINK INPUT FREQ.

JP8=IN
JP9=OUT
JP10=OUT

JP11=IN
JP12=IN
JP13=OUT
JP14=IN

V194 DECODER MODULE

BLDG #: 1004B
RACK #: R04B04
CHASSIS ID: CFE-4B-TIME
SLOT #: 8
BASE ADDRESS: NA

V194

OUTPUTS: 1A, 1B, 1C, 1D
- TO V107, 720 Hz INPUT, CFE-4B-RTDL, SL 5 — REF SHEET 21

2A, 2B, 2C, 2D
- TO CFE-4B-EVT, V101, SL 10 CH 8 — REF SHEET 81

PULSE FANOUT: 3A, 3B, 3C, 3D, 4A, 4B, 4C, 4D

INPUTS: 1, 2, 3, 4
- 720 Hz FROM POWER SUPPLY — REF SHEET x
- 720 Hz OUT FROM V107, CFE-4B-RTDL — REF SHEET 21

ACS

V194 PULSE FANOUT MODULE JUMPER LIST

E1-E2 DGND, OUT
E3-E4 AGND, IN

E5-E6 DGND, OUT
E7-E8 AGND, IN

-3	-2	-1	REF DESIGNATOR	ITEM NO.	DESCRIPTION	MAT'L DWG NO.,BNL NO.
QTY REQD						

INTERPRET IN GENERAL ACCORDANCE WITH ASME Y14.24M-1989

UNLESS OTHERWISE SPECIFIED DIMENSIONS ARE IN INCHES

DECIMAL TOLERANCES
.X ±.030
.XX ±.015
.XXX ±.005
ANGULAR TOLERANCE
± .5°

NA FINISH

BREAK SHARP EDGES
MAX. XX MIN. XX

OUTSTANDING ECN

Q.A. CATEGORY A-3		DATE
DRAWN BY	Ed Koropsak	10/15/98
CHECKED BY		
DESIGN APPROVAL		
ENGINEER APPROVAL	R. MICHNOFF	10/15/98
SUPVR. APPROVAL		

NEXT ASSEMBLY

BROOKHAVEN NATIONAL LABORATORY
UPTON, N.Y. 11973

RHIC CONTROLS WIRING DIAGRAM

BLDG. 1004B CHASSIS CFE-4B-TIME

V102, 194 RHIC MODULES

SIZE: D
DRAWING NUMBER: 94028529
REV.: A

MATERIAL: ——— SCALE: NA WEIGHT: – SHEET 96

*AUTOCAD

REV.	ZONE	ECN NO.	DATE	BY	CKR	APP.

C-A, BNL 3/20/01 3:30 PM 8529_97.dwg

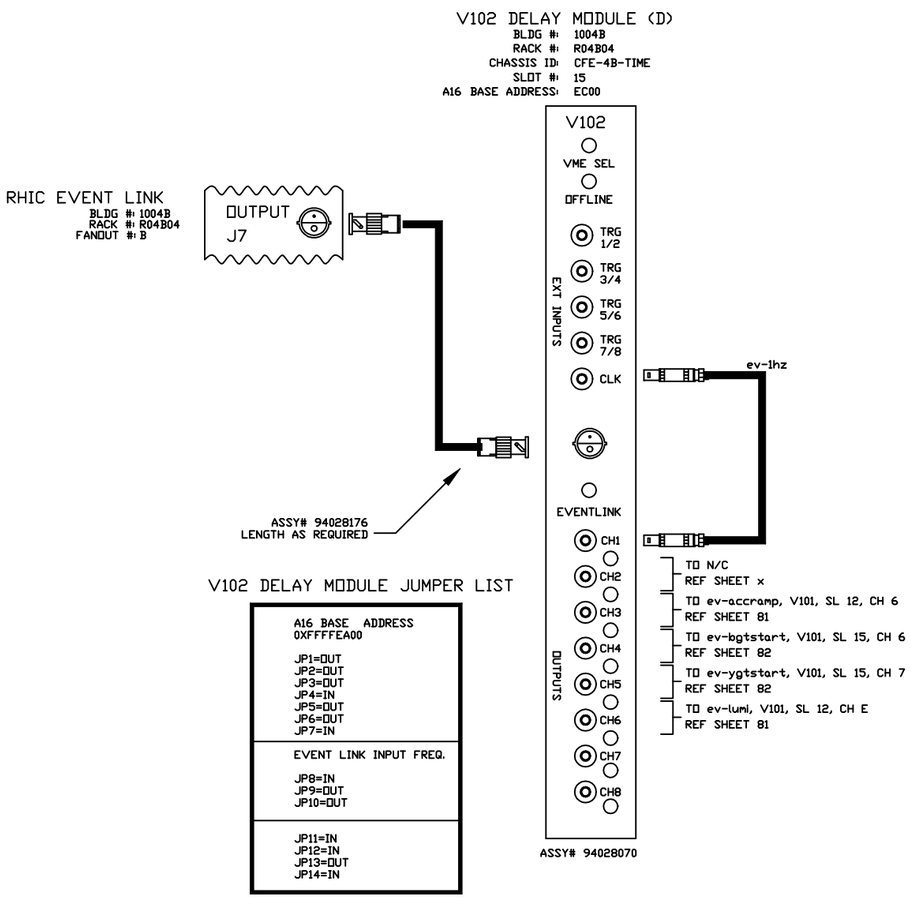

V102 DELAY MODULE JUMPER LIST

A16 BASE ADDRESS 0XFFFFEA00 JP1=OUT JP2=OUT JP3=OUT JP4=IN JP5=OUT JP6=OUT JP7=IN
EVENT LINK INPUT FREQ. JP8=IN JP9=OUT JP10=OUT
JP11=IN JP12=IN JP13=OUT JP14=IN

-3	-2	-1	REF DESIGNATOR	ITEM NO.	DESCRIPTION	MAT'L DWG NO.,BNL NO.
QTY REQD						

INTERPRET IN GENERAL ACCORDANCE WITH ASME Y14.24M-1989

UNLESS OTHERWISE SPECIFIED DIMENSIONS ARE IN INCHES

DECIMAL TOLERANCES
.X ±.030
.XX ±.015
.XXX ±.005
ANGULAR TOLERANCE
± .5°

OUTSTANDING ECN

NA FINISH

BREAK SHARP EDGES
MAX. XX MIN. XX

Q.A. CATEGORY A-3		DATE
DRAWN BY	Ed Koropsak	10/15/98
CHECKED BY		
DESIGN APPROVAL		
ENGINEER APPROVAL	R. MICHNOFF	10/15/98
SUPVR. APPROVAL		

NEXT ASSEMBLY

BROOKHAVEN NATIONAL LABORATORY
UPTON, N.Y. 11973

RHIC CONTROLS WIRING DIAGRAM

BLDG. 1004B CHASSIS CFE-4B-TIME

V102 RHIC MODULES

SIZE D | DRAWING NUMBER 94028529 | REV. A

MATERIAL: ——— SCALE: NA WEIGHT: – SHEET 97

*AUTOCAD

Controls, C-AD 4/28/2004 2:37 PM 8529_97a.dwg

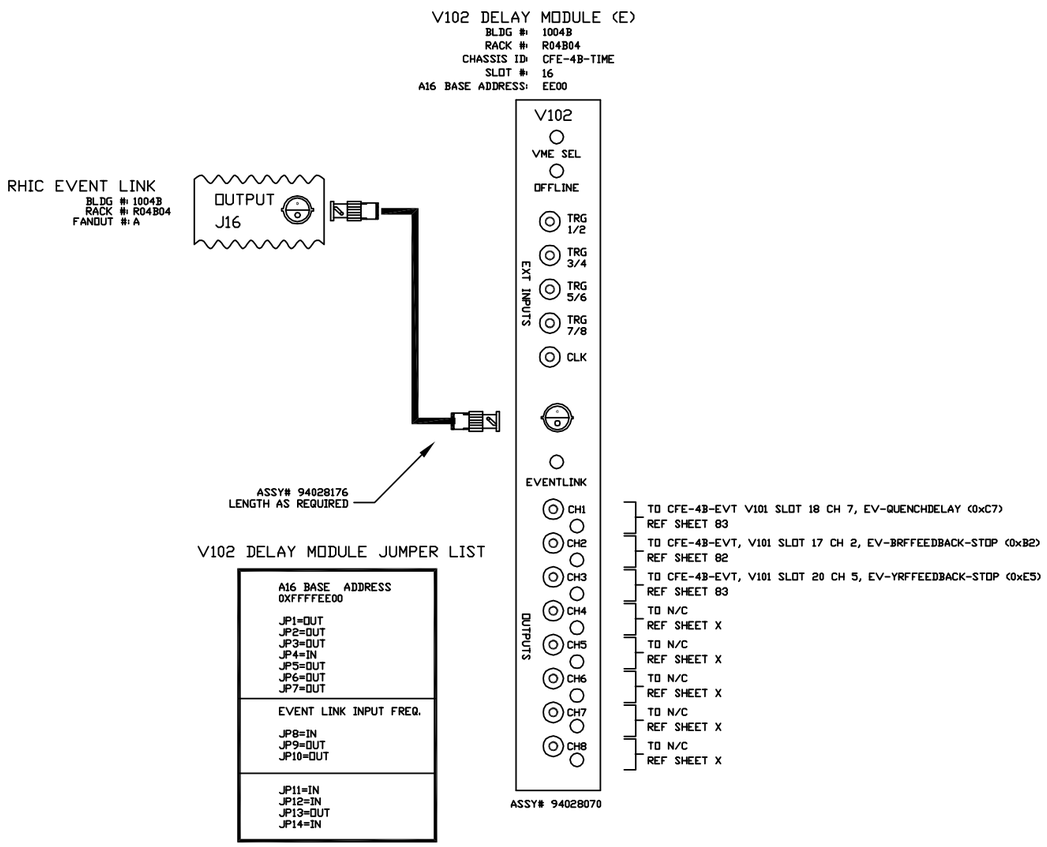

V102 DELAY MODULE JUMPER LIST

A16 BASE ADDRESS 0XFFFFEE00 JP1=OUT JP2=OUT JP3=OUT JP4=IN JP5=OUT JP6=OUT JP7=OUT
EVENT LINK INPUT FREQ. JP8=IN JP9=OUT JP10=OUT
JP11=IN JP12=IN JP13=OUT JP14=IN

REV.	ZONE	ECN NO.	DATE	BY	CKR	APP.

-3	-2	-1	REF DESIGNATOR	ITEM NO.	DESCRIPTION	MAT'L DWG NO./INV. NO.
QTY REQD						

INTERPRET IN GENERAL ACCORDANCE WITH ASME Y14.24M-1989

UNLESS OTHERWISE SPECIFIED DIMENSIONS ARE IN INCHES

DECIMAL TOLERANCES
.X ±.030
.XX ±.015
.XXX ±.005
ANGULAR TOLERANCE
± .5°

NA FINISH

BREAK SHARP EDGES
MAX. XX MIN. XX

OUTSTANDING ECN

Q.A. CATEGORY A-3		DATE
DRAWN BY	Bill Venegas	11/27/02
CHECKED BY		
DESIGN APPROVAL		
ENGINEER APPROVAL	R. MICHNOFF	10/15/98
SUPVR. APPROVAL		

NEXT ASSEMBLY

BROOKHAVEN NATIONAL LABORATORY
UPTON, N.Y. 11973

RHIC CONTROLS WIRING DIAGRAM
BLDG. 1004B CHASSIS CFE-4B-TIME
V102 RHIC MODULES

SIZE D | DRAWING NUMBER 94028529 | REV. A

MATERIAL: ——— SCALE: NA WEIGHT: – SHEET 97a

*AUTOCAD

REV.	ZONE	ECN NO.	DATE	BY	CKR	APP.

Controls, C-AD 4/28/2004 2:53 PM 8529_98.dwg

NONE

-3	-2	-1	REF DESIGNATOR	ITEM NO.	DESCRIPTION	MAT'L. DWG NO./JRNL NO.
QTY REQD						

INTERPRET IN GENERAL ACCORDANCE WITH ASME Y14.24M-1989

UNLESS OTHERWISE SPECIFIED DIMENSIONS ARE IN INCHES

DECIMAL TOLERANCES
.X ±.030
.XX ±.015
.XXX ±.005
ANGULAR TOLERANCE
± .5°

OUTSTANDING ECN

NA FINISH

BREAK SHARP EDGES
MAX. XX MIN. XX

Q.A. CATEGORY A-3		DATE
DRAWN BY	Ed Korapsak	10/9/98
CHECKED BY		
DESIGN APPROVAL		
ENGINEER APPROVAL	R.MICHNOFF	10/9/98
SUPVR. APPROVAL		

NEXT ASSEMBLY

BROOKHAVEN NATIONAL LABORATORY
UPTON, N.Y. 11973

RHIC CONTROLS WIRING DIAGRAM
BLDG. 1004B
SPARE MADC CHANNELS

SIZE D
DRAWING NUMBER 94028529
REV. A

MATERIAL: ——— SCALE: NA WEIGHT: – SHEET 98 OF X

*AUTOCAD

REV.	ZONE	ECN NO.	DATE	BY	CKR	APP.

ACS, BNL 10/20/98 1:32 PM 8529_99.dwg

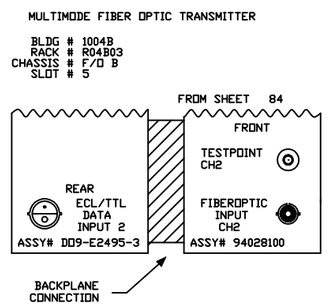

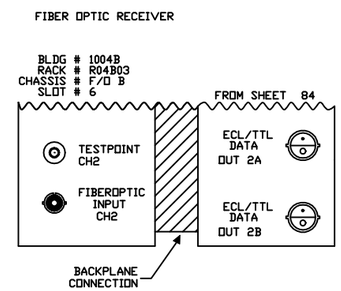

-3	-2	-1	REF DESIGNATOR	ITEM NO.	DESCRIPTION	MAT'L. DWG NO.,BNL NO.
QTY REQD						

INTERPRET IN GENERAL ACCORDANCE WITH ASME Y14.24M-1989

UNLESS OTHERWISE SPECIFIED DIMENSIONS ARE IN INCHES

DECIMAL TOLERANCES
.X ±.030
.XX ±.015
.XXX ±.005
ANGULAR TOLERANCE
± .5°

NA FINISH

BREAK SHARP EDGES
MAX. XX MIN. XX

OUTSTANDING ECN

Q.A. CATEGORY A-3		DATE
DRAWN BY	Ed Koropsak	10/9/98
CHECKED BY		
DESIGN APPROVAL		
ENGINEER APPROVAL	R. MICHNOFF	10/9/98
SUPVR. APPROVAL		
NEXT ASSEMBLY		

BROOKHAVEN NATIONAL LABORATORY
UPTON, N.Y. 11973

RHIC CONTROLS WIRING DIAGRAM
SERVICE BLDG. 1004B

SPARE F/O RCVR/XMIT CHANNELS

SIZE D | DRAWING NUMBER 94028529 | REV. A

MATERIAL: ——— SCALE: NA WEIGHT: – SHEET 99 OF X

*AUTOCAD

Controls, bnl 5/3/2004 2:12 PM 8529_100.dwg

REV.	ZONE	ECN NO.	DATE	BY	CKR	APP.

DX Heater PS MADC Readbacks

MADC MUX A/D IO PANEL
BLDG #: 1004B
RACK #: R04B07
PANEL #: MADC A/D IO PANEL G
FR SHEET124
J15 — CHAN 47 POWER SUPPLY 1004B-3-1-A2 VOLTAGE g3-dxh-hta

MADC MUX A/D IO PANEL
BLDG #: 1004B
RACK #: R04B07
PANEL #: MADC A/D IO PANEL H
FR SHEET 52
J0 — CHAN 48 POWER SUPPLY 1004B-3-1-A2 CURRENT g3-dxh-hta
J1 — CHAN 49 POWER SUPPLY 1004B-3-1-A2 GND CURRENT g3-dxh-hta
J2 — CHAN 50 POWER SUPPLY 1004B-3-2-B2 VOLTAGE g3-dxh-htb
J3 — CHAN 51 POWER SUPPLY 1004B-3-2-B2 CURRENT g3-dxh-htb
J4 — CHAN 52 POWER SUPPLY 1004B-3-2-B2 GND CURRENT g3-dxh-htb
TO SHEET 100

MADC MUX A/D IO PANEL
BLDG #: 1004B
RACK #: R04B07
PANEL #: MADC A/D IO PANEL G
FR SHEET 100
J5 — CHAN 53 POWER SUPPLY 1004B-4-1-A1 VOLTAGE g4-dxh-hta
J6 — CHAN 54 POWER SUPPLY 1004B-4-1-A1 CURRENT g4-dxh-hta
J7 — CHAN 55 POWER SUPPLY 1004B-4-1-A1 GND CURRENT g4-dxh-hta
J8 — CHAN 56 POWER SUPPLY 1004B-4-2-B1 VOLTAGE g4-dxh-htb
J9 — CHAN 57 POWER SUPPLY 1004B-4-2-B1 CURRENT g4-dxh-htb
J10 — CHAN 58 POWER SUPPLY 1004B-4-2-B1 GND CURRENT g4-dxh-htb
TO SHEET 119

HIGH BAY ROOM TEMP SENSOR
POWER FROM EXTERNAL POWER SUPPLY: +24 V, GND

MADC MUX A/D IO PANEL
BLDG #: 1004B
RACK #: R04B07
PANEL #: MADC A/D IO PANEL H
FR SHEET 100
J12 — CHAN 60 TEMP
TO SHEET 100

ROOM TEMP SENSOR
POWER FROM BUFFERED MADC POWER SUPPLY: +24 V, GND

MADC MUX A/D IO PANEL
BLDG #: 1004B
RACK #: R04B07
PANEL #: MADC A/D IO PANEL H
FR SHEET 100
J11 — CHAN 59 TEMP
TO SHEET 100

MADC MUX A/D IO PANEL
BLDG #: 1004B
RACK #: R04B07
PANEL #: MADC A/D IO PANEL H
FR SHEET 100
J13 — CHAN 61 BLUE 208V-1 BEING USED FOR QUENCH 4B.BLUE
J14 — CHAN 62 BLUE 208V-2
J15 — CHAN 63 BLUE 208V-3

MADC MUX A/D IO PANEL
BLDG #: 1004B
RACK #: R04B19
PANEL #: MADC A/D IO PANEL F
FR SHEET 143
J12 — CHAN 28 g3-cc-pwx VACUUM
J13 — CHAN 29 g3-cc-pw1 VACUUM
J14 — CHAN 30 yo3-cc-pw3.2 VACUUM
J15 — CHAN 31 bl3-cc-pw3.2 VACUUM

MADC MUX A/D IO PANEL
BLDG #: 1004B
RACK #: R04B19
PANEL #: MADC A/D IO PANEL H
FR SHEET 66
J0 — CHAN 48 g4-cc-pwx VACUUM
J1 — CHAN 49 g4-cc-pw1 VACUUM
J2 — CHAN 50 yo4-cc-pw3.1 VACUUM
J3 — CHAN 51 bl4-cc-pw3.1 VACUUM
TO SHEET 100

MADC MUX A/D IO PANEL
BLDG #: 1004B
RACK #: R04B19
PANEL #: MADC A/D IO PANEL H
FR SHEET 100
J4 — CHAN 52 yo4-cc-pw3.2 VACUUM
J5 — CHAN 53 bl4-cc-pw3.2 VACUUM
J6 — CHAN 54 yo4-cc-pw3.3 VACUUM
TO SHEET 141

MADC MUX A/D IO PANEL
BLDG #: 1004B
RACK #: R04B07
PANEL #: MADC A/D IO PANEL C
FR SHEET 57
J8 — CHAN 40 bl4-cc-pw3.3 VACUUM
TO SHEET 121

MADC MUX A/D IO PANEL
BLDG #: 1004B
RACK #: R04B19
PANEL #: MADC A/D IO PANEL H
FR SHEET 141
J13 — CHAN 61 YELLOW 208V-1
J14 — CHAN 62 YELLOW 208V-2
J15 — CHAN 63 YELLOW 208V-3

-3	-2	-1	REF DESIGNATOR	ITEM NO.	DESCRIPTION	MAT'L. DWG NO./BNL NO.
QTY REQD						

INTERPRET IN GENERAL ACCORDANCE WITH ASME Y14.24M-1989
UNLESS OTHERWISE SPECIFIED DIMENSIONS ARE IN INCHES
DECIMAL TOLERANCES .X ±.030 .XX ±.015 .XXX ±.005
ANGULAR TOLERANCE ± .5°
FINISH: NA
BREAK SHARP EDGES MAX. XX MIN. XX
OUTSTANDING ECN

Q.A. CATEGORY A-3		DATE
DRAWN BY	Ed Koropsak	10/16/98
CHECKED BY		
DESIGN APPROVAL		
ENGINEER APPROVAL	R. MICHNOFF	10/16/98
SUPVR. APPROVAL		

NEXT ASSEMBLY

BROOKHAVEN NATIONAL LABORATORY
UPTON, N.Y. 11973
RHIC CONTROLS WIRING DIAGRAM
BLDG. 1004B MADC READBACKS
DX Heater, VAC., TEMP.,VOLTAGE

SIZE D — DRAWING NUMBER 94028529 — REV. A
MATERIAL: ——— SCALE: NA WEIGHT: – SHEET 100

*AUTOCAD

REV.	ZONE	ECN NO.	DATE	BY	CKR	APP.

Controls, bnl 5/3/2004 3:34 PM 8529_102.dwg

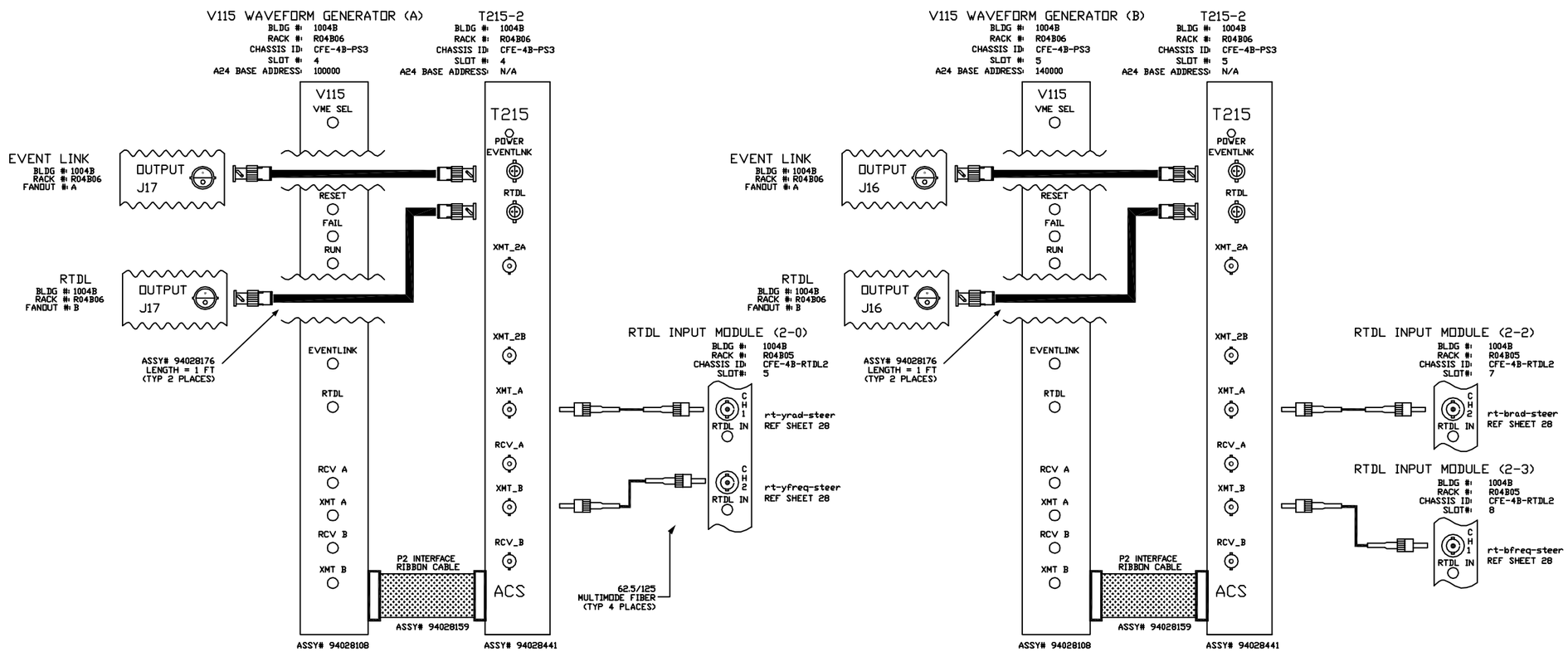

V115 JUMPER LIST
JP3=IN JP4=IN JP1=OUT JP2=OUT
A24 BASE ADDRESS JB1-A23=IN JB1-A22=IN JB1-A21=IN JB1-A20=OUT JB1-A19=IN JB1-A18=IN

V115 JUMPER LIST
JP3=IN JP4=IN JP1=OUT JP2=OUT
A24 BASE ADDRESS JB1-A23=IN JB1-A22=IN JB1-A21=IN JB1-A20=OUT JB1-A19=IN JB1-A18=OUT

-3	-2	-1	REF DESIGNATOR	ITEM NO.	DESCRIPTION	MAT'L DWG NO./ENG. NO.
QTY REQD						

INTERPRET IN GENERAL ACCORDANCE WITH ASME Y14.24M-1989

UNLESS OTHERWISE SPECIFIED DIMENSIONS ARE IN INCHES

DECIMAL TOLERANCES
.X ±.030
.XX ±.015
.XXX ±.005
ANGULAR TOLERANCE ± .5°

NA FINISH

BREAK SHARP EDGES
MAX. XX MIN. XX

OUTSTANDING ECN

Q.A. CATEGORY A-3

		DATE
DRAWN BY	Ed Koropsak	1/5/99
CHECKED BY		
DESIGN APPROVAL		
ENGINEER APPROVAL	R.MICHNOFF	1/5/99
SUPVR. APPROVAL		

NEXT ASSEMBLY

BROOKHAVEN NATIONAL LABORATORY
UPTON, N.Y. 11973

RHIC CONTROLS WIRING DIAGRAM
BLDG. 1004B, CFE-4B-PS3
RTDL INPUTS rad, freq-steer

SIZE D
94028529
DRAWING NUMBER
REV. A

MATERIAL: ——— SCALE: NA WEIGHT: – SHEET 102 /108

1 *AUTOCAD

Controls, bnl 5/3/2004 3:38 PM 8529_103.dwg

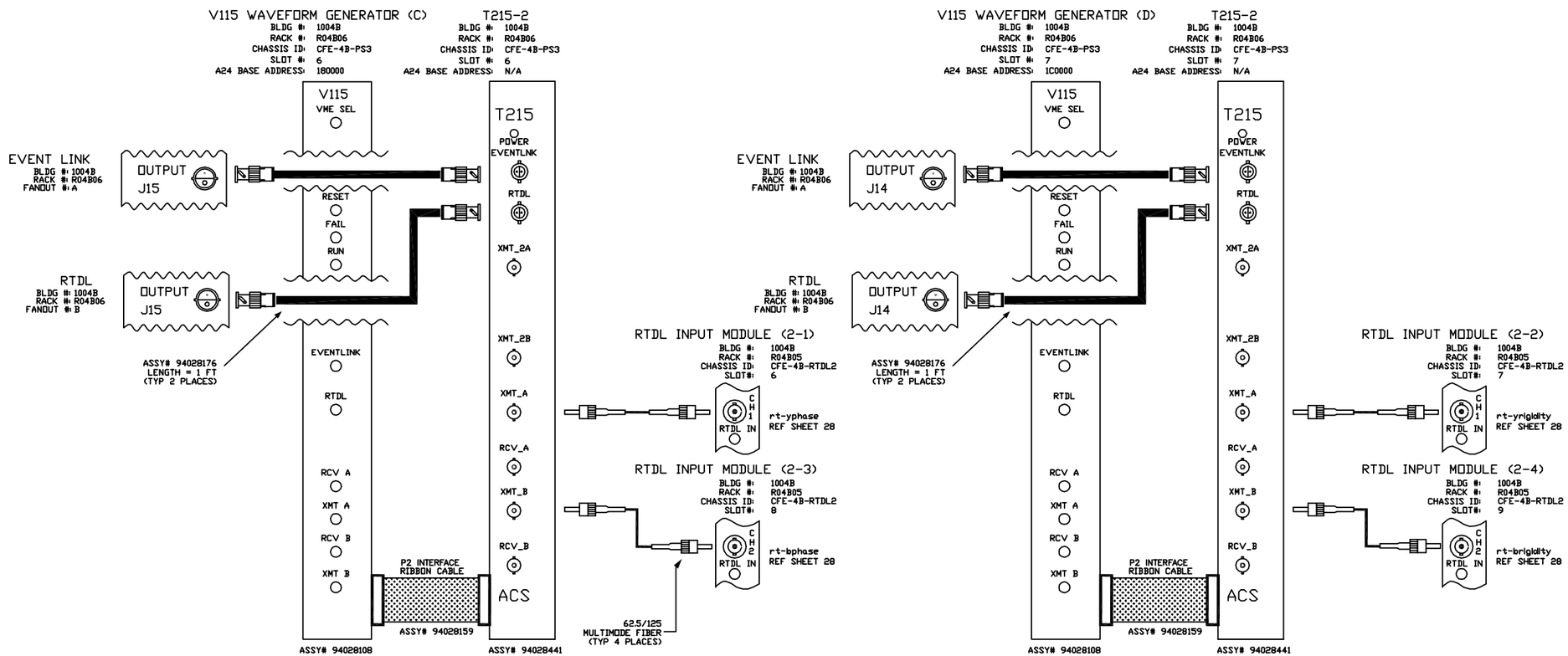

V115 JUMPER LIST
JP3=IN JP4=IN JP1=OUT JP2=OUT
A24 BASE ADDRESS JB1-A23=IN JB1-A22=IN JB1-A21=IN JB1-A20=OUT JB1-A19=OUT JB1-A18=IN

V115 JUMPER LIST
JP3=IN JP4=IN JP1=OUT JP2=OUT
A24 BASE ADDRESS JB1-A23=IN JB1-A22=IN JB1-A21=IN JB1-A20=OUT JB1-A19=OUT JB1-A18=OUT

-3	-2	-1	REF DESIGNATOR	ITEM NO.	DESCRIPTION	MAT'L DWG NO./SPEC NO.
QTY REQD						

INTERPRET IN GENERAL ACCORDANCE WITH ASME Y14.24M-1989

UNLESS OTHERWISE SPECIFIED DIMENSIONS ARE IN INCHES

DECIMAL TOLERANCES
.X ±.030
.XX ±.015
.XXX ±.005
ANGULAR TOLERANCE
± .5°

FINISH: NA

BREAK SHARP EDGES
MAX. XX MIN. XX

OUTSTANDING ECN

Q.A. CATEGORY A-3

		DATE
DRAWN BY	Ed Koropsak	1/5/99
CHECKED BY		
DESIGN APPROVAL		
ENGINEER APPROVAL	R.MICHNOFF	1/5/99
SUPVR. APPROVAL		

NEXT ASSEMBLY

BROOKHAVEN NATIONAL LABORATORY
UPTON, N.Y. 11973

RHIC CONTROLS WIRING DIAGRAM
BLDG. 1004B, CFE-4B-PS3
RTDL INPUTS phase, rigidity

SIZE D | DRAWING NUMBER 94028529 | REV. A

MATERIAL: ——— SCALE: NA WEIGHT: – SHEET 103

*AUTOCAD

REV.	ZONE	ECN NO.	DATE	BY	CKR	APP.

Controls, bnl 5/4/2004 8:13 AM 8529_104.dwg

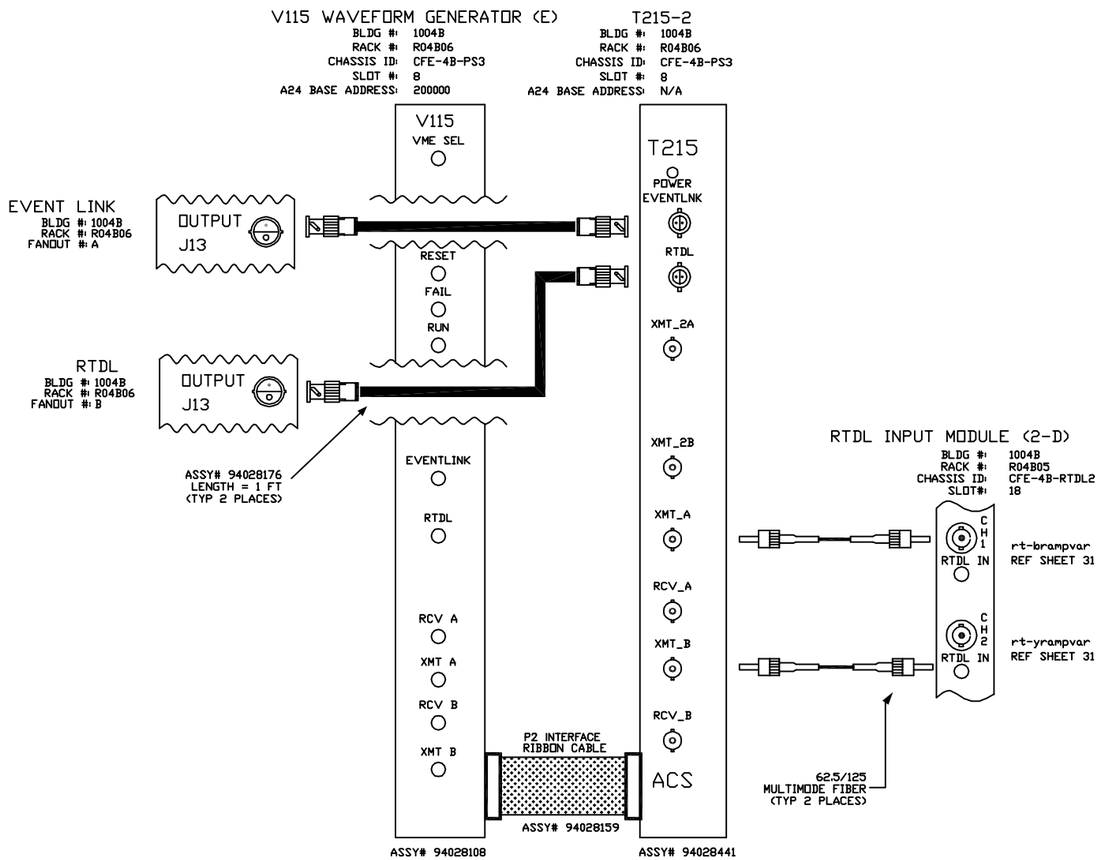

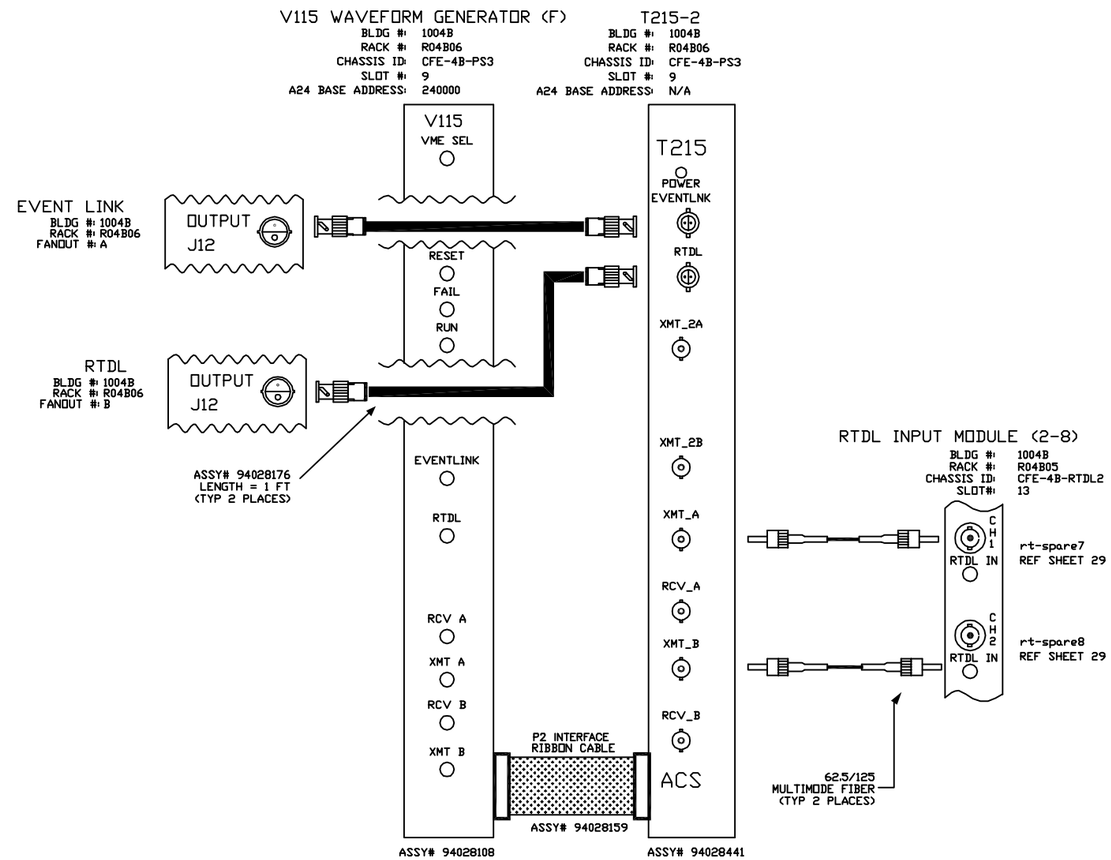

V115 JUMPER LIST
JP3=IN JP4=IN JP1=OUT JP2=OUT
A24 BASE ADDRESS JB1-A23=IN JB1-A22=IN JB1-A21=OUT JB1-A20=IN JB1-A19=IN JB1-A18=IN

V115 JUMPER LIST
JP3=IN JP4=IN JP1=OUT JP2=OUT
A24 BASE ADDRESS JB1-A23=IN JB1-A22=IN JB1-A21=OUT JB1-A20=IN JB1-A19=IN JB1-A18=OUT

-3	-2	-1	REF DESIGNATOR	ITEM NO.	DESCRIPTION	MAT'L DWG NO./PHL NO.
QTY REQD						

INTERPRET IN GENERAL ACCORDANCE WITH ASME Y14.24M-1989

UNLESS OTHERWISE SPECIFIED DIMENSIONS ARE IN INCHES

DECIMAL TOLERANCES
.X ±.030
.XX ±.015
.XXX ±.005
ANGULAR TOLERANCE
± .5°

OUTSTANDING ECN

NA FINISH

BREAK SHARP EDGES
MAX. XX MIN. XX

Q.A. CATEGORY A-3		DATE
DRAWN BY	Ed Koropsak	1/5/99
CHECKED BY		
DESIGN APPROVAL		
ENGINEER APPROVAL	R.MICHNOFF	1/5/99
SUPVR. APPROVAL		
NEXT ASSEMBLY		

BROOKHAVEN NATIONAL LABORATORY
UPTON, N.Y. 11973

RHIC CONTROLS WIRING DIAGRAM
BLDG. 1004B, CFE-4B-PS3

RTDL INPUTS rampvar,spare7 & 8

SIZE D | DRAWING NUMBER 94028529 | REV. A

MATERIAL: ——— | SCALE: NA | WEIGHT: – | SHEET 104

*AUTOCAD

Controls, bnl 5/4/2004 8:47 AM 8529_105.dwg

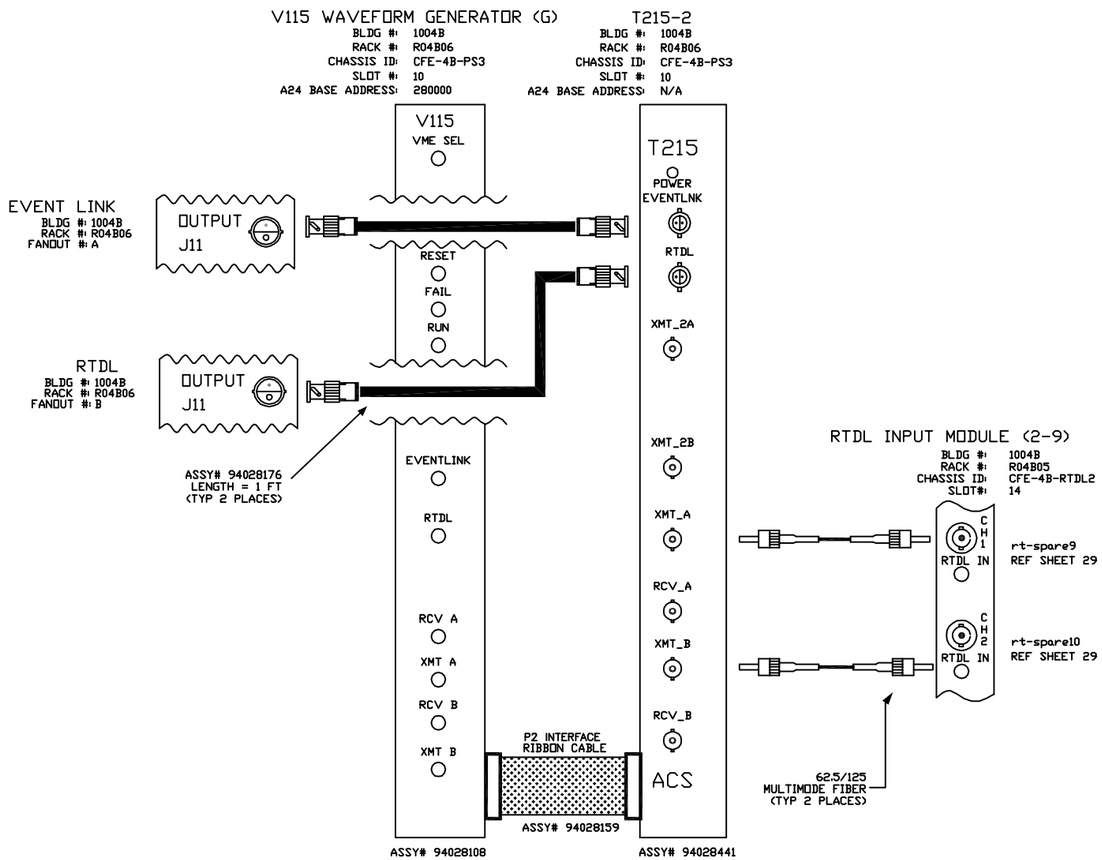

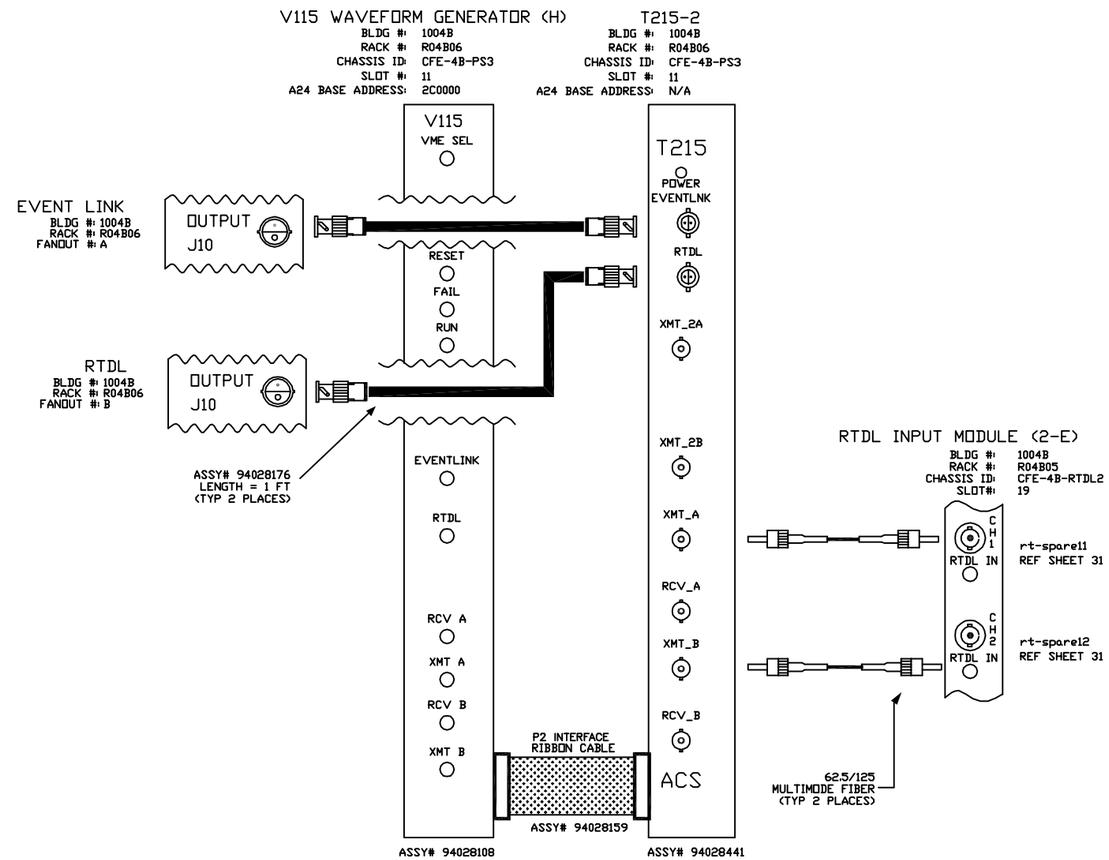

V115 JUMPER LIST
JP3=IN JP4=IN JP1=OUT JP2=OUT
A24 BASE ADDRESS JB1-A23=IN JB1-A22=IN JB1-A21=OUT JB1-A20=IN JB1-A19=OUT JB1-A18=IN

V115 JUMPER LIST
JP3=IN JP4=IN JP1=OUT JP2=OUT
A24 BASE ADDRESS JB1-A23=IN JB1-A22=IN JB1-A21=OUT JB1-A20=IN JB1-A19=OUT JB1-A18=OUT

REV.	ZONE	ECN NO.	DATE	BY	CKR	APP.

-3	-2	-1	REF DESIGNATOR	ITEM NO.	DESCRIPTION	MAT'L DWG NO./BHL NO.
QTY REQD						

INTERPRET IN GENERAL ACCORDANCE WITH ASME Y14.24M-1989

UNLESS OTHERWISE SPECIFIED DIMENSIONS ARE IN INCHES

DECIMAL TOLERANCES
.X ±.030
.XX ±.015
.XXX ±.005
ANGULAR TOLERANCE
± .5°

OUTSTANDING ECN

NA FINISH

BREAK SHARP EDGES
MAX. XX MIN. XX

Q.A. CATEGORY A-3		DATE
DRAWN BY	Ed Koropsak	8/2799
CHECKED BY		
DESIGN APPROVAL		
ENGINEER APPROVAL	R.MICHNOFF	8/27/99
SUPVR. APPROVAL		

NEXT ASSEMBLY

BROOKHAVEN NATIONAL LABORATORY
UPTON, N.Y. 11973

RHIC CONTROLS WIRING DIAGRAM
BLDG. 1004B, CFE-4B-PS3

RTDL INPUTS spare9, 10, 11 & 12

SIZE D — DRAWING NUMBER 94028529 — REV. A

MATERIAL: ——— SCALE: NA WEIGHT: – SHEET 105

*AUTOCAD

REV.	ZONE	ECN NO.	DATE	BY	CKR	APP.

ACS, BNL 1/28/00 3:21 PM 8529_106.dwg

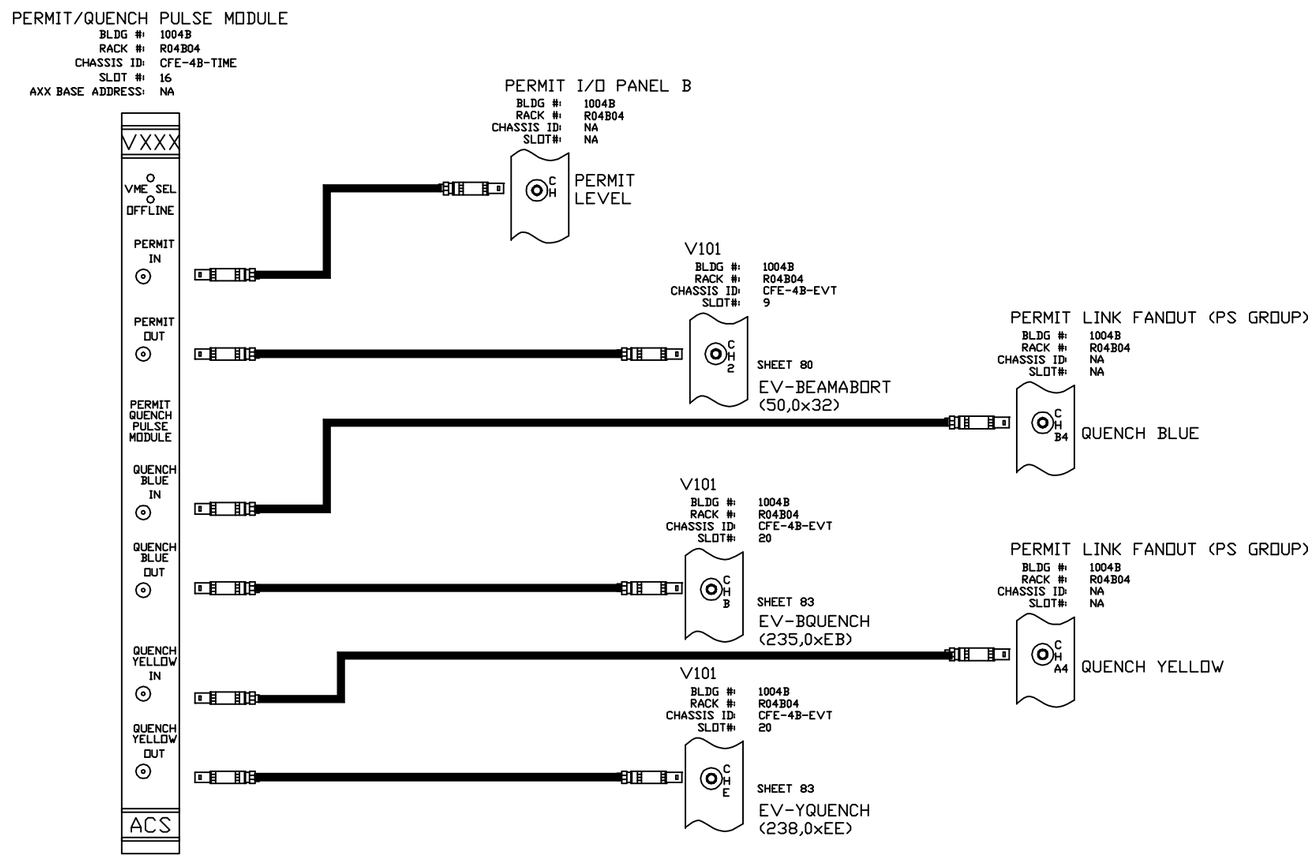

-3	-2	-1	REF DESIGNATOR	ITEM NO.	DESCRIPTION	MAT'L DWG NO./DWG. NO.
QTY REQD						

INTERPRET IN GENERAL ACCORDANCE WITH ASME Y14.24M-1989

UNLESS OTHERWISE SPECIFIED DIMENSIONS ARE IN INCHES

DECIMAL TOLERANCES
.X ±.030
.XX ±.015
.XXX ±.005
ANGULAR TOLERANCE ± .5°

OUTSTANDING ECN

NA FINISH

BREAK SHARP EDGES
MAX. XX MIN. XX

Q.A. CATEGORY A-3		DATE
DRAWN BY	Ed Koropsak	9/7/99
CHECKED BY		
DESIGN APPROVAL		
ENGINEER APPROVAL	R. MICHNOFF	9/7/99
SUPVR. APPROVAL		

NEXT ASSEMBLY

BROOKHAVEN NATIONAL LABORATORY
UPTON, N.Y. 11973

RHIC CONTROLS WIRING DIAGRAM

BLDG. 1004B, RACK R04B04

QUENCH/PERMIT DETECT CIRCUIT

SIZE D | DRAWING NUMBER 94028529 | REV. A

MATERIAL: ——— SCALE: NA WEIGHT: – SHEET 106 /108

1 *AUTOCAD

REV.	ZONE	ECN NO.	DATE	BY	CKR	APP.

Controls, bnl 5/4/2004 8:51 AM 8529_107.dwg

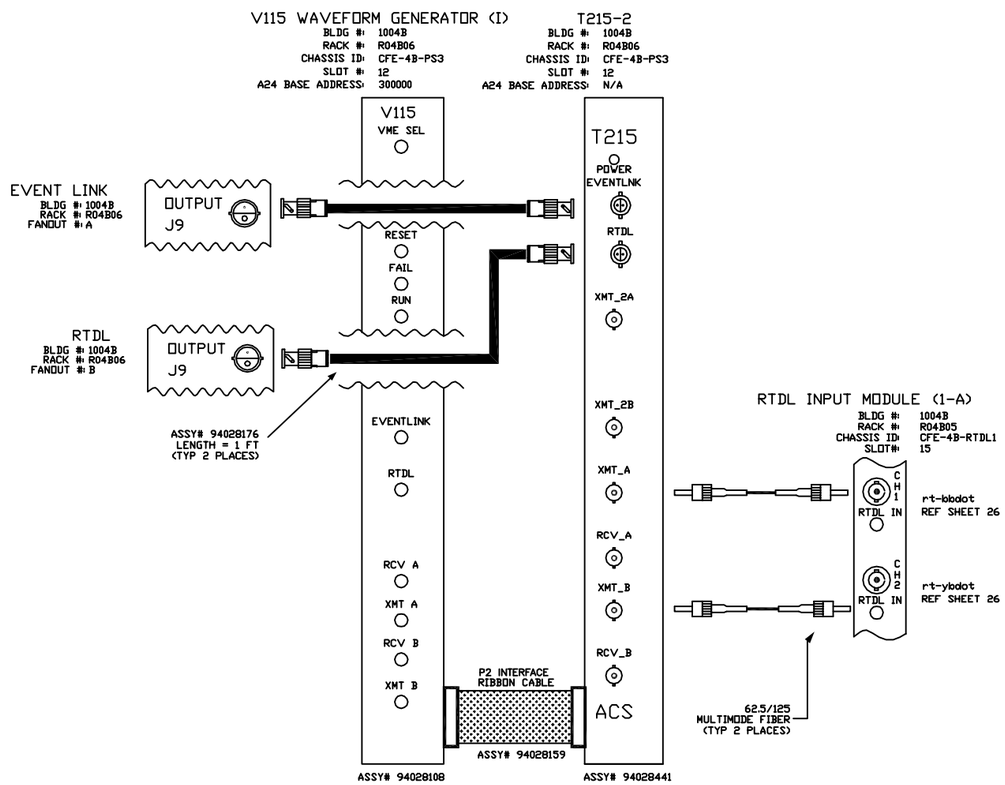

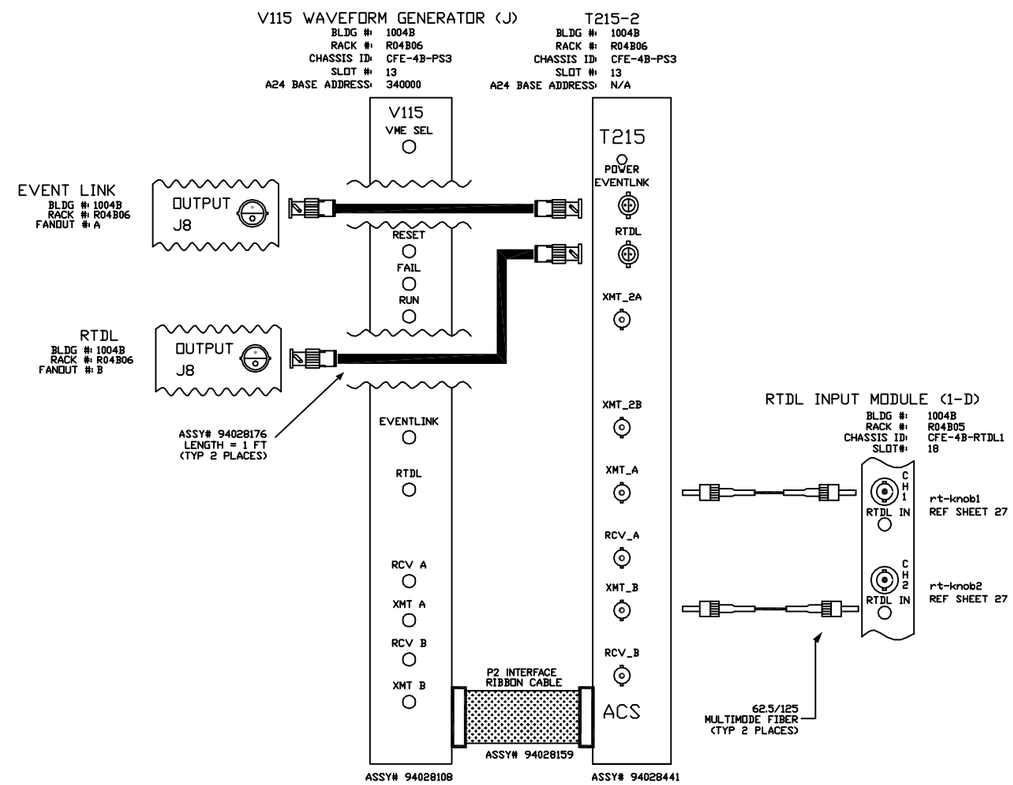

V115 JUMPER LIST
JP3=IN JP4=IN JP1=OUT JP2=OUT
A24 BASE ADDRESS JB1-A23=IN JB1-A22=IN JB1-A21=OUT JB1-A20=OUT JB1-A19=IN JB1-A18=IN

V115 JUMPER LIST
JP3=IN JP4=IN JP1=OUT JP2=OUT
A24 BASE ADDRESS JB1-A23=IN JB1-A22=IN JB1-A21=OUT JB1-A20=OUT JB1-A19=IN JB1-A18=OUT

-3	-2	-1	REF DESIGNATOR	ITEM NO.	DESCRIPTION	MAT'L DWG NO./ENG. NO.
QTY REQD						

INTERPRET IN GENERAL ACCORDANCE WITH ASME Y14.24M-1989

UNLESS OTHERWISE SPECIFIED DIMENSIONS ARE IN INCHES

DECIMAL TOLERANCES
.X ±.030
.XX ±.015
.XXX ±.005
ANGULAR TOLERANCE
± .5°

FINISH: NA

BREAK SHARP EDGES
MAX. XX MIN. XX

OUTSTANDING ECN

NEXT ASSEMBLY

Q.A. CATEGORY A-3		DATE
DRAWN BY	Ed Koropsak	8/27/99
CHECKED BY		
DESIGN APPROVAL		
ENGINEER APPROVAL	R.MICHNOFF	8/27/99
SUPVR. APPROVAL		

BROOKHAVEN NATIONAL LABORATORY
UPTON, N.Y. 11973

RHIC CONTROLS WIRING DIAGRAM
BLDG. 1004B, CFE-4B-PS3
RTDL INPUTS y&b bdot,knob1&2

SIZE D | DRAWING NUMBER 94028529 | REV. A

MATERIAL: ——— SCALE: NA WEIGHT: – SHEET 107

*AUTOCAD

REV.	ZONE	ECN NO.	DATE	BY	CKR	APP.

Controls, bnl 5/4/2004 8:53 AM 8529_108.dwg

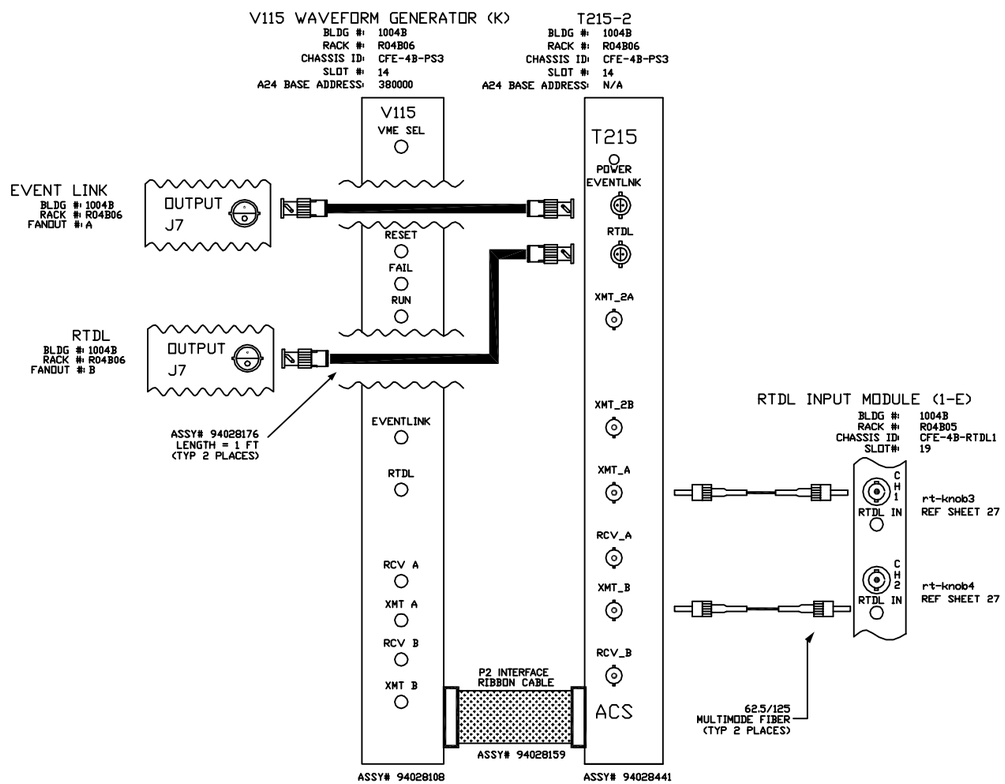

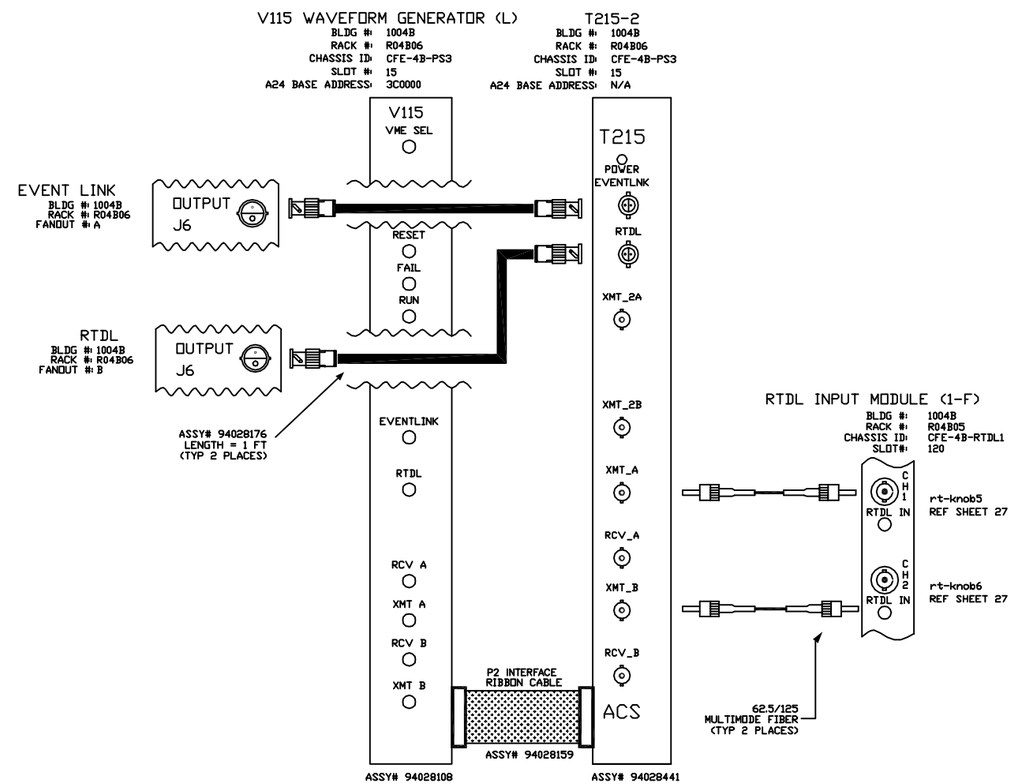

V115 JUMPER LIST
JP3=IN JP4=IN JP1=OUT JP2=OUT
A24 BASE ADDRESS JB1-A23=IN JB1-A22=IN JB1-A21=OUT JB1-A20=OUT JB1-A19=OUT JB1-A18=IN

V115 JUMPER LIST
JP3=IN JP4=IN JP1=OUT JP2=OUT
A24 BASE ADDRESS JB1-A23=IN JB1-A22=IN JB1-A21=OUT JB1-A20=OUT JB1-A19=OUT JB1-A18=OUT

-3	-2	-1	REF DESIGNATOR	ITEM NO.	DESCRIPTION	MAT'L DWG NO./ENG. NO.
QTY REQD						

INTERPRET IN GENERAL ACCORDANCE WITH ASME Y14.24M-1989

UNLESS OTHERWISE SPECIFIED DIMENSIONS ARE IN INCHES

DECIMAL TOLERANCES
.X ±.030
.XX ±.015
.XXX ±.005
ANGULAR TOLERANCE
± .5°

FINISH: NA

BREAK SHARP EDGES
MAX. XX MIN. XX

OUTSTANDING ECN

Q.A. CATEGORY A-3

		DATE
DRAWN BY	Ed Koropsak	8/27/99
CHECKED BY		
DESIGN APPROVAL		
ENGINEER APPROVAL	R.MICHNOFF	8/27/99
SUPVR. APPROVAL		

NEXT ASSEMBLY

BROOKHAVEN NATIONAL LABORATORY
UPTON, N.Y. 11973

RHIC CONTROLS WIRING DIAGRAM
BLDG. 1004B, CFE-4B-PS3
RTDL INPUTS knob 3 ,4,5 & 6

SIZE D | DRAWING NUMBER 94028529 | REV. A

MATERIAL: ——— SCALE: NA WEIGHT: – SHEET 108

*AUTOCAD

REV.	ZONE	ECN NO.	DATE	BY	CKR	APP.

Controls, bnl 5/4/2004 8:56 AM 8529_109.dwg

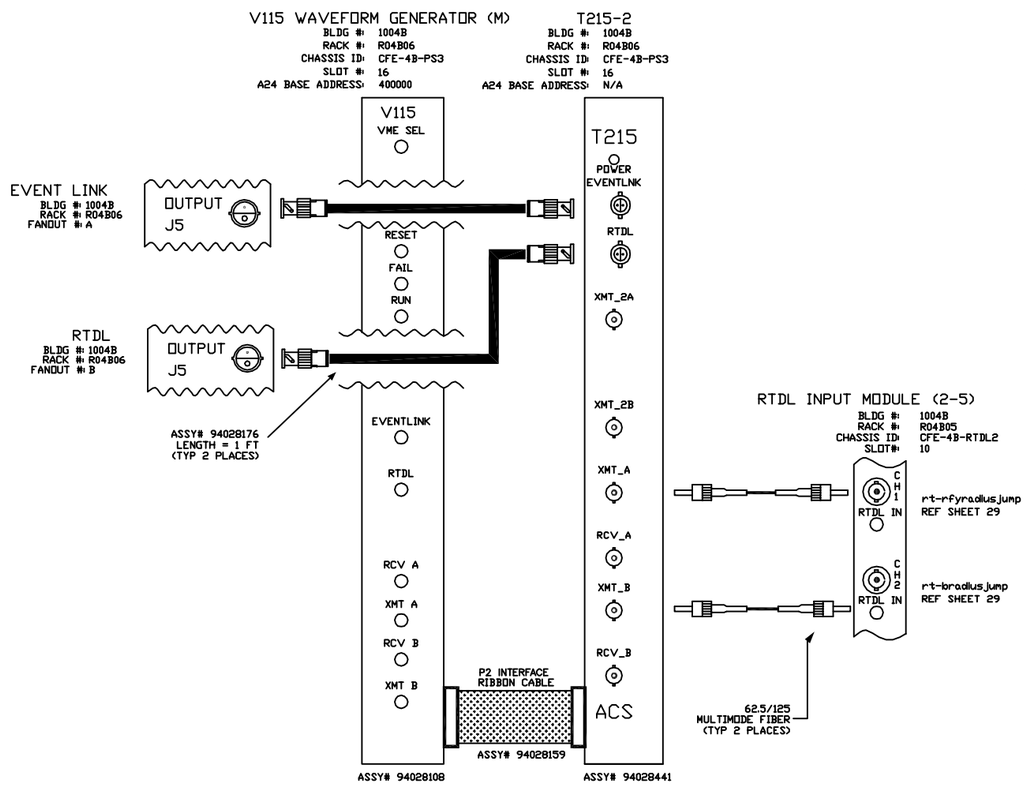

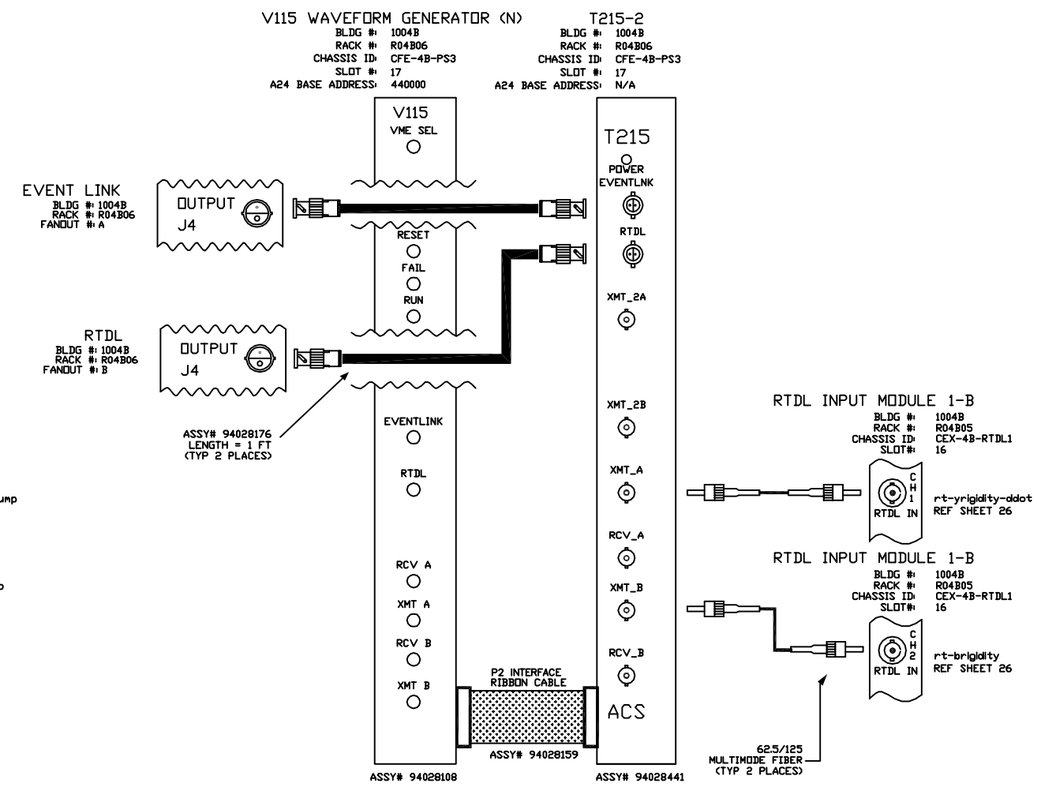

V115 JUMPER LIST
JP3=IN JP4=IN JP1=OUT JP2=OUT
A24 BASE ADDRESS JB1-A23=IN JB1-A22=OUT JB1-A21=IN JB1-A20=IN JB1-A19=IN JB1-A18=IN

V115 JUMPER LIST
JP3=IN JP4=IN JP1=OUT JP2=OUT
A24 BASE ADDRESS JB1-A23=IN JB1-A22=OUT JB1-A21=IN JB1-A20=IN JB1-A19=IN JB1-A18=OUT

-3	-2	-1	REF DESIGNATOR	ITEM NO.	DESCRIPTION	MAT'L DWG NO./ENG. NO.
QTY REQD						

INTERPRET IN GENERAL ACCORDANCE WITH ASME Y14.24M-1989
UNLESS OTHERWISE SPECIFIED DIMENSIONS ARE IN INCHES
DECIMAL TOLERANCES .X ±.030 .XX ±.015 .XXX ±.005
ANGULAR TOLERANCE ± .5°
FINISH NA
BREAK SHARP EDGES MAX. XX MIN. XX
OUTSTANDING ECN

Q.A. CATEGORY A-3

		DATE
DRAWN BY	Ed Koropsak	2/10/00
CHECKED BY		
DESIGN APPROVAL		
ENGINEER APPROVAL	R.MICHNOFF	2/10/00
SUPVR. APPROVAL		

NEXT ASSEMBLY

BROOKHAVEN NATIONAL LABORATORY
UPTON, N.Y. 11973

RHIC CONTROLS WIRING DIAGRAM
BLDG. 1004B, CFE-4B-PS3
RTDL INPUTS y & b radiusjump

SIZE D | DRAWING NUMBER 94028529 | REV. A
MATERIAL: ——— SCALE: NA WEIGHT: – SHEET 109

*AUTOCAD

Controls, bnl 5/4/2004 9:03 AM 8529_110.dwg

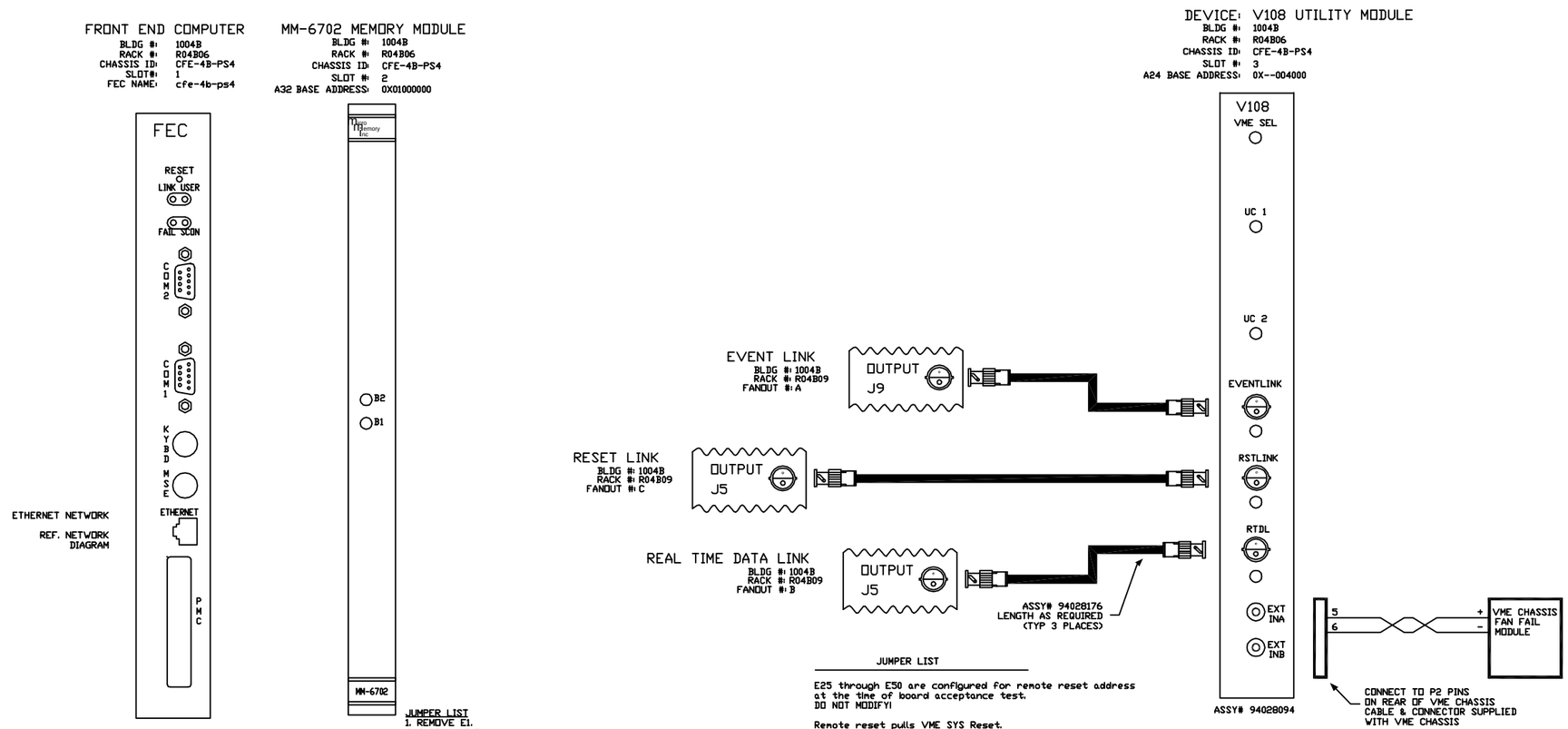

JUMPER LIST
1. REMOVE E1.
2. INSTALL E15.
3. SW3 CLOSE ALL POSITIONS.
4. SW2 CLOSE POSITIONS 7 AND 8.
5. SW1 CLOSE POSITIONS 2-8.
6. INSTALL E14 AND E25 TO ENABLE BATTERIES

JUMPER LIST

E25 through E50 are configured for remote reset address at the time of board acceptance test.
DO NOT MODIFY!

Remote reset pulls VME SYS Reset.
E58-E60, E59-E61

A24 BASE ADDRESS= 4000h
E57-E13, E2-E14, E3-E15, E4-E16, E5-E17, E6-E18
E7-E19, E8-E20, E9-E21, E10-E22, E11-E24, E57-E23
SW1=OPEN
SW2=CLOSED
SW3=OPEN
SW4=OPEN

REV.	ZONE	ECN NO.	DATE	BY	CKR	APP.

QTY REQD -3	QTY REQD -2	QTY REQD -1	REF DESIGNATOR	ITEM NO.	DESCRIPTION	MAT'L DWG NO./BNL NO.

INTERPRET IN GENERAL ACCORDANCE WITH ASME Y14.24M-1989
UNLESS OTHERWISE SPECIFIED DIMENSIONS ARE IN INCHES
DECIMAL TOLERANCES .X ±.030 .XX ±.015 .XXX ±.005
ANGULAR TOLERANCE ± .5°
NA FINISH
BREAK SHARP EDGES MAX. XX MIN. XX
OUTSTANDING ECN

Q.A. CATEGORY A-3		DATE	
DRAWN BY	Ed Koropsak	5/9/00	
CHECKED BY			
DESIGN APPROVAL			
ENGINEER APPROVAL	R. MICHNOFF	5/9/00	
SUPVR. APPROVAL			

NEXT ASSEMBLY

BROOKHAVEN NATIONAL LABORATORY
UPTON, N.Y. 11973
RHIC CONTROLS WIRING DIAGRAM
1004B, VME CHASSIS CFE-4B-PS4
FT END COMP/V108 UTIL MODULE
SIZE D
94028529
DRAWING NUMBER
REV. A
MATERIAL: ——— SCALE: NA WEIGHT: - SHEET 110

*AUTOCAD

REV.	ZONE	ECN NO.	DATE	BY	CKR	APP.

BNL, BNL 5/9/00 11:25 AM 8529_111.dwg

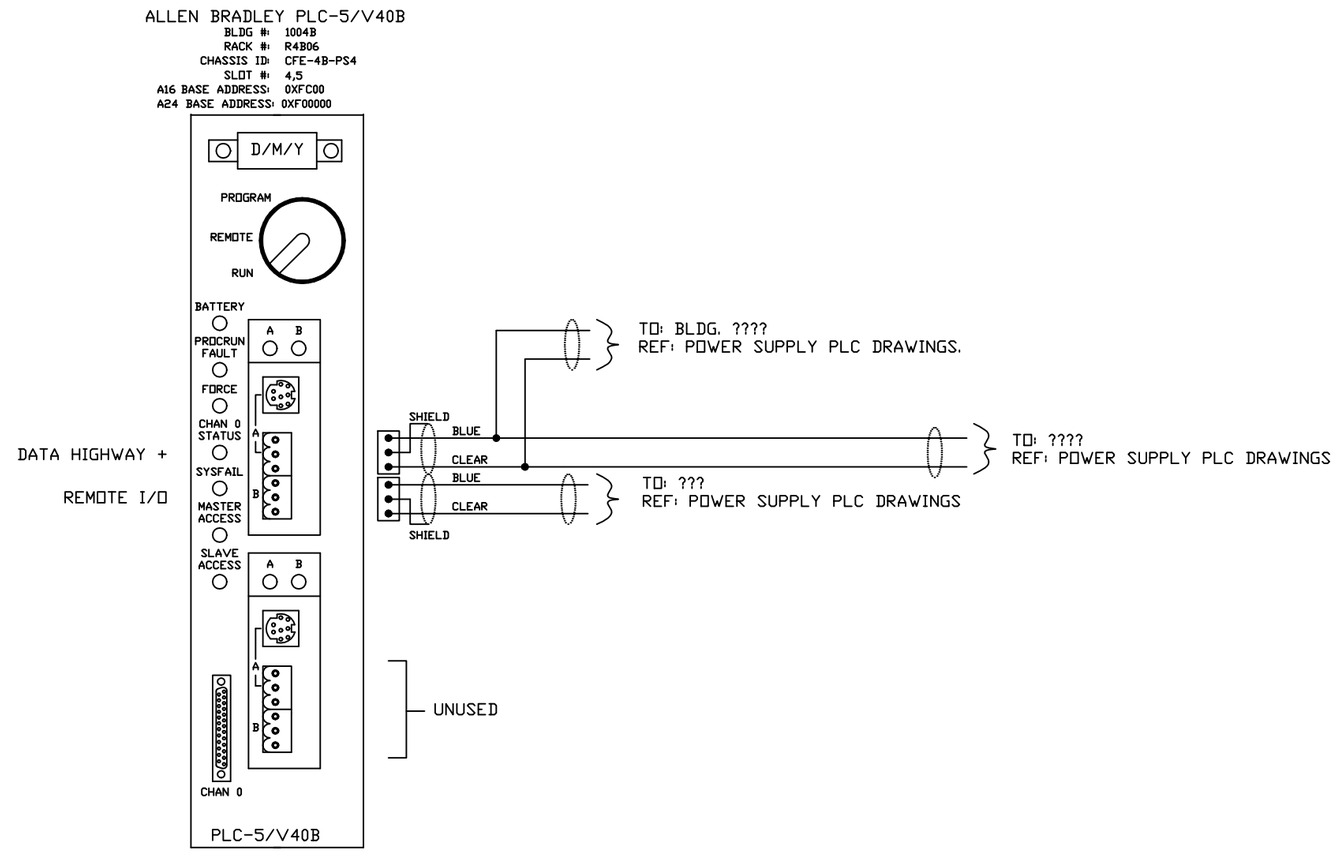

-3	-2	-1	REF DESIGNATOR	ITEM NO.	DESCRIPTION	MAT'L DWG NO./INL NO.
QTY REQD						

INTERPRET IN GENERAL ACCORDANCE WITH ASME Y14.24M-1989

UNLESS OTHERWISE SPECIFIED DIMENSIONS ARE IN INCHES

DECIMAL TOLERANCES
.X ±.030
.XX ±.015
.XXX ±.005
ANGULAR TOLERANCE
± .5°

NA FINISH

BREAK SHARP EDGES
MAX. XX MIN. XX

OUTSTANDING ECN

Q.A. CATEGORY A-3		DATE
DRAWN BY	Ed Koropsak	5/9/00
CHECKED BY		
DESIGN APPROVAL		
ENGINEER APPROVAL	R. MICHNOFF	5/9/00
SUPVR. APPROVAL		

NEXT ASSEMBLY

BROOKHAVEN NATIONAL LABORATORY
UPTON, N.Y. 11973

RHIC CONTROLS WIRING DIAGRAM

BLDG. 1004B, VME CHASSIS CFE-4B-PS4

ALLEN BRADLEY VME PLC-5

SIZE D | DRAWING NUMBER 94028529 | REV. A

MATERIAL: ——— SCALE: NA WEIGHT: – SHEET 111

*AUTOCAD

REV.	ZONE	ECN NO.	DATE	BY	CKR	APP.

Controls, bnl 5/4/2004 9:13 AM 8529_112.dwg

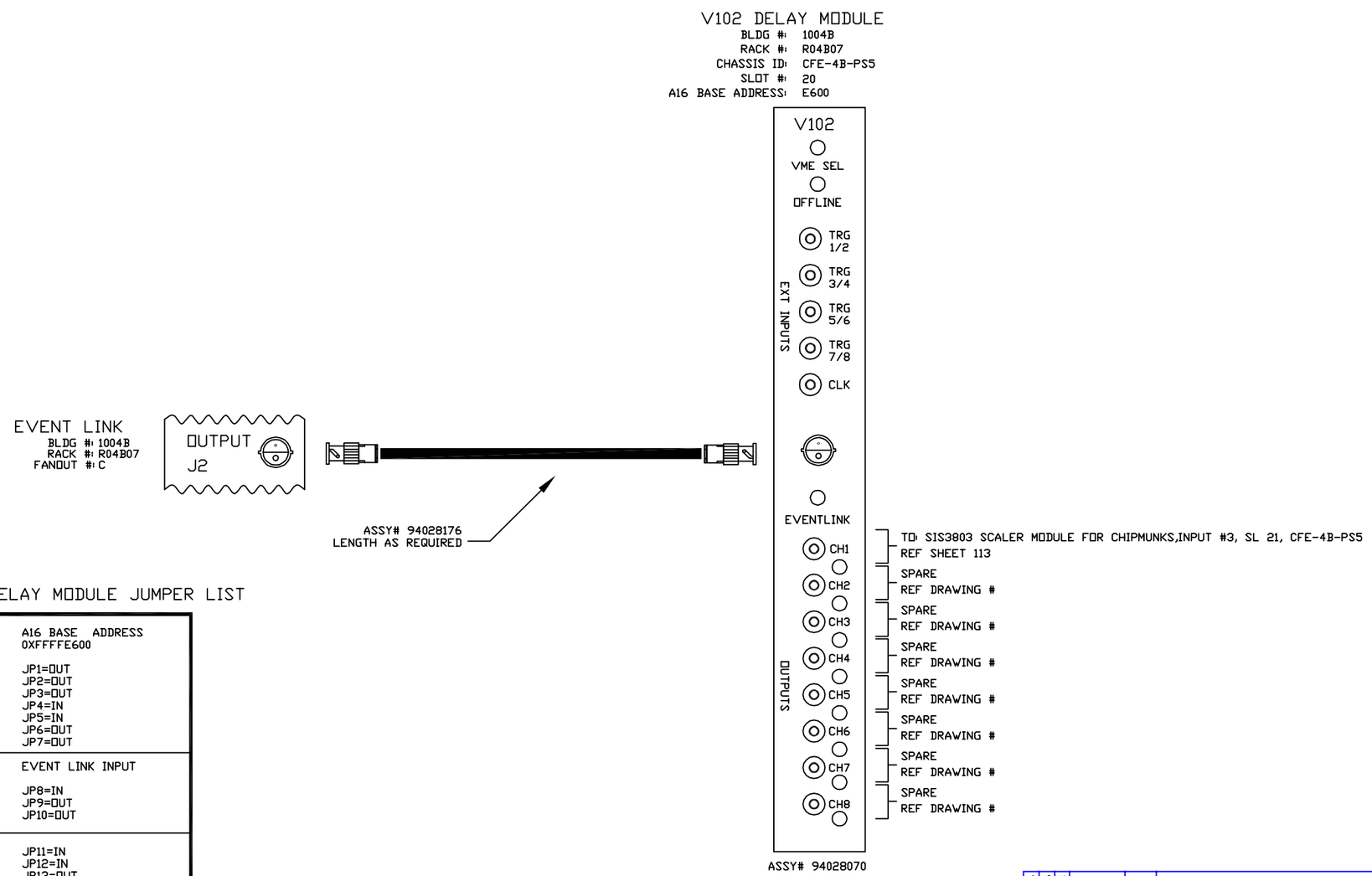

V102 DELAY MODULE JUMPER LIST

A16 BASE ADDRESS
0XFFFFE600

JP1=OUT
JP2=OUT
JP3=OUT
JP4=IN
JP5=IN
JP6=OUT
JP7=OUT

EVENT LINK INPUT

JP8=IN
JP9=OUT
JP10=OUT

JP11=IN
JP12=IN
JP13=OUT
JP14=IN

-3	-2	-1	REF DESIGNATOR	ITEM NO.	DESCRIPTION	MFG. DWG NO./SPE. NO.
QTY REQD						

INTERPRET IN GENERAL ACCORDANCE WITH ASME Y14.24M-1989

UNLESS OTHERWISE SPECIFIED DIMENSIONS ARE IN INCHES

DECIMAL TOLERANCES
.X ±.030
.XX ±.015
.XXX ±.005
ANGULAR TOLERANCE
± .5°

NA FINISH

BREAK SHARP EDGES
MAX. XX MIN. XX

OUTSTANDING ECN

Q.A. CATEGORY A-3

		DATE
DRAWN BY	Koropsak	5/4/04
CHECKED BY		
DESIGN APPROVAL		
ENGINEER APPROVAL		
SUPVR. APPROVAL		

NEXT ASSEMBLY

BROOKHAVEN NATIONAL LABORATORY
UPTON, N.Y. 11973

RHIC CONTROLS WIRING DIAGRAM
BLDG. 1004B CHASSIS CFE-4B-PS5
V102 DELAY MODULE A

SIZE D
DRAWING NUMBER 94028529
REV. A

MATERIAL: ——— SCALE: NA WEIGHT: – SHEET 112

*AUTOCAD

Controls, bnl 5/4/2004 10:40 AM 8529_113.dwg

SIS3803 SCALER
BLDG #: 1004B
RACK #: R04B07
CHASSIS ID: CFE-4B-PS5
SLOT #: 21
A32 BASE ADDRESS: 0X8383000

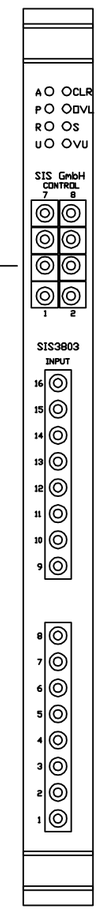

FROM V102 SLOT 20, CH 1
CFE-4B-PS5

TO:_____
TO:_____
TO:_____
TO:_____
TO:_____
TO:_____
TO:_____
TO:_____

TO:_____
TO:_____
TO:_____
TO:_____
TO:_____
TO:_____
TO:_____
TO:_____

BOARD ADDRESS JUMPERS

EN_A16:	OUT	J101-108:	IN
EN_A24:	OUT	J115:	OUT
EN_A32:	IN	J500:	IN
		J520:	IN

SW_A32U: 0
SW_A32L: 8
SW_A24U: 3
SW_A24L: 8
SW_A16U: 3

J_A11: IN

REV.	ZONE	ECN NO.	DATE	BY	CKR	APP.

-3	-2	-1	REF DESIGNATOR	ITEM NO.	DESCRIPTION	MAT'L DWG NO./BNL NO.
QTY REQD						

INTERPRET IN GENERAL ACCORDANCE WITH ASME Y14.24M-1989
UNLESS OTHERWISE SPECIFIED DIMENSIONS ARE IN INCHES
DECIMAL TOLERANCES .X ±.030 .XX ±.015 .XXX ±.005 ANGULAR TOLERANCE ± .5°
FINISH NA
BREAK SHARP EDGES MAX. XX MIN. XX
OUTSTANDING ECN
NEXT ASSEMBLY

Q.A. CATEGORY A-3
DRAWN BY Koropsak 5/4/04
CHECKED BY
DESIGN APPROVAL
ENGINEER APPROVAL
SUPVR. APPROVAL

BROOKHAVEN NATIONAL LABORATORY
UPTON, N.Y. 11973
RHIC CONTROLS WIRING DIAGRAM
BLDG. 1004B CHASSIS CFE-4B-PS5
CHIPMUNK SCALER
SIZE D
94028529
REV. A
DRAWING NUMBER
MATERIAL: ——— SCALE: NA WEIGHT: – SHEET 113

*AUTOCAD

REV.	ZONE	ECN NO.	DATE	BY	CKR	APP.

Controls, bnl 5/4/2004 10:36 AM 8529_114.dwg

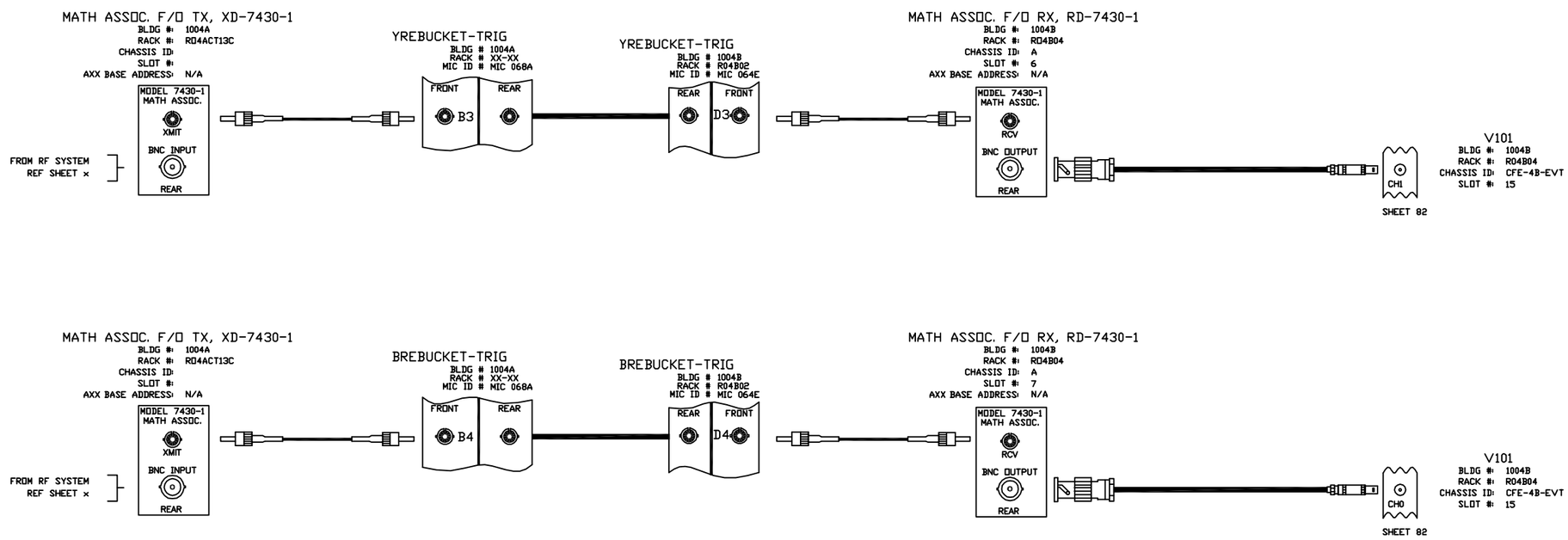

-3	-2	-1	REF DESIGNATOR	ITEM NO.	DESCRIPTION	MAT'L DWG NO./SPEC. NO.
QTY REQD						

INTERPRET IN GENERAL ACCORDANCE WITH ASME Y14.24M-1989

UNLESS OTHERWISE SPECIFIED DIMENSIONS ARE IN INCHES

DECIMAL TOLERANCES
.X ±.030
.XX ±.015
.XXX ±.005
ANGULAR TOLERANCE
± .5°

OUTSTANDING ECN

NA FINISH

BREAK SHARP EDGES
MAX. XX MIN. XX

Q.A. CATEGORY A-3		DATE
DRAWN BY	Ed Koropsak	10/16/98
CHECKED BY		
DESIGN APPROVAL		
ENGINEER APPROVAL	R. MICHNOFF	10/16/98
SUPVR. APPROVAL		

NEXT ASSEMBLY

BROOKHAVEN NATIONAL LABORATORY
UPTON, N.Y. 11973

RHIC CONTROLS WIRING DIAGRAM

BLDG. 1004B MATH ASSOC. CHASSIS A

SIZE D

DRAWING NUMBER 94028529

REV. A

MATERIAL: ——— SCALE: NA WEIGHT: – SHEET 114

1 *AUTOCAD

REV.	ZONE	ECN NO.	DATE	BY	CKR	APP.

Controls, C-AD 4/28/2004 2:07 PM 8529_119.dwg

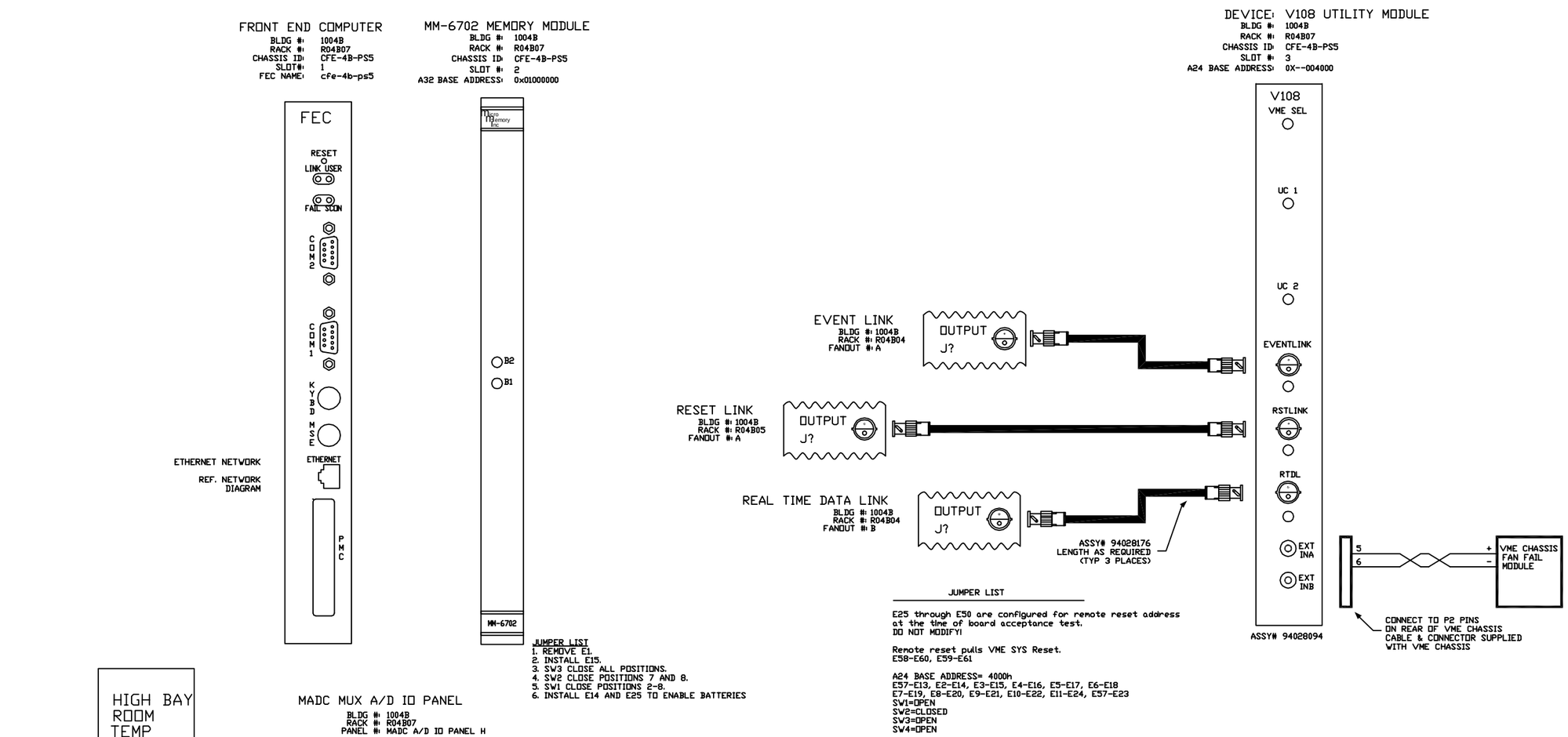

-3	-2	-1	REF DESIGNATOR	ITEM NO.	DESCRIPTION	MAT'L DWG NO./MFG. NO.
QTY REQD						

INTERPRET IN GENERAL ACCORDANCE WITH ASME Y14.24M-1989

UNLESS OTHERWISE SPECIFIED DIMENSIONS ARE IN INCHES

DECIMAL TOLERANCES
.X ±.030
.XX ±.015
.XXX ±.005
ANGULAR TOLERANCE
± .5°

NA FINISH

BREAK SHARP EDGES
MAX. XX MIN. XX

OUTSTANDING ECN

Q.A. CATEGORY A-3		DATE
DRAWN BY	Ed Koropsak	4/28/04
CHECKED BY		
DESIGN APPROVAL		
ENGINEER APPROVAL	R. MICHNOFF	4/28/04
SUPVR. APPROVAL		

NEXT ASSEMBLY

BROOKHAVEN NATIONAL LABORATORY
UPTON, N.Y. 11973

RHIC CONTROLS WIRING DIAGRAM

1004B, VME CHASSIS CFE-4B-PS5

FT END COMP/V108 UTIL MODULE

SIZE D — DRAWING NUMBER 94028529 — REV. A

MATERIAL: ——— SCALE: NA WEIGHT: – SHEET 119

1 *AUTOCAD

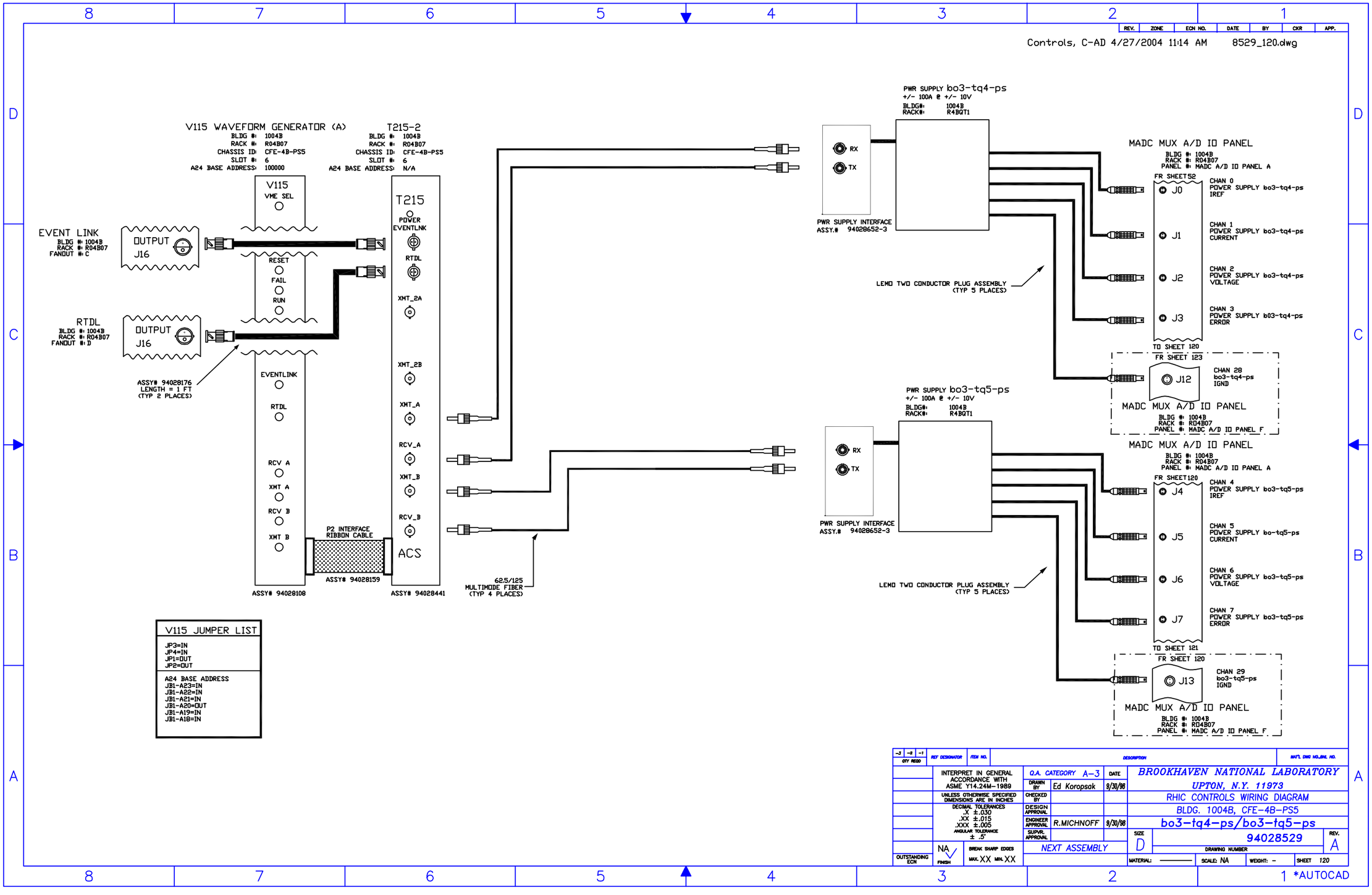

Controls, C-AD 4/27/2004 11:14 AM 8529_120.dwg
V115 WAVEFORM GENERATOR (A)
BLDG #: 1004B
RACK #: R04B07
CHASSIS ID: CFE-4B-PS5
SLOT #: 6
A24 BASE ADDRESS: 100000
T215-2
BLDG #: 1004B
RACK #: R04B07
CHASSIS ID: CFE-4B-PS5
SLOT #: 6
A24 BASE ADDRESS: N/A
V115
VME SEL
RESET
FAIL
RUN
EVENTLINK
RTDL
RCV A
XMT A
RCV B
XMT B
T215
POWER
EVENTLNK
RTDL
XMT_2A
XMT_2B
XMT_A
RCV_A
XMT_B
RCV_B
ACS
EVENT LINK
BLDG #: 1004B
RACK #: R04B07
FANOUT #: C
OUTPUT
J16
RTDL
BLDG #: 1004B
RACK #: R04B07
FANOUT #: D
OUTPUT
J16
ASSY# 94028176
LENGTH = 1 FT
(TYP 2 PLACES)
P2 INTERFACE
RIBBON CABLE
ASSY# 94028159
ASSY# 94028108
ASSY# 94028441
62.5/125
MULTIMODE FIBER
(TYP 4 PLACES)
PWR SUPPLY bo3-tq4-ps
+/- 100A @ +/- 10V
BLDG#: 1004B
RACK#: R4BQT1
RX
TX
PWR SUPPLY INTERFACE
ASSY.# 94028652-3
LEMO TWO CONDUCTOR PLUG ASSEMBLY
(TYP 5 PLACES)
MADC MUX A/D IO PANEL
BLDG #: 1004B
RACK #: R04B07
PANEL #: MADC A/D IO PANEL A
FR SHEET52
J0
CHAN 0
POWER SUPPLY bo3-tq4-ps
IREF
J1
CHAN 1
POWER SUPPLY bo3-tq4-ps
CURRENT
J2
CHAN 2
POWER SUPPLY bo3-tq4-ps
VOLTAGE
J3
CHAN 3
POWER SUPPLY bo3-tq4-ps
ERROR
TO SHEET 120
FR SHEET 123
J12
CHAN 28
bo3-tq4-ps
IGND
MADC MUX A/D IO PANEL
BLDG #: 1004B
RACK #: R04B07
PANEL #: MADC A/D IO PANEL F
PWR SUPPLY bo3-tq5-ps
+/- 100A @ +/- 10V
BLDG#: 1004B
RACK#: R4BQT1
RX
TX
PWR SUPPLY INTERFACE
ASSY.# 94028652-3
LEMO TWO CONDUCTOR PLUG ASSEMBLY
(TYP 5 PLACES)
MADC MUX A/D IO PANEL
BLDG #: 1004B
RACK #: R04B07
PANEL #: MADC A/D IO PANEL A
FR SHEET120
J4
CHAN 4
POWER SUPPLY bo3-tq5-ps
IREF
J5
CHAN 5
POWER SUPPLY bo-tq5-ps
CURRENT
J6
CHAN 6
POWER SUPPLY bo3-tq5-ps
VOLTAGE
J7
CHAN 7
POWER SUPPLY bo3-tq5-ps
ERROR
TO SHEET 121
FR SHEET 120
J13
CHAN 29
bo3-tq5-ps
IGND
MADC MUX A/D IO PANEL
BLDG #: 1004B
RACK #: R04B07
PANEL #: MADC A/D IO PANEL F
V115 JUMPER LIST
JP3=IN
JP4=IN
JP1=OUT
JP2=OUT
A24 BASE ADDRESS
JB1-A23=IN
JB1-A22=IN
JB1-A21=IN
JB1-A20=OUT
JB1-A19=IN
JB1-A18=IN
REV. ZONE ECN NO. DATE BY CKR APP.
-3 -2 -1 QTY REQD
REF DESIGNATOR
ITEM NO.
DESCRIPTION
MAT'L DWG NO./BNL NO.
INTERPRET IN GENERAL ACCORDANCE WITH ASME Y14.24M-1989
UNLESS OTHERWISE SPECIFIED DIMENSIONS ARE IN INCHES
DECIMAL TOLERANCES
.X ±.030
.XX ±.015
.XXX ±.005
ANGULAR TOLERANCE ± .5°
OUTSTANDING ECN
NA
FINISH
BREAK SHARP EDGES
MAX. XX MIN. XX
Q.A. CATEGORY A-3
DATE
DRAWN BY Ed Koropsak 9/30/98
CHECKED BY
DESIGN APPROVAL
ENGINEER APPROVAL R.MICHNOFF 9/30/98
SUPVR. APPROVAL
NEXT ASSEMBLY
BROOKHAVEN NATIONAL LABORATORY
UPTON, N.Y. 11973
RHIC CONTROLS WIRING DIAGRAM
BLDG. 1004B, CFE-4B-PS5
bo3-tq4-ps/bo3-tq5-ps
SIZE D
94028529
DRAWING NUMBER
REV. A
MATERIAL:
SCALE: NA
WEIGHT: -
SHEET 120
*AUTOCAD

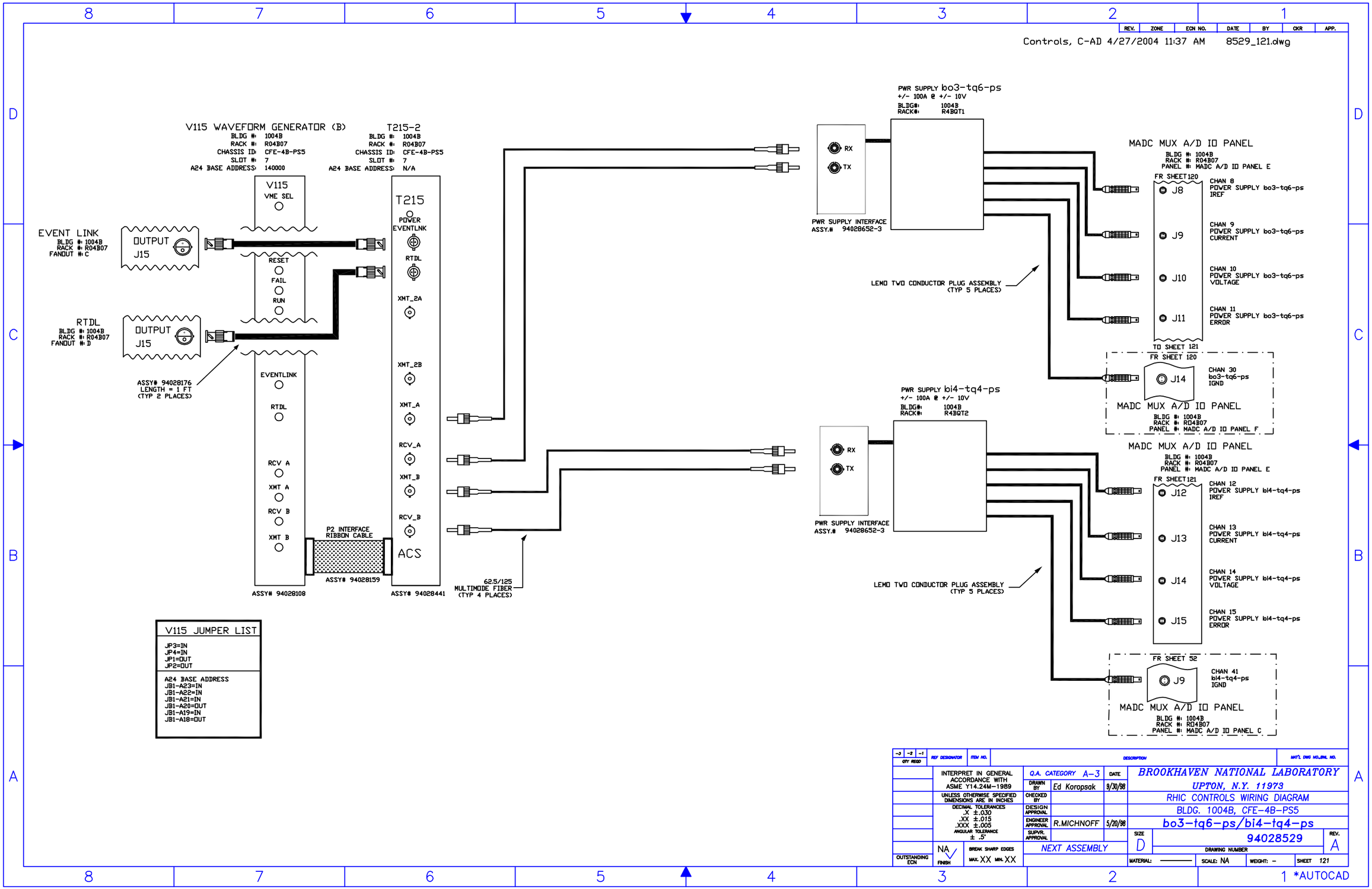

Controls, C-AD 4/27/2004 11:37 AM 8529_121.dwg
V115 WAVEFORM GENERATOR (B)
BLDG #: 1004B
RACK #: R04B07
CHASSIS ID: CFE-4B-PS5
SLOT #: 7
A24 BASE ADDRESS: 140000
T215-2
BLDG #: 1004B
RACK #: R04B07
CHASSIS ID: CFE-4B-PS5
SLOT #: 7
A24 BASE ADDRESS: N/A
V115
VME SEL
RESET
FAIL
RUN
EVENTLINK
RTDL
RCV A
XMT A
RCV B
XMT B
T215
POWER
EVENTLNK
RTDL
XMT_2A
XMT_2B
XMT_A
RCV_A
XMT_B
RCV_B
ACS
EVENT LINK
BLDG #: 1004B
RACK #: R04B07
FANOUT #: C
OUTPUT
J15
RTDL
BLDG #: 1004B
RACK #: R04B07
FANOUT #: D
OUTPUT
J15
ASSY# 94028176
LENGTH = 1 FT
(TYP 2 PLACES)
P2 INTERFACE
RIBBON CABLE
ASSY# 94028159
ASSY# 94028108
ASSY# 94028441
62.5/125
MULTIMODE FIBER
(TYP 4 PLACES)
PWR SUPPLY bo3-tq6-ps
+/- 100A @ +/- 10V
BLDG#: 1004B
RACK#: R4BQT1
RX
TX
PWR SUPPLY INTERFACE
ASSY.# 94028652-3
LEMO TWO CONDUCTOR PLUG ASSEMBLY
(TYP 5 PLACES)
MADC MUX A/D IO PANEL
BLDG #: 1004B
RACK #: R04B07
PANEL #: MADC A/D IO PANEL E
FR SHEET 120
J8
CHAN 8
POWER SUPPLY bo3-tq6-ps
IREF
J9
CHAN 9
POWER SUPPLY bo3-tq6-ps
CURRENT
J10
CHAN 10
POWER SUPPLY bo3-tq6-ps
VOLTAGE
J11
CHAN 11
POWER SUPPLY bo3-tq6-ps
ERROR
TO SHEET 121
FR SHEET 120
J14
CHAN 30
bo3-tq6-ps
IGND
MADC MUX A/D IO PANEL
BLDG #: 1004B
RACK #: R04B07
PANEL #: MADC A/D IO PANEL F
PWR SUPPLY bi4-tq4-ps
+/- 100A @ +/- 10V
BLDG#: 1004B
RACK#: R4BQT2
RX
TX
PWR SUPPLY INTERFACE
ASSY.# 94028652-3
LEMO TWO CONDUCTOR PLUG ASSEMBLY
(TYP 5 PLACES)
MADC MUX A/D IO PANEL
BLDG #: 1004B
RACK #: R04B07
PANEL #: MADC A/D IO PANEL E
FR SHEET 121
J12
CHAN 12
POWER SUPPLY bi4-tq4-ps
IREF
J13
CHAN 13
POWER SUPPLY bi4-tq4-ps
CURRENT
J14
CHAN 14
POWER SUPPLY bi4-tq4-ps
VOLTAGE
J15
CHAN 15
POWER SUPPLY bi4-tq4-ps
ERROR
FR SHEET 52
J9
CHAN 41
bi4-tq4-ps
IGND
MADC MUX A/D IO PANEL
BLDG #: 1004B
RACK #: R04B07
PANEL #: MADC A/D IO PANEL C
V115 JUMPER LIST
JP3=IN
JP4=IN
JP1=OUT
JP2=OUT
A24 BASE ADDRESS
JB1-A23=IN
JB1-A22=IN
JB1-A21=IN
JB1-A20=OUT
JB1-A19=IN
JB1-A18=OUT
REV. ZONE ECN NO. DATE BY CKR APP.
-3 -2 -1 QTY REQD
REF DESIGNATOR
ITEM NO.
DESCRIPTION
MAT'L DWG NO./BNL NO.
INTERPRET IN GENERAL ACCORDANCE WITH ASME Y14.24M-1989
UNLESS OTHERWISE SPECIFIED DIMENSIONS ARE IN INCHES
DECIMAL TOLERANCES
.X ±.030
.XX ±.015
.XXX ±.005
ANGULAR TOLERANCE ± .5°
OUTSTANDING ECN
NA
FINISH
BREAK SHARP EDGES
MAX. XX MIN. XX
Q.A. CATEGORY A-3
DATE
DRAWN BY Ed Koropsak 9/30/98
CHECKED BY
DESIGN APPROVAL
ENGINEER APPROVAL R.MICHNOFF 5/20/98
SUPVR. APPROVAL
NEXT ASSEMBLY
BROOKHAVEN NATIONAL LABORATORY
UPTON, N.Y. 11973
RHIC CONTROLS WIRING DIAGRAM
BLDG. 1004B, CFE-4B-PS5
bo3-tq6-ps/bi4-tq4-ps
SIZE D
94028529
REV. A
DRAWING NUMBER
MATERIAL:
SCALE: NA
WEIGHT: -
SHEET 121
*AUTOCAD

Controls, C-AD 4/27/2004 1:15 PM 8529_122.dwg

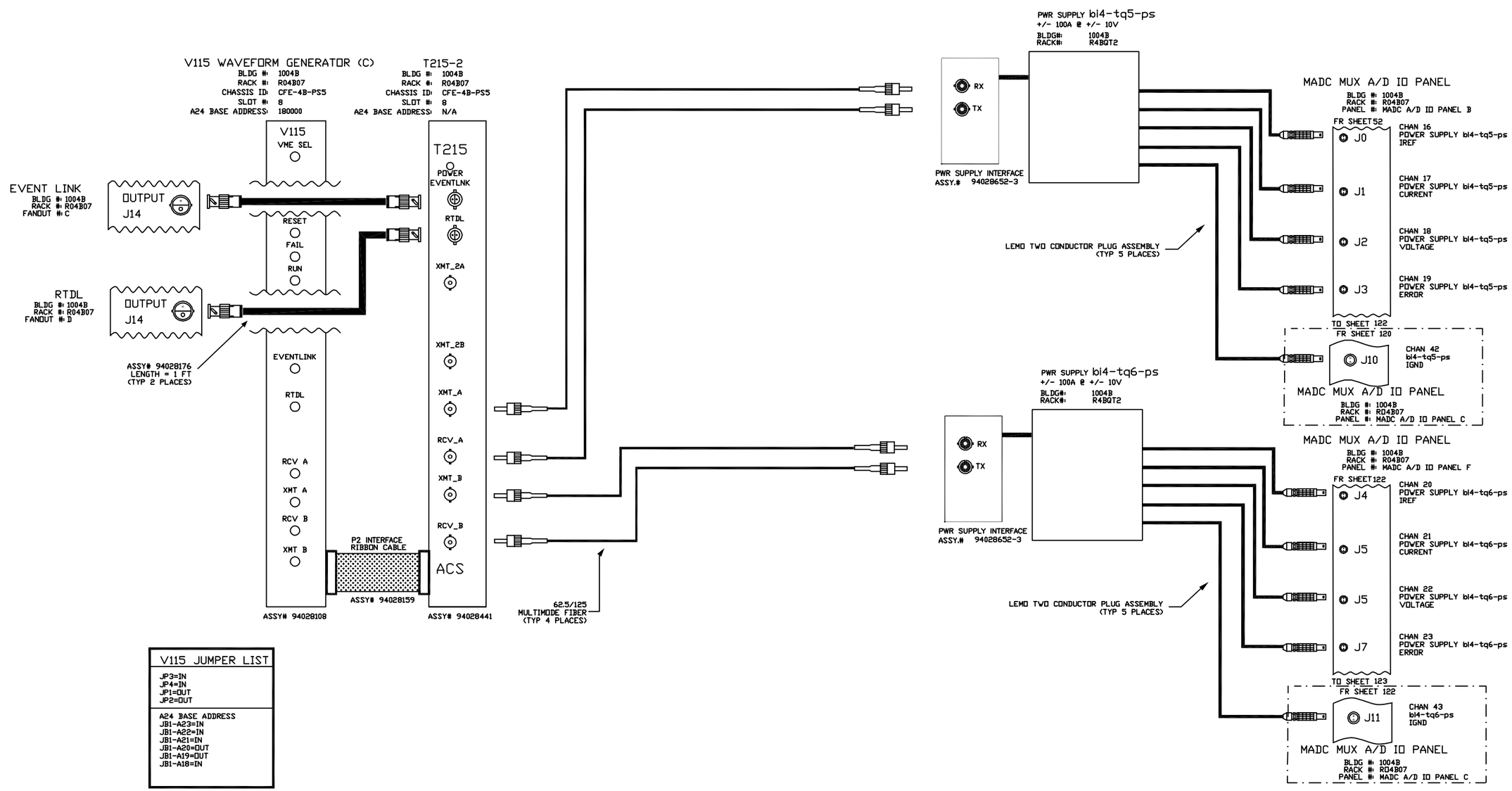

V115 JUMPER LIST
JP3=IN JP4=IN JP1=OUT JP2=OUT
A24 BASE ADDRESS JB1-A23=IN JB1-A22=IN JB1-A21=IN JB1-A20=OUT JB1-A19=OUT JB1-A18=IN

REV.	ZONE	ECN NO.	DATE	BY	CKR	APP.

-3	-2	-1	REF DESIGNATOR	ITEM NO.	DESCRIPTION	MFT'L DWG NO./BNL NO.
QTY REQD						

INTERPRET IN GENERAL ACCORDANCE WITH ASME Y14.24M-1989

UNLESS OTHERWISE SPECIFIED DIMENSIONS ARE IN INCHES

DECIMAL TOLERANCES
.X ±.030
.XX ±.015
.XXX ±.005
ANGULAR TOLERANCE
± .5°

FINISH: NA

BREAK SHARP EDGES MAX. XX MIN. XX

OUTSTANDING ECN

Q.A. CATEGORY A-3		DATE
DRAWN BY	Ed Koropsak	9/30/98
CHECKED BY		
DESIGN APPROVAL		
ENGINEER APPROVAL	R.MICHNOFF	9/30/98
SUPVR. APPROVAL		

NEXT ASSEMBLY

BROOKHAVEN NATIONAL LABORATORY
UPTON, N.Y. 11973

RHIC CONTROLS WIRING DIAGRAM

BLDG. 1004B, CFE-4B-PS5

bi4-tq5-ps/bi4-tq6-ps

SIZE D — DRAWING NUMBER 94028529 — REV. A

MATERIAL: ——— SCALE: NA WEIGHT: – SHEET 122

*AUTOCAD

Controls, C-AD 4/27/2004 1:22 PM 8529_123.dwg

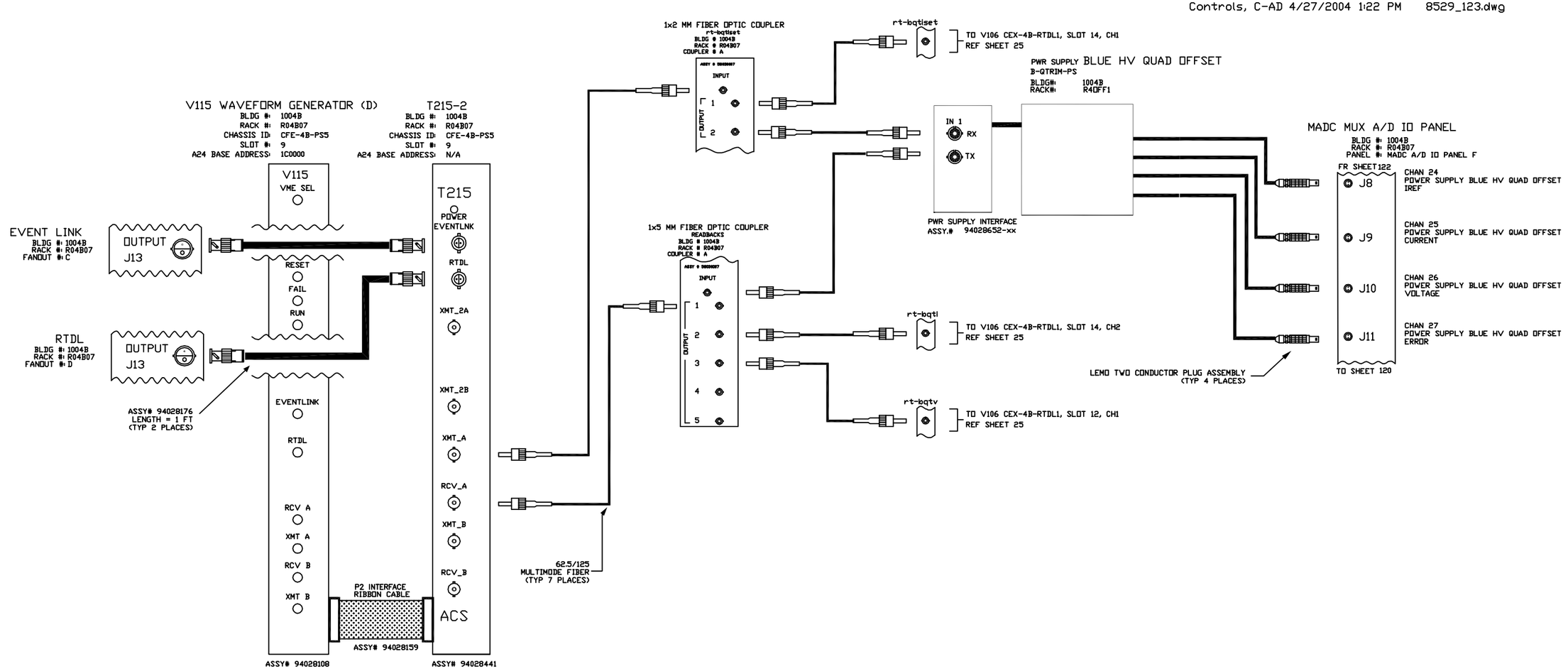

V115 JUMPER LIST
JP3=IN JP4=IN JP1=OUT JP2=OUT
A24 BASE ADDRESS JB1-A23=IN JB1-A22=IN JB1-A21=IN JB1-A20=OUT JB1-A19=OUT JB1-A18=OUT

-3	-2	-1	REF DESIGNATOR	ITEM NO.	DESCRIPTION	MAT'L. DWG NO./BNL NO.
QTY REQD						

INTERPRET IN GENERAL ACCORDANCE WITH ASME Y14.24M-1989

UNLESS OTHERWISE SPECIFIED DIMENSIONS ARE IN INCHES

DECIMAL TOLERANCES
.X ±.030
.XX ±.015
.XXX ±.005
ANGULAR TOLERANCE
± .5°

NA FINISH

BREAK SHARP EDGES
MAX. XX MIN. XX

OUTSTANDING ECN

Q.A. CATEGORY A-3

		DATE
DRAWN BY	Ed Koropsak	10/7/98
CHECKED BY		
DESIGN APPROVAL		
ENGINEER APPROVAL	R.MICHNOFF	10/7/98
SUPVR. APPROVAL		

NEXT ASSEMBLY

BROOKHAVEN NATIONAL LABORATORY
UPTON, N.Y. 11973

RHIC CONTROLS WIRING DIAGRAM
BLDG. 1004B, CFE-4B-PS5
BLUE HV QUAD OFFSET

SIZE D | DRAWING NUMBER 94028529 | REV. A

MATERIAL: ——— SCALE: NA WEIGHT: – SHEET 123

*AUTOCAD

REV.	ZONE	ECN NO.	DATE	BY	CKR	APP.

Controls, C-AD 4/27/2004 1:52 PM 8529_124.dwg

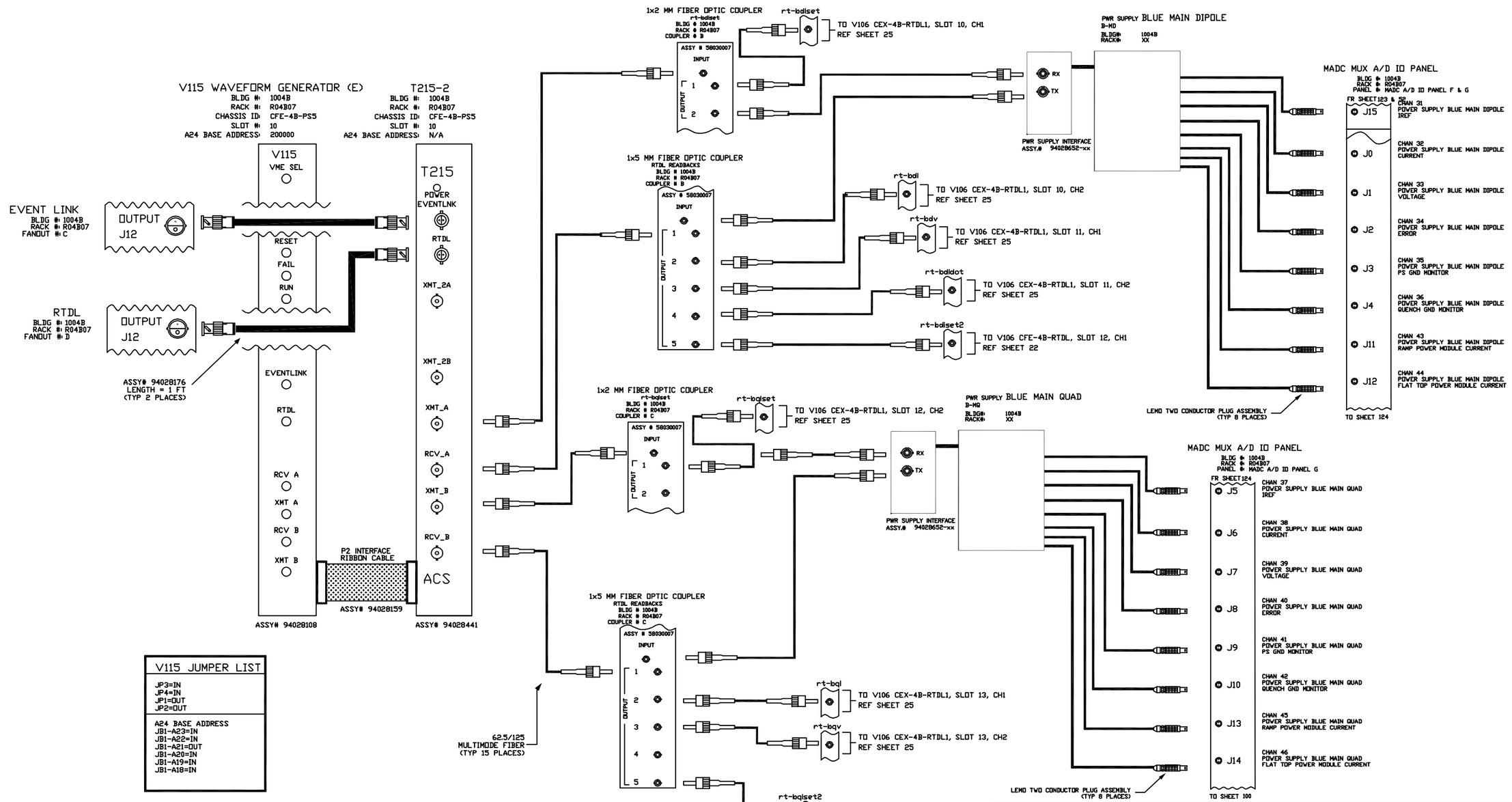

-3	-2	-1	REF DESIGNATOR	ITEM NO.	DESCRIPTION	MAT'L DWG NO./SHL NO.
QTY REQD						

INTERPRET IN GENERAL ACCORDANCE WITH ASME Y14.24M-1989	Q.A. CATEGORY A-3	DATE	BROOKHAVEN NATIONAL LABORATORY UPTON, N.Y. 11973
UNLESS OTHERWISE SPECIFIED DIMENSIONS ARE IN INCHES	DRAWN BY pape	9/13/2002	RHIC CONTROLS WIRING DIAGRAM
DECIMAL TOLERANCES .X ±.030 .XX ±.015 .XXX ±.005 ANGULAR TOLERANCE ± .5°	CHECKED BY		BLDG. 1004B, CFE-4B-PS5
	DESIGN APPROVAL		BLUE MAIN DIPOLE/MAIN QUAD
	ENGINEER APPROVAL R.MICHNOFF	10/7/98	SIZE D — 94028529 — REV. A
	SUPVR. APPROVAL		DRAWING NUMBER
OUTSTANDING ECN	NA FINISH	BREAK SHARP EDGES MAX. XX MIN. XX	NEXT ASSEMBLY

MATERIAL: ——— SCALE: NA WEIGHT: – SHEET 124

1 *AUTOCAD

Controls, C-AD 4/28/2004 2:23 PM 8529_139.dwg

REV.	ZONE	ECN NO.	DATE	BY	CKR	APP.

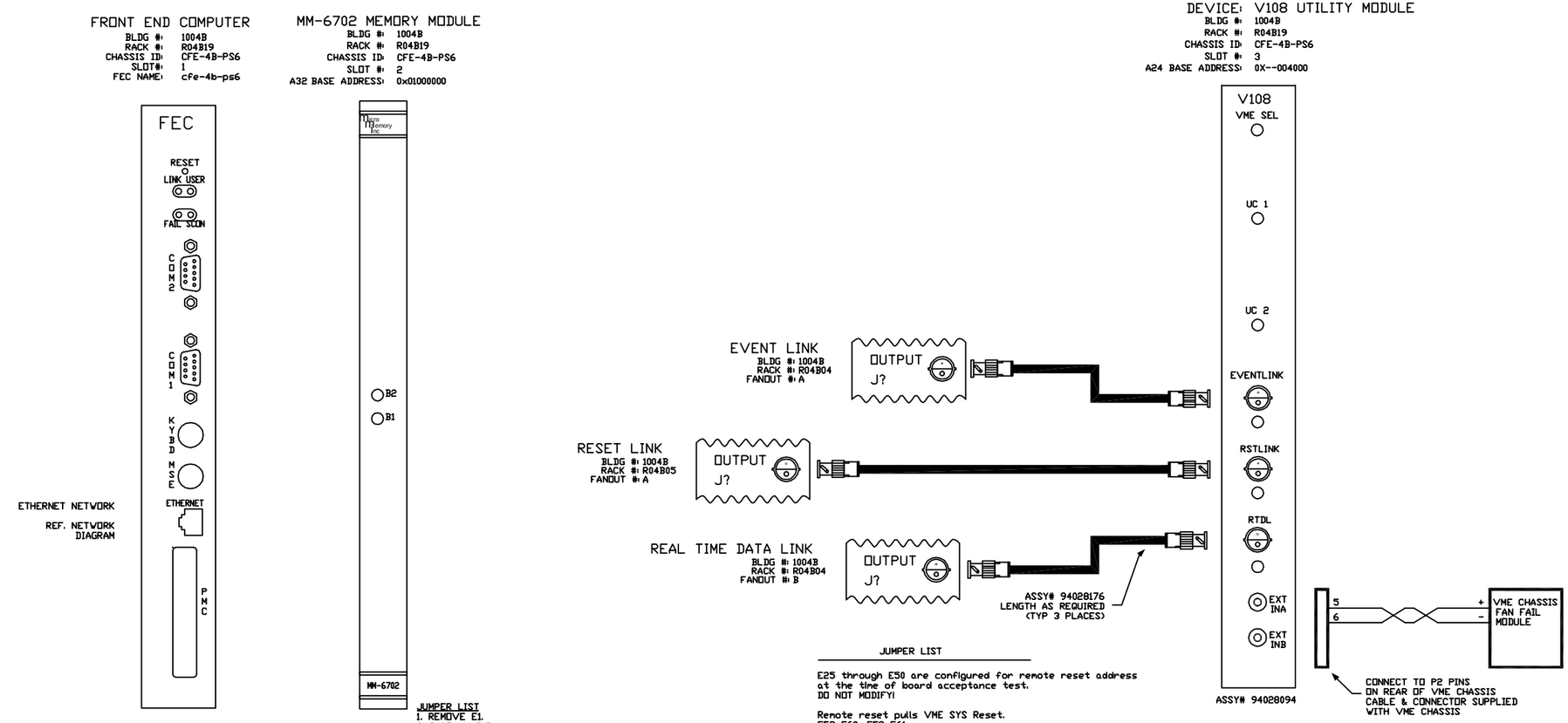

JUMPER LIST
1. REMOVE E1.
2. INSTALL E15.
3. SW2 CLOSE ALL POSITIONS.
4. SW2 CLOSE POSITIONS 7 AND 8.
5. SW1 CLOSE POSITIONS 2-8.
6. INSTALL E14 AND E25 TO ENABLE BATTERIES

JUMPER LIST

E25 through E50 are configured for remote reset address at the time of board acceptance test.
DO NOT MODIFY!

Remote reset pulls VME SYS Reset.
E58-E60, E59-E61

A24 BASE ADDRESS= 4000h
E57-E13, E2-E14, E3-E15, E4-E16, E5-E17, E6-E18
E7-E19, E8-E20, E9-E21, E10-E22, E11-E24, E57-E23
SW1=OPEN
SW2=CLOSED
SW3=OPEN
SW4=OPEN

-3	-2	-1	REF DESIGNATOR	ITEM NO.	DESCRIPTION	MAT'L. DWG NO./INV. NO.
QTY REQD						

INTERPRET IN GENERAL ACCORDANCE WITH ASME Y14.24M-1989

UNLESS OTHERWISE SPECIFIED DIMENSIONS ARE IN INCHES

DECIMAL TOLERANCES
.X ±.030
.XX ±.015
.XXX ±.005
ANGULAR TOLERANCE
± .5°

NA FINISH

BREAK SHARP EDGES
MAX. XX MIN. XX

OUTSTANDING ECN

Q.A. CATEGORY A-3		DATE
DRAWN BY	Ed Koropsak	4/28/04
CHECKED BY		
DESIGN APPROVAL		
ENGINEER APPROVAL	R. MICHNOFF	4/28/04
SUPVR. APPROVAL		

NEXT ASSEMBLY

BROOKHAVEN NATIONAL LABORATORY
UPTON, N.Y. 11973

RHIC CONTROLS WIRING DIAGRAM

1004B, VME CHASSIS CFE-4B-PS6

FT END COMP/V108 UTIL MODULE

SIZE D | DRAWING NUMBER 94028529 | REV. A

MATERIAL: ——— SCALE: NA WEIGHT: – SHEET 139

1 *AUTOCAD

Controls, C-AD 4/28/2004 8:27 AM 8529_140.dwg

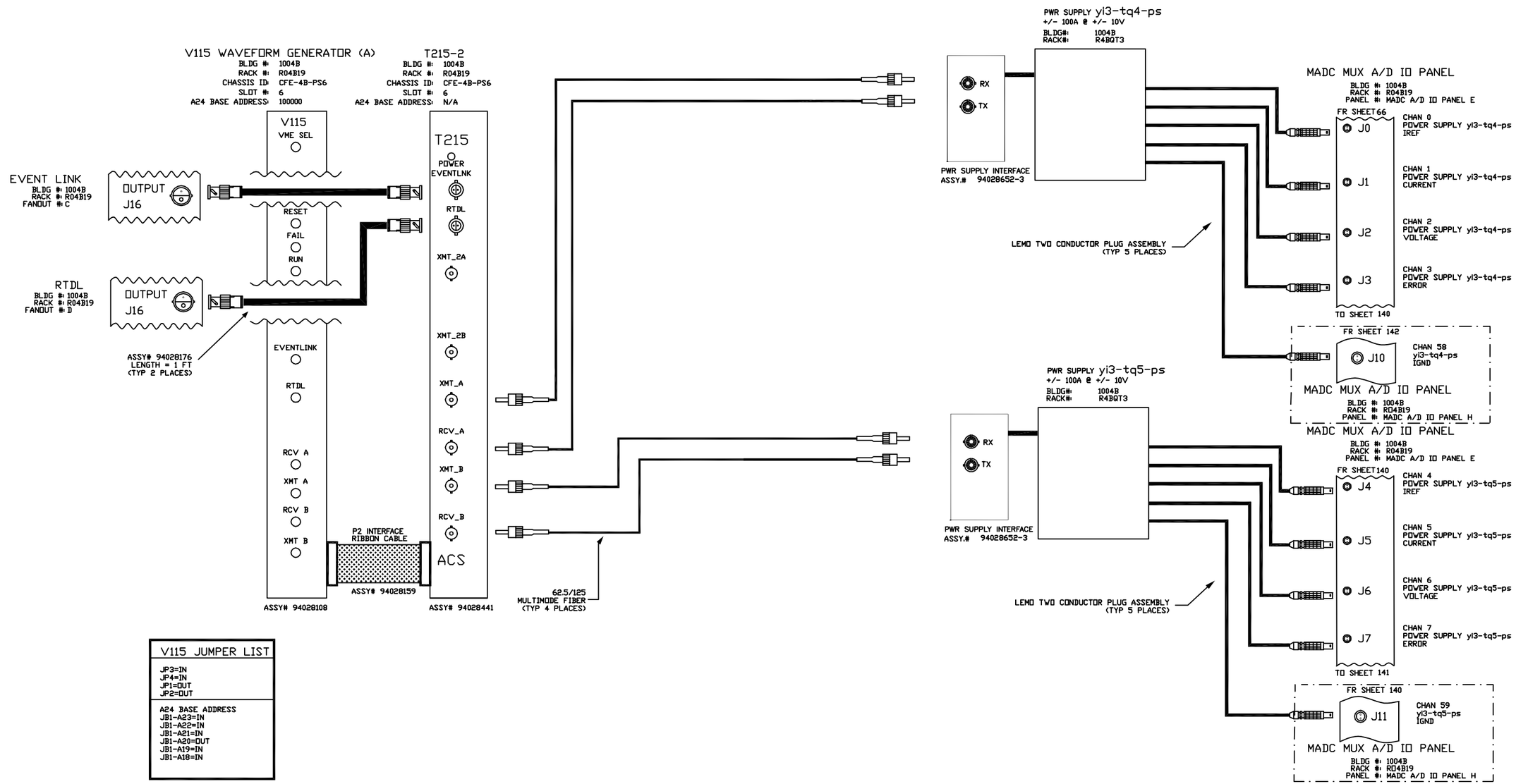

V115 JUMPER LIST
JP3=IN JP4=IN JP1=OUT JP2=OUT
A24 BASE ADDRESS JB1-A23=IN JB1-A22=IN JB1-A21=IN JB1-A20=OUT JB1-A19=IN JB1-A18=IN

REV.	ZONE	ECN NO.	DATE	BY	CKR	APP.

-3	-2	-1	REF DESIGNATOR	ITEM NO.	DESCRIPTION	MAT'L DWG NO./BNL NO.
QTY REQD						

INTERPRET IN GENERAL ACCORDANCE WITH ASME Y14.24M-1989

UNLESS OTHERWISE SPECIFIED DIMENSIONS ARE IN INCHES

DECIMAL TOLERANCES
.X ±.030
.XX ±.015
.XXX ±.005
ANGULAR TOLERANCE
± .5°

NA FINISH

BREAK SHARP EDGES
MAX. XX MIN. XX

OUTSTANDING ECN

Q.A. CATEGORY A-3

		DATE
DRAWN BY	Ed Koropsak	10/8/98
CHECKED BY		
DESIGN APPROVAL		
ENGINEER APPROVAL	R.MICHNOFF	10/8/98
SUPVR. APPROVAL		

NEXT ASSEMBLY

BROOKHAVEN NATIONAL LABORATORY
UPTON, N.Y. 11973

RHIC CONTROLS WIRING DIAGRAM
BLDG. 1004B, CFE-4B-PS6
yi3-tq4-ps/yi3-tq5-ps

SIZE D
DRAWING NUMBER 94028529
REV. A

MATERIAL: ——— SCALE: NA WEIGHT: – SHEET 140

*AUTOCAD

REV.	ZONE	ECN NO.	DATE	BY	CKR	APP.

Controls, C-AD 4/28/2004 9:01 AM 8529_141.dwg

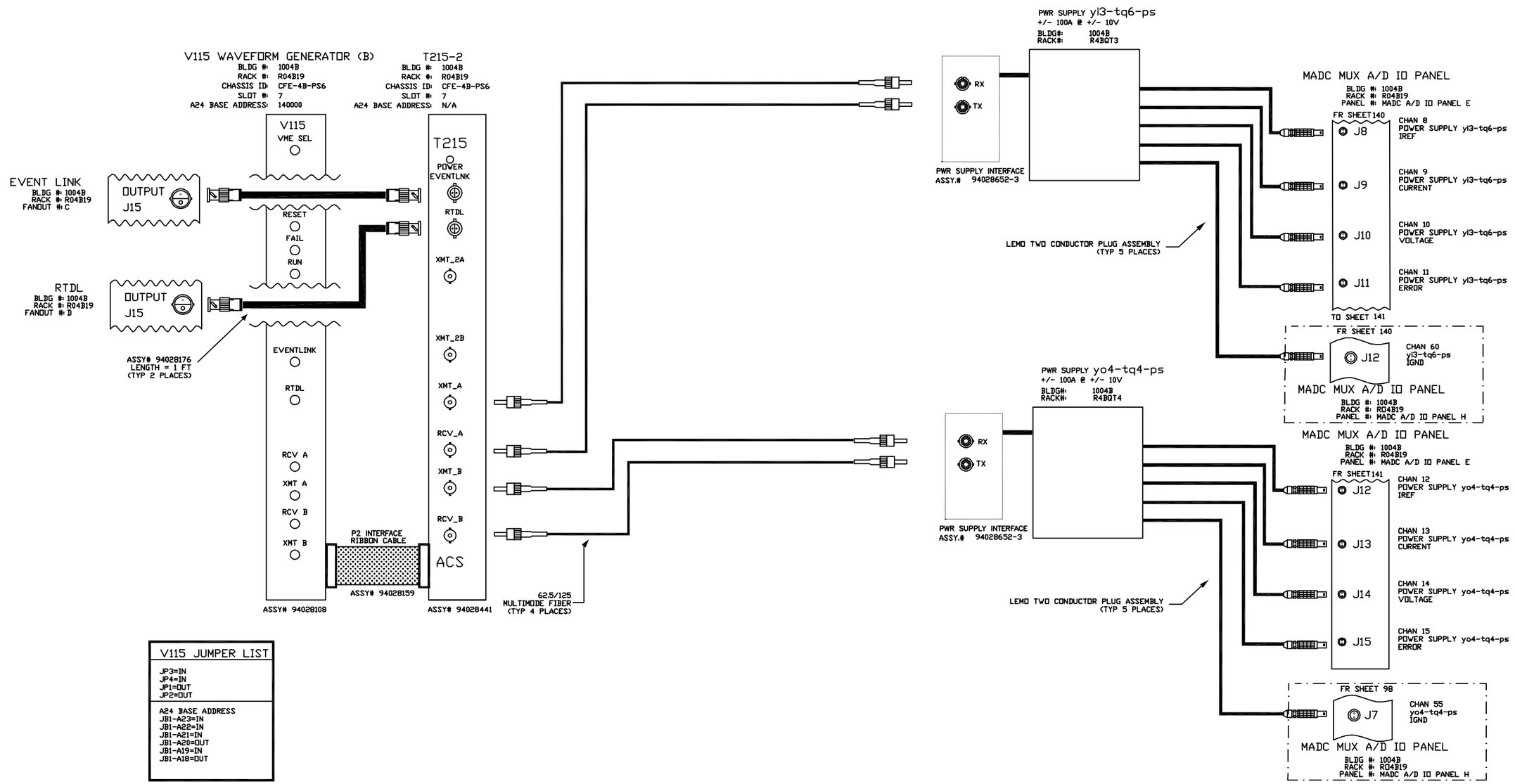

V115 JUMPER LIST
JP3=IN JP4=IN JP1=OUT JP2=OUT
A24 BASE ADDRESS JB1-A23=IN JB1-A22=IN JB1-A21=IN JB1-A20=OUT JB1-A19=IN JB1-A18=OUT

-3	-2	-1	REF DESIGNATOR	ITEM NO.	DESCRIPTION	MAT'L DWG NO.,SPL NO.
QTY REQD						

INTERPRET IN GENERAL ACCORDANCE WITH ASME Y14.24M-1989

UNLESS OTHERWISE SPECIFIED DIMENSIONS ARE IN INCHES

DECIMAL TOLERANCES
.X ±.030
.XX ±.015
.XXX ±.005
ANGULAR TOLERANCE
± .5°

OUTSTANDING ECN: NA

FINISH: √

BREAK SHARP EDGES
MAX. XX MIN. XX

Q.A. CATEGORY A-3

		DATE
DRAWN BY	Ed Koropsak	10/8/98
CHECKED BY		
DESIGN APPROVAL		
ENGINEER APPROVAL	R.MICHNOFF	10/8/98
SUPVR. APPROVAL		

NEXT ASSEMBLY

BROOKHAVEN NATIONAL LABORATORY
UPTON, N.Y. 11973

RHIC CONTROLS WIRING DIAGRAM

BLDG. 1004B, CFE-4B-PS6

yi3-tq6-ps/yo4-tq4-ps

SIZE: D

DRAWING NUMBER: 94028529

REV.: A

MATERIAL: ——— SCALE: NA WEIGHT: – SHEET 141

1 *AUTOCAD

Controls, C-AD 4/28/2004 9:10 AM 8529_142.dwg

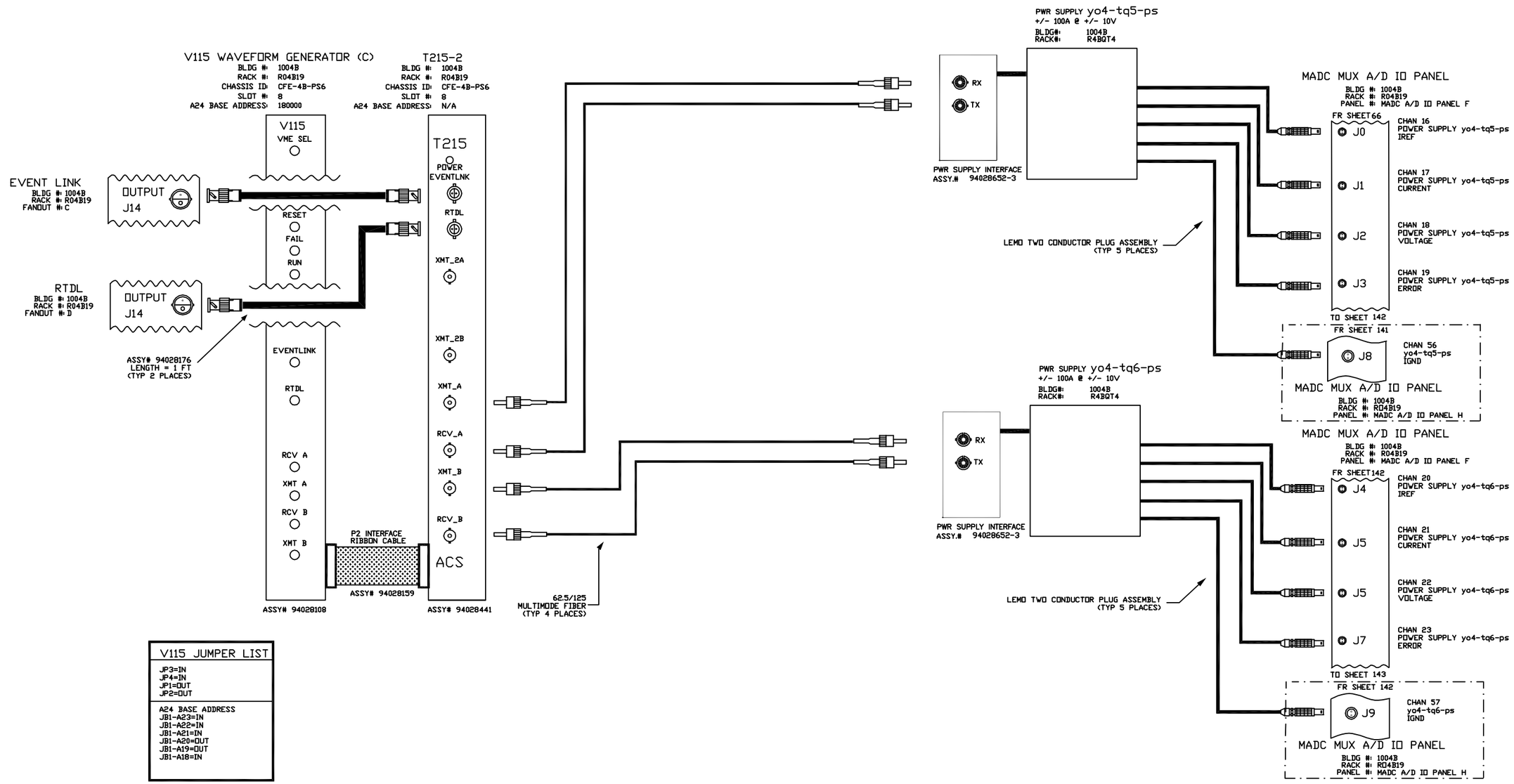

V115 JUMPER LIST
JP3=IN JP4=IN JP1=OUT JP2=OUT
A24 BASE ADDRESS JB1-A23=IN JB1-A22=IN JB1-A21=IN JB1-A20=OUT JB1-A19=OUT JB1-A18=IN

-3	-2	-1	REF DESIGNATOR	ITEM NO.	DESCRIPTION	MAT'L DWG NO./MAT'L NO.
QTY REQD						

INTERPRET IN GENERAL ACCORDANCE WITH ASME Y14.24M-1989

UNLESS OTHERWISE SPECIFIED DIMENSIONS ARE IN INCHES

DECIMAL TOLERANCES
.X ±.030
.XX ±.015
.XXX ±.005
ANGULAR TOLERANCE ± .5°

NA FINISH

BREAK SHARP EDGES MAX. XX MIN. XX

OUTSTANDING ECN

Q.A. CATEGORY A-3		DATE
DRAWN BY	Ed Koropsak	10/8/98
CHECKED BY		
DESIGN APPROVAL		
ENGINEER APPROVAL	R.MICHNOFF	10/8/98
SUPVR. APPROVAL		

NEXT ASSEMBLY

BROOKHAVEN NATIONAL LABORATORY
UPTON, N.Y. 11973

RHIC CONTROLS WIRING DIAGRAM

BLDG. 1004B, CFE-4B-PS6

yo4-tq5-ps/yo4-tq6-ps

SIZE D — DRAWING NUMBER 94028529 — REV. A

MATERIAL: ——— SCALE: NA WEIGHT: – SHEET 142

1 *AUTOCAD

Controls, bnl 5/4/2004 11:37 AM 8529_143.dwg

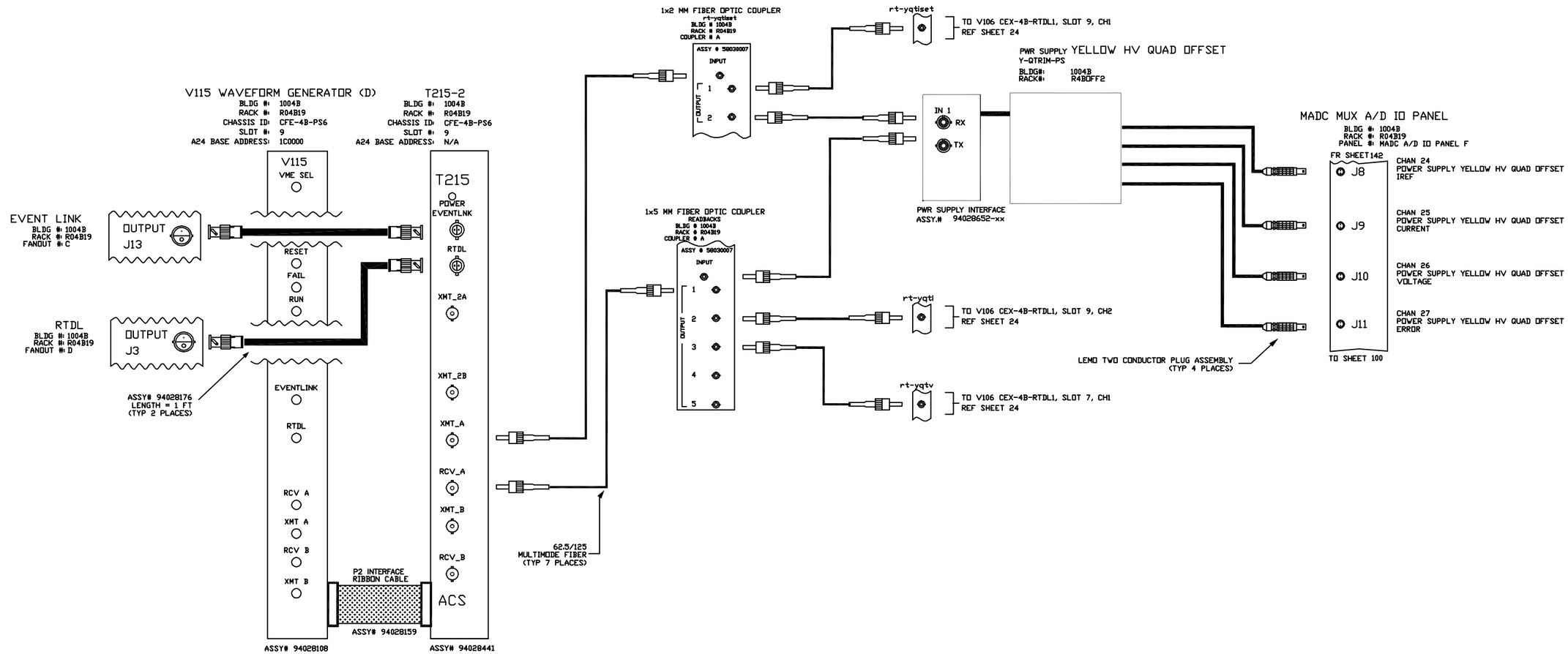

V115 JUMPER LIST
JP3=IN JP4=IN JP1=OUT JP2=OUT
A24 BASE ADDRESS JB1-A23=IN JB1-A22=IN JB1-A21=IN JB1-A20=OUT JB1-A19=OUT JB1-A18=OUT

REV.	ZONE	ECN NO.	DATE	BY	CKR	APP.

-3	-2	-1	REF DESIGNATOR	ITEM NO.	DESCRIPTION	MAT'L DWG NO./ENG. NO.
QTY REQD						

INTERPRET IN GENERAL ACCORDANCE WITH ASME Y14.24M-1989

UNLESS OTHERWISE SPECIFIED DIMENSIONS ARE IN INCHES

DECIMAL TOLERANCES
.X ±.030
.XX ±.015
.XXX ±.005
ANGULAR TOLERANCE
± .5°

OUTSTANDING ECN: NA

FINISH: NA

BREAK SHARP EDGES MAX. XX MIN. XX

Q.A. CATEGORY A-3		DATE
DRAWN BY	Ed Koropsak	10/8/98
CHECKED BY		
DESIGN APPROVAL		
ENGINEER APPROVAL	R.MICHNOFF	10/8/98
SUPVR. APPROVAL		

NEXT ASSEMBLY

BROOKHAVEN NATIONAL LABORATORY
UPTON, N.Y. 11973

RHIC CONTROLS WIRING DIAGRAM

BLDG. 1004B, CFE-4B-PS6

YELLOW HV QUAD OFFSET

SIZE D | DRAWING NUMBER 94028529 | REV. A

MATERIAL: ——— SCALE: NA WEIGHT: – SHEET 143

*AUTOCAD

Controls, C-AD 4/28/2004 11:05 AM 8529_144.dwg

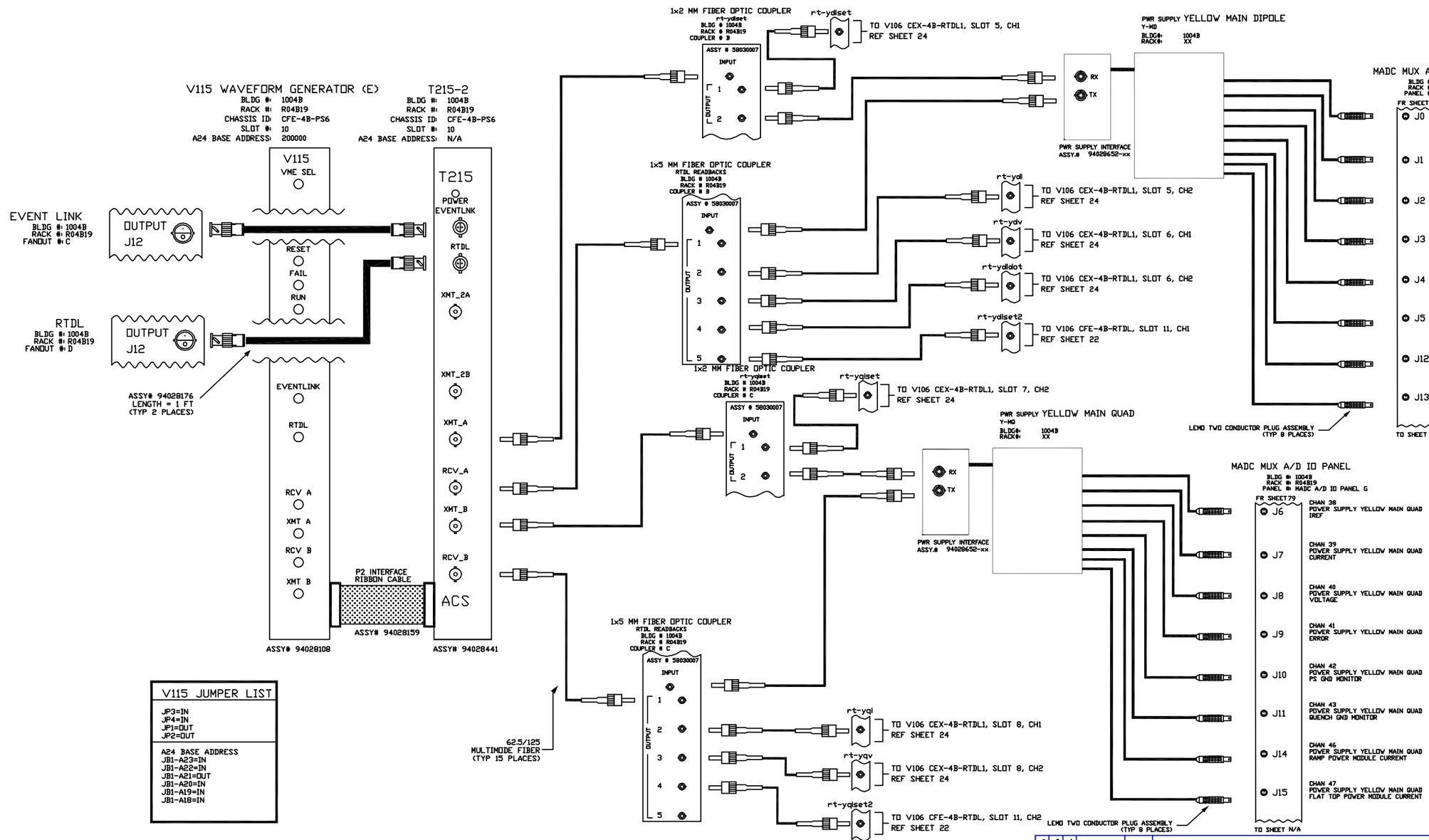

V115 JUMPER LIST
JP3=IN JP4=IN JP1=OUT JP2=OUT
A24 BASE ADDRESS JB1-A23=IN JB1-A22=IN JB1-A21=OUT JB1-A20=IN JB1-A19=IN JB1-A18=IN

REV.	ZONE	ECN NO.	DATE	BY	CKR	APP.

-3	-2	-1	REF DESIGNATOR	ITEM NO.	DESCRIPTION	MAT'L DWG NO./MAL NO.
QTY REQD						

INTERPRET IN GENERAL ACCORDANCE WITH ASME Y14.24M-1989

UNLESS OTHERWISE SPECIFIED DIMENSIONS ARE IN INCHES

DECIMAL TOLERANCES
.X ±.030
.XX ±.015
.XXX ±.005
ANGULAR TOLERANCE
± .5°

FINISH: NA

BREAK SHARP EDGES MAX. XX MIN. XX

OUTSTANDING ECN

Q.A. CATEGORY A-3

		DATE
DRAWN BY	PAPE	09/13/2002
CHECKED BY		
DESIGN APPROVAL		
ENGINEER APPROVAL	R.MICHNOFF	10/8/98
SUPVR. APPROVAL		

NEXT ASSEMBLY

BROOKHAVEN NATIONAL LABORATORY
UPTON, N.Y. 11973

RHIC CONTROLS WIRING DIAGRAM
BLDG. 1004B, CFE-4B-PS6
YELLOW MAIN DIPOLE/MAIN QUAD

SIZE D — DRAWING NUMBER 94028529 — REV. A

MATERIAL: ——— SCALE: NA WEIGHT: – SHEET 144

*AUTOCAD