# RHIC Accelerator Controls Section
# Alcove 1003A Wiring Diagrams
# BNL Drawing Number 94028336

Brookhaven National Laboratory, Upton, New York 11973

Created By: Phil Pape
Last Updated 6/13/03

**Power Distribution**

🕮 Rack R03A08 (Sheet 1)
🕮 Rack R03A09, Rack R03A10 (Sheet 2)

**Spares**

🕮 Spare Fiber Optic Receiver/Transmitter Channels (Sheet 3)
🕮 4122 Analog Outputs (Sheet 3)
🕮 Spare MADC Channels (Sheet 54)

**Serial Links**

🕮 Event Link (Sheet 4,5)
🕮 Real Time Data Link (RTDL) (Sheet 6,7)
🕮 Reset Link (Sheet 8)
🕮 Beam Sync Yellow Link (Sheet 9)
🕮 Beam Sync Blue Link (Sheet 10)

**VME Chassis CFE-3A-PS1 modules**

🕮 Front End Computer, Memory board and V108 Utility Module (Sheet 11)
🕮 V113/V114 MADC System (Sheet 12)
🕮 V115 WFG A: bo2-th4, bo2-tv5 (Sheet 13)
🕮 V115 WFG B: bo2-th6, bo2-tv7 (Sheet 14)
🕮 V115 WFG C: bo2-th8, bo2-tv9 (Sheet 15)
🕮 V115 WFG D: bo2-th10, bo2-tv11 (Sheet 16)
🕮 V115 WFG E: bo2-th12, bo2-tv13 (Sheet 17)
🕮 V115 WFG F: bo2-th14, bo2-qs-ps (Sheet 18)
🕮 V115 WFG G: bo2-octf-ps, bo2-octd-ps (Sheet 19)
🕮 V115 WFG H: bo2-qgt-ps, bo2-th2 (Sheet 20)
🕮 V115 WFG I: bo2-qs3, bo2-tv3 (Sheet 21)
🕮 V120 Permit Module (Sheet 51)
🕮 Permit System Interface Panel (Sheet 52)
🕮 4122 Gamma Transition Ref. Voltage (Sheet 53)

**VME Chassis CFE-3A-PS2 modules**

🕮 Front End Computer, Memory board V108 Utility Module (Sheet 28)
🕮 V113/V114 MADC System (Sheet 29)
🕮 V115 WFG A: yi2-tv4, yi2-th5 (Sheet 30)
🕮 V115 WFG B: yi2-tv6, yi2-th7 (Sheet 31)
🕮 V115 WFG C: yi2-tv8, yi2-th9 (Sheet 32)
🕮 V115 WFG D: yi2-tv10, yi2-th11 (Sheet 33)
🕮 V115 WFG E: yi2-tv12, yi2-th13 (Sheet 34)
🕮 V115 WFG F: yi2-tv14, yi2-qs-ps (Sheet 35)
🕮 V115 WFG G: yi2-octf-ps, yi2-octd-ps (Sheet 36)
🕮 V115 WFG H: yi2-qgt-ps, yi2-tv2 (Sheet 37)
🕮 V115 WFG I: yi2-qs3, yi2-th3 (Sheet 38)
🕮 (Sheet 47)
🕮 V102 Delay Module A - Event Link (Sheet 48)

**NOTE: Sheets 22-27 are Blank**
**Sheets 39-46 are Blank**

| REV. | ZONE | ECN NO. | DATE | BY | CKR | APP. |
|---|---|---|---|---|---|---|

CONTROLS- 7/11/01 9:35 AM 8336_01.dwg

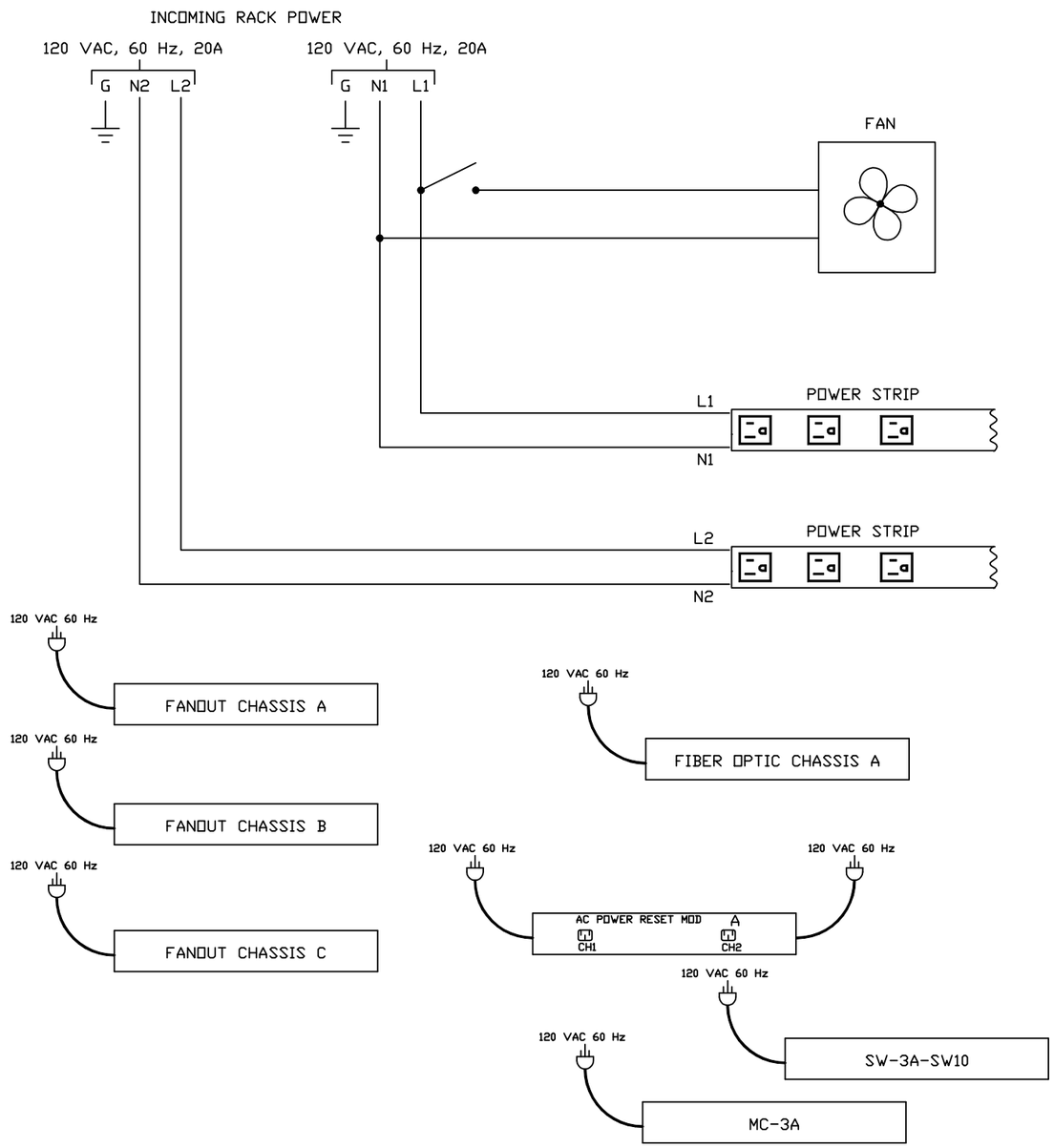


NOTE: ALL 120 VAC, 60 Hz POWER CORDS
PLUG INTO POWER STRIP OUTLETS

RACK R03A08

| -3 | -2 | -1 | REF DESIGNATOR | ITEM NO. | DESCRIPTION | MAT'L DWG NO./BNL NO. |
|---|---|---|---|---|---|---|
| | | 102 | | 11 | CABLE ASSY, POWER SUPPLY TO MADC A/D I/O PANEL (3 CABLES/PS) | |
| | | 34 | | 10 | CABLE ASSY, LOW RES PS IF MODULE TO POWER SUPPLY | |
| | | 1 | | 9 | PERMIT SYSTEM INTERFACE CABLE, T120 TO PERMIT SYSTEM INTERFACE PANEL | D09-E2225-2 |
| | | 33 | | 8 | SERIAL LINK TWINAX CABLE, LENGTH AS REQUIRED | 94028176 |
| | | 36 | | 7 | SERIAL LINK TWINAX CABLE, 1 FT | 94028176 |
| | | 34 | | 6 | DUPLEX MULTIMODE FIBER OPTIC CABLE, T115 TO LOW RES PS INTERFACE MODULE | 94028249 |
| | | 13 | | 5 | SINGLE MODE FIBER OPTIC CABLE | 94028251 |
| | | 8 | | 4 | MADC A/D I/O CABLE | 94028216 |
| | | 19 | | 3 | TRANSITION MODULE P2 RIBBON CABLE, V115, V120 | 94028159 |
| | | 2 | | 2 | MADC V113 TO V114 P2 INTERFACE RIBBON CABLE | 94028218 |
| | | 3 | | 1 | NETWORK CABLE TO FRONT END COMPUTER | |

QTY REQD

INTERPRET IN GENERAL ACCORDANCE WITH ASME Y14.24M-1989

UNLESS OTHERWISE SPECIFIED DIMENSIONS ARE IN INCHES

DECIMAL TOLERANCES
.X ±.030
.XX ±.015
.XXX ±.005
ANGULAR TOLERANCE
± .5°

NA FINISH

BREAK SHARP EDGES
MAX. XX MIN. XX

OUTSTANDING ECN

| | | |
|---|---|---|
| Q.A. CATEGORY A-3 | | DATE |
| DRAWN BY | Phil Pape | 10/20/97 |
| CHECKED BY | | |
| DESIGN APPROVAL | | |
| ENGINEER APPROVAL | R. MICHNOFF | 10/20/97 |
| SUPVR. APPROVAL | | |

NEXT ASSEMBLY

BROOKHAVEN NATIONAL LABORATORY
UPTON, N.Y. 11973

RHIC CONTROLS WIRING DIAGRAM
ALCOVE 1003A, RACK R03A08
POWER DISTRIBUTION

SIZE D | DRAWING NUMBER 94028336 | REV. A

MATERIAL: ——— SCALE: NA WEIGHT: – SHEET 1 OF 52

*AUTOCAD

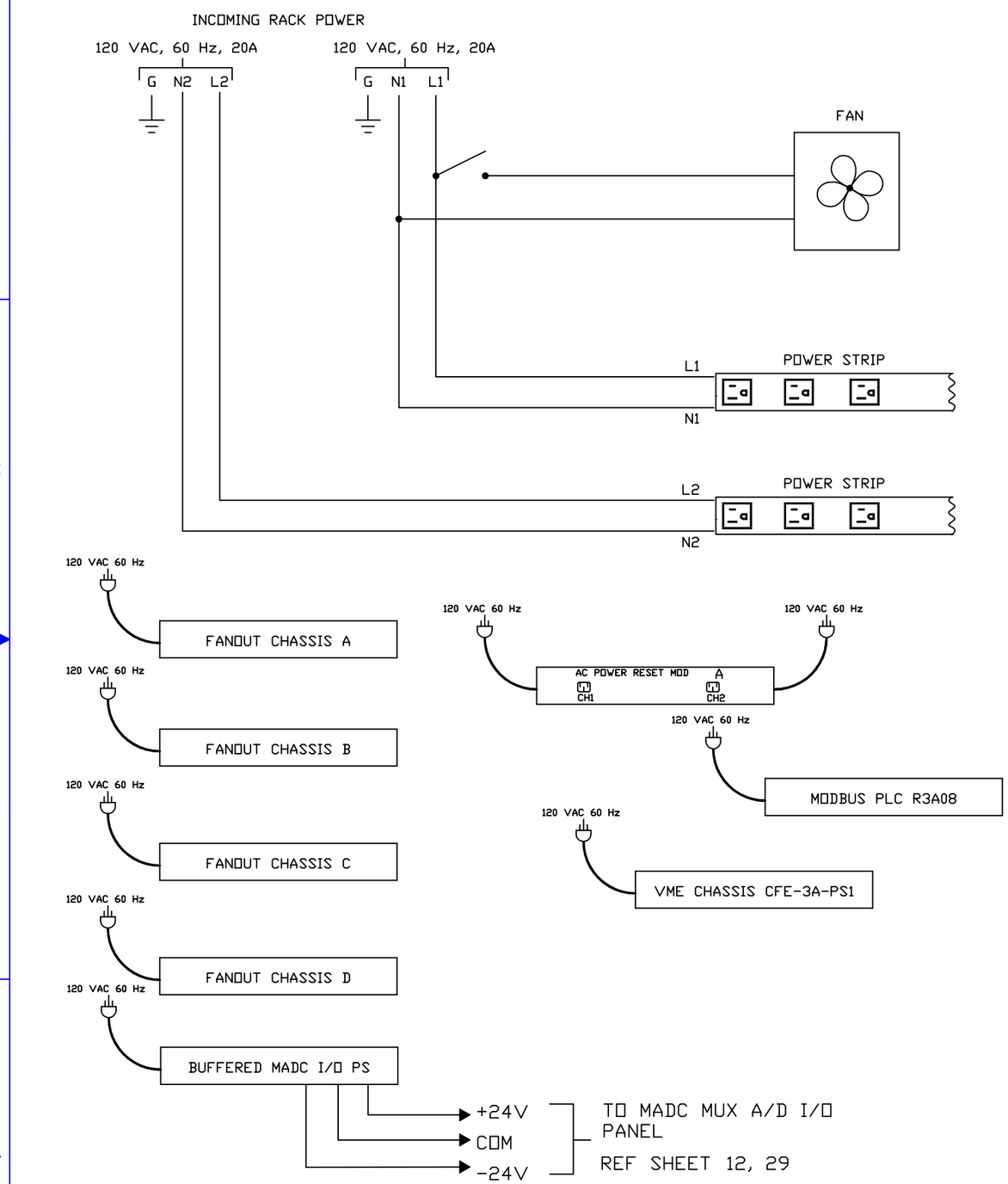


RACK R03A09

NOTE: ALL 120 VAC, 60 Hz POWER CORDS
PLUG INTO POWER STRIP OUTLETS EXCEPT FOR VME 6U CHASSIS

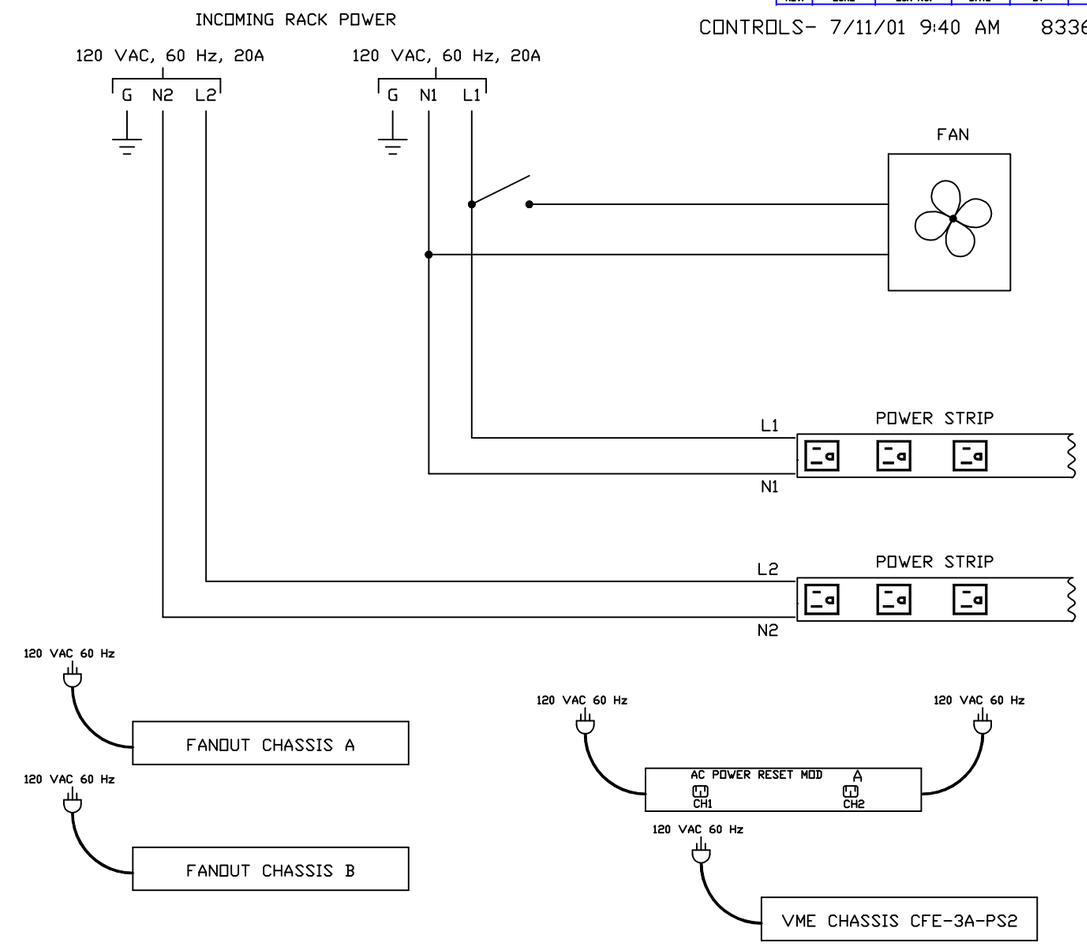


NOTE: ALL 120 VAC, 60 Hz POWER CORDS
PLUG INTO POWER STRIP OUTLETS EXCEPT FOR VME 6U CHASSIS

RACK R03A10

| REV. | ZONE | ECN NO. | DATE | BY | CKR | APP. |
|---|---|---|---|---|---|---|

CONTROLS- 7/11/01 9:40 AM 8336_02.dwg

| -3 | -2 | -1 | REF DESIGNATOR | ITEM NO. | DESCRIPTION | MAT'L DWG NO./INL NO. |
|---|---|---|---|---|---|---|
| QTY REQD | | | | | | |

INTERPRET IN GENERAL ACCORDANCE WITH ASME Y14.24M-1989
UNLESS OTHERWISE SPECIFIED DIMENSIONS ARE IN INCHES
DECIMAL TOLERANCES .X ±.030 .XX ±.015 .XXX ±.005
ANGULAR TOLERANCE ± .5°
NA FINISH
BREAK SHARP EDGES MAX. XX MIN. XX
OUTSTANDING ECN

Q.A. CATEGORY A-3

| | | DATE |
|---|---|---|
| DRAWN BY | Venegas | 8/28/99 |
| CHECKED BY | | |
| DESIGN APPROVAL | | |
| ENGINEER APPROVAL | R. MICHNOFF | 10/20/97 |
| SUPVR. APPROVAL | | |

NEXT ASSEMBLY

BROOKHAVEN NATIONAL LABORATORY
UPTON, N.Y. 11973
RHIC CONTROLS WIRING DIAGRAM
ALCOVE 1003A, RACK R03A09, R03A10
POWER DISTRIBUTION

SIZE D | DRAWING NUMBER 94028336 | REV. A
MATERIAL: ——— SCALE: NA WEIGHT: – SHEET 2 OF 52

1 *AUTOCAD

ACS, BNL 12/3/99 1:50 PM 8336_03.dwg

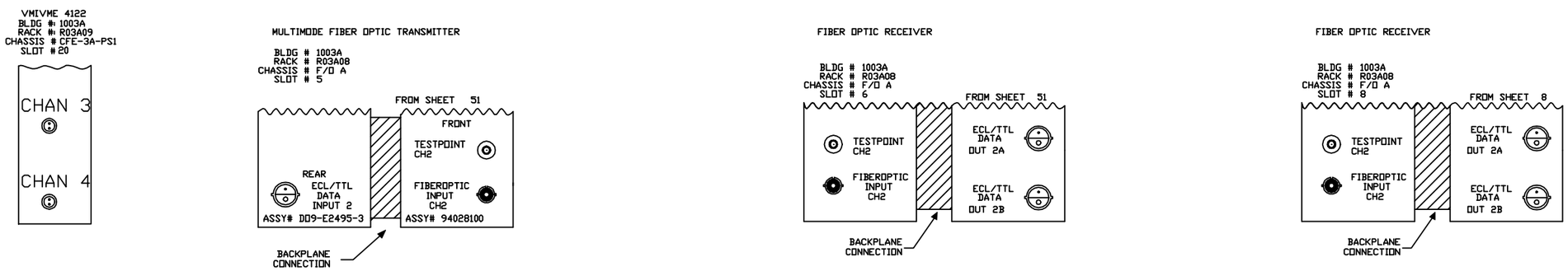


| REV. | ZONE | ECN NO. | DATE | BY | CKR | APP. |
|---|---|---|---|---|---|---|

| -3 | -2 | -1 | REF DESIGNATOR | ITEM NO. | DESCRIPTION | MAT'L DWG NO./BNL NO. |
|---|---|---|---|---|---|---|
| QTY REQD | | | | | | |

INTERPRET IN GENERAL ACCORDANCE WITH ASME Y14.24M-1989

UNLESS OTHERWISE SPECIFIED DIMENSIONS ARE IN INCHES

DECIMAL TOLERANCES
.X ±.030
.XX ±.015
.XXX ±.005
ANGULAR TOLERANCE ± .5°

NA FINISH

BREAK SHARP EDGES MAX. XX MIN. XX

OUTSTANDING ECN

| | | |
|---|---|---|
| Q.A. CATEGORY A-3 | | DATE |
| DRAWN BY | Phil Pape | 10/20/97 |
| CHECKED BY | | |
| DESIGN APPROVAL | | |
| ENGINEER APPROVAL | R. MICHNOFF | 10/20/97 |
| SUPVR. APPROVAL | | |

NEXT ASSEMBLY

**BROOKHAVEN NATIONAL LABORATORY**
**UPTON, N.Y. 11973**

RHIC CONTROLS WIRING DIAGRAM

ALCOVE 1003A

SPARE F/O RCVR/XMIT CHANNELS

SIZE D | DRAWING NUMBER 94028336 | REV. A

MATERIAL: ——— SCALE: NA WEIGHT: – SHEET 3 OF 53

*AUTOCAD

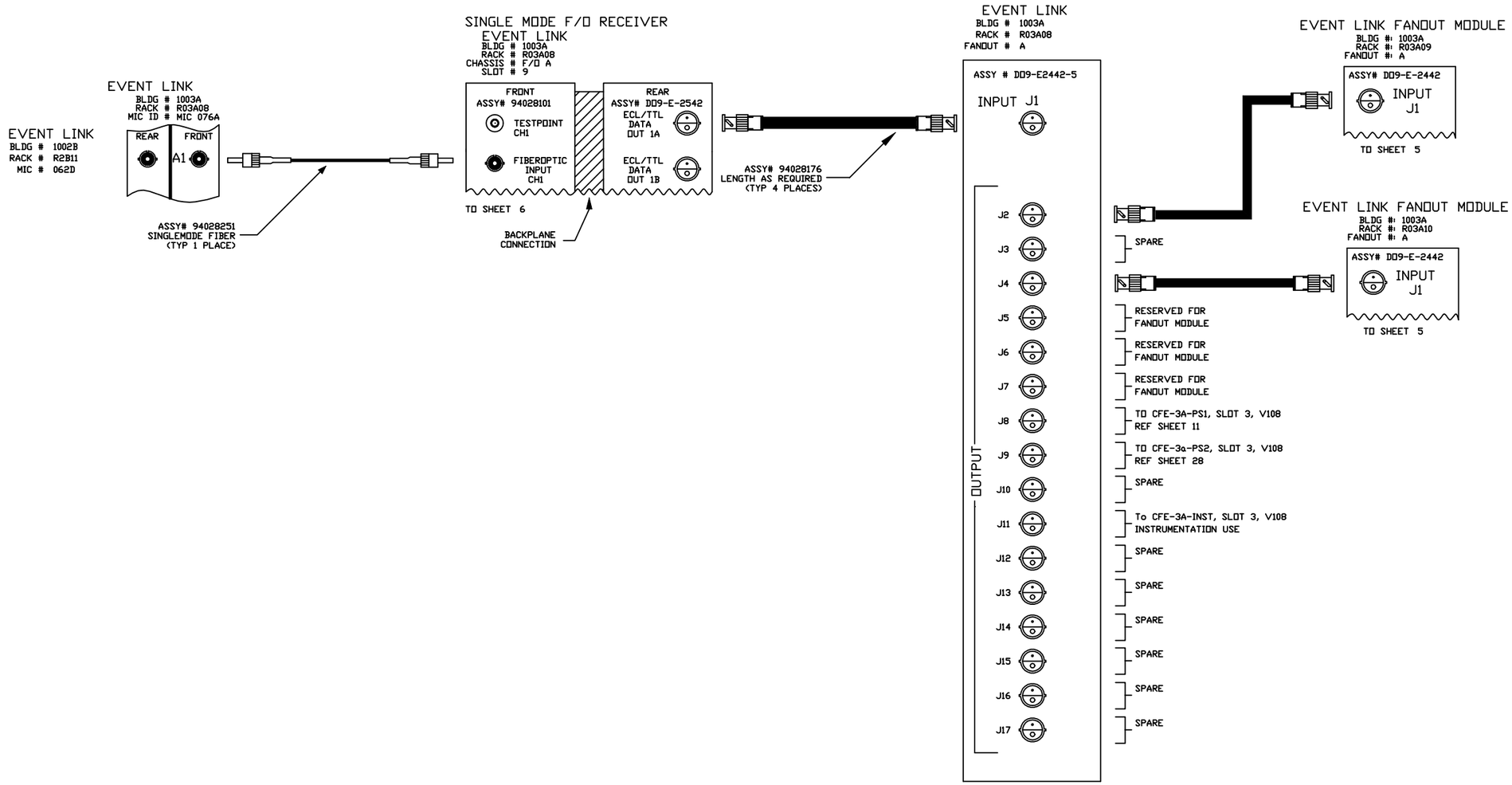


| -3 | -2 | -1 | REF DESIGNATOR | ITEM NO. | DESCRIPTION | MAT'L. DWG NO./INL NO. |
|---|---|---|---|---|---|---|
| QTY REQD | | | | | | |

INTERPRET IN GENERAL ACCORDANCE WITH ASME Y14.24M-1989

UNLESS OTHERWISE SPECIFIED DIMENSIONS ARE IN INCHES

DECIMAL TOLERANCES
X ±.030
.XX ±.015
.XXX ±.005
ANGULAR TOLERANCE
± .5°

NA FINISH

BREAK SHARP EDGES
MAX. XX MIN. XX

OUTSTANDING ECN

| | | |
|---|---|---|
| Q.A. CATEGORY A-3 | | DATE |
| DRAWN BY | Phil Pape | 10/20/97 |
| CHECKED BY | | |
| DESIGN APPROVAL | | |
| ENGINEER APPROVAL | R. MICHNOFF | 10/20/97 |
| SUPVR. APPROVAL | | |
| NEXT ASSEMBLY | | |

**BROOKHAVEN NATIONAL LABORATORY**
ASSOCIATED UNIVERSITIES, INC.
UPTON, N.Y. 11973

RHIC CONTROLS WIRING DIAGRAM

ALCOVE 1003A

EVENT LINK

SIZE D | DRAWING NUMBER 94028336 | REV. A

MATERIAL: ——— | SCALE: NA | WEIGHT: – | SHEET 4 OF 52

*AUTOCAD

| REV. | ZONE | ECN NO. | DATE | BY | CKR | APP. |
|---|---|---|---|---|---|---|

## EVENT LINK FANOUT MODULE

BLDG # 1003A
RACK # R03A09
FANOUT # A

FROM SHEET 4
ASSY # DD9-E2442-5

OUTPUT

| | |
|---|---|
| J2 | To CFE-3A-PS11, SLOT 21, T120 REF SHEET 51 |
| J3 | To CFE-3A-PS1, SLOT 4, V113 REF SHEET 12 |
| J4 | SPARE |
| J5 | SPARE |
| J6 | SPARE |
| J7 | SPARE |
| J8 | SPARE |
| J9 | To CFE-3A-PS1, SLOT 14, T115 REF SHEET 21 |
| J10 | To CFE-3A-PS1, SLOT 13, T115 REF SHEET 20 |
| J11 | To CFE-3A-PS1, SLOT 12, T115 REF SHEET 19 |
| J12 | To CFE-3A-PS1, SLOT 11, T115 REF SHEET 18 |
| J13 | To CFE-3A-PS1, SLOT 10, T115 REF SHEET 17 |
| J14 | To CFE-3A-PS1, SLOT 9, T115 REF SHEET 16 |
| J15 | To CFE-3A-PS1, SLOT 8, T115 REF SHEET 15 |
| J16 | To CFE-3A-PS1, SLOT 7, T115 REF SHEET 14 |
| J17 | To CFE-3A-PS1, SLOT 6, T115 REF SHEET 13 |

## EVENT LINK FANOUT MODULE

BLDG # 1003A
RACK # R03A10
FANOUT # A

FROM SHEET 4
ASSY # DD9-E2442-5

OUTPUT

| | |
|---|---|
| J2 | To CFE-3A-PS2, SLOT 20, V102 REF SHEET 29 |
| J3 | To CFE-3A-PS2, SLOT 4, V113 REF SHEET 29 |
| J4 | To CFE-3A-PS2, SLOT 19, T115 REF SHEET 43 |
| J5 | To CFE-3A-PS2, SLOT 18, T115 REF SHEET 42 |
| J6 | To CFE-3A-PS2, SLOT 17, T115 REF SHEET 41 |
| J7 | To CFE-3A-PS2, SLOT 16, T115 REF SHEET 40 |
| J8 | To CFE-3A-PS2, SLOT 15, T115 REF SHEET 39 |
| J9 | To CFE-3A-PS2, SLOT 14, T115 REF SHEET 38 |
| J10 | To CFE-3A-PS2, SLOT 13, T115 REF SHEET 37 |
| J11 | To CFE-3A-PS2, SLOT 12, T115 REF SHEET 36 |
| J12 | To CFE-3A-PS2, SLOT 11, T115 REF SHEET 35 |
| J13 | To CFE-3A-PS2, SLOT 10, T115 REF SHEET 34 |
| J14 | To CFE-3A-PS2, SLOT 9, T115 REF SHEET 33 |
| J15 | To CFE-3A-PS2, SLOT 8, T115 REF SHEET 32 |
| J16 | To CFE-3A-PS2, SLOT 7, T115 REF SHEET 31 |
| J17 | To CFE-3A-PS2, SLOT 6, T115 REF SHEET 30 |

| -3 | -2 | -1 | REF DESIGNATOR | ITEM NO. | DESCRIPTION | MAT'L DWG NO.,SPEC. NO. |
|---|---|---|---|---|---|---|
| QTY REQD | | | | | | |

INTERPRET IN GENERAL ACCORDANCE WITH ASME Y14.24M-1989

UNLESS OTHERWISE SPECIFIED DIMENSIONS ARE IN INCHES

DECIMAL TOLERANCES
.X ±.030
.XX ±.015
.XXX ±.005
ANGULAR TOLERANCE ± .5°

OUTSTANDING ECN: NA

FINISH: NA

BREAK SHARP EDGES MAX. XX MIN. XX

| | | |
|---|---|---|
| Q.A. CATEGORY A-3 | | DATE |
| DRAWN BY | Phil Pape | 10/20/97 |
| CHECKED BY | | |
| DESIGN APPROVAL | | |
| ENGINEER APPROVAL | R. MICHNOFF | 10/20/97 |
| SUPVR. APPROVAL | | |

NEXT ASSEMBLY

BROOKHAVEN NATIONAL LABORATORY
ASSOCIATED UNIVERSITIES, INC.
UPTON, N.Y. 11973

RHIC CONTROLS WIRING DIAGRAM
ALCOVE 1003A
EVENT LINK

SIZE D | DRAWING NUMBER 94028336 | REV. A

MATERIAL: ——— SCALE: NA WEIGHT: — SHEET 5 of 52

*AUTOCAD

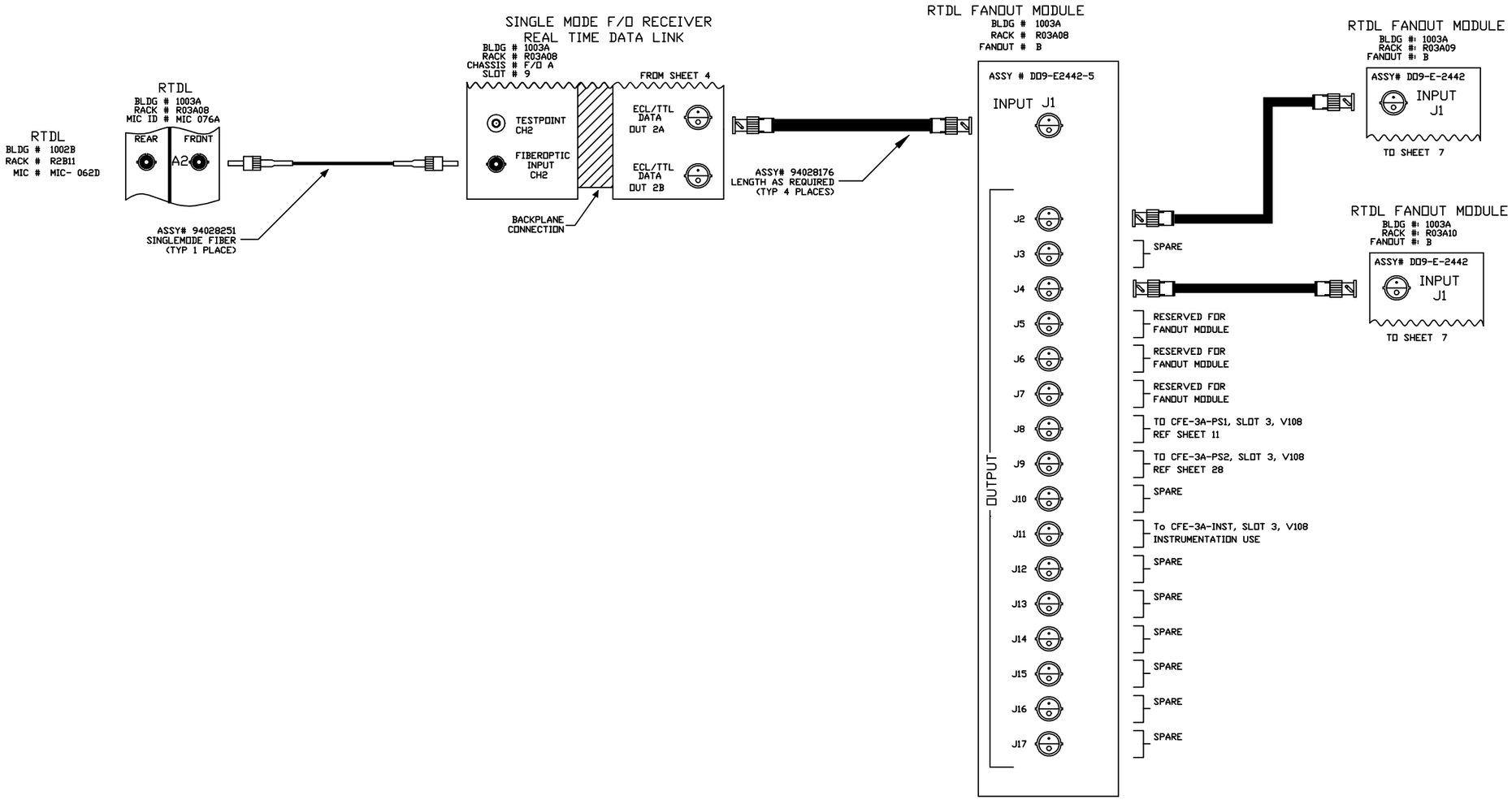


| REV. | ZONE | ECN NO. | DATE | BY | CKR | APP. |
|---|---|---|---|---|---|---|

| -3 | -2 | -1 | REF DESIGNATOR | ITEM NO. | DESCRIPTION | MAT'L. DWG NO./BNL NO. |
|---|---|---|---|---|---|---|
| QTY REQD | | | | | | |

INTERPRET IN GENERAL ACCORDANCE WITH ASME Y14.24M-1989

UNLESS OTHERWISE SPECIFIED DIMENSIONS ARE IN INCHES

DECIMAL TOLERANCES
.X ±.030
.XX ±.015
.XXX ±.005
ANGULAR TOLERANCE
± .5°

NA FINISH

BREAK SHARP EDGES
MAX. XX MIN. XX

OUTSTANDING ECN

| | | |
|---|---|---|
| Q.A. CATEGORY A-3 | | DATE |
| DRAWN BY | Phil Pape | 10/20/97 |
| CHECKED BY | | |
| DESIGN APPROVAL | | |
| ENGINEER APPROVAL | R. MICHNOFF | 10/20/97 |
| SUPVR. APPROVAL | | |

NEXT ASSEMBLY

**BROOKHAVEN NATIONAL LABORATORY**
ASSOCIATED UNIVERSITIES, INC.
UPTON, N.Y. 11973

RHIC CONTROLS WIRING DIAGRAM

ALCOVE 1003A

REAL TIME DATA LINK

SIZE D | DRAWING NUMBER 94028336 | REV. A

MATERIAL: ——— | SCALE: NA | WEIGHT: – | SHEET 6 OF 52

*AUTOCAD

| REV. | ZONE | ECN NO. | DATE | BY | CKR | APP. |
|---|---|---|---|---|---|---|

RTDL FANOUT MODULE
BLDG # 1003A
RACK # R03A09
FANOUT # B

FROM SHEET 6
ASSY # DD9-E2442-5

OUTPUT

| | |
|---|---|
| J2 | SPARE |
| J3 | SPARE |
| J4 | SPARE |
| J5 | SPARE |
| J6 | SPARE |
| J7 | SPARE |
| J8 | SPARE |
| J9 | To CFE-3A-PS1, SLOT 14, T115 REF SHEET 21 |
| J10 | To CFE-3A-PS1, SLOT 13, T115 REF SHEET 20 |
| J11 | To CFE-3A-PS1, SLOT 12, T115 REF SHEET 19 |
| J12 | To CFE-3A-PS1, SLOT 11, T115 REF SHEET 18 |
| J13 | To CFE-3A-PS1, SLOT 10, T115 REF SHEET 17 |
| J14 | To CFE-3A-PS1, SLOT 9, T115 REF SHEET 16 |
| J15 | To CFE-3A-PS1, SLOT 8, T115 REF SHEET 15 |
| J16 | To CFE-3A-PS1, SLOT 7, T115 REF SHEET 14 |
| J17 | To CFE-3A-PS1, SLOT 6, T115 REF SHEET 13 |

RTDL FANOUT MODULE
BLDG # 1003A
RACK # R03A10
FANOUT # B

FROM SHEET 6
ASSY # DD9-E2442-5

OUTPUT

| | |
|---|---|
| J2 | SPARE |
| J3 | SPARE |
| J4 | SPARE |
| J5 | SPARE |
| J6 | SPARE |
| J7 | SPARE |
| J8 | SPARE |
| J9 | To CFE-3A-PS2, SLOT 14, T115 REF SHEET 38 |
| J10 | To CFE-3A-PS2, SLOT 13, T115 REF SHEET 37 |
| J11 | To CFE-3A-PS2, SLOT 12, T115 REF SHEET 36 |
| J12 | To CFE-3A-PS2, SLOT 11, T115 REF SHEET 35 |
| J13 | To CFE-3A-PS2, SLOT 10, T115 REF SHEET 34 |
| J14 | To CFE-3A-PS2, SLOT 9, T115 REF SHEET 33 |
| J15 | To CFE-3A-PS2, SLOT 8, T115 REF SHEET 32 |
| J16 | To CFE-3A-PS2, SLOT 7, T115 REF SHEET 31 |
| J17 | To CFE-3A-PS2, SLOT 6, T115 REF SHEET 30 |

| -3 | -2 | -1 | REF DESIGNATOR | ITEM NO. | DESCRIPTION | MAT'L DWG NO./SPEC NO. |
|---|---|---|---|---|---|---|
| QTY REQD | | | | | | |

INTERPRET IN GENERAL ACCORDANCE WITH ASME Y14.24M-1989

UNLESS OTHERWISE SPECIFIED DIMENSIONS ARE IN INCHES

DECIMAL TOLERANCES
.X ±.030
.XX ±.015
.XXX ±.005
ANGULAR TOLERANCE ± .5°

OUTSTANDING ECN

NA FINISH

BREAK SHARP EDGES
MAX. XX MIN. XX

| | | |
|---|---|---|
| Q.A. CATEGORY A-3 | | DATE |
| DRAWN BY | Phil Pape | 10/20/97 |
| CHECKED BY | | |
| DESIGN APPROVAL | | |
| ENGINEER APPROVAL | R. MICHNOFF | 10/20/97 |
| SUPVR. APPROVAL | | |
| NEXT ASSEMBLY | | |

BROOKHAVEN NATIONAL LABORATORY
ASSOCIATED UNIVERSITIES, INC.
UPTON, N.Y. 11973

RHIC CONTROLS WIRING DIAGRAM
ALCOVE 1003A
REAL TIME DATA LINK

SIZE D
94028336
DRAWING NUMBER
REV. A

MATERIAL: ——— SCALE: NA WEIGHT: – SHEET 7 OF 52

*AUTOCAD

| REV. | ZONE | ECN NO. | DATE | BY | CKR | APP. |
|---|---|---|---|---|---|---|

CONTROLS- 7/11/01 9:43 AM 8336_08.dwg

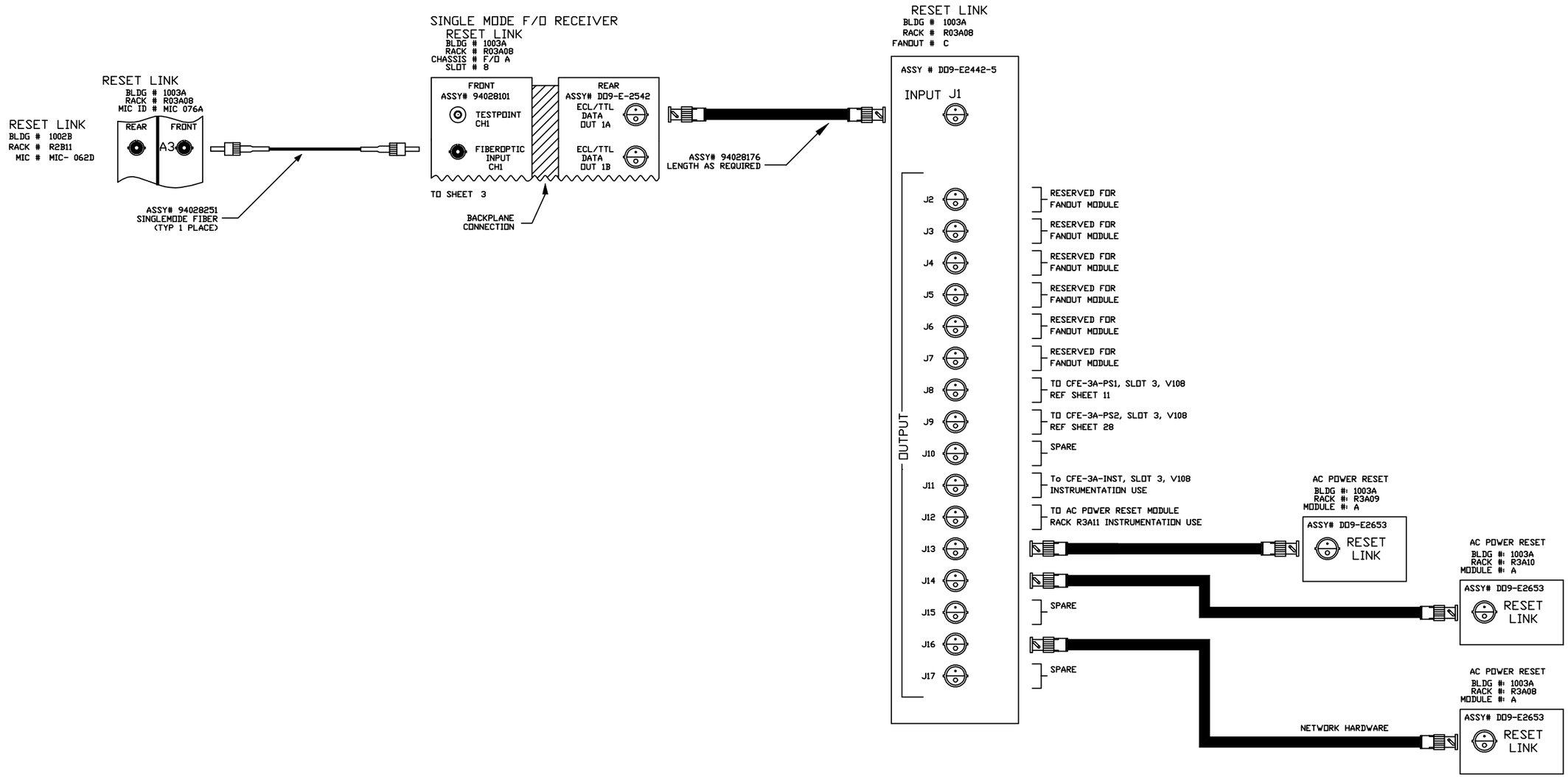


| -3 | -2 | -1 | REF DESIGNATOR | ITEM NO. | DESCRIPTION | MAT'L. DWG NO./INL NO. |
|---|---|---|---|---|---|---|
| QTY REQD | | | | | | |

| | | | |
|---|---|---|---|
| INTERPRET IN GENERAL ACCORDANCE WITH ASME Y14.24M-1989 | Q.A. CATEGORY A-3 | DATE | BROOKHAVEN NATIONAL LABORATORY UPTON, N.Y. 11973 |
| UNLESS OTHERWISE SPECIFIED DIMENSIONS ARE IN INCHES | DRAWN BY Venegas | 8/2/99 | RHIC CONTROLS WIRING DIAGRAM |
| DECIMAL TOLERANCES .X ±.030 .XX ±.015 .XXX ±.005 ANGULAR TOLERANCE ± .5° | CHECKED BY | | ALCOVE 1003A |
| | DESIGN APPROVAL | | RESET LINK |
| | ENGINEER APPROVAL R. MICHNOFF | 10/20/97 | |
| | SUPVR. APPROVAL | | SIZE D — 94028336 — REV. A |
| NA FINISH — BREAK SHARP EDGES MAX. XX MIN. XX | NEXT ASSEMBLY | | DRAWING NUMBER |
| OUTSTANDING ECN | | | MATERIAL: ——— SCALE: NA WEIGHT: – SHEET 8 OF 52 |

*AUTOCAD

CONTROLS- 7/11/01 9:46 AM 8336_09.dwg

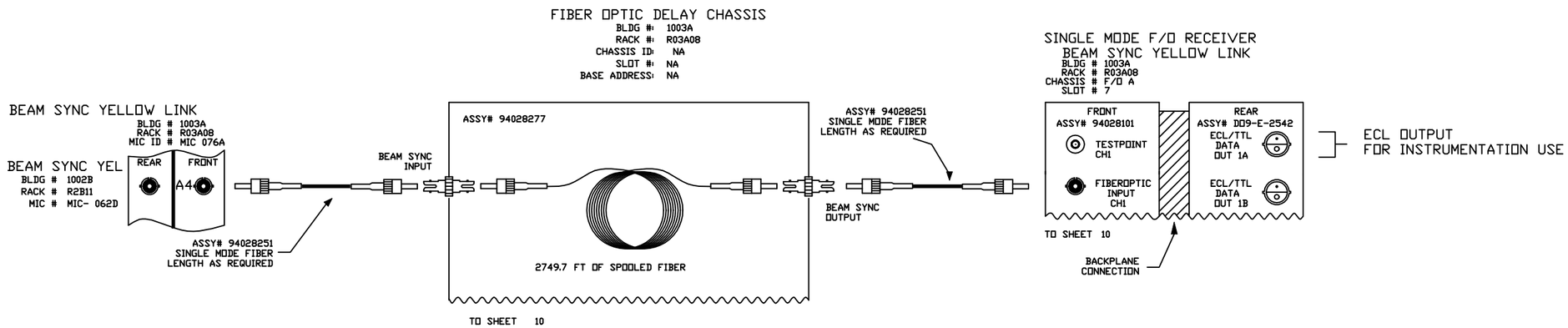


| REV. | ZONE | ECN NO. | DATE | BY | CKR | APP. |
|---|---|---|---|---|---|---|

| -3 | -2 | -1 | REF DESIGNATOR | ITEM NO. | DESCRIPTION | MAT'L. DWG NO.,SPEC. NO. |
|---|---|---|---|---|---|---|
| QTY REQD | | | | | | |

INTERPRET IN GENERAL ACCORDANCE WITH ASME Y14.24M-1989

UNLESS OTHERWISE SPECIFIED DIMENSIONS ARE IN INCHES

DECIMAL TOLERANCES
.X ±.030
.XX ±.015
.XXX ±.005
ANGULAR TOLERANCE
± .5°

NA FINISH

BREAK SHARP EDGES
MAX. XX MIN. XX

OUTSTANDING ECN

| | | |
|---|---|---|
| Q.A. CATEGORY A-3 | | DATE |
| DRAWN BY | Phil Pape | 10/20/97 |
| CHECKED BY | | |
| DESIGN APPROVAL | | |
| ENGINEER APPROVAL | R. MICHNOFF | 10/20/97 |
| SUPVR. APPROVAL | | |

NEXT ASSEMBLY

BROOKHAVEN NATIONAL LABORATORY
UPTON, N.Y. 11973

RHIC CONTROLS WIRING DIAGRAM
ALCOVE 1003A
BEAM SYNC YELLOW LINK

SIZE D
DRAWING NUMBER 94028336
REV. A

MATERIAL: ——— SCALE: NA WEIGHT: – SHEET 9 OF 52

*AUTOCAD

| REV. | ZONE | ECN NO. | DATE | BY | CKR | APP. |
|---|---|---|---|---|---|---|

CONTROLS- 7/11/01 9:49 AM 8336_10.dwg

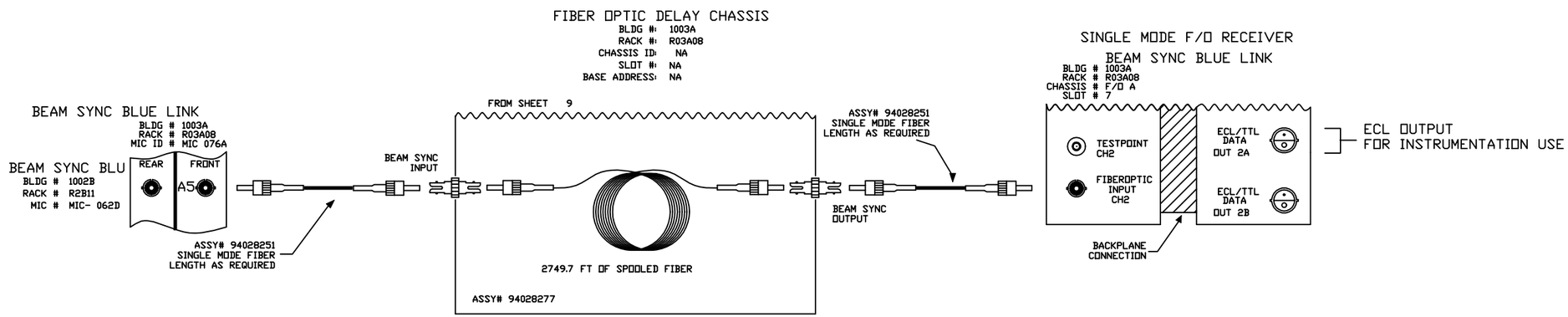


| -3 | -2 | -1 | REF DESIGNATOR | ITEM NO. | DESCRIPTION | MAT'L. DWG NO.,SPEC. NO. |
|---|---|---|---|---|---|---|
| QTY REQD | | | | | | |

INTERPRET IN GENERAL ACCORDANCE WITH ASME Y14.24M-1989

UNLESS OTHERWISE SPECIFIED DIMENSIONS ARE IN INCHES

DECIMAL TOLERANCES
.X ±.030
.XX ±.015
.XXX ±.005
ANGULAR TOLERANCE
± .5°

NA FINISH

BREAK SHARP EDGES
MAX. XX MIN. XX

OUTSTANDING ECN

| | | |
|---|---|---|
| Q.A. CATEGORY A-3 | | DATE |
| DRAWN BY | Phil Pape | 10/21/97 |
| CHECKED BY | | |
| DESIGN APPROVAL | | |
| ENGINEER APPROVAL | R. MICHNOFF | 10/21/97 |
| SUPVR. APPROVAL | | |
| NEXT ASSEMBLY | | |

**BROOKHAVEN NATIONAL LABORATORY**
**UPTON, N.Y. 11973**

RHIC CONTROLS WIRING DIAGRAM

ALCOVE 1003A

**BEAM SYNC BLUE LINK**

SIZE D | DRAWING NUMBER 94028336 | REV. A

MATERIAL: ——— SCALE: NA WEIGHT: – SHEET 10 OF 52

*AUTOCAD

| REV. | ZONE | ECN NO. | DATE | BY | CKR | APP. |
|---|---|---|---|---|---|---|

CONTROLS- 6/13/03 9:33 AM 8336_11.dwg

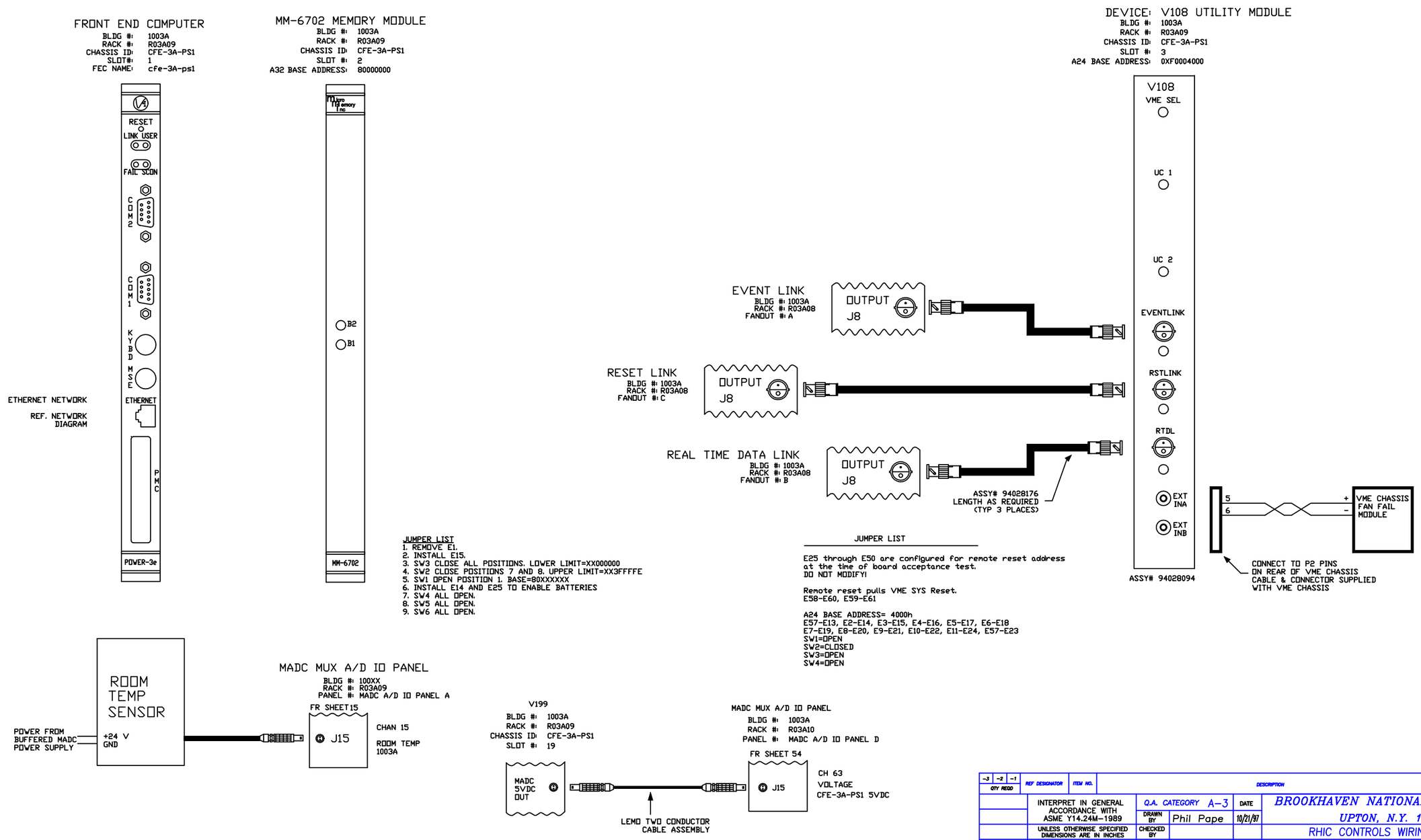


| -3 | -2 | -1 | REF DESIGNATOR | ITEM NO. | DESCRIPTION | MAT'L. DWG NO.,SHL NO. |
|---|---|---|---|---|---|---|
| QTY REQD | | | | | | |

INTERPRET IN GENERAL ACCORDANCE WITH ASME Y14.24M-1989

UNLESS OTHERWISE SPECIFIED DIMENSIONS ARE IN INCHES

DECIMAL TOLERANCES
.X ±.030
.XX ±.015
.XXX ±.005
ANGULAR TOLERANCE ± .5°

OUTSTANDING ECN: NA

FINISH: ✓

BREAK SHARP EDGES MAX. XX MIN. XX

| | | |
|---|---|---|
| Q.A. CATEGORY A-3 | DATE | BROOKHAVEN NATIONAL LABORATORY |
| DRAWN BY Phil Pape | 10/21/97 | UPTON, N.Y. 11973 |
| CHECKED BY | | RHIC CONTROLS WIRING DIAGRAM |
| DESIGN APPROVAL | | ALCOVE 1003A, VME CHASSIS CFE-3A-PS1 |
| ENGINEER APPROVAL R. MICHNOFF | 10/21/97 | CPU/MEMORY /V108 UTIL MODULE |
| SUPVR. APPROVAL | | SIZE D — 94028336 — REV. A |
| NEXT ASSEMBLY | | DRAWING NUMBER |

MATERIAL: ——— SCALE: NA WEIGHT: – SHEET 11

1 *AUTOCAD

| REV. | ZONE | ECN NO. | DATE | BY | CKR | APP. |
|---|---|---|---|---|---|---|

CONTROLS- 7/11/01 10:28 AM 8336_12.dwg

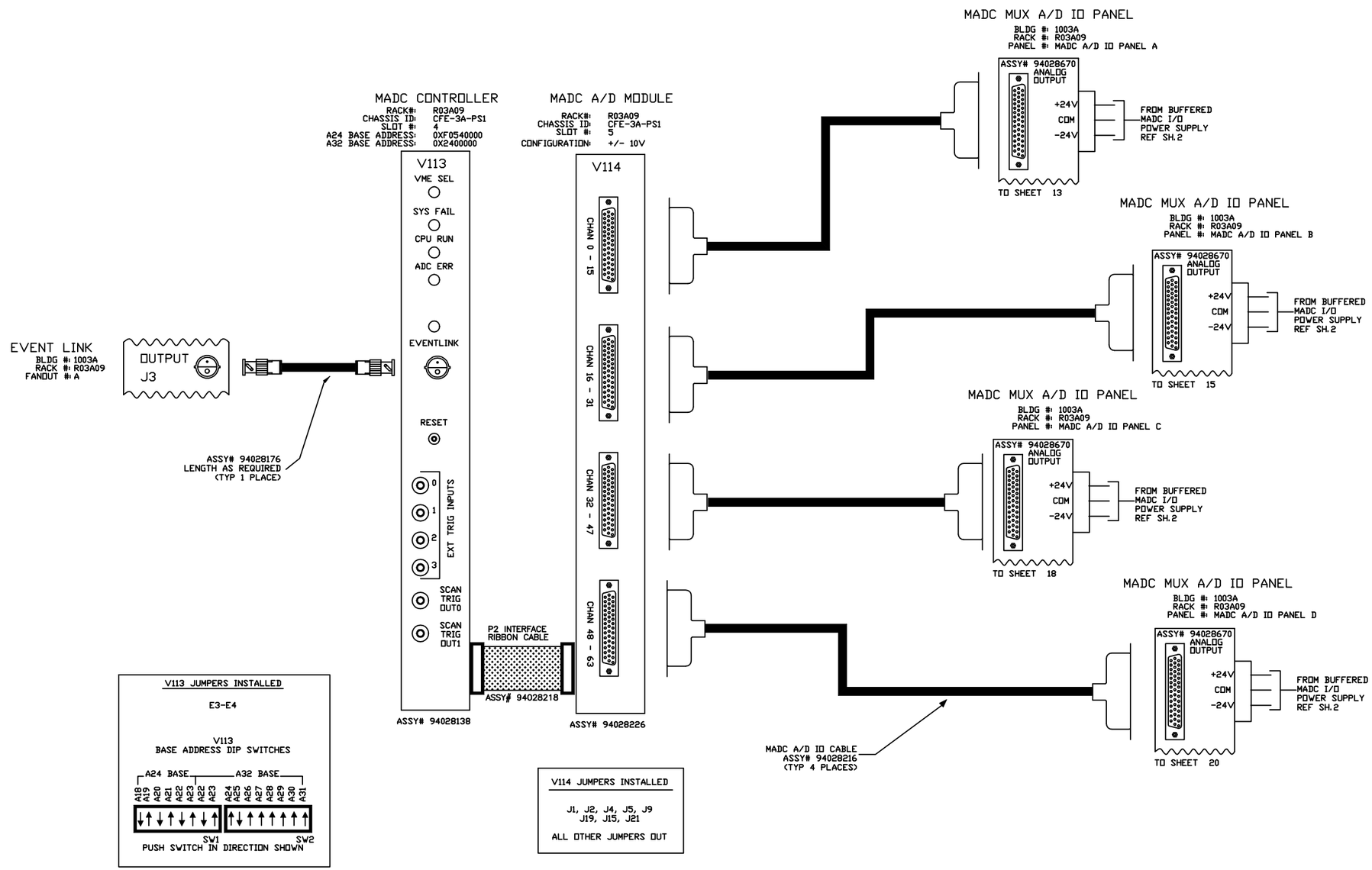


**V113 JUMPERS INSTALLED**

E3-E4

V113
BASE ADDRESS DIP SWITCHES




PUSH SWITCH IN DIRECTION SHOWN

**V114 JUMPERS INSTALLED**

J1, J2, J4, J5, J9
J19, J15, J21

ALL OTHER JUMPERS OUT

| -3 | -2 | -1 | REF DESIGNATOR | ITEM NO. | DESCRIPTION | MAT'L DWG NO./BHL NO. |
|---|---|---|---|---|---|---|
| QTY REQD | | | | | | |

INTERPRET IN GENERAL ACCORDANCE WITH ASME Y14.24M-1989

UNLESS OTHERWISE SPECIFIED DIMENSIONS ARE IN INCHES

DECIMAL TOLERANCES
.X ±.030
.XX ±.015
.XXX ±.005
ANGULAR TOLERANCE
± .5°

FINISH: NA

BREAK SHARP EDGES
MAX. XX MIN. XX

OUTSTANDING ECN

| | | |
|---|---|---|
| Q.A. CATEGORY A-3 | | DATE |
| DRAWN BY | Phil Pape | 10/21/97 |
| CHECKED BY | | |
| DESIGN APPROVAL | | |
| ENGINEER APPROVAL | R. MICHNOFF | 10/21/97 |
| SUPVR. APPROVAL | | |

NEXT ASSEMBLY

BROOKHAVEN NATIONAL LABORATORY
UPTON, N.Y. 11973

RHIC CONTROLS WIRING DIAGRAM

ALCOVE 1003A, VME CHASSIS CFE-3A-PS1

MADC SYSTEM

SIZE D | DRAWING NUMBER 94028336 | REV. A

MATERIAL: ——— SCALE: NA WEIGHT: – SHEET 12 OF 52

*AUTOCAD

| REV. | ZONE | ECN NO. | DATE | BY | CKR | APP. |
|---|---|---|---|---|---|---|

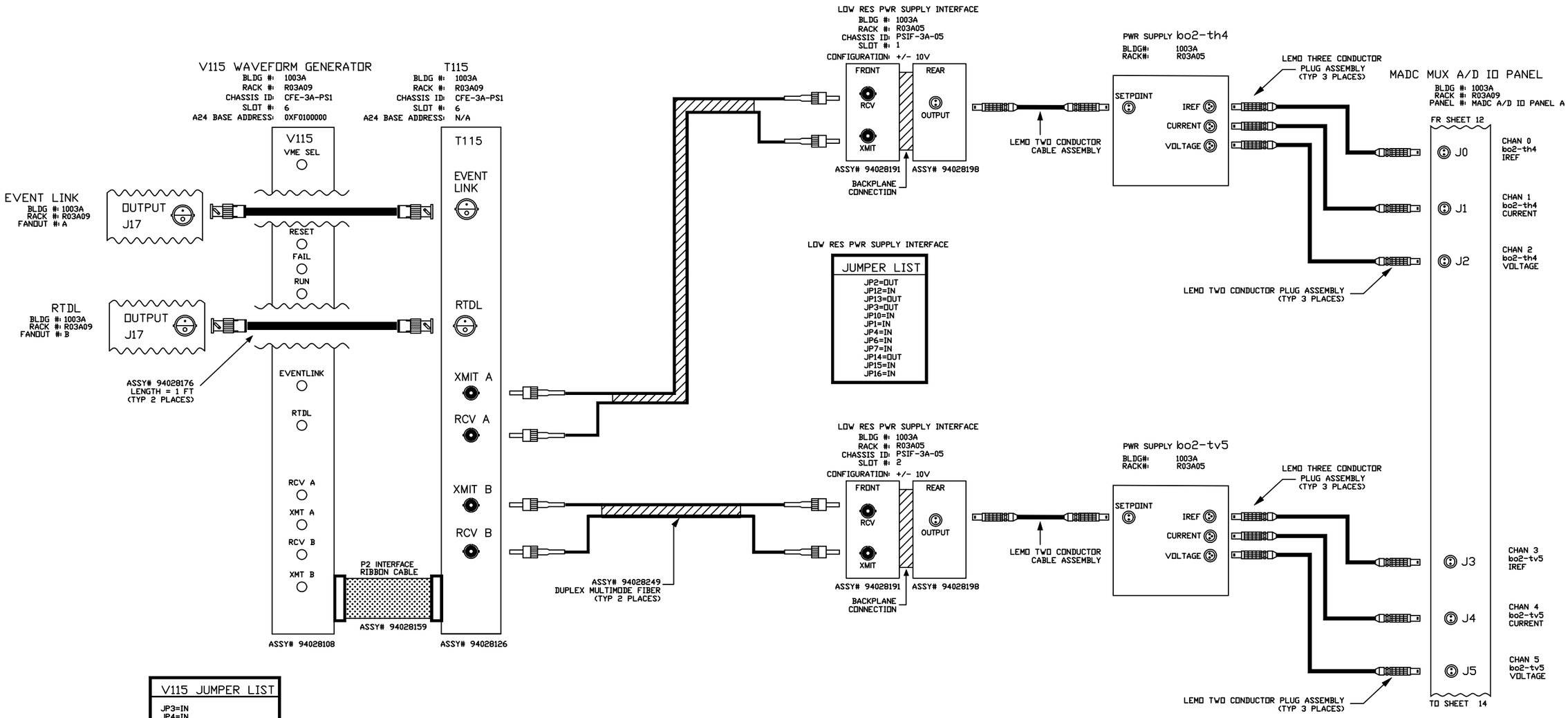


| V115 JUMPER LIST |
|---|
| JP3=IN<br>JP4=IN<br>JP1=OUT<br>JP2=OUT |
| A24 BASE ADDRESS<br>JB1-A23=IN<br>JB1-A22=IN<br>JB1-A21=IN<br>JB1-A20=OUT<br>JB1-A19=IN<br>JB1-A18=IN |

| -3 | -2 | -1 | REF DESIGNATOR | ITEM NO. | DESCRIPTION | MAT'L DWG NO./INL NO. |
|---|---|---|---|---|---|---|
| QTY REQD | | | | | | |

INTERPRET IN GENERAL ACCORDANCE WITH ASME Y14.24M-1989

UNLESS OTHERWISE SPECIFIED DIMENSIONS ARE IN INCHES

DECIMAL TOLERANCES
.X ±.030
.XX ±.015
.XXX ±.005
ANGULAR TOLERANCE
± .5°

NA FINISH

BREAK SHARP EDGES
MAX. XX MIN. XX

OUTSTANDING ECN

| | | |
|---|---|---|
| Q.A. CATEGORY A-3 | | DATE |
| DRAWN BY | Phil Pape | 10/21/97 |
| CHECKED BY | | |
| DESIGN APPROVAL | | |
| ENGINEER APPROVAL | R. MICHNOFF | 10/21/97 |
| SUPVR. APPROVAL | | |

NEXT ASSEMBLY

BROOKHAVEN NATIONAL LABORATORY
ASSOCIATED UNIVERSITIES, INC.
UPTON, N.Y. 11973

RHIC CONTROLS WIRING DIAGRAM
ALCOVE 1003A, CFE-3A-PS1
POWER SUPPLY bo2-th4/bo2-tv5

SIZE D
DRAWING NUMBER 94028336
REV. A

MATERIAL: ——— SCALE: NA WEIGHT: – SHEET 13

*AUTOCAD

| REV. | ZONE | ECN NO. | DATE | BY | CKR | APP. |
|---|---|---|---|---|---|---|

CONTROLS- 6/13/03 9:35 AM 8336_14.dwg

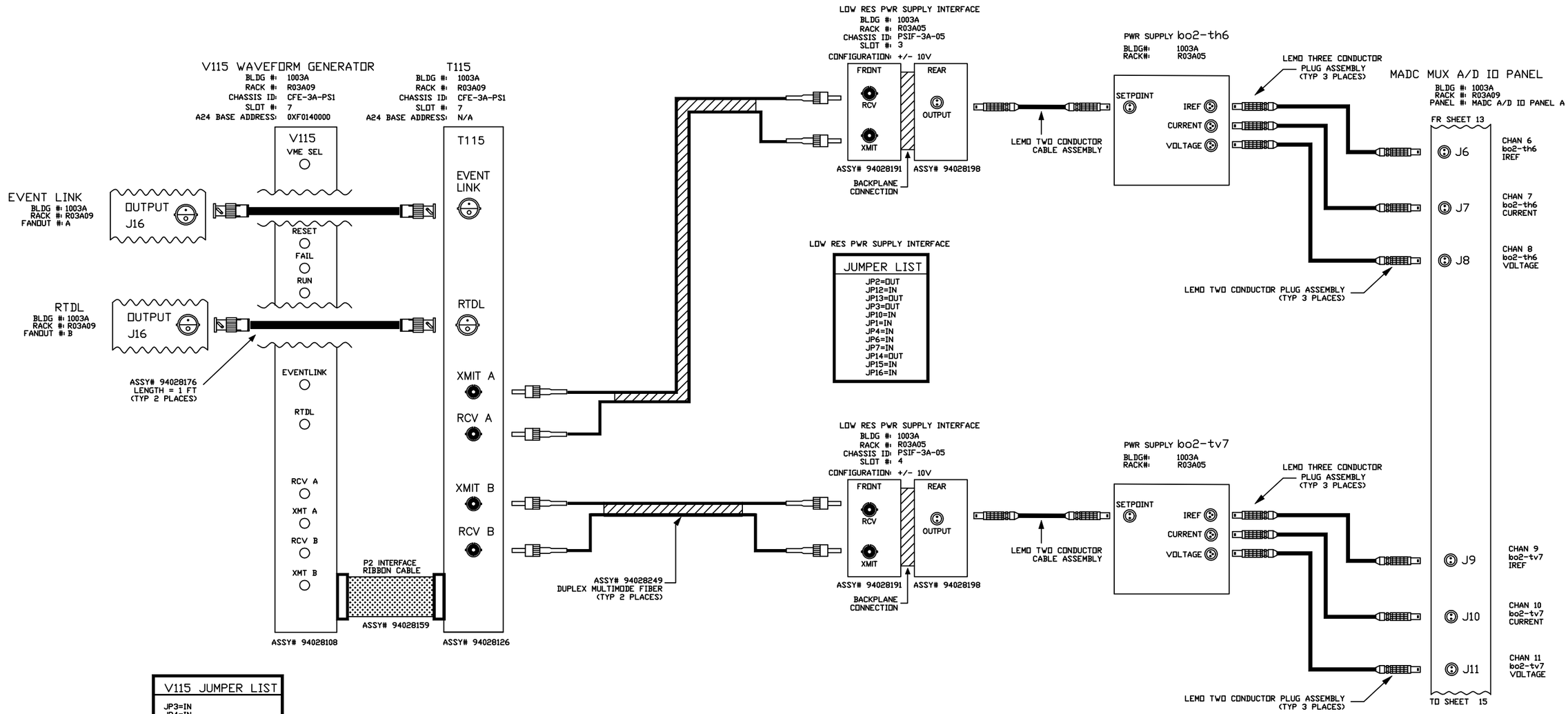


| V115 JUMPER LIST |
|---|
| JP3=IN<br>JP4=IN<br>JP1=OUT<br>JP2=OUT |
| A24 BASE ADDRESS<br>JB1-A23=IN<br>JB1-A22=IN<br>JB1-A21=IN<br>JB1-A20=OUT<br>JB1-A19=IN<br>JB1-A18=OUT |

| -3 | -2 | -1 | REF DESIGNATOR | ITEM NO. | DESCRIPTION | MAT'L DWG NO./INL NO. |
|---|---|---|---|---|---|---|
| QTY REQD | | | | | | |

INTERPRET IN GENERAL ACCORDANCE WITH ASME Y14.24M-1989

UNLESS OTHERWISE SPECIFIED DIMENSIONS ARE IN INCHES

DECIMAL TOLERANCES
.X ±.030
.XX ±.015
.XXX ±.005
ANGULAR TOLERANCE
± .5°

NA FINISH

BREAK SHARP EDGES
MAX. XX MIN. XX

OUTSTANDING ECN

| | | |
|---|---|---|
| Q.A. CATEGORY A-3 | | DATE |
| DRAWN BY | Phil Pape | 10/21/97 |
| CHECKED BY | | |
| DESIGN APPROVAL | | |
| ENGINEER APPROVAL | R. MICHNOFF | 10/21/97 |
| SUPVR. APPROVAL | | |

NEXT ASSEMBLY

BROOKHAVEN NATIONAL LABORATORY
ASSOCIATED UNIVERSITIES, INC.
UPTON, N.Y. 11973

RHIC CONTROLS WIRING DIAGRAM

ALCOVE 1003A, CFE-3A-PS1

POWER SUPPLY bo2-th6/bo2-tv7

SIZE D | DRAWING NUMBER 94028336 | REV. A

MATERIAL: ——— SCALE: NA WEIGHT: – SHEET 14

*AUTOCAD

| REV. | ZONE | ECN NO. | DATE | BY | CKR | APP. |
|---|---|---|---|---|---|---|

CONTROLS- 6/13/03 9:37 AM 8336_15.dwg

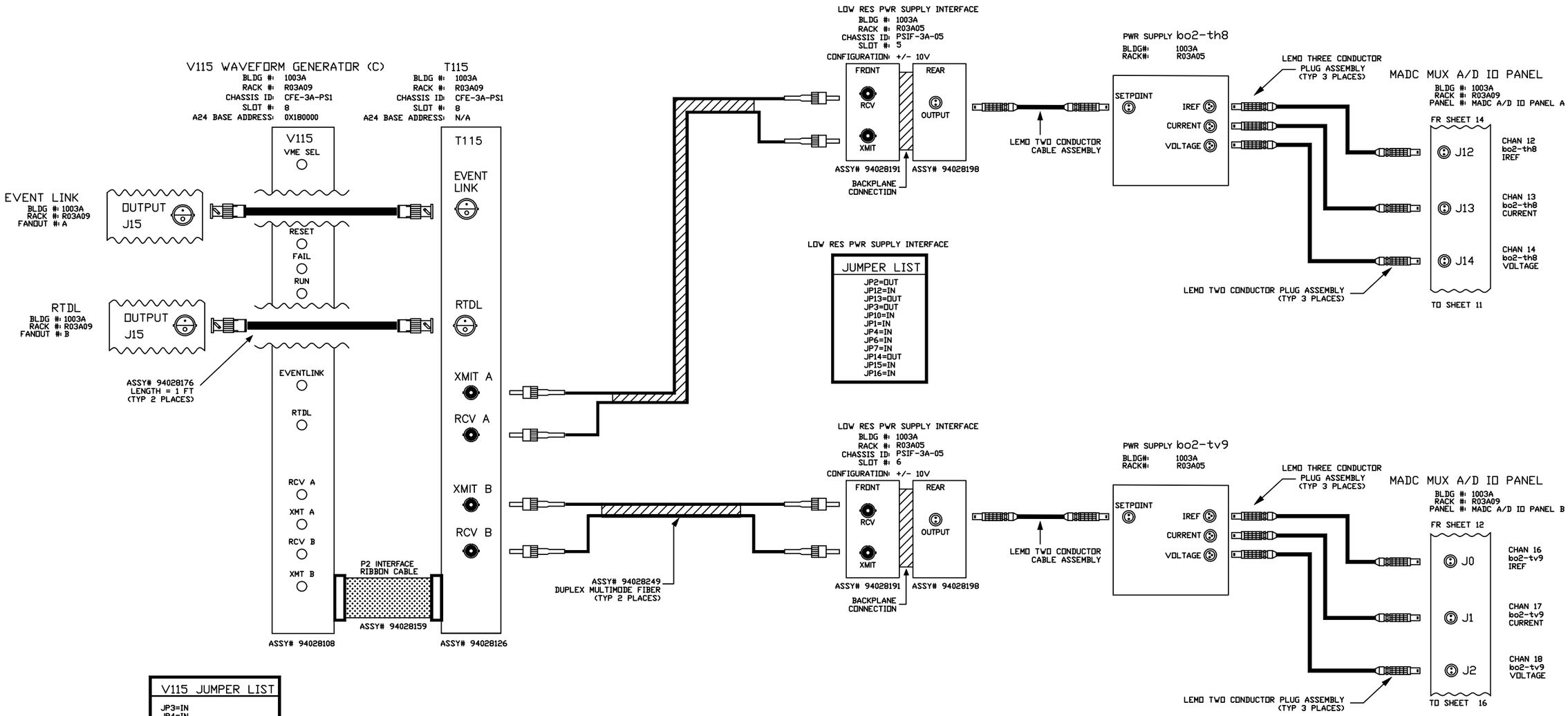


| V115 JUMPER LIST |
|---|
| JP3=IN<br>JP4=IN<br>JP1=OUT<br>JP2=OUT |
| A24 BASE ADDRESS<br>JB1-A23=IN<br>JB1-A22=IN<br>JB1-A21=IN<br>JB1-A20=OUT<br>JB1-A19=OUT<br>JB1-A18=IN |

| -3 | -2 | -1 | REF DESIGNATOR | ITEM NO. | DESCRIPTION | MAT'L DWG NO./INL NO. |
|---|---|---|---|---|---|---|
| QTY REQD | | | | | | |

INTERPRET IN GENERAL ACCORDANCE WITH ASME Y14.24M-1989

UNLESS OTHERWISE SPECIFIED DIMENSIONS ARE IN INCHES

DECIMAL TOLERANCES
.X ±.030
.XX ±.015
.XXX ±.005
ANGULAR TOLERANCE
± .5°

NA FINISH

BREAK SHARP EDGES
MAX. XX MIN. XX

OUTSTANDING ECN

| | | |
|---|---|---|
| Q.A. CATEGORY A-3 | | DATE |
| DRAWN BY | Phil Pape | 10/21/97 |
| CHECKED BY | | |
| DESIGN APPROVAL | | |
| ENGINEER APPROVAL | R. MICHNOFF | 10/21/97 |
| SUPVR. APPROVAL | | |
| NEXT ASSEMBLY | | |

BROOKHAVEN NATIONAL LABORATORY
UPTON, N.Y. 11973

RHIC CONTROLS WIRING DIAGRAM

ALCOVE 1003A, CFE-3A-PS1

POWER SUPPLY bo2-th8/bo2-tv9

SIZE D | DRAWING NUMBER 94028336 | REV. A

MATERIAL: ——— SCALE: NA WEIGHT: – SHEET 15

1 *AUTOCAD

| REV. | ZONE | ECN NO. | DATE | BY | CKR | APP. |
|---|---|---|---|---|---|---|

CONTROLS- 6/13/03 9:39 AM 8336_16.dwg

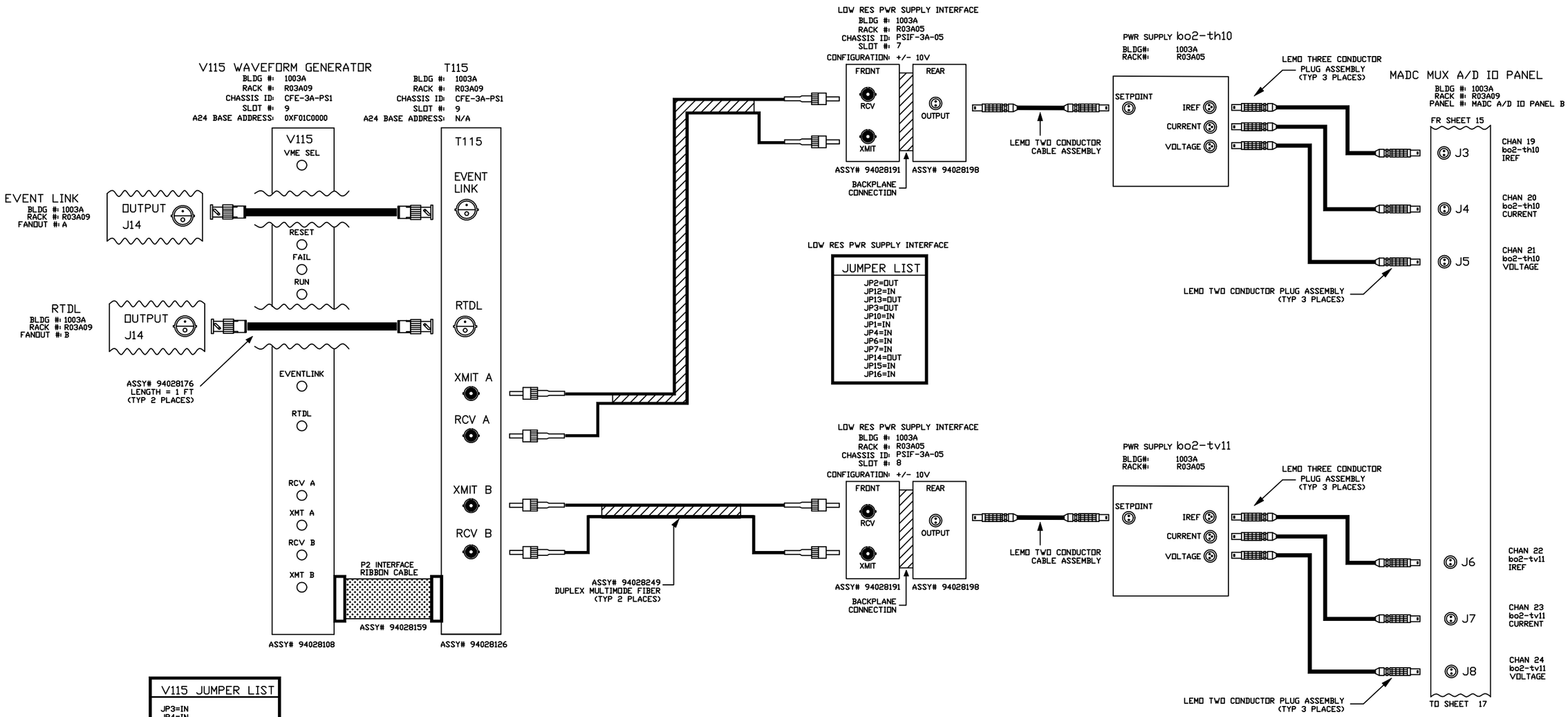


| V115 JUMPER LIST |
|---|
| JP3=IN<br>JP4=IN<br>JP1=OUT<br>JP2=OUT |
| A24 BASE ADDRESS<br>JB1-A23=IN<br>JB1-A22=IN<br>JB1-A21=IN<br>JB1-A20=OUT<br>JB1-A19=OUT<br>JB1-A18=OUT |

| -3 | -2 | -1 | REF DESIGNATOR | ITEM NO. | DESCRIPTION | MAT'L DWG NO./INL NO. |
|---|---|---|---|---|---|---|
| QTY REQD | | | | | | |

| | | | |
|---|---|---|---|
| INTERPRET IN GENERAL ACCORDANCE WITH ASME Y14.24M-1989 | Q.A. CATEGORY A-3 | DATE | BROOKHAVEN NATIONAL LABORATORY<br>ASSOCIATED UNIVERSITIES, INC.<br>UPTON, N.Y. 11973 |
| | DRAWN BY Phil Pape | 10/21/97 | |
| UNLESS OTHERWISE SPECIFIED DIMENSIONS ARE IN INCHES | CHECKED BY | | RHIC CONTROLS WIRING DIAGRAM |
| DECIMAL TOLERANCES .X ±.030 .XX ±.015 .XXX ±.005 ANGULAR TOLERANCE ± .5° | DESIGN APPROVAL | | ALCOVE 1003A, CFE-3A-PS1 |
| | ENGINEER APPROVAL R. MICHNOFF | 10/21/97 | POWER SUPPLY bo2-th10/bo2-tv11 |
| | SUPVR. APPROVAL | | SIZE D — DRAWING NUMBER 94028336 — REV. A |
| NA FINISH | BREAK SHARP EDGES MAX. XX MIN. XX | NEXT ASSEMBLY | MATERIAL: — SCALE: NA WEIGHT: – SHEET 16 |
| OUTSTANDING ECN | | | |

1 *AUTOCAD

| REV. | ZONE | ECN NO. | DATE | BY | CKR | APP. |
|---|---|---|---|---|---|---|

CONTROLS- 6/13/03 9:40 AM 8336_17.dwg

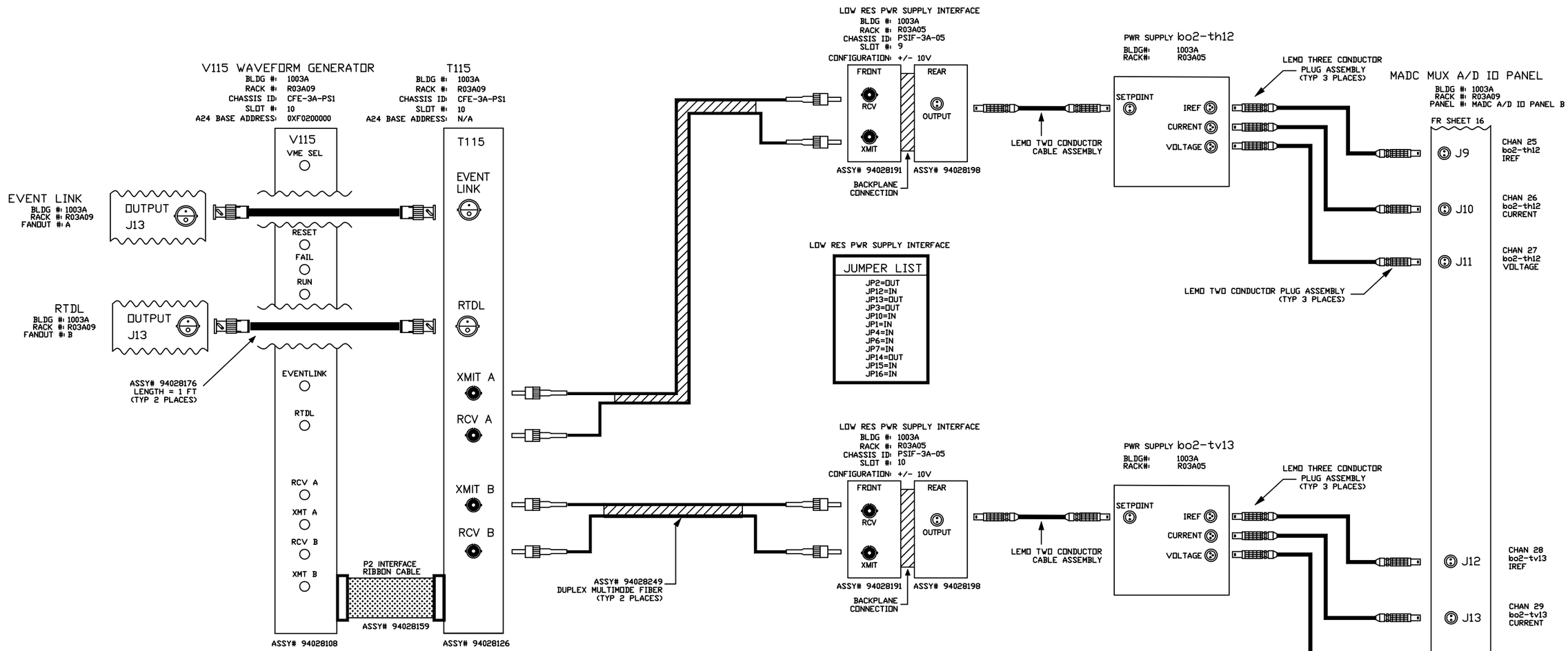


| V115 JUMPER LIST |
|---|
| JP3=IN<br>JP4=IN<br>JP1=OUT<br>JP2=OUT |
| A24 BASE ADDRESS<br>JB1-A23=IN<br>JB1-A22=IN<br>JB1-A21=OUT<br>JB1-A20=IN<br>JB1-A19=IN<br>JB1-A18=IN |

| -3 | -2 | -1 | REF DESIGNATOR | ITEM NO. | DESCRIPTION | MAT'L DWG NO./INL NO. |
|---|---|---|---|---|---|---|
| QTY REQD | | | | | | |

| | | | |
|---|---|---|---|
| INTERPRET IN GENERAL ACCORDANCE WITH ASME Y14.24M-1989 | Q.A. CATEGORY A-3 | DATE | BROOKHAVEN NATIONAL LABORATORY<br>ASSOCIATED UNIVERSITIES, INC.<br>UPTON, N.Y. 11973 |
| | DRAWN BY Phil Pape | 10/21/97 | |
| UNLESS OTHERWISE SPECIFIED DIMENSIONS ARE IN INCHES | CHECKED BY | | RHIC CONTROLS WIRING DIAGRAM |
| DECIMAL TOLERANCES .X ±.030 .XX ±.015 .XXX ±.005 ANGULAR TOLERANCE ± .5° | DESIGN APPROVAL | | ALCOVE 1003A, CFE-3A-PS1 |
| | ENGINEER APPROVAL R. MICHNOFF | 10/21/97 | POWER SUPPLY bo2-th12/bo2-tv13 |
| | SUPVR. APPROVAL | | SIZE D — DRAWING NUMBER 94028336 — REV. A |
| NA FINISH — BREAK SHARP EDGES MAX. XX MIN. XX | NEXT ASSEMBLY | | MATERIAL: — SCALE: NA WEIGHT: – SHEET 17 |
| OUTSTANDING ECN | | | |

*AUTOCAD

| REV. | ZONE | ECN NO. | DATE | BY | CKR | APP. |
|---|---|---|---|---|---|---|

CONTROLS- 6/13/03 9:43 AM 8336_18.dwg

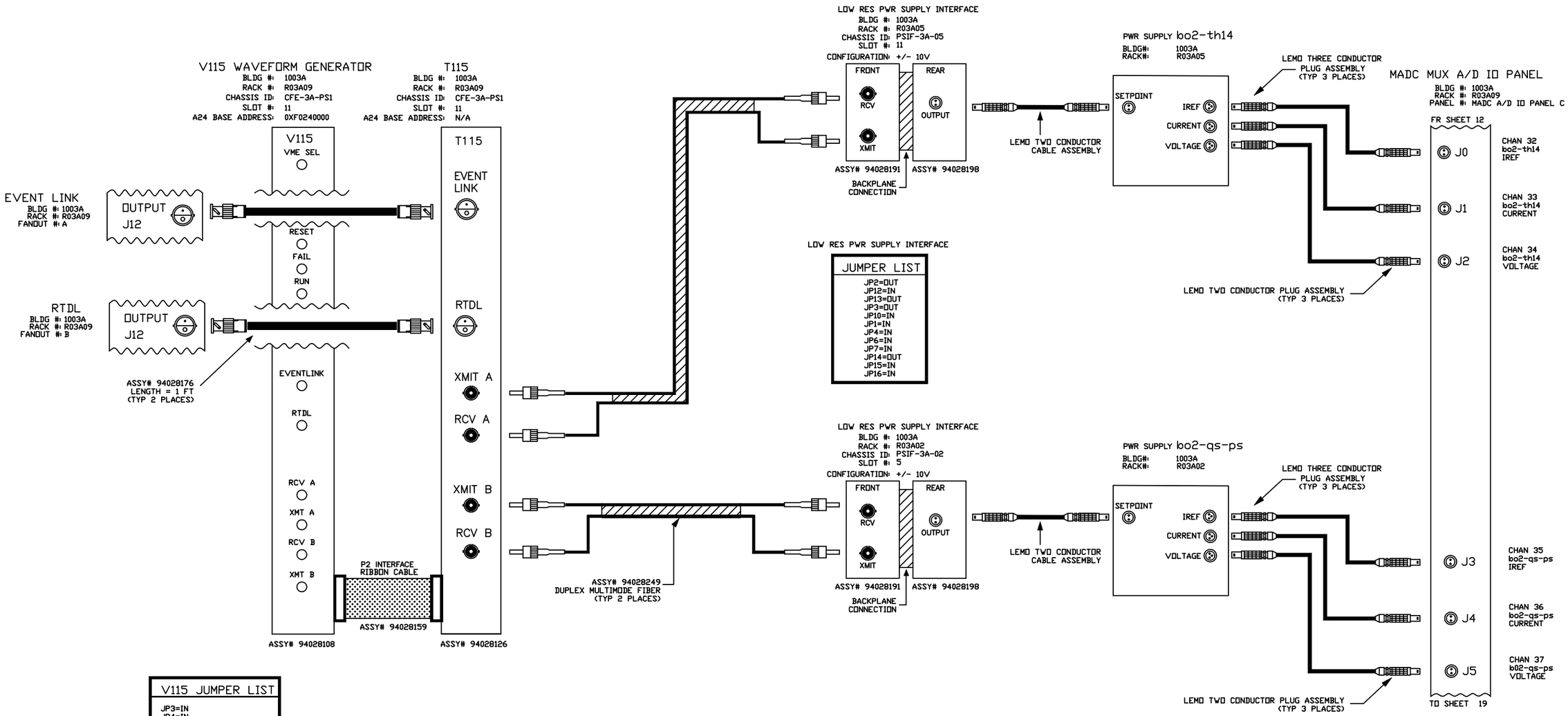


| V115 JUMPER LIST |
|---|
| JP3=IN<br>JP4=IN<br>JP1=OUT<br>JP2=OUT |
| A24 BASE ADDRESS<br>JB1-A23=IN<br>JB1-A22=IN<br>JB1-A21=OUT<br>JB1-A20=IN<br>JB1-A19=IN<br>JB1-A18=OUT |

| -3 | -2 | -1 | REF DESIGNATOR | ITEM NO. | DESCRIPTION | MAT'L DWG NO./INL NO. |
|---|---|---|---|---|---|---|
| QTY REQD | | | | | | |

INTERPRET IN GENERAL ACCORDANCE WITH ASME Y14.24M-1989

UNLESS OTHERWISE SPECIFIED DIMENSIONS ARE IN INCHES

DECIMAL TOLERANCES
.X ±.030
.XX ±.015
.XXX ±.005
ANGULAR TOLERANCE
± .5°

FINISH: NA

BREAK SHARP EDGES MAX. XX MIN. XX

OUTSTANDING ECN

| | | |
|---|---|---|
| Q.A. CATEGORY A-3 | | DATE |
| DRAWN BY | Phil Pape | 10/21/97 |
| CHECKED BY | | |
| DESIGN APPROVAL | | |
| ENGINEER APPROVAL | R. MICHNOFF | 10/21/97 |
| SUPVR. APPROVAL | | |

NEXT ASSEMBLY

BROOKHAVEN NATIONAL LABORATORY
ASSOCIATED UNIVERSITIES, INC.
UPTON, N.Y. 11973

RHIC CONTROLS WIRING DIAGRAM
ALCOVE 1003A, CFE-3A-PS1
POWER SUPPLY bo2-th14/bo2-qs-ps

SIZE D
DRAWING NUMBER 94028336
REV. A

MATERIAL: ——— SCALE: NA WEIGHT: – SHEET 18

*AUTOCAD

| REV. | ZONE | ECN NO. | DATE | BY | CKR | APP. |
|---|---|---|---|---|---|---|

CONTROLS- 6/13/03 9:44 AM 8336_19.dwg

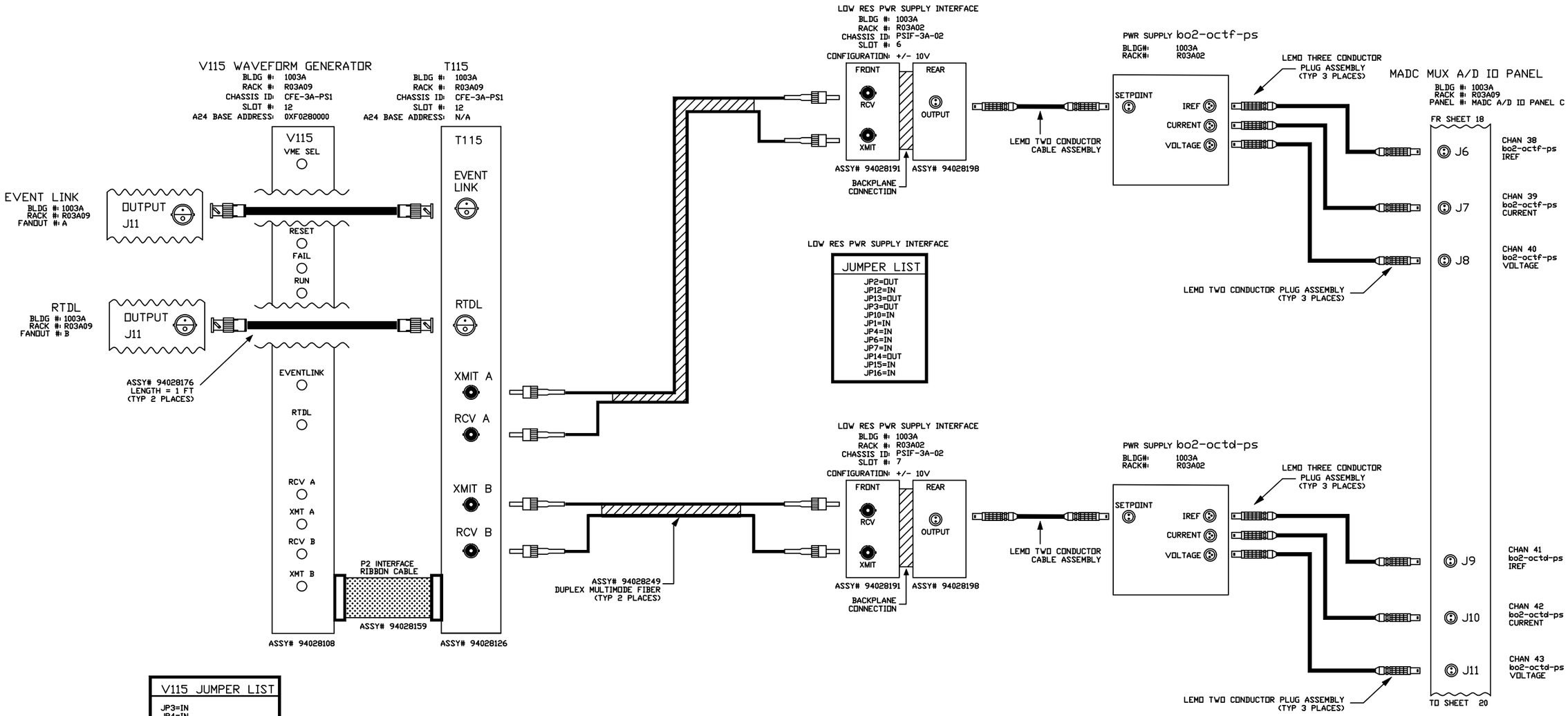


| V115 JUMPER LIST |
|---|
| JP3=IN<br>JP4=IN<br>JP1=OUT<br>JP2=OUT |
| A24 BASE ADDRESS<br>JB1-A23=IN<br>JB1-A22=IN<br>JB1-A21=OUT<br>JB1-A20=IN<br>JB1-A19=OUT<br>JB1-A18=IN |

| -3 | -2 | -1 | REF DESIGNATOR | ITEM NO. | DESCRIPTION | MAT'L DWG NO./INL NO. |
|---|---|---|---|---|---|---|
| QTY REQD | | | | | | |

INTERPRET IN GENERAL ACCORDANCE WITH ASME Y14.24M-1989

UNLESS OTHERWISE SPECIFIED DIMENSIONS ARE IN INCHES

DECIMAL TOLERANCES
.X ±.030
.XX ±.015
.XXX ±.005
ANGULAR TOLERANCE
± .5°

NA FINISH

BREAK SHARP EDGES
MAX. XX MIN. XX

OUTSTANDING ECN

Q.A. CATEGORY A-3 DATE

| | | |
|---|---|---|
| DRAWN BY | Phil Pape | 10/21/97 |
| CHECKED BY | | |
| DESIGN APPROVAL | | |
| ENGINEER APPROVAL | R. MICHNOFF | 10/21/97 |
| SUPVR. APPROVAL | | |

NEXT ASSEMBLY

BROOKHAVEN NATIONAL LABORATORY
ASSOCIATED UNIVERSITIES, INC.
UPTON, N.Y. 11973

RHIC CONTROLS WIRING DIAGRAM
ALCOVE 1003A, CFE-3A-PS1
PWRSPLY bo2-octf-ps/bo2-octd-ps

SIZE D
DRAWING NUMBER 94028336
REV. A

MATERIAL: ——— SCALE: NA WEIGHT: – SHEET 19

*AUTOCAD

| REV. | ZONE | ECN NO. | DATE | BY | CKR | APP. |
|---|---|---|---|---|---|---|

CONTROLS- 6/13/03 9:46 AM 8336_20.dwg

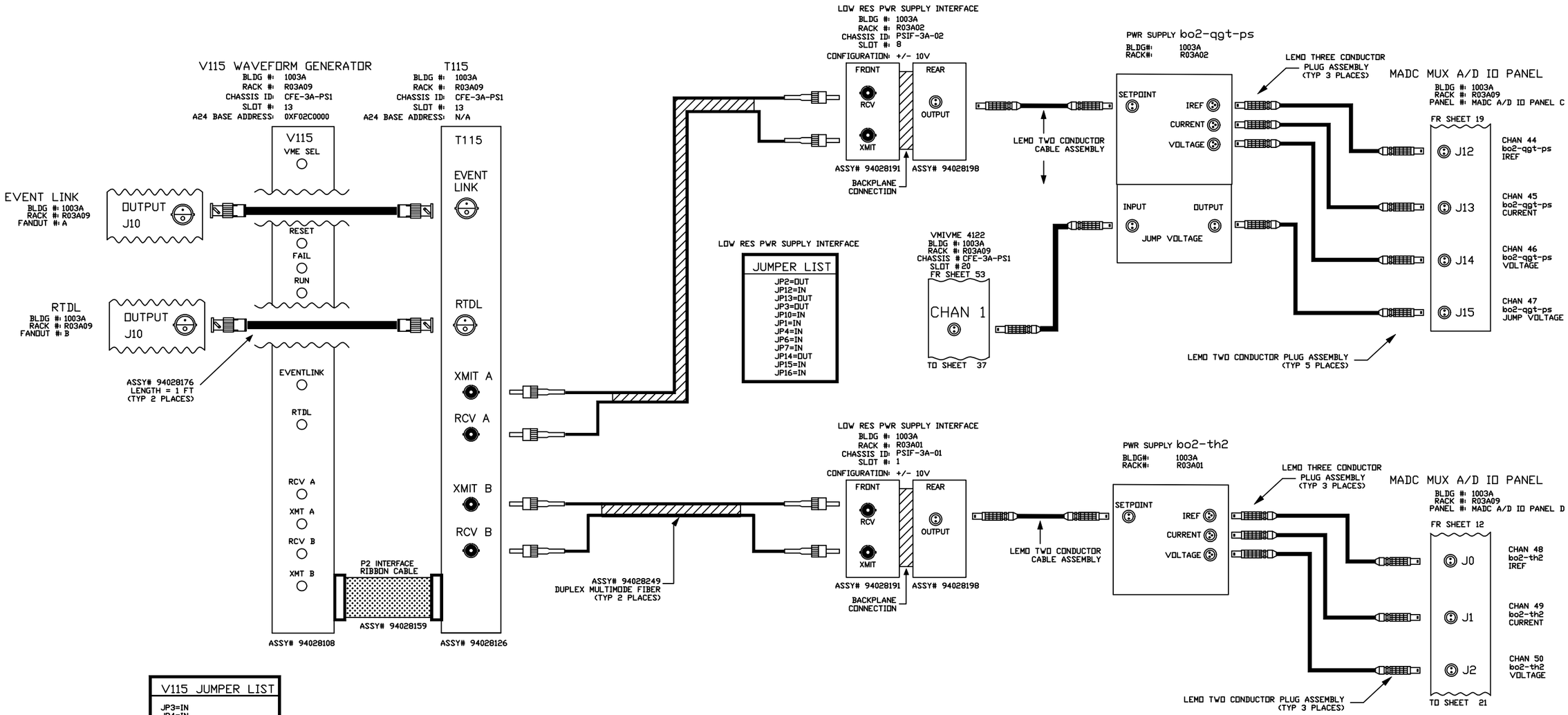


| V115 JUMPER LIST |
|---|
| JP3=IN<br>JP4=IN<br>JP1=OUT<br>JP2=OUT |
| A24 BASE ADDRESS<br>JB1-A23=IN<br>JB1-A22=IN<br>JB1-A21=OUT<br>JB1-A20=IN<br>JB1-A19=OUT<br>JB1-A18=OUT |

| -3 | -2 | -1 | REF DESIGNATOR | ITEM NO. | DESCRIPTION | MAT'L DWG NO./INL NO. |
|---|---|---|---|---|---|---|
| QTY REQD | | | | | | |

INTERPRET IN GENERAL ACCORDANCE WITH ASME Y14.24M-1989

UNLESS OTHERWISE SPECIFIED DIMENSIONS ARE IN INCHES

DECIMAL TOLERANCES
.X ±.030
.XX ±.015
.XXX ±.005
ANGULAR TOLERANCE
± .5°

NA FINISH

BREAK SHARP EDGES
MAX. XX MIN. XX

OUTSTANDING ECN

| | | |
|---|---|---|
| Q.A. CATEGORY A-3 | | DATE |
| DRAWN BY | Phil Pape | 10/21/97 |
| CHECKED BY | | |
| DESIGN APPROVAL | | |
| ENGINEER APPROVAL | R. MICHNOFF | 10/21/97 |
| SUPVR. APPROVAL | | |

NEXT ASSEMBLY

BROOKHAVEN NATIONAL LABORATORY
UPTON, N.Y. 11973

RHIC CONTROLS WIRING DIAGRAM
ALCOVE 1003A, CFE-3A-PS1
PWR SPLY bo2-qgt-ps/bo2-th2

SIZE D
DRAWING NUMBER 94028336
REV. A

MATERIAL: ——— SCALE: NA WEIGHT: – SHEET 20

*AUTOCAD

| REV. | ZONE | ECN NO. | DATE | BY | CKR | APP. |
|---|---|---|---|---|---|---|

CONTROLS- 6/13/03 9:47 AM 8336_21.dwg

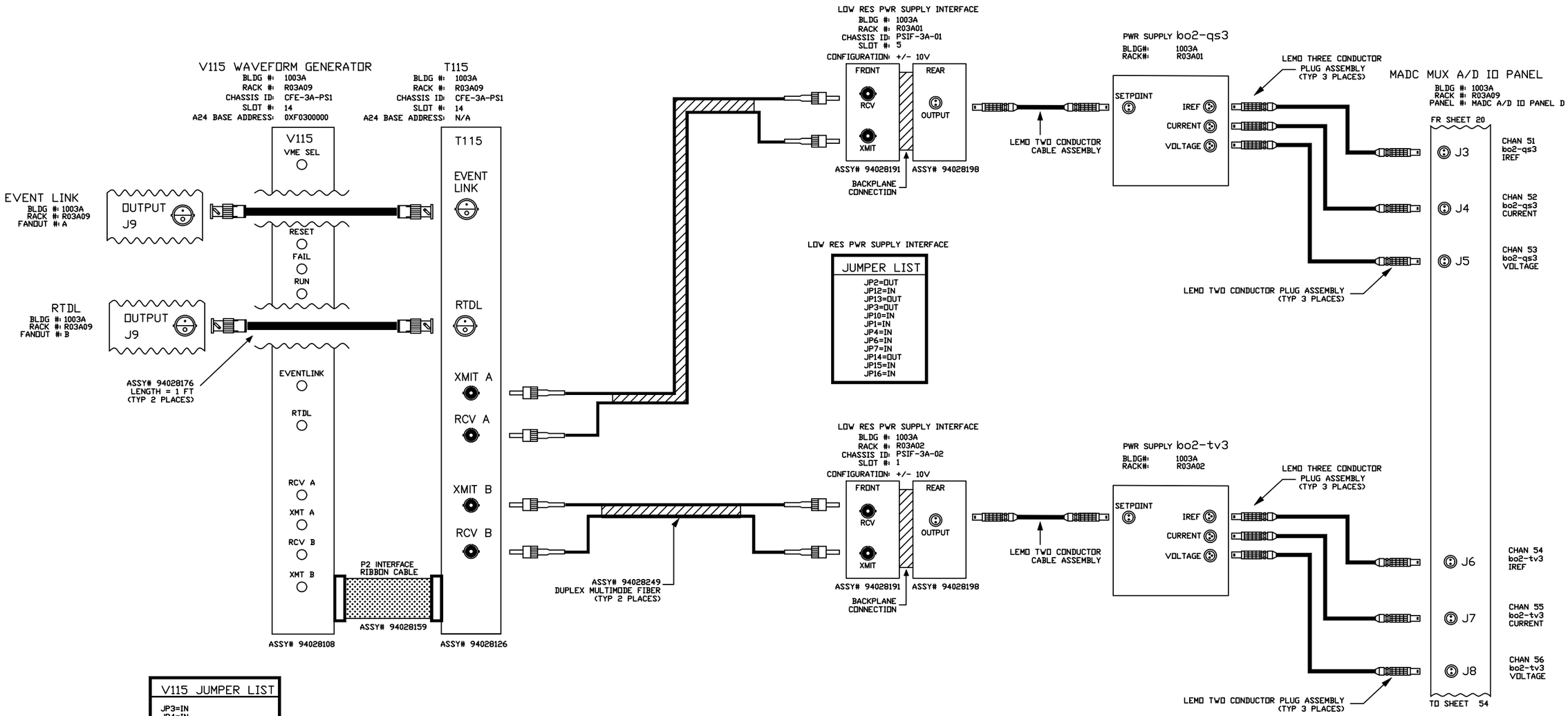


| V115 JUMPER LIST |
|---|
| JP3=IN<br>JP4=IN<br>JP1=OUT<br>JP2=OUT |
| A24 BASE ADDRESS<br>JB1-A23=IN<br>JB1-A22=IN<br>JB1-A21=OUT<br>JB1-A20=OUT<br>JB1-A19=IN<br>JB1-A18=IN |

| -3 | -2 | -1 | REF DESIGNATOR | ITEM NO. | DESCRIPTION | MAT'L DWG NO./INL NO. |
|---|---|---|---|---|---|---|
| QTY REQD | | | | | | |

INTERPRET IN GENERAL ACCORDANCE WITH ASME Y14.24M-1989

UNLESS OTHERWISE SPECIFIED DIMENSIONS ARE IN INCHES

DECIMAL TOLERANCES
.X ±.030
.XX ±.015
.XXX ±.005
ANGULAR TOLERANCE
± .5°

NA FINISH

BREAK SHARP EDGES
MAX. XX MIN. XX

OUTSTANDING ECN

Q.A. CATEGORY A-3 DATE

| | | |
|---|---|---|
| DRAWN BY | Phil Pape | 10/21/97 |
| CHECKED BY | | |
| DESIGN APPROVAL | | |
| ENGINEER APPROVAL | R. MICHNOFF | 10/21/97 |
| SUPVR. APPROVAL | | |

NEXT ASSEMBLY

BROOKHAVEN NATIONAL LABORATORY
ASSOCIATED UNIVERSITIES, INC.
UPTON, N.Y. 11973

RHIC CONTROLS WIRING DIAGRAM

ALCOVE 1003A, CFE-3A-PS1

POWER SUPPLY bo2-qs3/bo2-tv3

SIZE D | DRAWING NUMBER 94028336 | REV. A

MATERIAL: ——— SCALE: NA WEIGHT: – SHEET 21

*AUTOCAD

| REV. | ZONE | ECN NO. | DATE | BY | CKR | APP. |
|---|---|---|---|---|---|---|

CONTROLS- 6/13/03 9:50 AM 8336_28.dwg

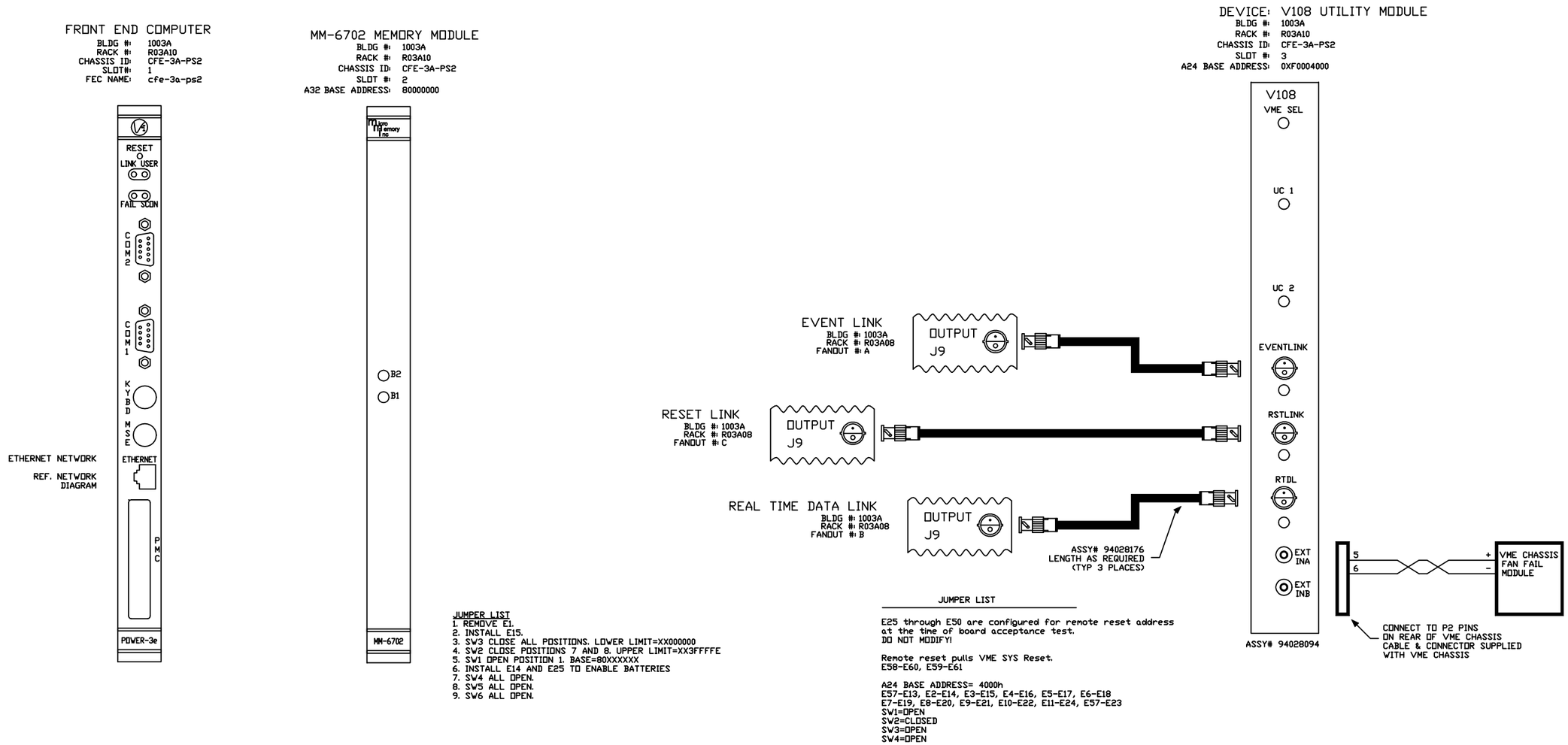


| -3 | -2 | -1 | REF DESIGNATOR | ITEM NO. | DESCRIPTION | MAT'L DWG NO./BNL NO. |
|---|---|---|---|---|---|---|
| QTY REQD | | | | | | |

| | | | |
|---|---|---|---|
| INTERPRET IN GENERAL ACCORDANCE WITH ASME Y14.24M-1989 | Q.A. CATEGORY A-3 | DATE | BROOKHAVEN NATIONAL LABORATORY UPTON, N.Y. 11973 |
| | DRAWN BY Venegas | 8/2/99 | |
| UNLESS OTHERWISE SPECIFIED DIMENSIONS ARE IN INCHES | CHECKED BY | | RHIC CONTROLS WIRING DIAGRAM |
| DECIMAL TOLERANCES .X ±.030 .XX ±.015 .XXX ±.005 ANGULAR TOLERANCE ± .5° | DESIGN APPROVAL | | ALCOVE 1003A, VME CHASSIS CFE-3A-PS2 |
| | ENGINEER APPROVAL R. MICHNOFF | 10/21/97 | CPU/ MEMORY /V108 UTIL MODULE |
| | SUPVR. APPROVAL | | SIZE D — 94028336 — REV. A |
| NA FINISH — BREAK SHARP EDGES MAX. XX MIN. XX | NEXT ASSEMBLY | | DRAWING NUMBER |
| OUTSTANDING ECN | | | MATERIAL: ——— SCALE: NA WEIGHT: – SHEET 28 |

*AUTOCAD

| REV. | ZONE | ECN NO. | DATE | BY | CKR | APP. |
|---|---|---|---|---|---|---|

CONTROLS- 7/11/01 10:37 AM 8336_29.dwg

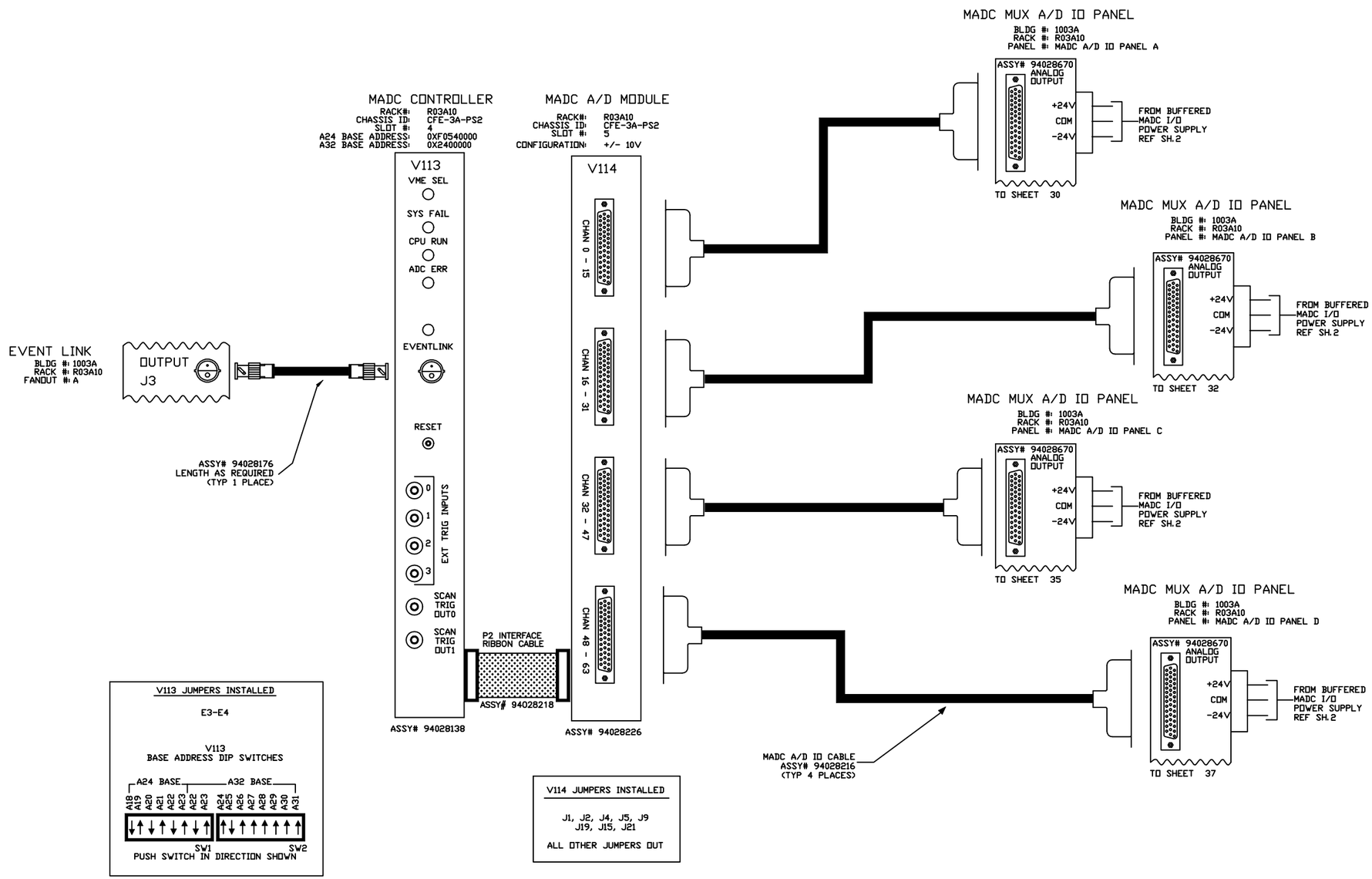


**V113 JUMPERS INSTALLED**

E3-E4

V113
BASE ADDRESS DIP SWITCHES




PUSH SWITCH IN DIRECTION SHOWN

**V114 JUMPERS INSTALLED**

J1, J2, J4, J5, J9
J19, J15, J21

ALL OTHER JUMPERS OUT

| -3 | -2 | -1 | REF DESIGNATOR | ITEM NO. | DESCRIPTION | MAT'L DWG NO./BHL NO. |
|---|---|---|---|---|---|---|
| QTY REQD | | | | | | |

INTERPRET IN GENERAL ACCORDANCE WITH ASME Y14.24M-1989

UNLESS OTHERWISE SPECIFIED DIMENSIONS ARE IN INCHES

DECIMAL TOLERANCES
.X ±.030
.XX ±.015
.XXX ±.005
ANGULAR TOLERANCE
± .5°

FINISH: NA

BREAK SHARP EDGES
MAX. XX MIN. XX

OUTSTANDING ECN

| | | |
|---|---|---|
| Q.A. CATEGORY A-3 | | DATE |
| DRAWN BY | Phil Pape | 10/21/97 |
| CHECKED BY | | |
| DESIGN APPROVAL | | |
| ENGINEER APPROVAL | R. MICHNOFF | 10/21/97 |
| SUPVR. APPROVAL | | |

NEXT ASSEMBLY

BROOKHAVEN NATIONAL LABORATORY
UPTON, N.Y. 11973

RHIC CONTROLS WIRING DIAGRAM

ALCOVE 1003A, VME CHASSIS CFE-3A-PS2

MADC SYSTEM

SIZE D — DRAWING NUMBER 94028336 — REV. A

MATERIAL: ——— SCALE: NA WEIGHT: – SHEET 29 OF 52

*AUTOCAD

| REV. | ZONE | ECN NO. | DATE | BY | CKR | APP. |
|---|---|---|---|---|---|---|

CONTROLS- 6/13/03 9:51 AM 8336_30.dwg

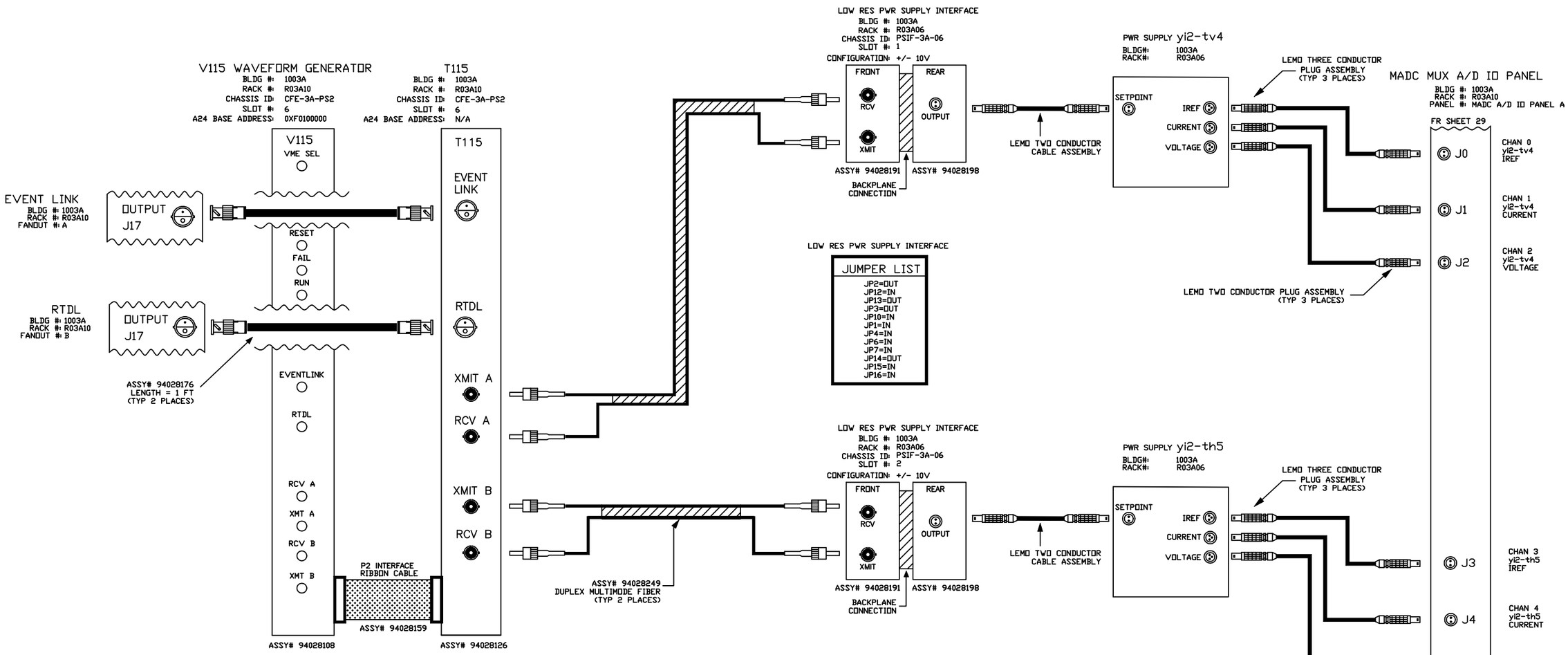


| V115 JUMPER LIST |
|---|
| JP3=IN<br>JP4=IN<br>JP1=OUT<br>JP2=OUT |
| A24 BASE ADDRESS<br>JB1-A23=IN<br>JB1-A22=IN<br>JB1-A21=IN<br>JB1-A20=OUT<br>JB1-A19=IN<br>JB1-A18=IN |

| -3 | -2 | -1 | REF DESIGNATOR | ITEM NO. | DESCRIPTION | MAT'L DWG NO./INL NO. |
|---|---|---|---|---|---|---|
| QTY REQD | | | | | | |

| | | | |
|---|---|---|---|
| INTERPRET IN GENERAL ACCORDANCE WITH ASME Y14.24M-1989 | Q.A. CATEGORY A-3 | DATE | BROOKHAVEN NATIONAL LABORATORY<br>ASSOCIATED UNIVERSITIES, INC.<br>UPTON, N.Y. 11973 |
| | DRAWN BY Phil Pape | 10/21/97 | |
| UNLESS OTHERWISE SPECIFIED DIMENSIONS ARE IN INCHES | CHECKED BY | | RHIC CONTROLS WIRING DIAGRAM |
| DECIMAL TOLERANCES .X ±.030 .XX ±.015 .XXX ±.005 ANGULAR TOLERANCE ± .5° | DESIGN APPROVAL | | ALCOVE 1003A, CFE-3A-PS2 |
| | ENGINEER APPROVAL R. MICHNOFF | 10/21/97 | POWER SUPPLY yi2-tv4/yi2-th5 |
| | SUPVR. APPROVAL | | SIZE D / DRAWING NUMBER 94028336 / REV. A |
| NA FINISH / BREAK SHARP EDGES MAX. XX MIN. XX | NEXT ASSEMBLY | | MATERIAL: —— SCALE: NA WEIGHT: – SHEET 30 |
| OUTSTANDING ECN | | | |

1 *AUTOCAD

| REV. | ZONE | ECN NO. | DATE | BY | CKR | APP. |
|---|---|---|---|---|---|---|

CONTROLS- 6/13/03 9:52 AM 8336_31.dwg

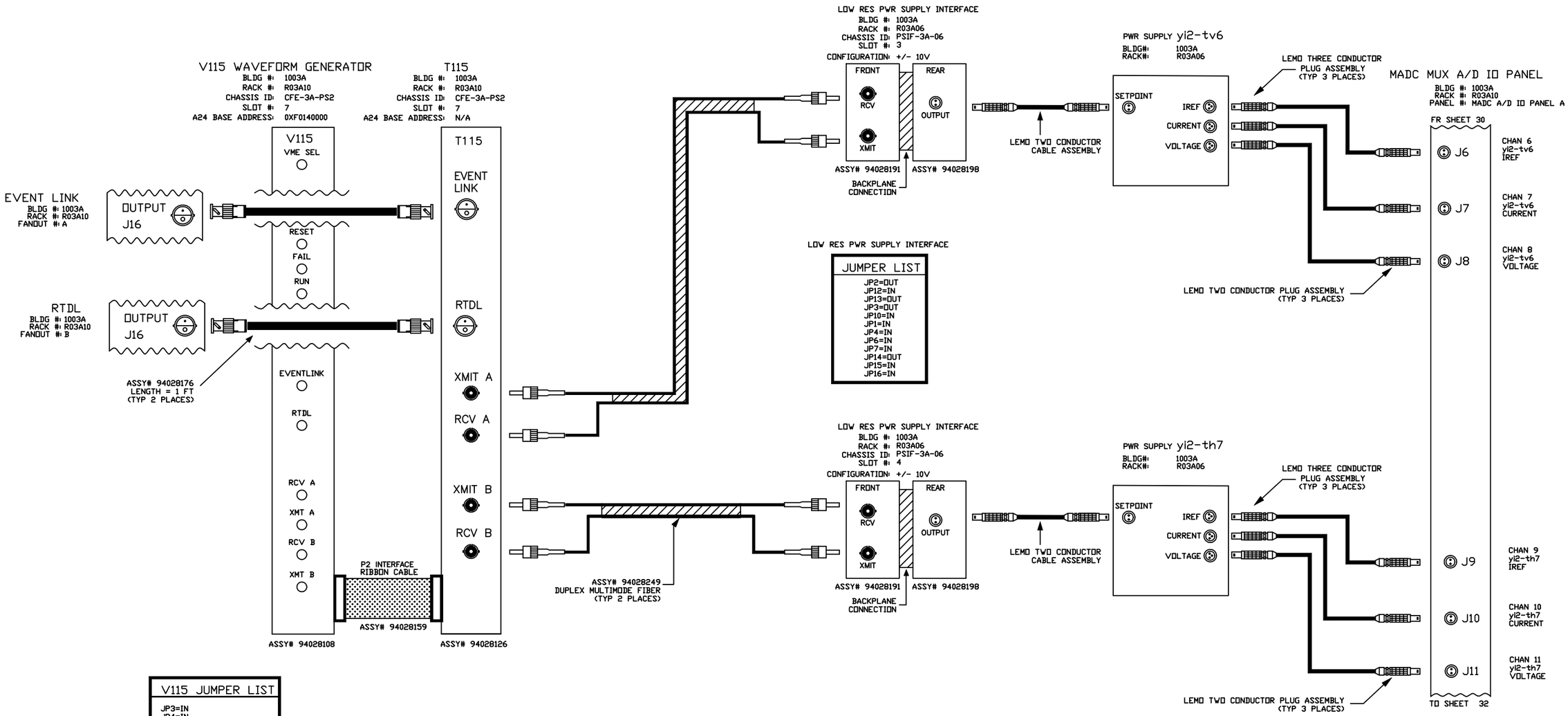


| V115 JUMPER LIST |
|---|
| JP3=IN<br>JP4=IN<br>JP1=OUT<br>JP2=OUT |
| A24 BASE ADDRESS<br>JB1-A23=IN<br>JB1-A22=IN<br>JB1-A21=IN<br>JB1-A20=OUT<br>JB1-A19=IN<br>JB1-A18=OUT |

| -3 | -2 | -1 | REF DESIGNATOR | ITEM NO. | DESCRIPTION | MAT'L DWG NO./INL NO. |
|---|---|---|---|---|---|---|
| QTY REQD | | | | | | |

INTERPRET IN GENERAL ACCORDANCE WITH ASME Y14.24M-1989

UNLESS OTHERWISE SPECIFIED DIMENSIONS ARE IN INCHES

DECIMAL TOLERANCES
.X ±.030
.XX ±.015
.XXX ±.005
ANGULAR TOLERANCE
± .5°

NA FINISH

BREAK SHARP EDGES
MAX. XX MIN. XX

OUTSTANDING ECN

Q.A. CATEGORY A-3 DATE

| | | |
|---|---|---|
| DRAWN BY | Phil Pape | 10/21/97 |
| CHECKED BY | | |
| DESIGN APPROVAL | | |
| ENGINEER APPROVAL | R. MICHNOFF | 10/21/97 |
| SUPVR. APPROVAL | | |

NEXT ASSEMBLY

BROOKHAVEN NATIONAL LABORATORY
ASSOCIATED UNIVERSITIES, INC.
UPTON, N.Y. 11973

RHIC CONTROLS WIRING DIAGRAM

ALCOVE 1003A, CFE-3A-PS2

POWER SUPPLY yi2-tv6/yi2-th7

SIZE D

DRAWING NUMBER 94028336

REV. A

MATERIAL: ——— SCALE: NA WEIGHT: – SHEET 31

*AUTOCAD

CONTROLS- 6/13/03 9:55 AM 8336_32.dwg

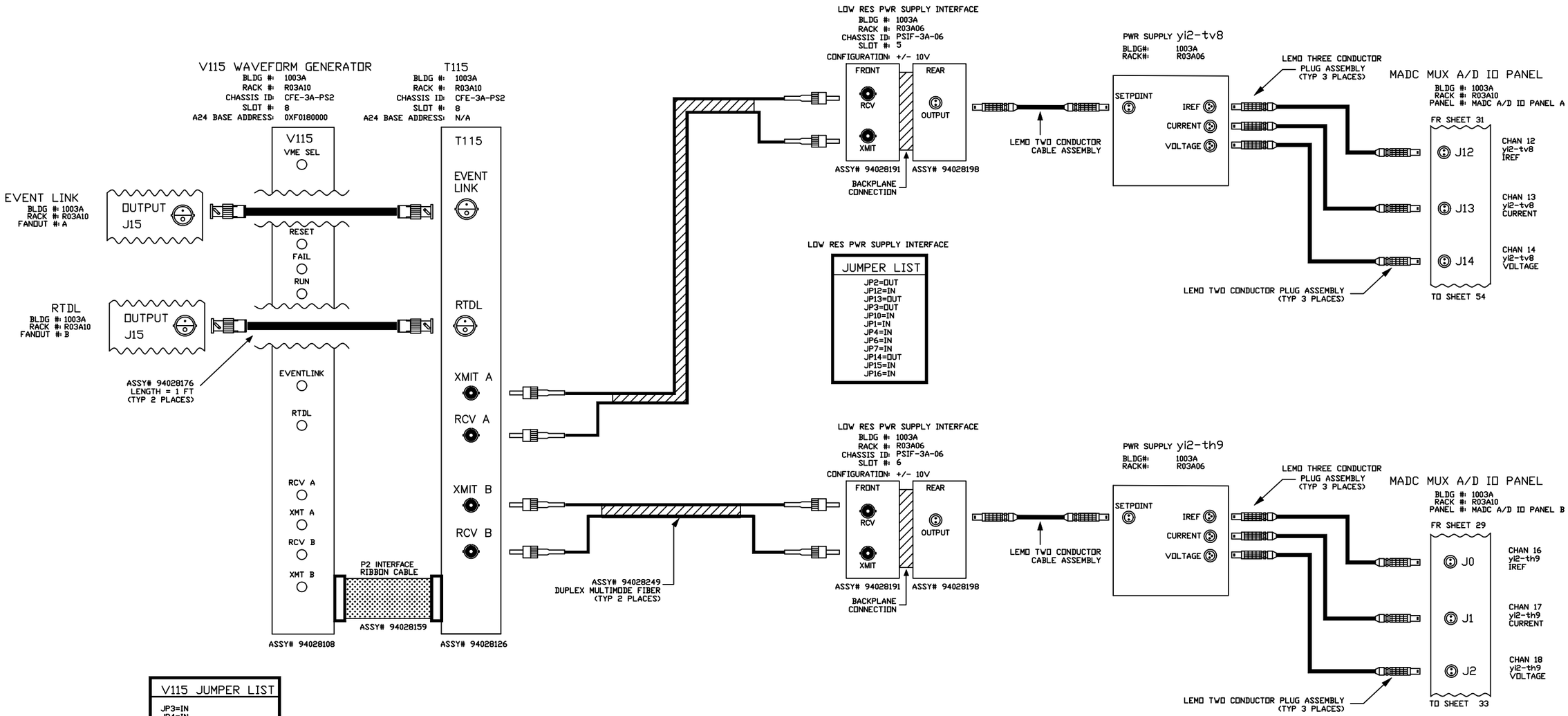


| V115 JUMPER LIST |
|---|
| JP3=IN<br>JP4=IN<br>JP1=OUT<br>JP2=OUT |
| A24 BASE ADDRESS<br>JB1-A23=IN<br>JB1-A22=IN<br>JB1-A21=IN<br>JB1-A20=OUT<br>JB1-A19=OUT<br>JB1-A18=IN |

| REV. | ZONE | ECN NO. | DATE | BY | CKR | APP. |
|---|---|---|---|---|---|---|

| -3 | -2 | -1 | REF DESIGNATOR | ITEM NO. | DESCRIPTION | MAT'L DWG NO./INL NO. |
|---|---|---|---|---|---|---|
| QTY REQD | | | | | | |

INTERPRET IN GENERAL ACCORDANCE WITH ASME Y14.24M-1989

UNLESS OTHERWISE SPECIFIED DIMENSIONS ARE IN INCHES

DECIMAL TOLERANCES
.X ±.030
.XX ±.015
.XXX ±.005
ANGULAR TOLERANCE
± .5°

NA FINISH

BREAK SHARP EDGES
MAX. XX MIN. XX

OUTSTANDING ECN

| | | |
|---|---|---|
| Q.A. CATEGORY A-3 | | DATE |
| DRAWN BY | Phil Pape | 10/21/97 |
| CHECKED BY | | |
| DESIGN APPROVAL | | |
| ENGINEER APPROVAL | R. MICHNOFF | 10/21/97 |
| SUPVR. APPROVAL | | |

NEXT ASSEMBLY

BROOKHAVEN NATIONAL LABORATORY
ASSOCIATED UNIVERSITIES, INC.
UPTON, N.Y. 11973

RHIC CONTROLS WIRING DIAGRAM

ALCOVE 1003A, CFE-3A-PS2

POWER SUPPLY yi2-tv8/yi2-th9

SIZE D

DRAWING NUMBER 94028336

REV. A

MATERIAL: ——— SCALE: NA WEIGHT: – SHEET 32

*AUTOCAD

| REV. | ZONE | ECN NO. | DATE | BY | CKR | APP. |
|---|---|---|---|---|---|---|

CONTROLS- 6/13/03 9:58 AM 8336_33.dwg

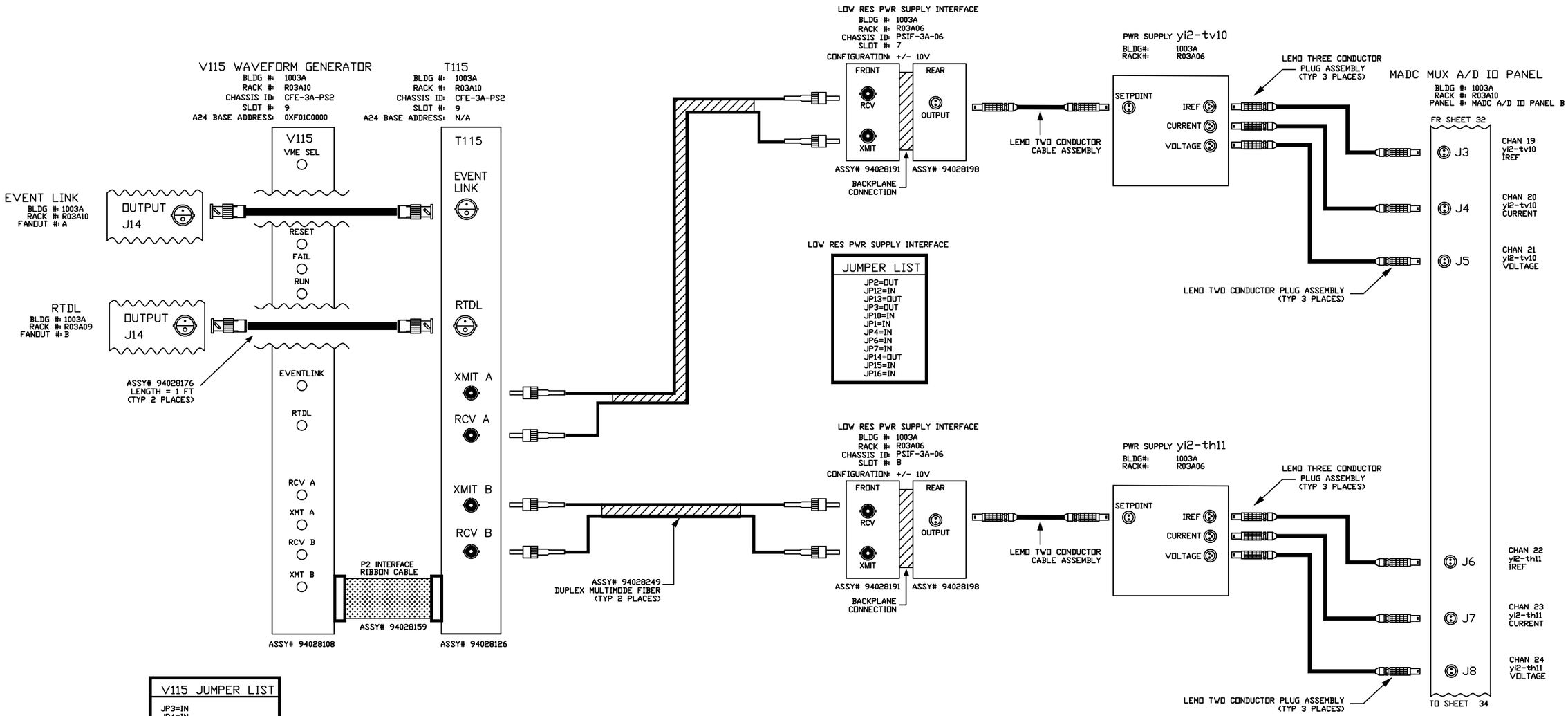


| V115 JUMPER LIST |
|---|
| JP3=IN<br>JP4=IN<br>JP1=OUT<br>JP2=OUT |
| A24 BASE ADDRESS<br>JB1-A23=IN<br>JB1-A22=IN<br>JB1-A21=IN<br>JB1-A20=OUT<br>JB1-A19=OUT<br>JB1-A18=OUT |

| -3 | -2 | -1 | REF DESIGNATOR | ITEM NO. | DESCRIPTION | MAT'L DWG NO./INL NO. |
|---|---|---|---|---|---|---|
| QTY REQD | | | | | | |

| | | | |
|---|---|---|---|
| INTERPRET IN GENERAL ACCORDANCE WITH ASME Y14.24M-1989 | Q.A. CATEGORY A-3 | DATE | BROOKHAVEN NATIONAL LABORATORY<br>ASSOCIATED UNIVERSITIES, INC.<br>UPTON, N.Y. 11973 |
| | DRAWN BY Phil Pape | 10/21/97 | |
| UNLESS OTHERWISE SPECIFIED DIMENSIONS ARE IN INCHES | CHECKED BY | | RHIC CONTROLS WIRING DIAGRAM |
| DECIMAL TOLERANCES .X ±.030 .XX ±.015 .XXX ±.005 ANGULAR TOLERANCE ± .5° | DESIGN APPROVAL | | ALCOVE 1003A, CFE-3A-PS2 |
| | ENGINEER APPROVAL R. MICHNOFF | 10/21/97 | POWER SUPPLY yi2-tv10/yi2-th11 |
| | SUPVR. APPROVAL | | SIZE D / 94028336 / REV. A |
| NA FINISH / BREAK SHARP EDGES MAX. XX MIN. XX | NEXT ASSEMBLY | | DRAWING NUMBER |
| OUTSTANDING ECN | | | MATERIAL: ——— SCALE: NA WEIGHT: – SHEET 33 |

*AUTOCAD

CONTROLS- 6/13/03 10:02 AM 8336_34.dwg

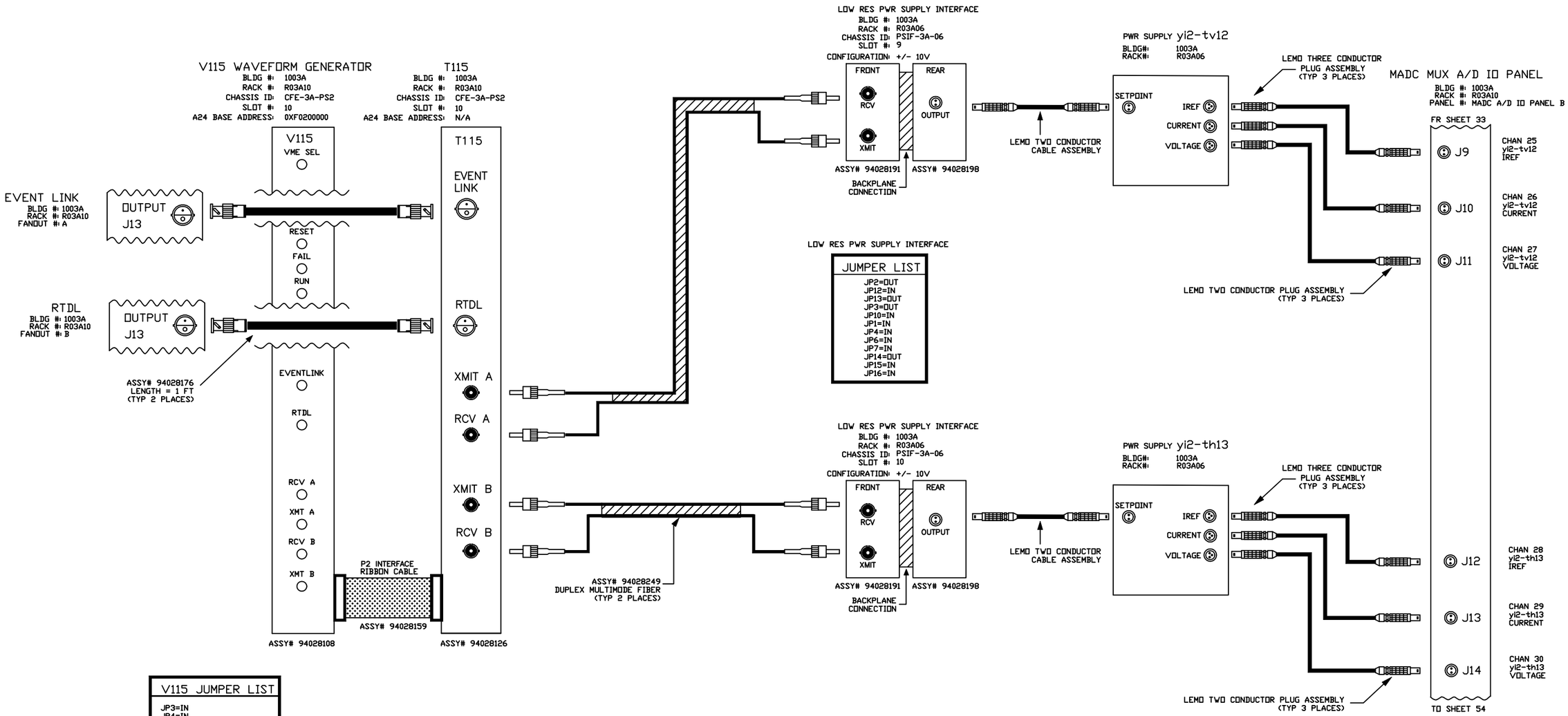


| V115 JUMPER LIST |
|---|
| JP3=IN<br>JP4=IN<br>JP1=OUT<br>JP2=OUT |
| A24 BASE ADDRESS<br>JB1-A23=IN<br>JB1-A22=IN<br>JB1-A21=OUT<br>JB1-A20=IN<br>JB1-A19=IN<br>JB1-A18=IN |

| | | | | | |
|---|---|---|---|---|---|
| -3 -2 -1 QTY REQD | REF DESIGNATOR | ITEM NO. | DESCRIPTION | | MAT'L DWG NO.,BNL NO. |
| INTERPRET IN GENERAL ACCORDANCE WITH ASME Y14.24M-1989 | | Q.A. CATEGORY A-3 | DATE | BROOKHAVEN NATIONAL LABORATORY ASSOCIATED UNIVERSITIES, INC. UPTON, N.Y. 11973 | |
| | | DRAWN BY Phil Pape | 10/21/97 | | |
| UNLESS OTHERWISE SPECIFIED DIMENSIONS ARE IN INCHES | | CHECKED BY | | RHIC CONTROLS WIRING DIAGRAM | |
| DECIMAL TOLERANCES .X ±.030 .XX ±.015 .XXX ±.005 ANGULAR TOLERANCE ± .5° | | DESIGN APPROVAL | | ALCOVE 1003A, CFE-3A-PS2 | |
| | | ENGINEER APPROVAL R. MICHNOFF | 10/21/97 | POWER SUPPLY yi2-tv12/yi2-th13 | |
| | | SUPVR. APPROVAL | | SIZE D | REV. A |
| OUTSTANDING ECN | NA FINISH | BREAK SHARP EDGES MAX. XX MIN. XX | NEXT ASSEMBLY | DRAWING NUMBER 94028336 | |
| | | | | MATERIAL: ——— SCALE: NA WEIGHT: – SHEET 34 | |

*AUTOCAD

| REV. | ZONE | ECN NO. | DATE | BY | CKR | APP. |
|---|---|---|---|---|---|---|

CONTROLS- 6/13/03 10:23 AM 8336_35.dwg

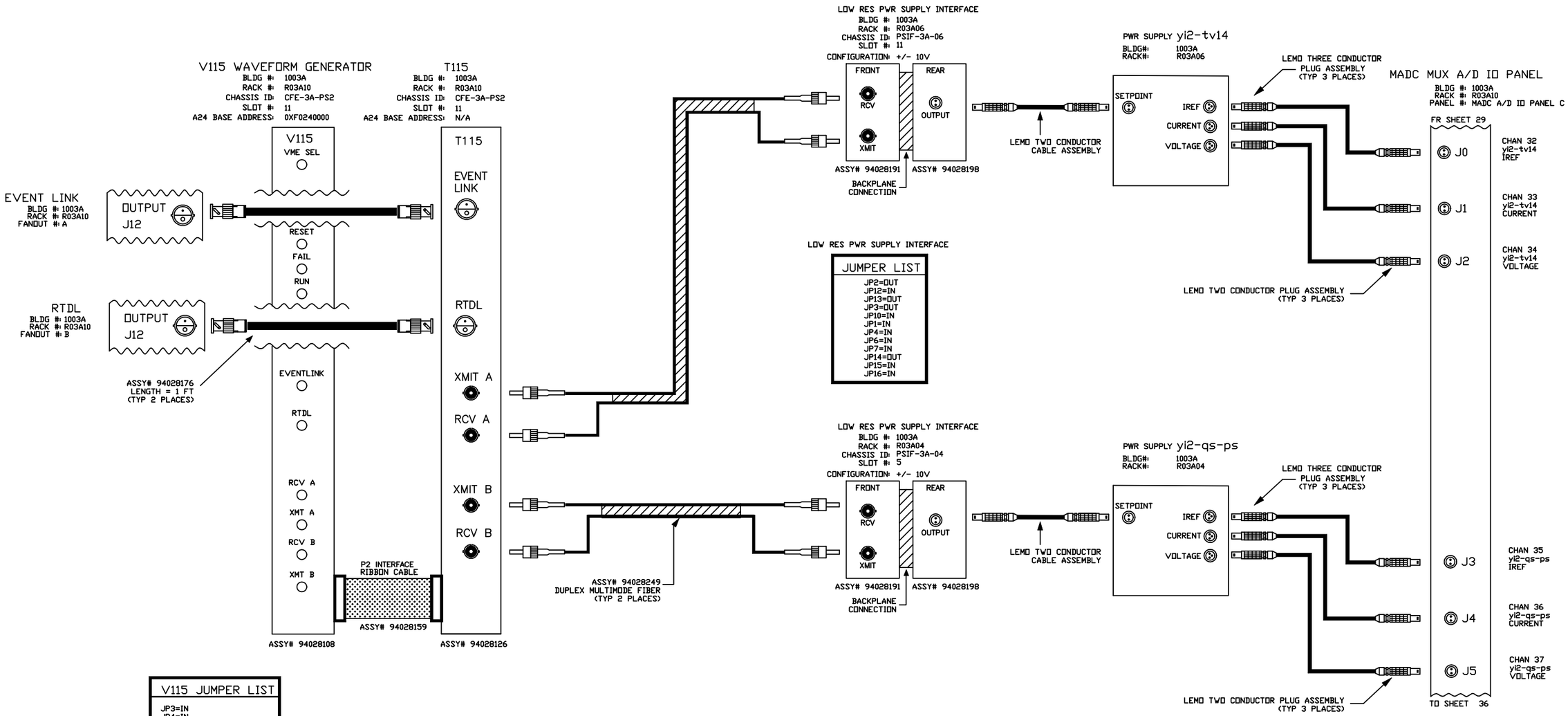


| V115 JUMPER LIST |
|---|
| JP3=IN<br>JP4=IN<br>JP1=OUT<br>JP2=OUT |
| A24 BASE ADDRESS<br>JB1-A23=IN<br>JB1-A22=IN<br>JB1-A21=OUT<br>JB1-A20=IN<br>JB1-A19=IN<br>JB1-A18=OUT |

| -3 | -2 | -1 | REF DESIGNATOR | ITEM NO. | DESCRIPTION | MAT'L DWG NO./INL NO. |
|---|---|---|---|---|---|---|
| QTY REQD | | | | | | |

INTERPRET IN GENERAL ACCORDANCE WITH ASME Y14.24M-1989

UNLESS OTHERWISE SPECIFIED DIMENSIONS ARE IN INCHES

DECIMAL TOLERANCES
.X ±.030
.XX ±.015
.XXX ±.005
ANGULAR TOLERANCE
± .5°

NA FINISH

BREAK SHARP EDGES
MAX. XX MIN. XX

OUTSTANDING ECN

| | | |
|---|---|---|
| Q.A. CATEGORY A-3 | | DATE |
| DRAWN BY | Phil Pape | 10/21/97 |
| CHECKED BY | | |
| DESIGN APPROVAL | | |
| ENGINEER APPROVAL | R. MICHNOFF | 10/21/97 |
| SUPVR. APPROVAL | | |

NEXT ASSEMBLY

BROOKHAVEN NATIONAL LABORATORY
ASSOCIATED UNIVERSITIES, INC.
UPTON, N.Y. 11973

RHIC CONTROLS WIRING DIAGRAM

ALCOVE 1003A, CFE-3A-PS2

PWR SUPPLY yi2-tv14/yi2-qs-ps

SIZE D

DRAWING NUMBER 94028336

REV. A

MATERIAL: ——— SCALE: NA WEIGHT: – SHEET 35

*AUTOCAD

| REV. | ZONE | ECN NO. | DATE | BY | CKR | APP. |
|---|---|---|---|---|---|---|

CONTROLS- 6/13/03 10:24 AM 8336_36.dwg

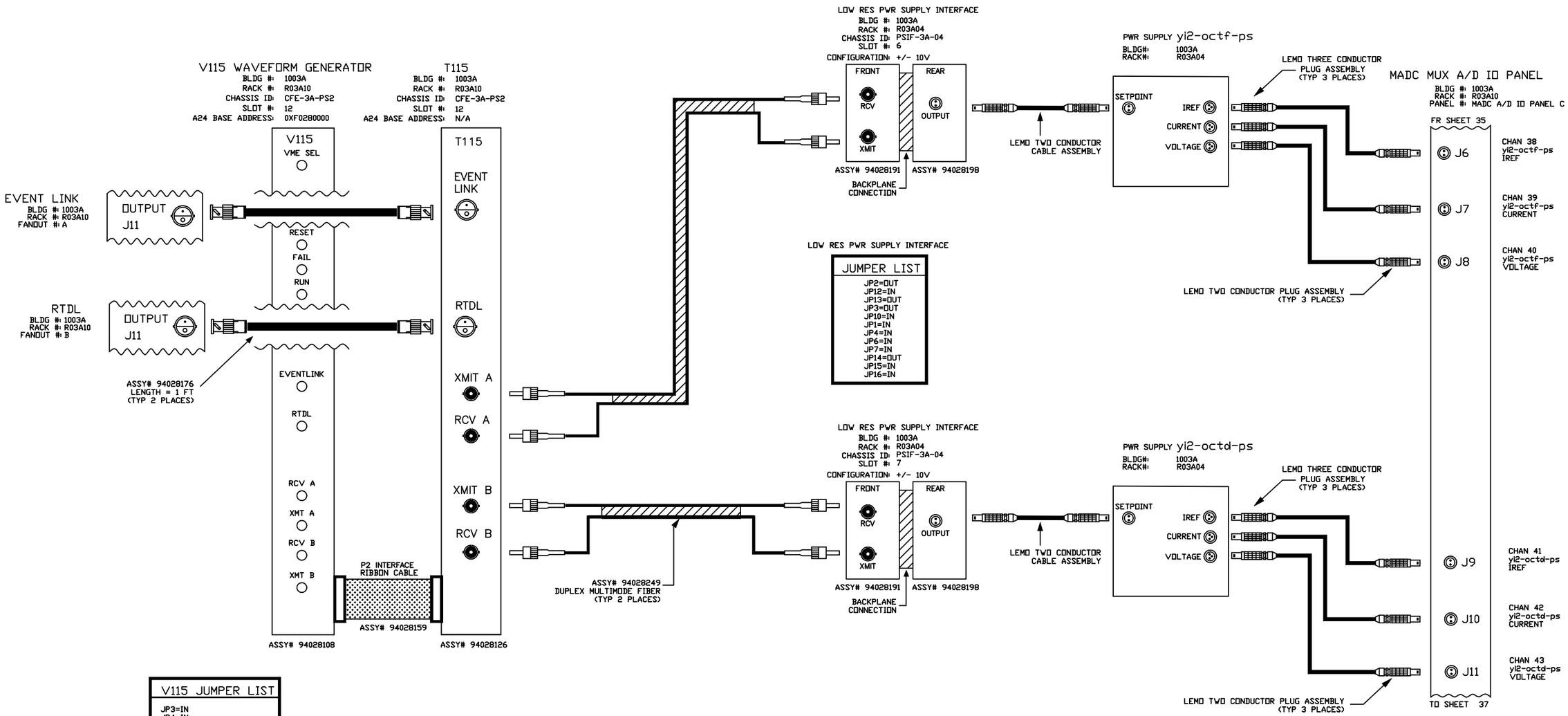


| V115 JUMPER LIST |
|---|
| JP3=IN<br>JP4=IN<br>JP1=OUT<br>JP2=OUT |
| A24 BASE ADDRESS<br>JB1-A23=IN<br>JB1-A22=IN<br>JB1-A21=OUT<br>JB1-A20=IN<br>JB1-A19=OUT<br>JB1-A18=IN |

| -3 | -2 | -1 | REF DESIGNATOR | ITEM NO. | DESCRIPTION | MAT'L DWG NO./INL NO. |
|---|---|---|---|---|---|---|
| QTY REQD | | | | | | |

INTERPRET IN GENERAL ACCORDANCE WITH ASME Y14.24M-1989

UNLESS OTHERWISE SPECIFIED DIMENSIONS ARE IN INCHES

DECIMAL TOLERANCES
.X ±.030
.XX ±.015
.XXX ±.005
ANGULAR TOLERANCE
± .5°

NA FINISH

BREAK SHARP EDGES
MAX. XX MIN. XX

OUTSTANDING ECN

Q.A. CATEGORY A-3

| | | DATE |
|---|---|---|
| DRAWN BY | Phil Pape | 10/21/97 |
| CHECKED BY | | |
| DESIGN APPROVAL | | |
| ENGINEER APPROVAL | R. MICHNOFF | 10/21/97 |
| SUPVR. APPROVAL | | |

NEXT ASSEMBLY

BROOKHAVEN NATIONAL LABORATORY
ASSOCIATED UNIVERSITIES, INC.
UPTON, N.Y. 11973

RHIC CONTROLS WIRING DIAGRAM

ALCOVE 1003A, CFE-3A-PS2

PWRSPLY yi2-octf-ps/yi2-octd-ps

SIZE D

DRAWING NUMBER 94028336

REV. A

MATERIAL: ——— SCALE: NA WEIGHT: – SHEET 36

*AUTOCAD

| REV. | ZONE | ECN NO. | DATE | BY | CKR | APP. |
|---|---|---|---|---|---|---|

CONTROLS- 6/13/03 10:28 AM 8336_37.dwg

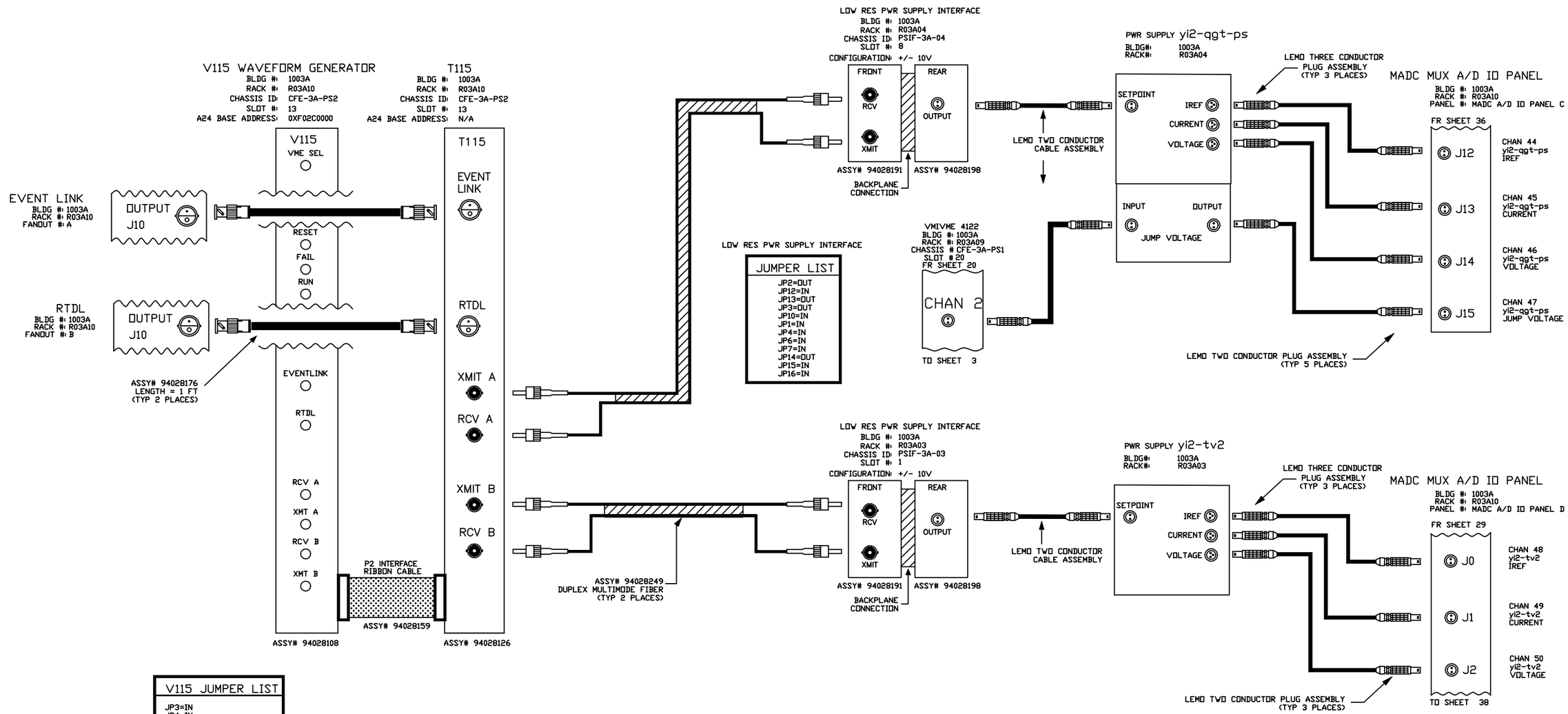


| V115 JUMPER LIST |
|---|
| JP3=IN<br>JP4=IN<br>JP1=OUT<br>JP2=OUT |
| A24 BASE ADDRESS<br>JB1-A23=IN<br>JB1-A22=IN<br>JB1-A21=OUT<br>JB1-A20=IN<br>JB1-A19=OUT<br>JB1-A18=OUT |

| -3 | -2 | -1 | REF DESIGNATOR | ITEM NO. | DESCRIPTION | MAT'L DWG NO./INL NO. |
|---|---|---|---|---|---|---|
| QTY REQD | | | | | | |

INTERPRET IN GENERAL ACCORDANCE WITH ASME Y14.24M-1989

UNLESS OTHERWISE SPECIFIED DIMENSIONS ARE IN INCHES

DECIMAL TOLERANCES
.X ±.030
.XX ±.015
.XXX ±.005
ANGULAR TOLERANCE
± .5°

NA FINISH

BREAK SHARP EDGES
MAX. XX MIN. XX

OUTSTANDING ECN

| | | |
|---|---|---|
| Q.A. CATEGORY A-3 | | DATE |
| DRAWN BY | Phil Pape | 10/21/97 |
| CHECKED BY | | |
| DESIGN APPROVAL | | |
| ENGINEER APPROVAL | R. MICHNOFF | 10/21/97 |
| SUPVR. APPROVAL | | |

NEXT ASSEMBLY

BROOKHAVEN NATIONAL LABORATORY
UPTON, N.Y. 11973

RHIC CONTROLS WIRING DIAGRAM
ALCOVE 1003A, CFE-3A-PS2
PWR SPLY yi2-qgt-ps/yi2-tv2

SIZE D
DRAWING NUMBER 94028336
REV. A

MATERIAL: ——— SCALE: NA WEIGHT: – SHEET 37

*AUTOCAD

CONTROLS- 6/13/03 10:30 AM 8336_38.dwg

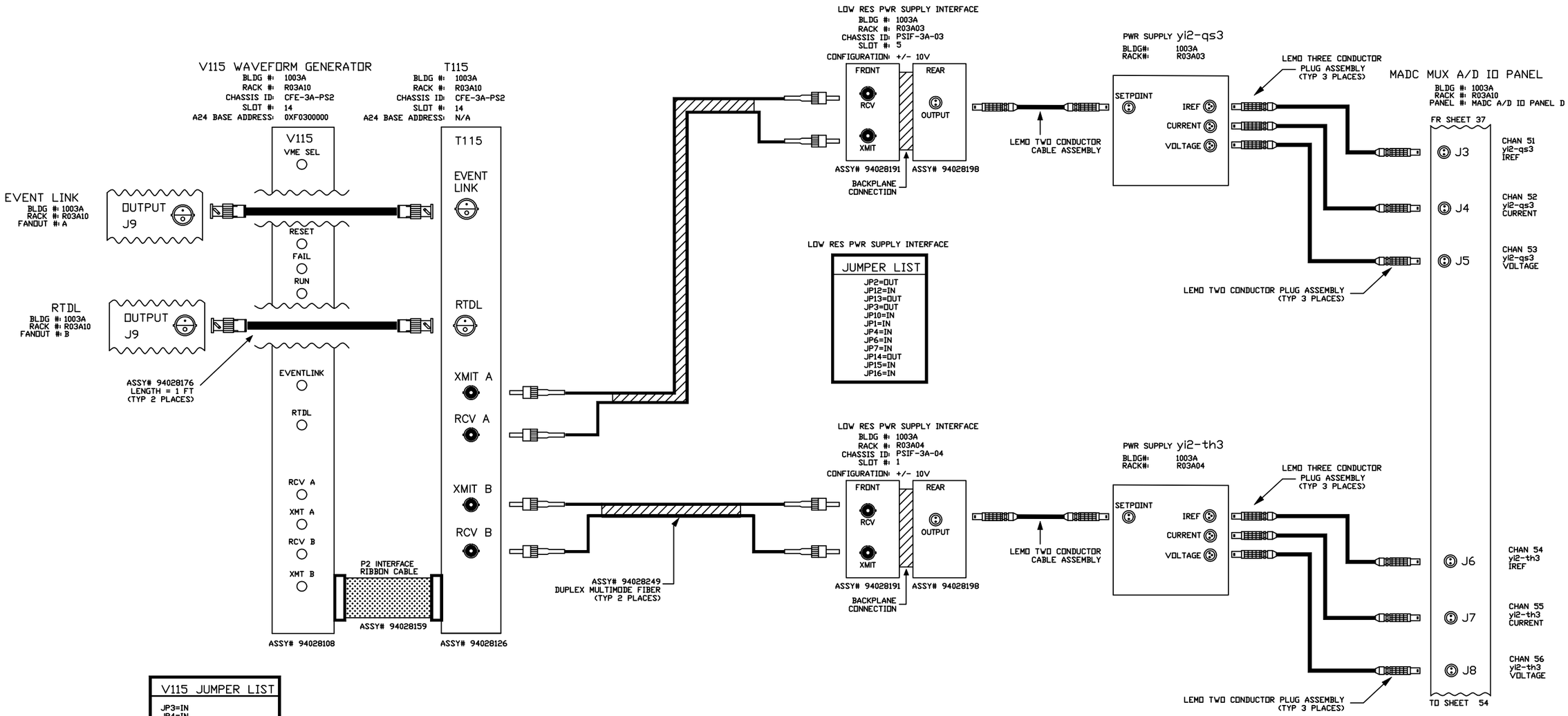


| V115 JUMPER LIST |
|---|
| JP3=IN<br>JP4=IN<br>JP1=OUT<br>JP2=OUT |
| A24 BASE ADDRESS<br>JB1-A23=IN<br>JB1-A22=IN<br>JB1-A21=OUT<br>JB1-A20=OUT<br>JB1-A19=IN<br>JB1-A18=IN |

| | | | |
|---|---|---|---|
| INTERPRET IN GENERAL ACCORDANCE WITH ASME Y14.24M-1989 | Q.A. CATEGORY A-3 | DATE | BROOKHAVEN NATIONAL LABORATORY<br>ASSOCIATED UNIVERSITIES, INC.<br>UPTON, N.Y. 11973 |
| | DRAWN BY Phil Pape | 10/21/97 | |
| UNLESS OTHERWISE SPECIFIED DIMENSIONS ARE IN INCHES | CHECKED BY | | RHIC CONTROLS WIRING DIAGRAM |
| DECIMAL TOLERANCES .X ±.030 .XX ±.015 .XXX ±.005 ANGULAR TOLERANCE ± .5° | DESIGN APPROVAL | | ALCOVE 1003A, CFE-3A-PS2 |
| | ENGINEER APPROVAL R. MICHNOFF | 10/21/97 | POWER SUPPLY yi2-qs3/yi2-th3 |
| | SUPVR. APPROVAL | | SIZE D — DRAWING NUMBER 94028336 — REV. A |
| NA FINISH — BREAK SHARP EDGES MAX. XX MIN. XX | NEXT ASSEMBLY | | MATERIAL: — SCALE: NA WEIGHT: – SHEET 38 |

-3 -2 -1 QTY REQD | REF DESIGNATOR | ITEM NO. | DESCRIPTION | MAT'L DWG NO./INL NO.

OUTSTANDING ECN

REV. | ZONE | ECN NO. | DATE | BY | CKR | APP.

1 *AUTOCAD

| REV. | ZONE | ECN NO. | DATE | BY | CKR | APP. |
|---|---|---|---|---|---|---|

CONTROLS- 7/11/01 10:39 AM 8336_47.dwg

| -3 | -2 | -1 | REF DESIGNATOR | ITEM NO. | DESCRIPTION | MAT'L. DWG NO.,BNL NO. |
|---|---|---|---|---|---|---|
| QTY REQD | | | | | | |

INTERPRET IN GENERAL ACCORDANCE WITH ASME Y14.24M-1989

UNLESS OTHERWISE SPECIFIED DIMENSIONS ARE IN INCHES

DECIMAL TOLERANCES
.X ±.030
.XX ±.015
.XXX ±.005
ANGULAR TOLERANCE
± .5°

NA FINISH

BREAK SHARP EDGES
MAX. XX MIN. XX

OUTSTANDING ECN

| | | |
|---|---|---|
| Q.A. CATEGORY A-3 | | DATE |
| DRAWN BY | Phil Pape | 10/21/97 |
| CHECKED BY | | |
| DESIGN APPROVAL | | |
| ENGINEER APPROVAL | R. MICHNOFF | 10/21/97 |
| SUPVR. APPROVAL | | |
| NEXT ASSEMBLY | | |

**BROOKHAVEN NATIONAL LABORATORY**
**UPTON, N.Y. 11973**

RHIC CONTROLS WIRING DIAGRAM

ALCOVE 1003A CHASSIS CFE-3A-PS2

SIZE D

94028336

DRAWING NUMBER

REV. A

MATERIAL: ———— SCALE: NA WEIGHT: – SHEET 47

*AUTOCAD

| REV. | ZONE | ECN NO. | DATE | BY | CKR | APP. |
|---|---|---|---|---|---|---|

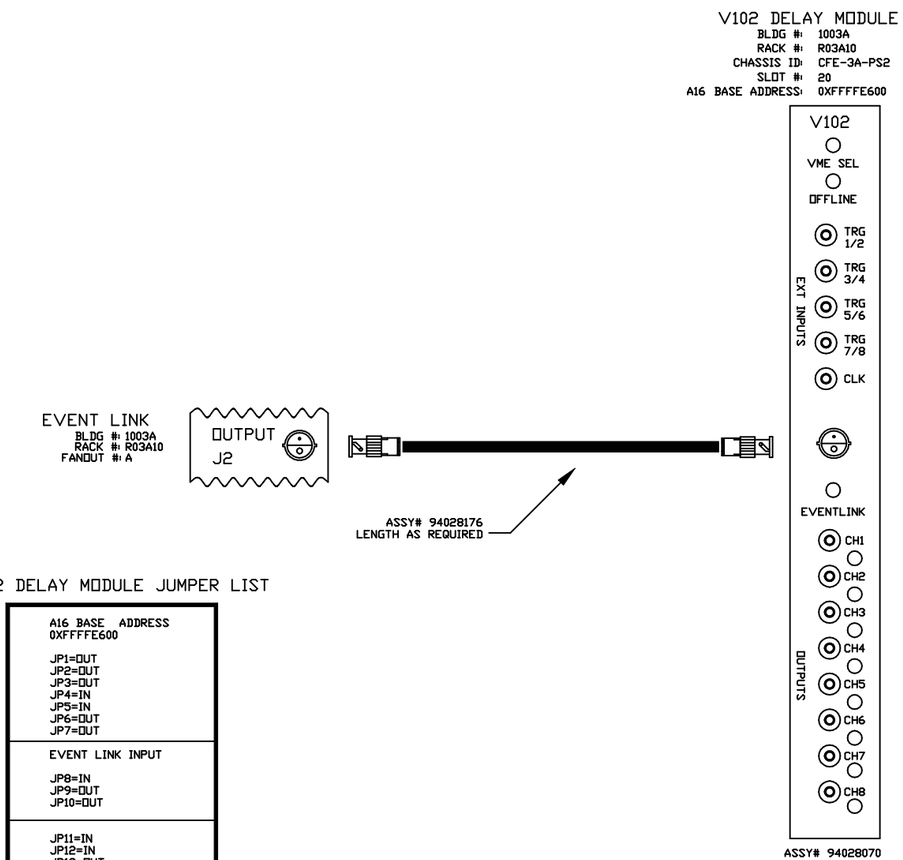


V102 DELAY MODULE JUMPER LIST

| |
|---|
| A16 BASE ADDRESS<br>0XFFFFE600<br><br>JP1=OUT<br>JP2=OUT<br>JP3=OUT<br>JP4=IN<br>JP5=IN<br>JP6=OUT<br>JP7=OUT |
| EVENT LINK INPUT<br><br>JP8=IN<br>JP9=OUT<br>JP10=OUT |
| JP11=IN<br>JP12=IN<br>JP13=OUT<br>JP14=IN |

| -3 | -2 | -1 | REF DESIGNATOR | ITEM NO. | DESCRIPTION | MAT'L DWG NO.,SPL NO. |
|---|---|---|---|---|---|---|
| QTY REQD | | | | | | |

INTERPRET IN GENERAL ACCORDANCE WITH ASME Y14.24M-1989

UNLESS OTHERWISE SPECIFIED DIMENSIONS ARE IN INCHES

DECIMAL TOLERANCES
.X ±.030
.XX ±.015
.XXX ±.005
ANGULAR TOLERANCE
± .5°

FINISH: NA

BREAK SHARP EDGES
MAX. XX MIN. XX

OUTSTANDING ECN

| | | |
|---|---|---|
| Q.A. CATEGORY A-3 | DATE | |
| DRAWN BY | Phil Pape | 10/21/97 |
| CHECKED BY | | |
| DESIGN APPROVAL | | |
| ENGINEER APPROVAL | R. MICHNOFF | 10/21/97 |
| SUPVR. APPROVAL | | |
| NEXT ASSEMBLY | | |

BROOKHAVEN NATIONAL LABORATORY
ASSOCIATED UNIVERSITIES, INC.
UPTON, N.Y. 11973

RHIC CONTROLS WIRING DIAGRAM

ALCOVE 1003A CHASSIS CFE-3A-PS2

V102 DELAY MODULE

SIZE: D

DRAWING NUMBER: 94028336

REV.: A

MATERIAL: ———— SCALE: NA WEIGHT: – SHEET 48 OF 52

1 *AUTOCAD

| REV. | ZONE | ECN NO. | DATE | BY | CKR | APP. |
|---|---|---|---|---|---|---|

Controls 8/4/99 8:55 AM 8336_51.dwg

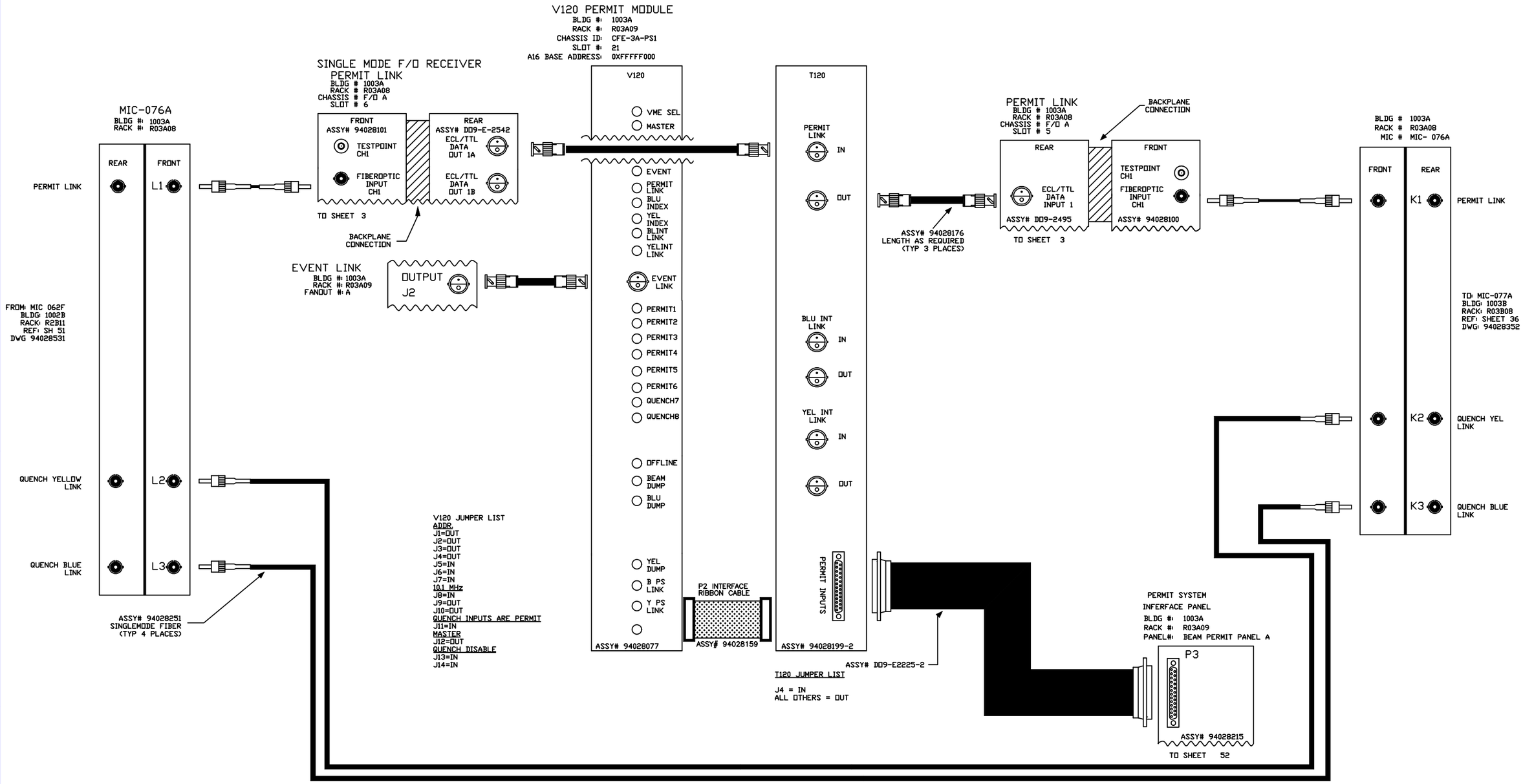


| -3 | -2 | -1 | REF DESIGNATOR | ITEM NO. | DESCRIPTION | MAT'L DWG NO./INL NO. |
|---|---|---|---|---|---|---|
| QTY REQD | | | | | | |

INTERPRET IN GENERAL ACCORDANCE WITH ASME Y14.24M-1989

UNLESS OTHERWISE SPECIFIED DIMENSIONS ARE IN INCHES

DECIMAL TOLERANCES
.X ±.030
.XX ±.015
.XXX ±.005
ANGULAR TOLERANCE
± .5°

NA FINISH

BREAK SHARP EDGES
MAX. XX MIN. XX

OUTSTANDING ECN

| | | |
|---|---|---|
| Q.A. CATEGORY A-3 | | DATE |
| DRAWN BY | Venegas | 8/3/99 |
| CHECKED BY | | |
| DESIGN APPROVAL | | |
| ENGINEER APPROVAL | R. MICHNOFF | 11/4/97 |
| SUPVR. APPROVAL | | |

NEXT ASSEMBLY

BROOKHAVEN NATIONAL LABORATORY
UPTON, N.Y. 11973

RHIC CONTROLS WIRING DIAGRAM
ALCOVE 1003A, CHASSIS CFE-3A-PS1
V120/T120 PERMIT SYSTEM

SIZE D
94028336
DRAWING NUMBER
REV. A

MATERIAL: ——— SCALE: NA WEIGHT: – SHEET 51 OF 52

*AUTOCAD

| REV. | ZONE | ECN NO. | DATE | BY | CKR | APP. |
|---|---|---|---|---|---|---|

CONTROLS- 5/28/03 1:05 PM 8336_52.dwg

PERMIT SYSTEM INTERFACE MODULE

BLDG #: 1003A
RACK #: R03A09
PANEL #: PERMIT I/F PANEL A

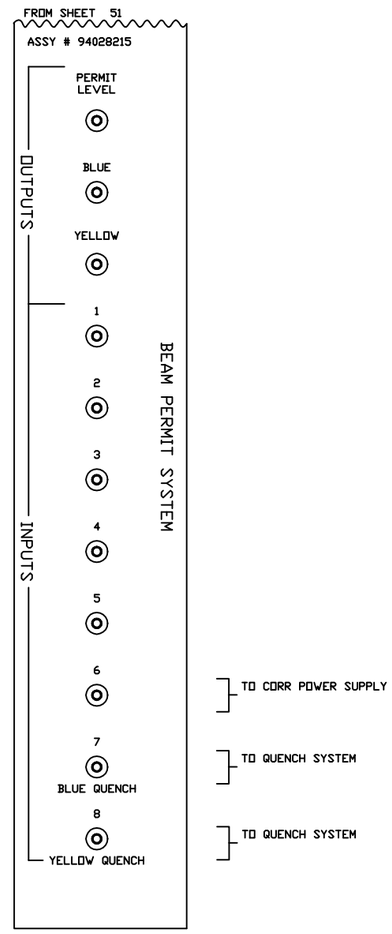


| -3 | -2 | -1 | REF DESIGNATOR | ITEM NO. | DESCRIPTION | MAT'L. DWG NO.,BNL NO. |
|---|---|---|---|---|---|---|
| QTY REQD | | | | | | |

INTERPRET IN GENERAL ACCORDANCE WITH ASME Y14.24M-1989

UNLESS OTHERWISE SPECIFIED DIMENSIONS ARE IN INCHES
DECIMAL TOLERANCES
.X ±.030
.XX ±.015
.XXX ±.005
ANGULAR TOLERANCE
± .5°

OUTSTANDING ECN

NA FINISH

BREAK SHARP EDGES
MAX. XX MIN. XX

| | | | |
|---|---|---|---|
| Q.A. CATEGORY A-3 | | DATE | BROOKHAVEN NATIONAL LABORATORY |
| DRAWN BY | Phil Pape | 7/28/97 | UPTON, N.Y. 11973 |
| CHECKED BY | | | RHIC CONTROLS WIRING DIAGRAM |
| DESIGN APPROVAL | | | ALCOVE 1003A, RACK R03A09 |
| ENGINEER APPROVAL | R. MICHNOFF | 6/28/97 | PERMIT SYSTEM INTERFACE PANEL |
| SUPVR. APPROVAL | | | |
| NEXT ASSEMBLY | | | |

SIZE D | DRAWING NUMBER 94028336 | REV. A

MATERIAL: ——— | SCALE: NA | WEIGHT: – | SHEET 52

*AUTOCAD

| REV. | ZONE | ECN NO. | DATE | BY | CKR | APP. |
|---|---|---|---|---|---|---|

VMIVME 4122 ANALOG OUTPUT MODULE

BLDG #: 1003A
RACK #: R03A09
CHASSIS ID: CFE-3A-PS1
SLOT #: 20
A16 BASE ADDRESS: 0x0200
CONFIGURATION: -10 TO +10 VOLTS

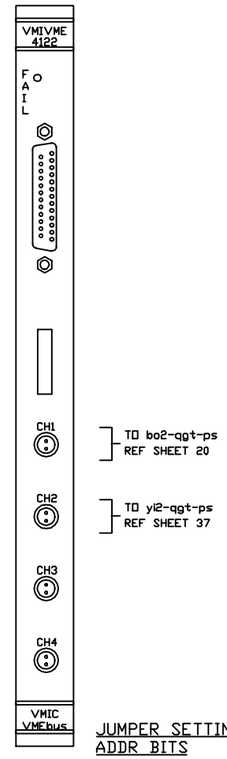


TO bo2-qgt-ps
REF SHEET 20

TO yi2-qgt-ps
REF SHEET 37

JUMPER SETTINGS

| ADDR BITS | -10V TO +10V |
|---|---|
| E11 (A7): IN | E1: 2-3 |
| E12 (A8): IN | E3: 2-3 |
| E13 (A9): OUT | E4: OUT |
| E14 (A10): IN | E5: OUT |
| E15 (A11): IN | E6: 2-3 |
| E16 (A12): IN | E7: 2-3 |
| E17 (A13): IN | E8: 1-2 |
| E18 (A14): IN | E9: OUT |
| E19 (A15): IN | E10: OUT |

NOTE: PIN 1 OF JUMPERS IS DESIGNATED BY A SQUARE PAD ON THE SOLDER SIDE OF THE BOARD

| -3 | -2 | -1 | REF DESIGNATOR | ITEM NO. | DESCRIPTION | MAT'L DWG NO.,SPEC NO. |
|---|---|---|---|---|---|---|
| QTY REQD | | | | | | |

INTERPRET IN GENERAL ACCORDANCE WITH ASME Y14.24M-1989

UNLESS OTHERWISE SPECIFIED DIMENSIONS ARE IN INCHES
DECIMAL TOLERANCES
.X ±.030
.XX ±.015
.XXX ±.005
ANGULAR TOLERANCE
± .5°

NA FINISH
BREAK SHARP EDGES
MAX. XX MIN. XX

OUTSTANDING ECN

| | | |
|---|---|---|
| Q.A. CATEGORY A-3 | | DATE |
| DRAWN BY | Ed Koropsak | 11/29/99 |
| CHECKED BY | | |
| DESIGN APPROVAL | | |
| ENGINEER APPROVAL | R. MICHNOFF | 11/29/99 |
| SUPVR. APPROVAL | | |

NEXT ASSEMBLY

BROOKHAVEN NATIONAL LABORATORY
UPTON, N.Y. 11973

C-A CONTROLS WIRING DIAGRAM
ALCOVE 1003A, RACK R03A09
GAMMA-T ANALOG SIGNAL

SIZE D
94028336
DRAWING NUMBER
REV. A

MATERIAL: ——— SCALE: NA WEIGHT: – SHEET 53 OF 53

1 *AUTOCAD

| REV. | ZONE | ECN NO. | DATE | BY | CKR | APP. |
|---|---|---|---|---|---|---|

CONTROLS- 6/13/03 10:04 AM 8336_54.dwg

MADC MUX A/D IO PANEL
BLDG #: 1003A
RACK #: R03A09
PANEL #: MADC A/D IO PANEL B

FR SHEET 17

J15 — CHAN 31 SPARE

MADC MUX A/D IO PANEL
BLDG #: 1003A
RACK #: R03A09
PANEL #: MADC A/D IO PANEL D

FR SHEET 21

J9 — CHAN 57 SPARE
J10 — CHAN 58 SPARE
J11 — CHAN 59 SPARE
J12 — CHAN 60 SPARE
J13 — CHAN 61 SPARE
J14 — CHAN 62 SPARE

TO SHEET 28

MADC MUX A/D IO PANEL
BLDG #: 1003A
RACK #: R03A10
PANEL #: MADC A/D IO PANEL A

FR SHEET 32

J15 — CHAN 15 SPARE

MADC MUX A/D IO PANEL
BLDG #: 1003A
RACK #: R03A10
PANEL #: MADC A/D IO PANEL B

FR SHEET 34

J15 — CHAN 31 SPARE

MADC MUX A/D IO PANEL
BLDG #: 1003A
RACK #: R03A10
PANEL #: MADC A/D IO PANEL D

FR SHEET 38

J9 — CHAN 57 SPARE
J10 — CHAN 58 SPARE
J11 — CHAN 59 SPARE
J12 — CHAN 60 SPARE
J13 — CHAN 61 SPARE
J14 — CHAN 62 SPARE

TO SHEET 11

| -3 | -2 | -1 | REF DESIGNATOR | ITEM NO. | DESCRIPTION | MAT'L. DWG NO.,SPEC. NO. |
|---|---|---|---|---|---|---|
| QTY REQD | | | | | | |

INTERPRET IN GENERAL ACCORDANCE WITH ASME Y14.24M-1989

UNLESS OTHERWISE SPECIFIED DIMENSIONS ARE IN INCHES

DECIMAL TOLERANCES
.X ±.030
.XX ±.015
.XXX ±.005
ANGULAR TOLERANCE ± .5°

OUTSTANDING ECN

NA FINISH

BREAK SHARP EDGES MAX. XX MIN. XX

| | | |
|---|---|---|
| Q.A. CATEGORY A-3 | | DATE |
| DRAWN BY | Phil Pape | 10/31/97 |
| CHECKED BY | | |
| DESIGN APPROVAL | | |
| ENGINEER APPROVAL | R. MICHNOFF | 10/31/97 |
| SUPVR. APPROVAL | | |

NEXT ASSEMBLY

BROOKHAVEN NATIONAL LABORATORY
UPTON, N.Y. 11973

RHIC CONTROLS WIRING DIAGRAM

ALCOVE 1003A

SPARE MADC INPUTS

SIZE D — DRAWING NUMBER 94028336 — REV. A

MATERIAL: ——— SCALE: NA WEIGHT: – SHEET 54

*AUTOCAD