RHIC Accelerator Controls Section
Bldg. 1002B Wiring Diagrams
BNL Drawing Number 94028539

Brookhaven National Laboratory, Upton, New York 11973

Created By: Ed Koropsak
Last Updated 6/20/03

Power Distribution
- & Rack R02B11 (Sheet 1)
- & Rack R02B09, Rack R02B10 (Sheet 2)
- & Rack R02B08 (Sheet 3)

SPARES
- & MADC Channels (Sheet 47)
- & F/O Channels (Sheet 48)

Serial Links
- & Event Link (Sheet 4,5)
- & Real Time Data Link (RTDL) (Sheet 6,7)
- & Reset Link (Sheet 8)
- & Beam Sync Yellow Link (Sheet 9)
- & Beam Sync Blue Link (Sheet 10)

MADC Readbacks
- & DX Heater PS (Sheet 50)
- & VAC & AC PHASE (Sheet 50)

VME Chassis CFE-2B-PS1 modules
- & CPU, Memory Board, V108 Utility Module (Sheet 11)
- & V113/V114 MADC System (Sheet 12)
- & V115 WFG A: bi1-q4, bi1-tq5 (Sheet 13)
- & V115 WFG B: bi1-tq6, bo2-tq4 (Sheet 14)
- & V115 WFG C: bo2-tq5, bo2-tq6 (Sheet 15)
- & V115 WFG D: b2-q89, bo2-qf8 (Sheet 16)
- & V115 WFG E: bi1-qf9, b2-dhx (Sheet 17)
- & V115 WFG F: b2-q7, b2-dh0 (Sheet 18)
- & V115 WFG G: b2-q6 (Sheet 19)
- & V115 WFG H: BLANK (Sheet 20)
- & V115 WFG I: BLANK (Sheet 21)
- & V115 WFG J: BLANK (Sheet 22)
- & V120 Permit Module (Sheet 51)
- & Permit System Interface Panel (Sheet 52)

NOTE: Sheets 20-27, 37-46 are Blank

VME Chassis CFE-2B-PS2 modules
- & CPU, Memory Board, V108 Utility Module (Sheet 28)
- & V113/V114 MADC System (Sheet 29)
- & V115 WFG A: yo1-tq4, yo1-tq5 (Sheet 30)
- & V115 WFG B: yo1-tq6, yi2-tq4 (Sheet 31)
- & V115 WFG C: yi2-tq5, yi2-tq6 (Sheet 32)
- & V115 WFG D: y2-q89, yi2-qf9 (Sheet 33)
- & V115 WFG E: yo1-qf8, y2-dh0 (Sheet 34)
- & V115 WFG F: y2-q7, yo12-th16(Sheet 35)
- & V115 WFG G: y2-q6 (Sheet 36)
- & V115 WFG H: BLANK (Sheet 37)
- & V115 WFG I: BLANK (Sheet 38)
- & V115 WFG J: BLANK (Sheet 39)
- & V102 Delay Module A - Event Link (Sheet 49)

VME Chassis CFE-2B-PS3 modules
- & CPU, Memory Board, V108 Utility Module (Sheet 53)
- & V113/V114 MADC System (Sheet 54)
- & V115 WFG A: bi1-qf1, bo2-qd1 (Sheet 55)
- & V115 WFG B: bi1-qd2, bi1-qf3 (Sheet 56)
- & V115 WFG C: bo2-qf2, bo2-qd3 (Sheet 57)
- & V115 WFG D: bo2-sxf10, bo2-sxd11 (Sheet 58)
- & V115 WFG E: BLANK
- & V115 WFG F: BLANK
- & V115 WFG G: BLANK
- & V115 WFG H: yo1-qd1, yi2-qf1 (Sheet 60)
- & V115 WFG I: yo1-qf2, yo1-qd3 (Sheet 61)
- & V115 WFG J: yi2-qd2, yi2-qf3 (Sheet 62)
- & V115 WFG K: Spare (Sheet 63)

PDF created with FinePrint pdfFactory Pro trial version http://www.fineprint.com

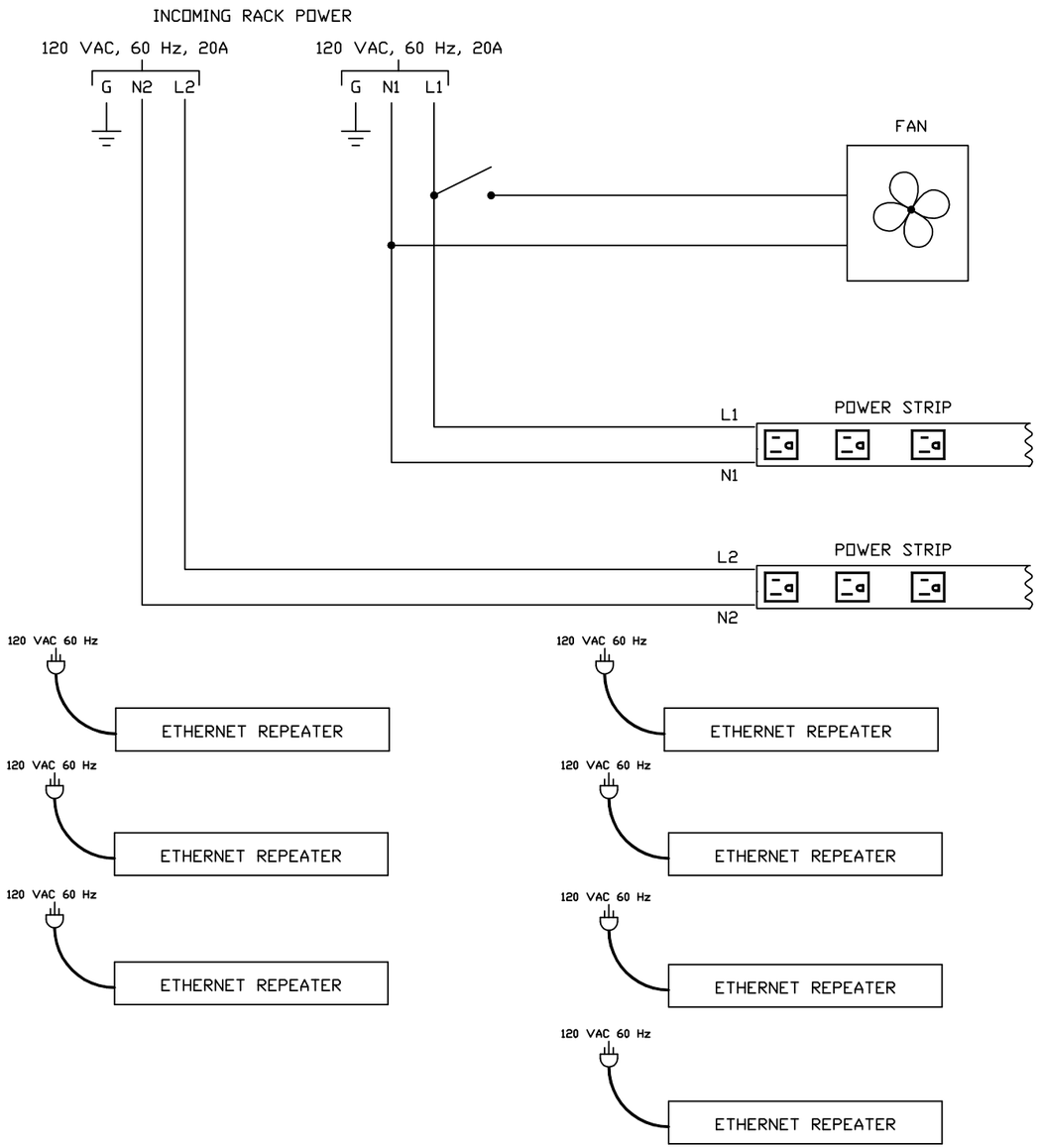

NOTE: ALL 120 VAC, 60 Hz POWER CORDS
PLUG INTO POWER STRIP OUTLETS

RACK R4B11

REV.	ZONE	ECN NO.	DATE	BY	CKR	APP.

QTY REQD -3	QTY REQD -2	QTY REQD -1	REF DESIGNATOR	ITEM NO.	DESCRIPTION	MAT'L DWG NO.,BNL NO.
		X		11	CABLE ASSY, POWER SUPPLY TO MADC A/D I/O PANEL (3 CABLES/PS)	
		X		10	CABLE ASSY, LOW RES PS IF MODULE TO POWER SUPPLY	
		X		9	PERMIT SYSTEM INTERFACE CABLE, T120 TO PERMIT SYSTEM INTERFACE PANEL	D09-E2225-2
		X		8	SERIAL LINK TWINAX CABLE, LENGTH AS REQUIRED	94028176
		X		7	SERIAL LINK TWINAX CABLE, 1 FT	94028176
		X		6	DUPLEX MULTIMODE FIBER OPTIC CABLE, T115 TO LOW RES PS INTERFACE MODULE	94028249
		X		5	SINGLE MODE FIBER OPTIC CABLE	94028251
		X		4	MADC A/D I/O CABLE	94028216
		X		3	TRANSITION MODULE P2 RIBBON CABLE, V115, V120	94028159
		X		2	MADC V113 TO V114 P2 INTERFACE RIBBON CABLE	94028218
		X		1	NETWORK CABLE TO FRONT END COMPUTER	

INTERPRET IN GENERAL ACCORDANCE WITH ASME Y14.24M-1989

UNLESS OTHERWISE SPECIFIED DIMENSIONS ARE IN INCHES

DECIMAL TOLERANCES
.X ±.030
.XX ±.015
.XXX ±.005
ANGULAR TOLERANCE ± .5°

OUTSTANDING ECN

NA FINISH

BREAK SHARP EDGES MAX. XX MIN. XX

Q.A. CATEGORY A-3		DATE
DRAWN BY	Ed Koropsak	1/13/98
CHECKED BY		
DESIGN APPROVAL		
ENGINEER APPROVAL	R. MICHNOFF	1/13/98
SUPVR. APPROVAL		

NEXT ASSEMBLY

BROOKHAVEN NATIONAL LABORATORY
UPTON, N.Y. 11973

RHIC CONTROLS WIRING DIAGRAM
SERVICE BLDG. RACK R2B11
POWER DISTRIBUTION

SIZE D | DRAWING NUMBER 94028539 | REV. A

MATERIAL: ——— | SCALE: NA | WEIGHT: – | SHEET 1 OF 52

1 *AUTOCAD

REV.	ZONE	ECN NO.	DATE	BY	CKR	APP.

Controls, C-AD 6/11/2003 10:39 AM 8539_02.dwg

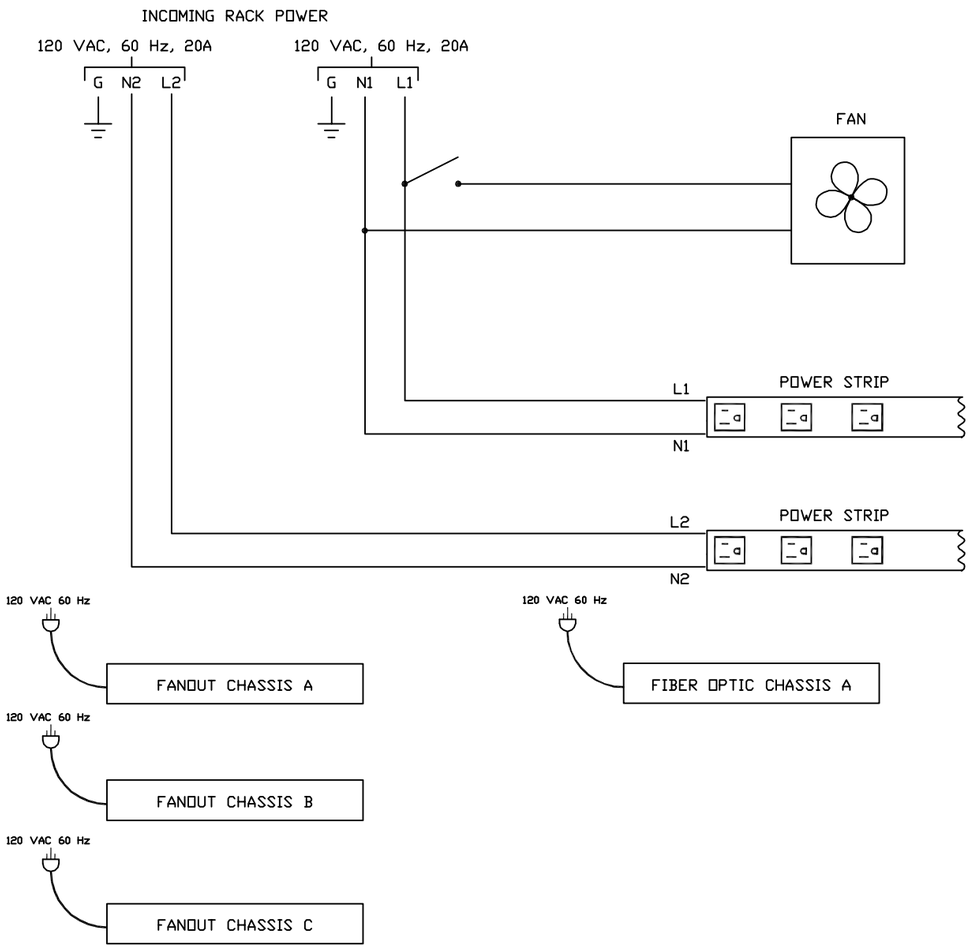

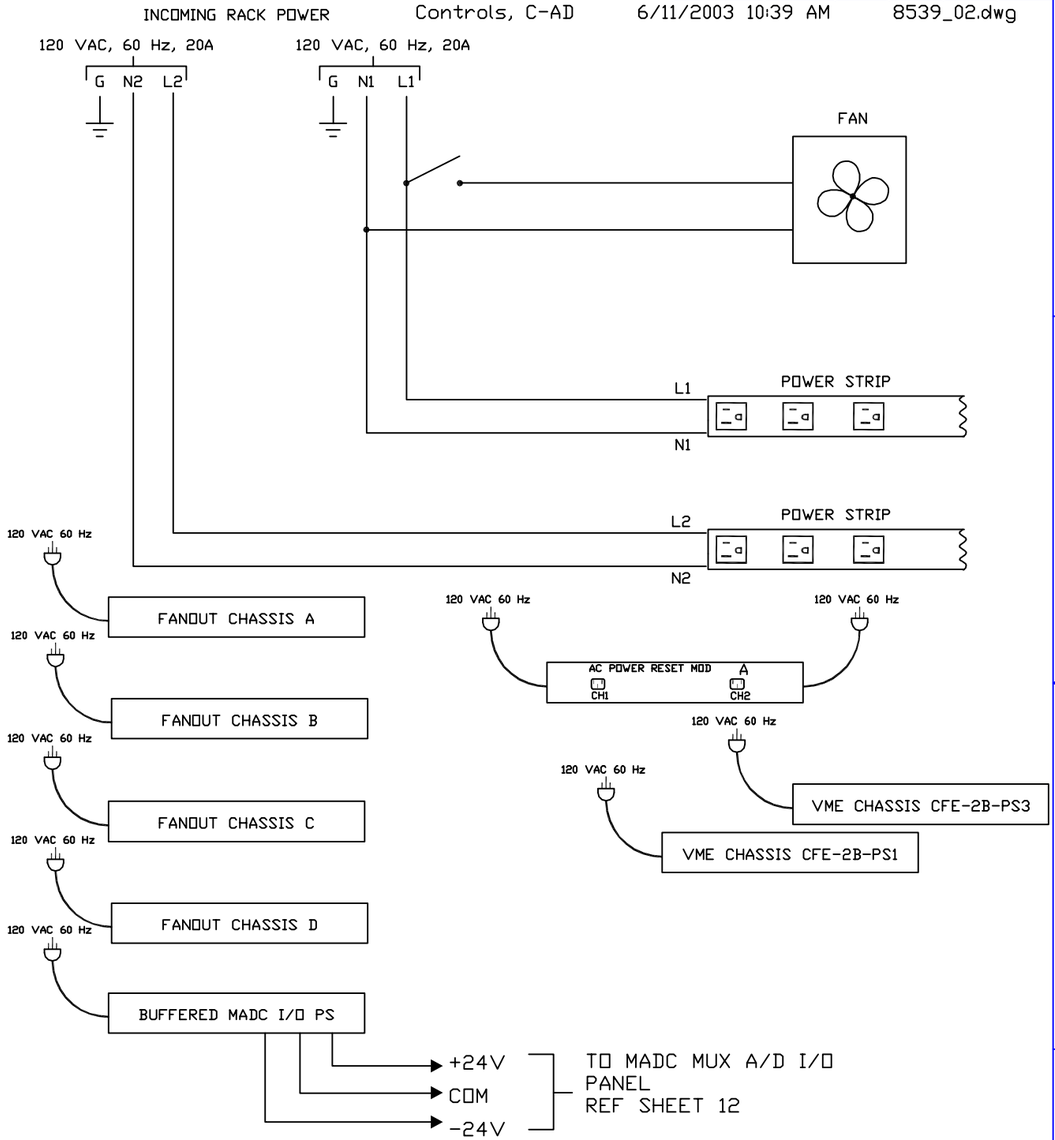

-3 -2 -1 QTY REQD	REF DESIGNATOR	ITEM NO.	DESCRIPTION	MAT'L SPEC NO./PART NO.

INTERPRET IN GENERAL ACCORDANCE WITH ASME Y14.24M-1989	Q.A. CATEGORY A-3	DATE	BROOKHAVEN NATIONAL LABORATORY	
UNLESS OTHERWISE SPECIFIED DIMENSIONS ARE IN INCHES	DRAWN BY Ed Koropsak	5/15/98	UPTON, N.Y. 11973	
DECIMAL TOLERANCES .X ±.030 .XX ±.015 .XXX ±.005 ANGULAR TOLERANCE ± .5°	CHECKED BY		RHIC CONTROLS WIRING DIAGRAM	
	DESIGN APPROVAL		SERVICE BLDG. 1002B RACK R02B10, R02B09	
	ENGINEER APPROVAL R. MICHNOFF	1/13/98	POWER DISTRIBUTION	
	SUPVR. APPROVAL		SIZE D	94028539 REV. A
OUTSTANDING ECN	NA FINISH	BREAK SHARP EDGES MAX. XX MIN. XX	NEXT ASSEMBLY	DRAWING NUMBER
			MATERIAL: ———	SCALE: NA WEIGHT: – SHEET 2 OF 52

PDF created with FinePrint pdfFactory Pro trial version http://www.fineprint.com

REV.	ZONE	ECN NO.	DATE	BY	CKR	APP.

INCOMING RACK POWER Controls, C-AD 6/11/2003 10:43 AM 8539_03.dwg

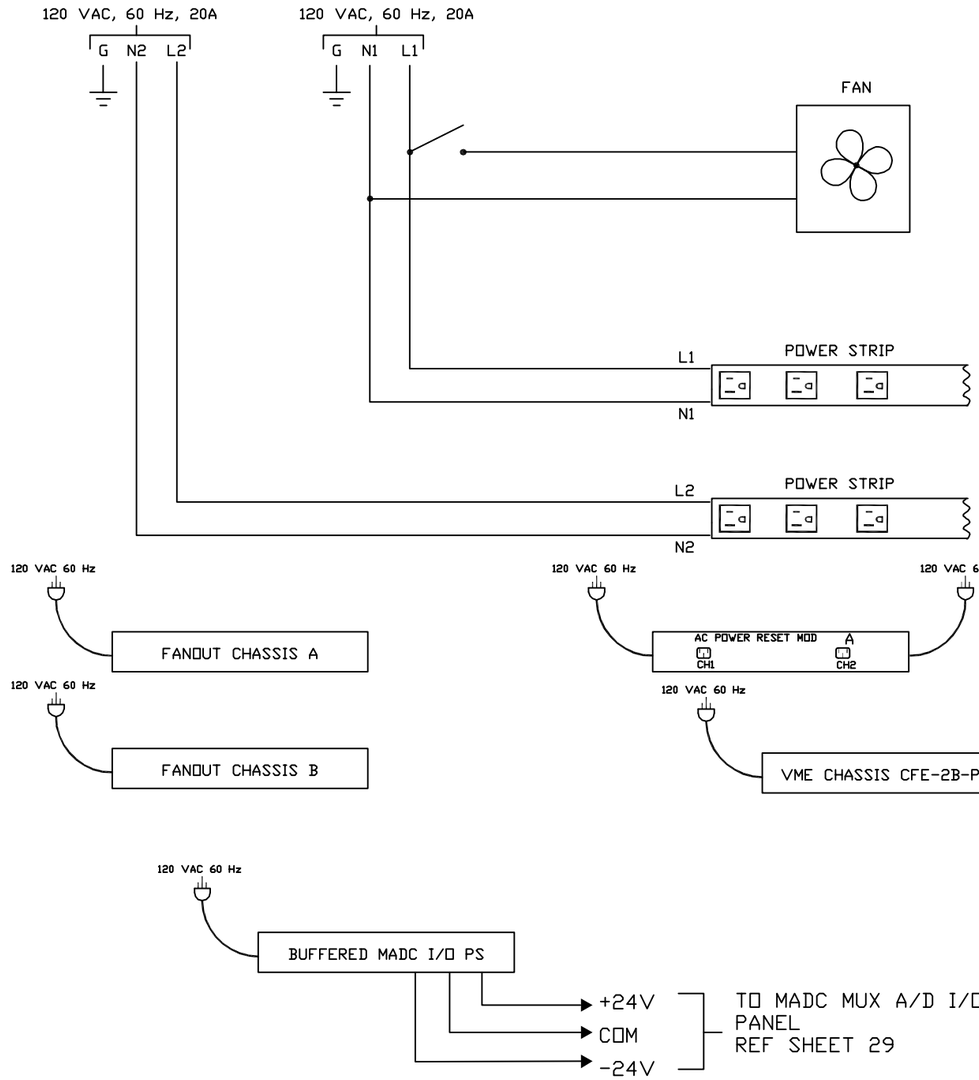

NOTE: ALL 120 VAC, 60 Hz POWER CORDS
PLUG INTO POWER STRIP OUTLETS EXCEPT FOR 6U CHASSIS

RACK R02B08

-3 QTY REQD	-2	-1	REF DESIGNATOR	ITEM NO.	DESCRIPTION	MAT'L DWG NO./BNL NO.

INTERPRET IN GENERAL ACCORDANCE WITH ASME Y14.24M-1989
UNLESS OTHERWISE SPECIFIED DIMENSIONS ARE IN INCHES
DECIMAL TOLERANCES .X ±.030 .XX ±.015 .XXX ±.005
ANGULAR TOLERANCE ± .5°
OUTSTANDING ECN
NA FINISH
BREAK SHARP EDGES MAX. XX MIN. XX

Q.A. CATEGORY A-3		DATE
DRAWN BY	Ed Koropsak	1/13/98
CHECKED BY		
DESIGN APPROVAL		
ENGINEER APPROVAL	R. MICHNOFF	1/13/98
SUPVR. APPROVAL		
NEXT ASSEMBLY		

BROOKHAVEN NATIONAL LABORATORY
UPTON, N.Y. 11973
RHIC CONTROLS WIRING DIAGRAM
SERVICE BLDG. 1002B RACK R02B08
POWER DISTRIBUTION

SIZE D | 94028539 | REV. A
DRAWING NUMBER
MATERIAL: ——— SCALE: NA WEIGHT: – SHEET 3 OF 52

1 *AUTOCAD

PDF created with FinePrint pdfFactory Pro trial version http://www.fineprint.cn

REV.	ZONE	ECN NO.	DATE	BY	CKR	APP.

Controls, C-AD 6/11/2003 11:26 AM 8539_04.dwg

1x8 SINGLEMODE FIBER OPTIC COUPLER

FROM:
BLDG # 1004B
RACK # R04B02
MIC # 064A

EVENT LINK
BLDG # 1002B
RACK # R02B11
MIC ID # MIC 062A
REAR FRONT E1

ASSY# 94028251
SINGLE MODE FIBER
LENGTH AS REQUIRED
(TYP 8 PLACES)

EVENT LINK
BLDG # 1002B
RACK # R2B11
COUPLER # A
ASSY # 58030006
INPUT
OUTPUT
1 2 3 4 5 6 7 8

SINGLE MODE F/O RECEIVER
EVENT LINK
BLDG # 1002B
RACK # R02B10
CHASSIS # F/O CHASSIS A
SLOT # 9
FRONT
ASSY# 94028101
TESTPOINT CH1
FIBEROPTIC INPUT CH1
REAR
ASSY# DD9-E-2542
ECL/TTL DATA OUT 1A
ECL/TTL DATA OUT 1B
TO SHEET 6
BACKPLANE CONNECTION

EVENT LINK
BLDG # 1002B
RACK # R02B11
MIC ID # MIC 062C
FRONT A1 REAR
To BLDG 1001C, RACK R01C08, MIC 075A/A1
REF DWG 94028458, SHEET 4

EVENT LINK
BLDG # 1002B
RACK # R02B11
MIC ID # MIC 062D
FRONT A1 REAR
To BLDG 1003A, RACK R03A08, MIC 076A/A1
REF DWG 94028336, SHEET 4

EVENT LINK
BLDG # 1002B
RACK # R02B11
MIC ID # MIC 062E
FRONT A1 REAR
To BLDG 1003B, RACK R03B08, MIC 077A/A1
REF DWG 94028352, SHEET 4

EVENT LINK
BLDG # 1002B
RACK # R02B11
MIC ID # MIC 062B
FRONT A1 REAR
To BLDG 1002A, RACK R020, MIC 074/A1
REF DWG 94028727, SHEET 4

EVENT LINK
BLDG # 1002B
RACK # R02B11
MIC ID # MIC 062F
FRONT I1 REAR
To BLDG 1002C, R2C13, MIC 107A
REF DWG 94028XXX, SHEET 4

EVENT LINK
BLDG # 1002B
RACK # R02B11
MIC ID # MIC 062F
FRONT B1 REAR
To BLDG 1002D, Rxxx, MIC 106A
REF DWG 94028XXX, SHEET ?

EVENT LINK
BLDG # 1002B
RACK # R02B10
FANOUT # A
ASSY # DD9-E2442-5
INPUT J1
OUTPUT
J2 J3 J4 J5 J6 J7 J8 J9 J10 J11 J12 J13 J14 J15 J16 J17

EVENT LINK
BLDG #: 1002B
RACK #: R02B09
FANOUT #: A
ASSY# DD9-E-2442
INPUT J1
TO SHEET 5

SPARE

EVENT LINK
BLDG #: 1002B
RACK #: R02B08
FANOUT #: A
ASSY# DD9-E-2442
INPUT J1
TO SHEET 5

SPARE
SPARE
SPARE
TO CFE-2B-PS1, SLOT 3, V108
REF SHEET 11
TO CFE-2B-PS2, SLOT 3, V108
REF SHEET 28
TO CFE-2B-QD1, SLOT 3, V108
QUENCH GROUP
TO CFE-2B-QD2, SLOT 3, V108
QUENCH GROUP
SPARE
SPARE
TO CFE-2B-PS3, SLOT 3, V108
REF SHEET 53

EVENT LINK
BLDG #: 1002B
RACK #: R02B09
FANOUT #: C
ASSY# DD9-E-2442
INPUT J1
TO SHEET 5

TO CFE-2B-QD1, SLOT 3, V102
QUENCH GROUP
TO CFE-2B-QD2, SLOT 3, V102
QUENCH GROUP

-3	-2	-1	QTY REQD	REF DESIGNATOR	ITEM NO.	DESCRIPTION	MAT'L DWG NO./ENG. NO.

INTERPRET IN GENERAL ACCORDANCE WITH ASME Y14.24M-1989
UNLESS OTHERWISE SPECIFIED DIMENSIONS ARE IN INCHES
DECIMAL TOLERANCES .X ±.030 .XX ±.015 .XXX ±.005
ANGULAR TOLERANCE ± .5°
FINISH NA
BREAK SHARP EDGES MAX. XX MIN. XX
OUTSTANDING ECN
Q.A. CATEGORY A-3
DRAWN BY Ed Koropsak 1/26/98
CHECKED BY
DESIGN APPROVAL
ENGINEER APPROVAL R. MICHNOFF 1/26/98
SUPVR. APPROVAL
NEXT ASSEMBLY
DATE

BROOKHAVEN NATIONAL LABORATORY
UPTON, N.Y. 11973
RHIC CONTROLS WIRING DIAGRAM
SERVICE BLDG 1002B
EVENT LINK
SIZE D
94028539
REV. A
DRAWING NUMBER
MATERIAL: ——— SCALE: NA WEIGHT: – SHEET 4 OF 52

PDF created with FinePrint pdfFactory Pro trial version http://www.fineprint.com

REV.	ZONE	ECN NO.	DATE	BY	CKR	APP.

Controls, C-AD 6/12/2003 8:39 AM 8539_05.dwg

EVENT LINK FANOUT MODULE

BLDG # 1002B
RACK # R02B09
FANOUT # A

FROM SHEET 4
ASSY # DD9-E2442-5

OUTPUT

J2	TO CFE-2B-PS1, SLOT 21, V120 REF SHEET 51
J3	To CFE-2B-PS1, SLOT 4, V113 REF SHEET 12
J4	SPARE
J5	SPARE
J6	TO CFE-2B-PS1, SLOT 17, T215 REF SHEET 22
J7	TO CFE-2B-PS1, SLOT 16, T215 REF SHEET 21
J8	TO CFE-2B-PS1, SLOT 15, T215 REF SHEET 20
J9	To CFE-2B-PS1, SLOT 14, T115 REF SHEET 19
J10	To CFE-2B-PS1, SLOT 13, T115 REF SHEET 18
J11	To CFE-2B-PS1, SLOT 12, T115 REF SHEET 17
J12	To CFE-2B-PS1, SLOT 11, T115 REF SHEET 16
J13	SPARE
J14	SPARE
J15	SPARE
J16	SPARE
J17	SPARE

EVENT LINK FANOUT MODULE

BLDG # 1002B
RACK # R02B09
FANOUT # C

FROM SHEET 4
ASSY # DD9-E2442-5

OUTPUT

J2	To CFE-2B-PS3, SLOT 18, V115 REF SHEET 55
J3	To CFE-2B-PS3, SLOT 13, V113 REF SHEET 54
J4	To CFE-2B-PS3, SLOT 17, V115 REF SHEET 56
J5	To CFE-2B-PS3, SLOT 16, V115 REF SHEET 57
J6	To CFE-2B-PS3, SLOT 15, V115 REF SHEET 58
J7	SPARE
J8	SPARE
J9	SPARE
J10	SPARE
J11	SPARE
J12	To CFE-2B-PS3, SLOT 9, V115 REF SHEET 60
J13	To CFE-2B-PS3, SLOT 8, V115 REF SHEET 61
J14	To CFE-2B-PS3, SLOT 7, V115 REF SHEET 62
J15	To CFE-2B-PS3, SLOT 6, V115 REF SHEET 63
J16	To CFE-2B-PS3, SLOT 4, V113 REF SHEET 54
J17	SPARE

EVENT LINK FANOUT MODULE

BLDG # 1002B
RACK # R02B08
FANOUT # A

FROM SHEET 4
ASSY # DD9-E2442-5

OUTPUT

J2	To CFE-2B-PS2, SLOT 20, V102 REF SHEET 49
J3	To CFE-2B-PS2, SLOT 4, V113 REF SHEET 29
J4	SPARE
J5	SPARE
J6	TO CFE-2B-PS2, SLOT 17, T215 REF SHEET 39
J7	TO CFE-2B-PS1, SLOT 16, T215 REF SHEET 38
J8	TO CFE-2B-PS1, SLOT 15, T215 REF SHEET 37
J9	To CFE-2B-PS2, SLOT 14, T115 REF SHEET 36
J10	To CFE-2B-PS2, SLOT 13, T115 REF SHEET 35
J11	To CFE-2B-PS2, SLOT 12, T115 REF SHEET 34
J12	To CFE-2B-PS2, SLOT 11, T115 REF SHEET 33
J13	SPARE
J14	SPARE
J15	SPARE
J16	SPARE
J17	SPARE

-3	-2	-1	QTY REQD	REF DESIGNATOR	ITEM NO.	DESCRIPTION	MAT'L DWG NO./PNL NO.

INTERPRET IN GENERAL ACCORDANCE WITH ASME Y14.24M-1989
UNLESS OTHERWISE SPECIFIED DIMENSIONS ARE IN INCHES
DECIMAL TOLERANCES .X ±.030 .XX ±.015 .XXX ±.005 ANGULAR TOLERANCE ± .5°
OUTSTANDING ECN
NA FINISH
BREAK SHARP EDGES MAX. XX MIN. XX

Q.A. CATEGORY	A-3	DATE
DRAWN BY	Ed Koropsak	5/7/98
CHECKED BY		
DESIGN APPROVAL		
ENGINEER APPROVAL	R. MICHNOFF	5/7/98
SUPVR. APPROVAL		

NEXT ASSEMBLY

BROOKHAVEN NATIONAL LABORATORY
UPTON, N.Y. 11973
RHIC CONTROLS WIRING DIAGRAM
1002B
EVENT LINK

SIZE D | DRAWING NUMBER 94028539 | REV. A
MATERIAL: ——— | SCALE: NA | WEIGHT: – | SHEET 5 of 52

PDF created with FinePrint pdfFactory Pro trial version http://www.fineprint.com

REV.	ZONE	ECN NO.	DATE	BY	CKR	APP.

Controls, C-AD 6/11/2003 11:51 AM 8539_06.dwg

1x8 SINGLEMODE FIBER OPTIC COUPLER

FROM:
BLDG # 1004B
RACK # R04B02
MIC # 064A

RTDL
BLDG # 1002B
RACK # R02B11
MIC ID # MIC 062A
REAR | FRONT
E2

ASSY# 94028251
SINGLE MODE FIBER
LENGTH AS REQUIRED
(TYP 8 PLACES)

RTDL
BLDG # 1002B
RACK # R02B11
COUPLER # B

ASSY # 58030006

INPUT

OUTPUT
1
2
3
4
5
6
7
8

RTDL
BLDG # 1002B
RACK # R02B10
CHASSIS # F/O A
SLOT # 9

TESTPOINT CH2
FIBEROPTIC INPUT CH2
ECL/TTL DATA OUT 2A
ECL/TTL DATA OUT 2B

BACKPLANE CONNECTION

RTDL
BLDG # 1002B
RACK # R02B11
MIC ID # MIC 062C
FRONT | REAR
A2

To BLDG 1001C, RACK R01C08, MIC 075A/A2
REF DWG 94028458, SHEET 6

RTDL
BLDG # 1002B
RACK # R02B11
MIC ID # MIC 062D
FRONT | REAR
A2

To BLDG 1003A, RACK R03A08, MIC 076A/A2
REF DWG 94028336, SHEET 6

RTDL
BLDG # 1002B
RACK # R02B11
MIC ID # MIC 062E
FRONT | REAR
A2

To BLDG 1003B, RACK R03B08, MIC 077A/A2
REF DWG 94028352, SHEET 6

RTDL
BLDG # 1002B
RACK # R02B11
MIC ID # MIC 062B
FRONT | REAR
A2

To BLDG 1002A, RACK R020, MIC 074/A2
REF DWG 94028XXX, SHEET 6

RTDL
BLDG # 1002B
RACK # R02B11
MIC ID # MIC 062F
FRONT | REAR
I2

To BLDG 1002C, RACK R2C13, MIC 107A/A2
REF DWG 94028XXX, SHEET 6

RTDL
BLDG # 1002B
RACK # R02B11
MIC ID # MIC 062F
FRONT | REAR
B2

To BLDG 1002D, RACK Rxxx, MIC 106A/B2
REF DWG 94028XXX, SHEET ?

RTDL
BLDG # 1002B
RACK # R02B10
FANOUT # B

ASSY # DD9-E2442-5

INPUT J1

OUTPUT
J2
J3
J4
J5
J6
J7
J8
J9
J10
J11
J12
J13
J14
J15
J16
J17

RTDL
BLDG #: 1002B
RACK #: R02B09
FANOUT #: B

ASSY# DD9-E-2442
INPUT J1
TO SHEET 5

SPARE

RTDL
BLDG #: 1002B
RACK #: R02B08
FANOUT #: B

ASSY# DD9-E-2442
INPUT J1
TO SHEET 5

SPARE
SPARE
SPARE
TO CFE-2B-PS1, SLOT 3, V108
REF SHEET 11
TO CFE-2B-PS2, SLOT 3, V108
REF SHEET 28
TO CFE-2B-QD1, SLOT 3, V108
QUENCH GROUP
TO CFE-2B-QD2, SLOT 3, V108
QUENCH GROUP
SPARE
SPARE
TO CFE-2B-PS3, SLOT 3, V108
REF SHEET 53

RTDL
BLDG #: 1002B
RACK #: R02B09
FANOUT #: D

ASSY# DD9-E-2442
INPUT J1
TO SHEET 5

SPARE
SPARE

-3	-2	-1	QTY REQD	REF DESIGNATOR	ITEM NO.	DESCRIPTION	MAT'L SPEC NO./DWG NO.

INTERPRET IN GENERAL ACCORDANCE WITH ASME Y14.24M-1989
UNLESS OTHERWISE SPECIFIED DIMENSIONS ARE IN INCHES
DECIMAL TOLERANCES .X ±.030 .XX ±.015 .XXX ±.005
ANGULAR TOLERANCE ± .5'
FINISH NA
BREAK SHARP EDGES MAX. XX MIN. XX
OUTSTANDING ECN

Q.A. CATEGORY A-3	DATE	BROOKHAVEN NATIONAL LABORATORY	
DRAWN BY Ed Koropsak	5/7/98	UPTON, N.Y. 11973	
CHECKED BY		RHIC CONTROLS WIRING DIAGRAM	
DESIGN APPROVAL		SERVICE BLDG 1002B	
ENGINEER APPROVAL R. MICHNOFF	5/7/98	RTDL	
SUPVR. APPROVAL		SIZE D — 94028539 — REV. A	
NEXT ASSEMBLY		DRAWING NUMBER	
MATERIAL: ———	SCALE: NA	WEIGHT: –	SHEET 6 OF 52

*AUTOCAD

PDF created with FinePrint pdfFactory Pro trial version http://www.fineprint.com

REV.	ZONE	ECN NO.	DATE	BY	CKR	APP.

Controls, C-AD 6/12/2003 8:44 AM 8539_07.dwg

RTDL FANOUT MODULE
BLDG # 1002B
RACK # R02B09
FANOUT # B

FROM SHEET 6
ASSY # DD9-E2442-5

OUTPUT

J2	SPARE	
J3	SPARE	
J4	SPARE	
J5	SPARE	
J6	TO CFE-2B-PS1, SLOT 17, T215	REF SHEET 22
J7	TO CFE-2B-PS1, SLOT 16, T215	REF SHEET 21
J8	TO CFE-2B-PS1, SLOT 15, T215	REF SHEET 20
J9	To CFE-2B-PS1, SLOT 14, T115	REF SHEET 19
J10	To CFE-2B-PS1, SLOT 13, T115	REF SHEET 18
J11	To CFE-2B-PS1, SLOT 12, T115	REF SHEET 17
J12	To CFE-2B-PS1, SLOT 11, T115	REF SHEET 16
J13	SPARE	
J14	SPARE	
J15	SPARE	
J16	SPARE	
J17	SPARE	

RTDL FANOUT MODULE
BLDG # 1002B
RACK # R02B09
FANOUT # D

FROM SHEET 6
ASSY # DD9-E2442-5

OUTPUT

J2	To CFE-2B-PS3, SLOT 18, V115	REF SHEET 55
J3	SPARE	
J4	To CFE-2B-PS3, SLOT 15, V115	REF SHEET 56
J5	To CFE-2B-PS3, SLOT 16, V115	REF SHEET 57
J6	To CFE-2B-PS3, SLOT 15, V115	REF SHEET 58
J7	SPARE	
J8	SPARE	
J9	SPARE	
J10	SPARE	
J11	SPARE	
J12	To CFE-2B-PS3, SLOT 9, V115	REF SHEET 60
J13	To CFE-2B-PS3, SLOT 8, V115	REF SHEET 61
J14	To CFE-2B-PS3, SLOT 7, V115	REF SHEET 62
J15	To CFE-2B-PS3, SLOT 6, V115	REF SHEET 63
J16	SPARE	
J17	SPARE	

RTDL FANOUT MODULE
BLDG # 1002B
RACK # R02B08
FANOUT # B

FROM SHEET 6
ASSY # DD9-E2442-5

OUTPUT

J2	SPARE	
J3	SPARE	
J4	SPARE	
J5	SPARE	
J6	TO CFE-2B-PS2, SLOT 17, T215	REF SHEET 39
J7	TO CFE-2B-PS2, SLOT 16, T215	REF SHEET 38
J8	TO CFE-2B-PS2, SLOT 15, T215	REF SHEET 37
J9	To CFE-2B-PS2, SLOT 14, T115	REF SHEET 36
J10	To CFE-2B-PS2, SLOT 13, T115	REF SHEET 35
J11	To CFE-2B-PS2, SLOT 12, T115	REF SHEET 34
J12	To CFE-2B-PS2, SLOT 11, T115	REF SHEET 33
J13	SPARE	
J14	SPARE	
J15	SPARE	
J16	SPARE	
J17	SPARE	

-3 / -2 / -1 QTY REQD	REF DESIGNATOR	ITEM NO.	DESCRIPTION	MATL DWG NO./ENG. NO.

INTERPRET IN GENERAL ACCORDANCE WITH ASME Y14.24M-1989
UNLESS OTHERWISE SPECIFIED DIMENSIONS ARE IN INCHES
DECIMAL TOLERANCES .X ±.030 .XX ±.015 .XXX ±.005
ANGULAR TOLERANCE ± .5°
FINISH NA
BREAK SHARP EDGES MAX. XX MIN. XX
OUTSTANDING ECN
NEXT ASSEMBLY

Q.A. CATEGORY A-3

DRAWN BY	Ed Koropsak	5/15/98
CHECKED BY		
DESIGN APPROVAL		
ENGINEER APPROVAL	R. MICHNOFF	5/7/98
SUPVR. APPROVAL		

BROOKHAVEN NATIONAL LABORATORY
UPTON, N.Y. 11973
RHIC CONTROLS WIRING DIAGRAM
1002B
REAL TIME DATA LINK

SIZE D | 94028539 | REV. A
DRAWING NUMBER
MATERIAL: ——— SCALE: NA WEIGHT: – SHEET 7 OF 52

*AUTOCAD

PDF created with FinePrint pdfFactory Pro trial version http://www.fineprint.com

REV.	ZONE	ECN NO.	DATE	BY	CKR	APP.

C-A, BNL 5/8/01 8:49 AM 8539_08.dwg

1x8 SINGLEMODE FIBER OPTIC COUPLER

FROM:
BLDG # 1004B
RACK # R04B02
MIC # 064A

RESET LINK
BLDG # 1002B
RACK # R02B11
MIC ID # MIC 062A
REAR | FRONT | E3

ASSY# 94028251
SINGLE MODE FIBER
LENGTH AS REQUIRED
(TYP 8 PLACES)

RESET LINK
BLDG # 1002B
RACK # R2B11
COUPLER # C
ASSY # 58030006
INPUT
OUTPUT
1
2
3
4
5
6
7
8

SINGLE MODE F/O RECEIVER
RESET LINK
BLDG # 1002B
RACK # R02B10
CHASSIS # F/O CHASSIS A
SLOT # 8
FRONT
ASSY# 94028101
TESTPOINT CH1
FIBEROPTIC INPUT CH1
REAR
ASSY# DD9-E-2542
ECL/TTL DATA OUT 1A
ECL/TTL DATA OUT 1B
TO SHEET 48
BACKPLANE CONNECTION

RESET LINK
BLDG # 1002B
RACK # R02B11
MIC ID # MIC 062C
FRONT | REAR | A3
To BLDG 1001C, RACK R01C08, MIC 075A/A3
REF DWG 94028548, SHEET 8

RESET LINK
BLDG # 1002B
RACK # R02B11
MIC ID # MIC 062D
FRONT | REAR | A3
To BLDG 1003A, RACK R03A08, MIC 076A/A3
REF DWG 94028336, SHEET 8

RESET LINK
BLDG # 1002B
RACK # R02B11
MIC ID # MIC 062E
FRONT | REAR | A3
To BLDG 1003B, RACK R03B08, MIC 077A/A3
REF DWG 94028352, SHEET 8

RESET LINK
BLDG # 1002B
RACK # R02B11
MIC ID # MIC 062B
FRONT | REAR | A3
To BLDG 1002A, RACK R020, MIC 074A/A3
REF DWG 94028XXX, SHEET 8

RESET LINK
BLDG # 1002B
RACK # R02B11
MIC ID # MIC 062F
FRONT | REAR | I3
To BLDG 1002C, RACK R2C13, MIC 107A/A3
REF DWG 94028XXX, SHEET 8

RESET LINK
BLDG # 1002B
RACK # R02B11
MIC ID # MIC 062F
FRONT | REAR | B3
To BLDG 1002D, RACK Rxxx, MIC 106A/B3
REF DWG 94028XXX, SHEET ?

RESET LINK
BLDG # 1002B
RACK # R02B10
FANOUT # C
ASSY # DD9-E2442-5
INPUT J1
OUTPUT
J2 SPARE
J3 SPARE
J4 SPARE
J5 SPARE
J6 SPARE
J7 SPARE
J8 TO CFE-2B-PS1, SLOT 3, V108 REF SHEET 11
J9 TO CFE-2B-PS2, SLOT 3, V108 REF SHEET 28
J10 TO CFE-2B-QD1, SLOT 3, V108 QUENCH GROUP
J11 TO CFE-2B-QD2, SLOT 3, V108 QUENCH GROUP
J12
J13 TO CFE-2A-PS3, SLOT 3, V108 REF SHEET 53
J14 SPARE
J15 SPARE
J16 SPARE
J17

AC POWER RESET
BLDG #: 1002B
RACK #: R2B09
MODULE #: A
ASSY# DD9-E2653
RESET LINK

AC POWER RESET
BLDG #: 1002B
RACK #: R2B10
MODULE #: A
ASSY# DD9-E2653
RESET LINK

-3	-2	-1	REF DESIGNATOR	ITEM NO.	DESCRIPTION	MAT'L DWG NO./PRL NO.
QTY REQD						

INTERPRET IN GENERAL ACCORDANCE WITH ASME Y14.24M-1989
UNLESS OTHERWISE SPECIFIED DIMENSIONS ARE IN INCHES
DECIMAL TOLERANCES .X ±.030 .XX ±.015 .XXX ±.005
ANGULAR TOLERANCE ± .5°
FINISH NA
BREAK SHARP EDGES MAX. XX MIN. XX
OUTSTANDING ECN

Q.A. CATEGORY A-3	DATE	BROOKHAVEN NATIONAL LABORATORY	
DRAWN BY Ed Koropsak	5/7/98	UPTON, N.Y. 11973	
CHECKED BY		RHIC CONTROLS WIRING DIAGRAM	
DESIGN APPROVAL		SERVICE BLDG 1002B	
ENGINEER APPROVAL R. MICHNOFF	5/7/98	RESET LINK	
SUPVR. APPROVAL		NEXT ASSEMBLY	SIZE D / 94028539 / REV. A
			MATERIAL: —— SCALE: NA WEIGHT: — SHEET 8

PDF created with FinePrint pdfFactory Pro trial version http://www.fineprint.com

REV.	ZONE	ECN NO.	DATE	BY	CKR	APP.

C-A, BNL 5/8/01 8:56 AM 8539_09.dwg

1x8 SINGLEMODE FIBER OPTIC COUPLER

BEAM SYNC YELLOW LINK
BLDG # 1002B
RACK # R02B11
COUPLER # D

ASSY # 58030006

INPUT

OUTPUT
1
2
3
4
5
6
7
8

BEAM SYNC YELLOW LINK
BLDG # 1002B
RACK # R02B11
MIC ID # MIC 062A
REAR E4 FRONT

FROM:
BLDG # 1004A
RACK # CR1
MIC # 068C

ASSY# 94028251
SINGLE MODE FIBER
LENGTH AS REQUIRED
(TYP 6 PLACES)

BEAM SYNC YELLOW LINK
BLDG # 1002B
RACK # R02B11
MIC ID # MIC 062C
FRONT A4 REAR
To BLDG 1001C, RACK R01C08, MIC 075A/A4
REF DWG 94028548, SHEET 9

BEAM SYNC YELLOW LINK
BLDG # 1002B
RACK # R02B11
MIC ID # MIC 062D
FRONT A4 REAR
To BLDG 1003A, RACK R03A08, MIC 076A/A4
REF DWG 94028336, SHEET 9

BEAM SYNC YELLOW LINK
BLDG # 1002B
RACK # R02B11
MIC ID # MIC 062E
FRONT A4 REAR
To BLDG 1003B, RACK R03B08, MIC 077A/A4
REF DWG 94028352, SHEET 9

BEAM SYNC YELLOW LINK
BLDG # 1002B
RACK # R02B11
MIC ID # MIC 062B
FRONT A4 REAR
To BLDG 1002A, RACK R020, MIC 074/A4
REF DWG 94028XXX, SHEET 9

BEAM SYNC YELLOW LINK
BLDG # 1002B
RACK # R02B11
MIC ID # MIC 062F
FRONT I4 REAR
To BLDG 1002C, RACK R2C13, MIC 107A/A4
REF DWG 94028XXX, SHEET 9

BEAM SYNC YELLOW LINK
BLDG # 1002B
RACK # R02B11
MIC ID # MIC 062F
FRONT B4 REAR
To BLDG 1002D, RACK Rxxx, MIC 106A/B4
REF DWG 94028XXX, SHEET ?

-3	-2	-1 QTY REQD	REF DESIGNATOR	ITEM NO.	DESCRIPTION	MAT'L DWG NO./BNL NO.

INTERPRET IN GENERAL ACCORDANCE WITH ASME Y14.24M-1989
UNLESS OTHERWISE SPECIFIED DIMENSIONS ARE IN INCHES
DECIMAL TOLERANCES .X ±.030 .XX ±.015 .XXX ±.005
ANGULAR TOLERANCE ± .5°
NA FINISH
BREAK SHARP EDGES MAX. XX MIN. XX
OUTSTANDING ECN

Q.A. CATEGORY A-3

DRAWN BY	Ed Koropsak	5/7/98
CHECKED BY		
DESIGN APPROVAL		
ENGINEER APPROVAL	R. MICHNOFF	5/7/98
SUPVR. APPROVAL		

NEXT ASSEMBLY

BROOKHAVEN NATIONAL LABORATORY
UPTON, N.Y. 11973
RHIC CONTROLS WIRING DIAGRAM
SERVICE BLDG 1002B
BEAM SYNC YELLOW LINK

SIZE D | 94028539 DRAWING NUMBER | REV. A

MATERIAL: ——— SCALE: NA WEIGHT: – SHEET 9 OF 52

8 7 6 5 4 3 2 1 *AUTOCAD

REV.	ZONE	ECN NO.	DATE	BY	CKR	APP.

C-A, BNL 5/8/01 9:06 AM 8539_10.dwg

1x8 SINGLEMODE FIBER OPTIC COUPLER

BEAM SYNC BLUE LINK
BLDG # 1002B
RACK # R02B11
COUPLER # E

ASSY # 58030006

INPUT

OUTPUT
1
2
3
4
5
6
7
8

BEAM SYNC BLUE LINK
BLDG # 1002B
RACK # R02B11
MIC ID # MIC 062A
REAR E5 FRONT

FROM:
BLDG # 1004A
RACK # CR1
MIC # 068C

ASSY# 94028251
SINGLE MODE FIBER
LENGTH AS REQUIRED
(TYP 6 PLACES)

BEAM SYNC BLUE LINK
BLDG # 1002B
RACK # R02B11
MIC ID # MIC 062C
FRONT A5 REAR
To BLDG 1001C, RACK R01C08, MIC 075A/A5
REF DWG 94028548, SHEET 10

BEAM SYNC BLUE LINK
BLDG # 1002B
RACK # R02B11
MIC ID # MIC 062D
FRONT A5 REAR
To BLDG 1003A, RACK R03A08, MIC 076A/A5
REF DWG 94028336, SHEET 10

BEAM SYNC BLUE LINK
BLDG # 1002B
RACK # R02B11
MIC ID # MIC 062E
FRONT A5 REAR
To BLDG 1003B, RACK R03B08, MIC 077A/A5
REF DWG 94028352, SHEET 10

BEAM SYNC BLUE LINK
BLDG # 1002B
RACK # R02B11
MIC ID # MIC 062B
FRONT A5 REAR
To BLDG 1002A, RACK R020, MIC 074/A5
REF DWG 94028XXX, SHEET 10

BEAM SYNC BLUE LINK
BLDG # 1002B
RACK # R02B11
MIC ID # MIC 062F
FRONT I5 REAR
To BLDG 1002C, RACK R2C13, MIC 107A/A5
REF DWG 94028XXX, SHEET 10

BEAM SYNC BLUE LINK
BLDG # 1002B
RACK # R02B11
MIC ID # MIC 062F
FRONT B5 REAR
To BLDG 1002D, RACK Rxxx, MIC 106A/B5
REF DWG 94028XXX, SHEET ?

-3	-2	-1	QTY REQD	REF DESIGNATOR	ITEM NO.	DESCRIPTION	MAT'L DWG NO./BNL NO.

INTERPRET IN GENERAL ACCORDANCE WITH ASME Y14.24M-1989
UNLESS OTHERWISE SPECIFIED DIMENSIONS ARE IN INCHES
DECIMAL TOLERANCES
X ±.030
.XX ±.015
.XXX ±.005
ANGULAR TOLERANCE ± .5°
NA FINISH
BREAK SHARP EDGES
MAX. XX MIN. XX
OUTSTANDING ECN

Q.A. CATEGORY A-3		DATE
DRAWN BY	Ed Koropsak	5/7/98
CHECKED BY		
DESIGN APPROVAL		
ENGINEER APPROVAL	R. MICHNOFF	5/7/98
SUPVR. APPROVAL		
NEXT ASSEMBLY		

BROOKHAVEN NATIONAL LABORATORY
UPTON, N.Y. 11973
RHIC CONTROLS WIRING DIAGRAM
SERVICE BLDG 1002B
BEAM SYNC BLUE LINK

SIZE D | 94028539 DRAWING NUMBER | REV. A

MATERIAL: ——— SCALE: NA WEIGHT: — SHEET 10 OF 52

8 7 6 5 4 3 2 1 *AUTOCAD

FRONT END COMPUTER

BLDG #: 1002B
RACK #: R02B09
CHASSIS ID: CFE-2B-PS1
SLOT#: 1
FEC NAME: cfe-2b-ps1

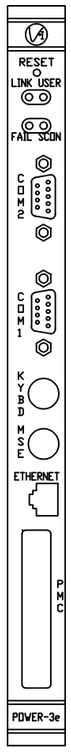

ETHERNET NETWORK

REF. NETWORK DIAGRAM

DEVICE: MM-6702 MEMORY MODULE

BLDG #: 1002B
RACK #: R02B09
CHASSIS ID: CFE-2B-PS1
SLOT #: 2
A24 BASE ADDRESS: XXX

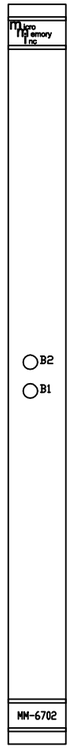

JUMPER LIST
1. REMOVE E1.
2. INSTALL E15.
3. SW3 CLOSE ALL POSITIONS.
4. SW2 CLOSE POSITIONS 7 AND 8.
5. SW1 CLOSE POSITIONS 2-8.
6. INSTALL E14 AND E25 TO ENABLE BATTERIES

DEVICE: V108 UTILITY MODULE

BLDG #: 1002B
RACK #: R02B09
CHASSIS ID: CFE-2B-PS1
SLOT #: 3
A24 BASE ADDRESS: 0XF0004000

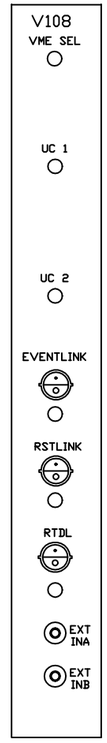

ASSY# 94028094

EVENT LINK

BLDG #: 1002B
RACK #: R02B10
FANOUT #: A

OUTPUT J8

RESET LINK

BLDG #: 1002B
RACK #: R02B10
FANOUT #: C

OUTPUT J8

REAL TIME DATA LINK

BLDG #: 1002B
RACK #: R02B10
FANOUT #: B

OUTPUT J8

ASSY# 94028176
LENGTH AS REQUIRED
(TYP 3 PLACES)

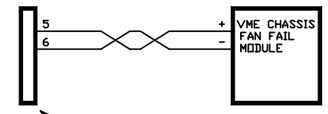

JUMPER LIST

E25 through E50 are configured for remote reset address at the time of board acceptance test.
DO NOT MODIFY!

Remote reset pulls VME SYS Reset.
E58-E60, E59-E61

A24 BASE ADDRESS= 4000h
E57-E13, E2-E14, E3-E15, E4-E16, E5-E17, E6-E18
E7-E19, E8-E20, E9-E21, E10-E22, E11-E24, E57-E23
SW1=OPEN
SW2=CLOSED
SW3=OPEN
SW4=OPEN

HIGH BAY ROOM TEMP SENSOR

POWER FROM EXTERNAL POWER SUPPLY
+24 V
GND

MADC MUX A/D IO PANEL
BLDG #: 1002B
RACK #: R02B09
PANEL #: MADC A/D IO PANEL H
FR SHEET 47
J14
CHAN 62
HIGH BAY TEMP

ROOM TEMP SENSOR

POWER FROM BUFFERED MADC POWER SUPPLY
+24 V
GND

MADC MUX A/D IO PANEL
BLDG #: 1002B
RACK #: R02B09
PANEL #: MADC A/D IO PANEL H
FR SHEET 11
J15
CHAN 63
CONTROL ROOM TEMP

-3	-2	-1	QTY REQD	REF DESIGNATOR	ITEM NO.	DESCRIPTION	MAT'L DWG NO./BNL NO.

INTERPRET IN GENERAL ACCORDANCE WITH ASME Y14.24M-1989
UNLESS OTHERWISE SPECIFIED DIMENSIONS ARE IN INCHES
DECIMAL TOLERANCES .X ±.030 .XX ±.015 .XXX ±.005
ANGULAR TOLERANCE ± .5°
OUTSTANDING ECN
NA
FINISH
BREAK SHARP EDGES
MAX. XX MIN. XX

Q.A. CATEGORY A-3		DATE	BROOKHAVEN NATIONAL LABORATORY, ASSOCIATED UNIVERSITIES, INC., UPTON, N.Y. 11973
DRAWN BY	Venegas	8/17/99	
CHECKED BY			RHIC CONTROLS WIRING DIAGRAM
DESIGN APPROVAL			ALCOVE 1002B, VME CHASSIS CFE-2B-PS1
ENGINEER APPROVAL	R. MICHNOFF	10/21/97	CPU/MEMORY /V108 UTIL MODULE
SUPVR. APPROVAL			94028539
NEXT ASSEMBLY			SIZE D, REV. A, DRAWING NUMBER
MATERIAL: ———	SCALE: NA	WEIGHT: –	SHEET 11

*AUTOCAD

REV.	ZONE	ECN NO.	DATE	BY	CKR	APP.

Controls, C-AD 6/11/2003 1:20 PM 8539_12.dwg

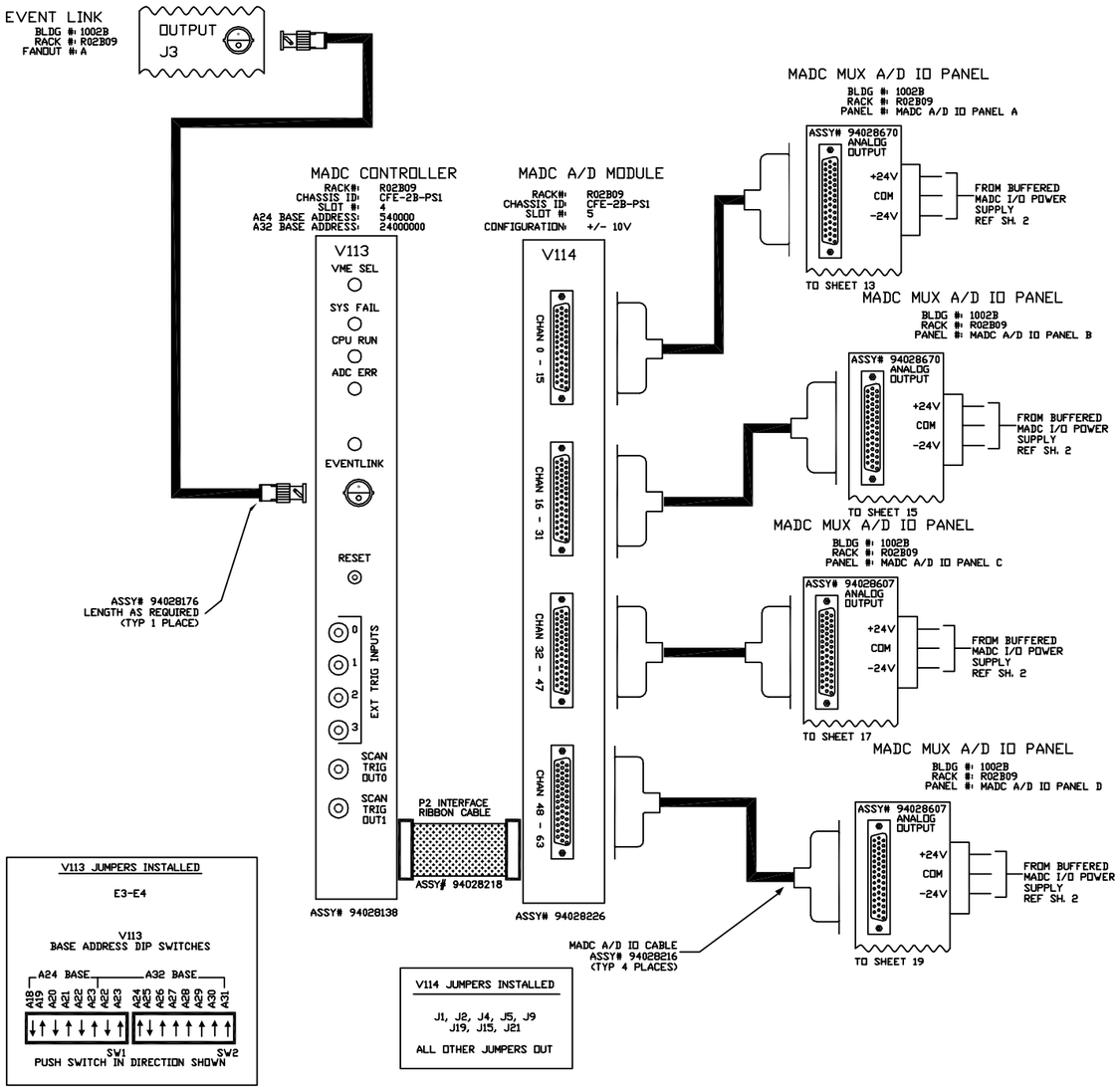

V113 JUMPERS INSTALLED

E3-E4

V113
BASE ADDRESS DIP SWITCHES

PUSH SWITCH IN DIRECTION SHOWN

V114 JUMPERS INSTALLED

J1, J2, J4, J5, J9
J19, J15, J21

ALL OTHER JUMPERS OUT

-3	-2	-1	QTY REQD	REF DESIGNATOR	ITEM NO.	DESCRIPTION	MAT'L DWG NO./PRL NO.

INTERPRET IN GENERAL ACCORDANCE WITH ASME Y14.24M-1989

UNLESS OTHERWISE SPECIFIED DIMENSIONS ARE IN INCHES

DECIMAL TOLERANCES
.X ±.030
.XX ±.015
.XXX ±.005
ANGULAR TOLERANCE ± .5°

NA FINISH

BREAK SHARP EDGES MAX. XX MIN. XX

OUTSTANDING ECN

Q.A. CATEGORY A-3		DATE
DRAWN BY	Ed Koropsak	6/3/98
CHECKED BY		
DESIGN APPROVAL		
ENGINEER APPROVAL	R. MICHNOFF	6/3/98
SUPVR. APPROVAL		

NEXT ASSEMBLY

BROOKHAVEN NATIONAL LABORATORY
UPTON, N.Y. 11973

RHIC CONTROLS WIRING DIAGRAM

1002B, VME CHASSIS CFE-2B-PS1

MADC SYSTEM

SIZE D | 94028539 | REV. A

DRAWING NUMBER

MATERIAL: ——— SCALE: FULL WEIGHT: — SHEET 12

*AUTOCAD

PDF created with FinePrint pdfFactory Pro trial version http://www.fineprint.com

REV.	ZONE	ECN NO.	DATE	BY	CKR	APP.

Controls, C-AD 6/12/2003 9:51 AM 8539_13.dwg

V115 WAVEFORM GENERATOR (A)
BLDG #: 1002B
RACK #: R02B09
CHASSIS ID: CFE-2B-PS1
SLOT #: 8
A24 BASE ADDRESS: 100000

T215-2
BLDG #: 1002B
RACK #: R02B09
CHASSIS ID: CFE-2B-PS1
SLOT #: 8
A24 BASE ADDRESS: N/A

V115
VME SEL
RESET
FAIL
RUN
EVENTLINK
RTDL
RCV A
XMT A
RCV B
XMT B

T215
POWER
EVENTLNK
RTDL
XMT_2A
XMT_2B
XMT_A
RCV_A
XMT_B
RCV_B

EVENT LINK
BLDG #: 1002B
RACK #: R02B09
FANOUT #: A
OUTPUT J15

RTDL
BLDG #: 1002B
RACK #: R02B09
FANOUT #: B
OUTPUT J15

ASSY# 94028176
LENGTH = 1 FT
(TYP 2 PLACES)

P2 INTERFACE RIBBON CABLE
ASSY# 94028159

ASSY# 94028108
ASSY# 94028441

ACS

62.5/125 MULTIMODE FIBER
(TYP 4 PLACES)

PWR SUPPLY bi1-tq4-ps
+/-100A @ +/-10V
BLDG#: 1002B
RACK#: R2BQT1

RX
TX

PWR SUPPLY INTERFACE
ASSY.# 94028652-3

LEMO TWO CONDUCTOR PLUG ASSEMBLY
(TYP 5 PLACES)

MADC MUX A/D IO PANEL
BLDG #: 1002B
RACK #: R02B09
PANEL #: MADC A/D IO PANEL A

FR SHEET12
J0 CHAN 0 POWER SUPPLY bi1-tq4-ps IREF
J1 CHAN 1 POWER SUPPLY bi1-tq4-ps CURRENT
J2 CHAN 2 POWER SUPPLY bi1-tq4-ps VOLTAGE
J3 CHAN 3 POWER SUPPLY bi1-tq4-ps ERROR
TO SHEET 13

FR SHEET 15
J14 CHAN 46 bi1-tq4-ps IGROUND

MADC MUX A/D IO PANEL
BLDG #: 1002B
RACK #: R02B09
PANEL #: MADC A/D IO PANEL G

PWR SUPPLY bi1-tq5-ps
+/-100A @ +/-10V
BLDG#: 1002B
RACK#: R2BQT1

RX
TX

PWR SUPPLY INTERFACE
ASSY.# 94028652-3

LEMO TWO CONDUCTOR PLUG ASSEMBLY
(TYP 5 PLACES)

MADC MUX A/D IO PANEL
BLDG #: 1002B
RACK #: R02B09
PANEL #: MADC A/D IO PANEL A

FR SHEET13
J4 CHAN 4 POWER SUPPLY bi1-tq5-ps IREF
J5 CHAN 5 POWER SUPPLY bi1-tq5-ps CURRENT
J6 CHAN 6 POWER SUPPLY bi1-tq5-ps VOLTAGE
J7 CHAN 7 POWER SUPPLY bi1-tq5-ps ERROR
TO SHEET 14

FR SHEET 13
J15 CHAN 47 bi1-tq5-ps IGROUND

MADC MUX A/D IO PANEL
BLDG #: 1002B
RACK #: R02B09
PANEL #: MADC A/D IO PANEL G

V115 JUMPER LIST

JP3=IN
JP4=IN
JP1=OUT
JP2=OUT

A24 BASE ADDRESS
JB1-A23=IN
JB1-A22=IN
JB1-A21=IN
JB1-A20=OUT
JB1-A19=IN
JB1-A18=IN

-3 -2 -1 QTY REQD	REF DESIGNATOR	ITEM NO.	DESCRIPTION	MAT'L SPEC NO./DWG NO./STK NO.

INTERPRET IN GENERAL ACCORDANCE WITH ASME Y14.24M-1989
UNLESS OTHERWISE SPECIFIED DIMENSIONS ARE IN INCHES
DECIMAL TOLERANCES .X ±.030 .XX ±.015 .XXX ±.005
ANGULAR TOLERANCE ± .5°
FINISH: NA
BREAK SHARP EDGES MAX. XX MIN. XX
OUTSTANDING ECN
NEXT ASSEMBLY

Q.A. CATEGORY A-3		DATE
DRAWN BY	Ed Koropsak	5/7/98
CHECKED BY		
DESIGN APPROVAL		
ENGINEER APPROVAL	R.MICHNOFF	5/7/98
SUPVR. APPROVAL		

BROOKHAVEN NATIONAL LABORATORY
UPTON, N.Y. 11973
RHIC CONTROLS WIRING DIAGRAM
BLDG. 1002B, CFE-2B-PS1
bi1-tq4-ps/bi1-tq5-ps

SIZE D | 94028539 | REV. A
DRAWING NUMBER
MATERIAL: ——— SCALE: NA WEIGHT: – SHEET 13 OF 52

PDF created with FinePrint pdfFactory Pro trial version http://www.fineprint.com

REV.	ZONE	ECN NO.	DATE	BY	CKR	APP.

Controls, C-AD 6/12/2003 10:40 AM 8539_14.dwg

V115 WAVEFORM GENERATOR (B)
BLDG #: 1002B
RACK #: R02B09
CHASSIS ID: CFE-2B-PS1
SLOT #: 9
A24 BASE ADDRESS: 140000

T215-2
BLDG #: 1002B
RACK #: R02B09
CHASSIS ID: CFE-2B-PS1
SLOT #: 9
A24 BASE ADDRESS: N/A

V115
VME SEL
RESET
FAIL
RUN
EVENTLINK
RTDL
RCV A
XMT A
RCV B
XMT B

T215
POWER
EVENTLNK
RTDL
XMT_2A
XMT_2B
XMT_A
RCV_A
XMT_B
RCV_B

ACS

EVENT LINK
BLDG #: 1002B
RACK #: R02B09
FANOUT #: A

OUTPUT J14

RTDL
BLDG #: 1002B
RACK #: R02B09
FANOUT #: B

OUTPUT J14

ASSY# 94028176
LENGTH = 1 FT
(TYP 2 PLACES)

P2 INTERFACE RIBBON CABLE
ASSY# 94028159

ASSY# 94028108

ASSY# 94028441

62.5/125 MULTIMODE FIBER (TYP 4 PLACES)

PWR SUPPLY bi1-tq6-ps
+/-100A @ +/-10V
BLDG#: 1002B
RACK#: R2BQT1

RX
TX

PWR SUPPLY INTERFACE
ASSY.# 94028652-3

LEMO TWO CONDUCTOR PLUG ASSEMBLY
(TYP 5 PLACES)

MADC MUX A/D IO PANEL
BLDG #: 1002B
RACK #: R02B09
PANEL #: MADC A/D IO PANEL A

FR SHEET13
J8 CHAN 8 POWER SUPPLY bi1-tq6-ps IREF
J9 CHAN 9 POWER SUPPLY bi1-tq6-ps CURRENT
J10 CHAN 10 POWER SUPPLY bi1-tq6-ps VOLTAGE
J11 CHAN 11 POWER SUPPLY bi1-tq6-ps ERROR
TO SHEET 14

FR SHEET 54
J0 CHAN 48 bi1-tq6-ps IGROUND

MADC MUX A/D IO PANEL
BLDG #: 1002B
RACK #: R02B09
PANEL #: MADC A/D IO PANEL H

PWR SUPPLY bo2-tq4-ps
+/-100A @ +/-10V
BLDG#: 1002B
RACK#: R2BQT2

RX
TX

PWR SUPPLY INTERFACE
ASSY.# 94028652-3

LEMO TWO CONDUCTOR PLUG ASSEMBLY
(TYP 5 PLACES)

MADC MUX A/D IO PANEL
BLDG #: 1002B
RACK #: R02B09
PANEL #: MADC A/D IO PANEL A

FR SHEET14
J12 CHAN 12 POWER SUPPLY bo2-tq4-ps IREF
J13 CHAN 13 POWER SUPPLY bo2-tq4-ps CURRENT
J14 CHAN 14 POWER SUPPLY bo2-tq4-ps VOLTAGE
J15 CHAN 15 POWER SUPPLY bo2-tq4-ps ERROR

FR SHEET SPARE
J11 CHAN 43 bo2-tq4-ps IGROUND

MADC MUX A/D IO PANEL
BLDG #: 1002B
RACK #: R02B09
PANEL #: MADC A/D IO PANEL G

V115 JUMPER LIST

JP3=IN
JP4=IN
JP1=OUT
JP2=OUT

A24 BASE ADDRESS
JB1-A23=IN
JB1-A22=IN
JB1-A21=IN
JB1-A20=OUT
JB1-A19=IN
JB1-A18=OUT

-3 QTY REQD	-2	-1	REF DESIGNATOR	ITEM NO.	DESCRIPTION	MAT'L DWG NO._DWG. NO.

INTERPRET IN GENERAL ACCORDANCE WITH ASME Y14.24M-1989
UNLESS OTHERWISE SPECIFIED DIMENSIONS ARE IN INCHES
DECIMAL TOLERANCES .X ±.030 .XX ±.015 .XXX ±.005
ANGULAR TOLERANCE ± .5°
OUTSTANDING ECN: NA
FINISH: √
BREAK SHARP EDGES MAX. XX MIN. XX

Q.A. CATEGORY A-3

DRAWN BY	Ed Koropsak	5/7/98
CHECKED BY		
DESIGN APPROVAL		
ENGINEER APPROVAL	R.MICHNOFF	5/7/98
SUPVR. APPROVAL		

NEXT ASSEMBLY

BROOKHAVEN NATIONAL LABORATORY
UPTON, N.Y. 11973
RHIC CONTROLS WIRING DIAGRAM
BLDG. 1002B, CFE-2B-PS1
bi1-tq6-ps/bo2-tq4-ps
SIZE D
94028539
REV. A
DRAWING NUMBER
MATERIAL: ——— SCALE: NA WEIGHT: – SHEET 14

*AUTOCAD

PDF created with FinePrint pdfFactory Pro trial version http://www.fineprint.com

REV.	ZONE	ECN NO.	DATE	BY	CKR	APP.

Controls, C-AD 6/12/2003 10:55 AM 8539_15.dwg

V115 WAVEFORM GENERATOR (C)
BLDG #: 1002B
RACK #: R02B09
CHASSIS ID: CFE-2B-PS1
SLOT #: 10
A24 BASE ADDRESS: 180000

T215-2
BLDG #: 1002B
RACK #: R02B09
CHASSIS ID: CFE-2B-PS1
SLOT #: 10
A24 BASE ADDRESS: N/A

V115
VME SEL
RESET
FAIL
RUN
EVENTLINK
RTDL
RCV A
XMT A
RCV B
XMT B

T215
POWER
EVENTLNK
RTDL
XMT_2A
XMT_2B
XMT_A
RCV_A
XMT_B
RCV_B

ACS

EVENT LINK
BLDG #: 1002B
RACK #: R02B09
FANOUT #: A

OUTPUT J13

RTDL
BLDG #: 1002B
RACK #: R02B09
FANOUT #: B

OUTPUT J13

ASSY# 94028176
LENGTH = 1 FT
(TYP 2 PLACES)

P2 INTERFACE RIBBON CABLE
ASSY# 94028159

ASSY# 94028108

ASSY# 94028441

62.5/125 MULTIMODE FIBER (TYP 4 PLACES)

PWR SUPPLY bo2-tq5-ps
+/-100A @ +/-10V
BLDG#: 1002B
RACK#: R2BQT2

RX
TX

PWR SUPPLY INTERFACE
ASSY.# 94028652-3

LEMO TWO CONDUCTOR PLUG ASSEMBLY (TYP 5 PLACES)

MADC MUX A/D IO PANEL
BLDG #: 1002B
RACK #: R02B09
PANEL #: MADC A/D IO PANEL B

FR SHEET 12
J0 CHAN 16 POWER SUPPLY bo2-tq5-ps IREF
J1 CHAN 17 POWER SUPPLY bo2-tq5-ps CURRENT
J2 CHAN 18 POWER SUPPLY bo2-tq5-ps VOLTAGE
J3 CHAN 19 POWER SUPPLY bo2-tq5-ps ERROR
TO SHEET 15

FR SHEET 14
J12 CHAN 44 bo2-tq5-ps IGROUND

MADC MUX A/D IO PANEL
BLDG #: 1002B
RACK #: R02B09
PANEL #: MADC A/D IO PANEL G

PWR SUPPLY bo2-tq6-ps
+/-100A @ +/-10V
BLDG#: 1002B
RACK#: R2BQT2

RX
TX

PWR SUPPLY INTERFACE
ASSY.# 94028652-3

LEMO TWO CONDUCTOR PLUG ASSEMBLY (TYP 5 PLACES)

MADC MUX A/D IO PANEL
BLDG #: 1002B
RACK #: R02B09
PANEL #: MADC A/D IO PANEL B

FR SHEET 15
J4 CHAN 20 POWER SUPPLY bo2-tq6-ps IREF
J5 CHAN 21 POWER SUPPLY bo2-tq6-ps CURRENT
J5 CHAN 22 POWER SUPPLY bo2-tq6-ps VOLTAGE
J7 CHAN 23 POWER SUPPLY bo2-tq6-ps ERROR
TO SHEET 16

FR SHEET 15
J13 CHAN 45 bo2-tq6-ps IGROUND

MADC MUX A/D IO PANEL
BLDG #: 1002B
RACK #: R02B09
PANEL #: MADC A/D IO PANEL G

V115 JUMPER LIST

JP3=IN JP4=IN JP1=OUT JP2=OUT
A24 BASE ADDRESS JB1-A23=IN JB1-A22=IN JB1-A21=IN JB1-A20=OUT JB1-A19=OUT JB1-A18=IN

-3	-2	-1	REF DESIGNATOR	ITEM NO.	DESCRIPTION	MAT'L DWG NO./BNL NO.
QTY REQD						

INTERPRET IN GENERAL ACCORDANCE WITH ASME Y14.24M-1989
UNLESS OTHERWISE SPECIFIED DIMENSIONS ARE IN INCHES
DECIMAL TOLERANCES .X ±.030 .XX ±.015 .XXX ±.005
ANGULAR TOLERANCE ± .5°
FINISH NA
BREAK SHARP EDGES MAX. XX MIN. XX
OUTSTANDING ECN
NEXT ASSEMBLY

Q.A. CATEGORY A-3

		DATE
DRAWN BY	Ed Koropsak	5/11/98
CHECKED BY		
DESIGN APPROVAL		
ENGINEER APPROVAL	R.MICHNOFF	5/11/98
SUPVR. APPROVAL		

BROOKHAVEN NATIONAL LABORATORY
UPTON, N.Y. 11973
RHIC CONTROLS WIRING DIAGRAM
BLDG. 1002B, CFE-2B-PS1
bo2-tq5-ps/bo2-tq6-ps

SIZE D | 94028539 | REV. A
DRAWING NUMBER
MATERIAL: —— SCALE: NA WEIGHT: — SHEET 15

*AUTOCAD

PDF created with FinePrint pdfFactory Pro trial version http://www.fineprint.com

REV.	ZONE	ECN NO.	DATE	BY	CKR	APP.

Controls 8/17/99 11:26 AM 8539_16.dwg

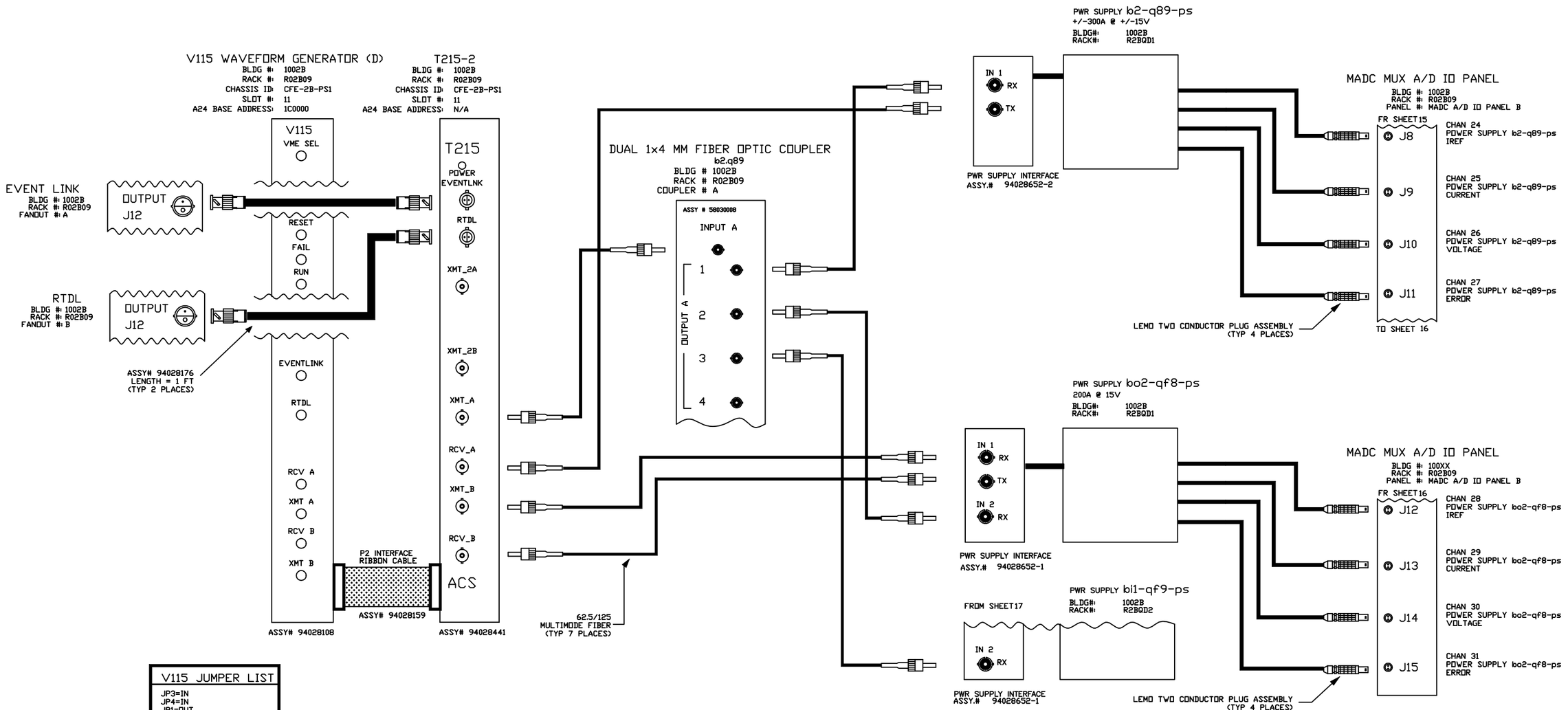

V115 JUMPER LIST
JP3=IN JP4=IN JP1=OUT JP2=OUT
A24 BASE ADDRESS JB1-A23=IN JB1-A22=IN JB1-A21=IN JB1-A20=OUT JB1-A19=OUT JB1-A18=OUT

-3	-2	-1	QTY REQD	REF DESIGNATOR	ITEM NO.	DESCRIPTION	MAT'L DWG NO./BNL NO.

INTERPRET IN GENERAL ACCORDANCE WITH ASME Y14.24M-1989

UNLESS OTHERWISE SPECIFIED DIMENSIONS ARE IN INCHES

DECIMAL TOLERANCES
.X ±.030
.XX ±.015
.XXX ±.005
ANGULAR TOLERANCE
± .5°

NA FINISH

BREAK SHARP EDGES
MAX. XX MIN. XX

OUTSTANDING ECN

Q.A. CATEGORY	A-3	DATE
DRAWN BY	Ed Koropsak	5/11/98
CHECKED BY		
DESIGN APPROVAL		
ENGINEER APPROVAL	R.MICHNOFF	5/11/98
SUPVR. APPROVAL		

NEXT ASSEMBLY

BROOKHAVEN NATIONAL LABORATORY
UPTON, N.Y. 11973

RHIC CONTROLS WIRING DIAGRAM
BLDG. 1002B, CFE-2B-PS1
b2-q89-ps/bo2-qf8-ps

SIZE D
94028539
REV. A
DRAWING NUMBER

MATERIAL: ——— SCALE: NA WEIGHT: — SHEET 16 OF 52

*AUTOCAD

REV.	ZONE	ECN NO.	DATE	BY	CKR	APP.

Controls 8/17/99 11:28 AM 8539_17.dwg

V115 WAVEFORM GENERATOR (E)

BLDG #: 1002B
RACK #: R02B09
CHASSIS ID: CFE-2B-PS1
SLOT #: 12
A24 BASE ADDRESS: 200000

T215-2

BLDG #: 1002B
RACK #: R02B09
CHASSIS ID: CFE-2B-PS1
SLOT #: 12
A24 BASE ADDRESS: N/A

V115
VME SEL
RESET
FAIL
RUN
EVENTLINK
RTDL
RCV A
XMT A
RCV B
XMT B

ASSY# 94028108

T215
POWER
EVENTLNK
RTDL
XMT_2A
XMT_2B
XMT_A
RCV_A
XMT_B
RCV_B
ACS

ASSY# 94028441

EVENT LINK
BLDG #: 1002B
RACK #: R02B09
FANOUT #: A

RTDL
BLDG #: 1002B
RACK #: R02B09
FANOUT #: B

OUTPUT J11

ASSY# 94028176
LENGTH = 1 FT
(TYP 2 PLACES)

P2 INTERFACE RIBBON CABLE

ASSY# 94028159

62.5/125 MULTIMODE FIBER (TYP 4 PLACES)

PWR SUPPLY b1l-qf9-ps
200A @ 15V
BLDG#: 1002B
RACK#: R2B0D2

IN 1
RX
TX

PWR SUPPLY INTERFACE
ASSY.# 94028652-1

TO SHEET 16

MADC MUX A/D ID PANEL

BLDG #: 1002B
RACK #: R02B09
PANEL #: MADC A/D ID PANEL C

FR SHEET12

J0 CHAN 32 POWER SUPPLY b1l-qf9-ps IREF
J1 CHAN 33 POWER SUPPLY b1l-qf9-ps CURRENT
J2 CHAN 34 POWER SUPPLY b1l-qf9-ps VOLTAGE
J3 CHAN 35 POWER SUPPLY b1l-qf9-ps ERROR

TO SHEET 17

LEMO TWO CONDUCTOR PLUG ASSEMBLY (TYP 4 PLACES)

PWR SUPPLY b2-dhx-ps
2000A @ 20V
BLDG#: 1002B
RACK#: R2BD2

IN 1
RX
TX

PWR SUPPLY INTERFACE
ASSY.# 94028652-1

TO SHEET 18

MADC MUX A/D ID PANEL

BLDG #: 1002B
RACK #: R02B09
PANEL #: MADC A/D ID PANEL C

FR SHEET17

J4 CHAN 36 POWER SUPPLY b2-dhx-ps IREF
J5 CHAN 37 POWER SUPPLY b2-dhx-ps CURRENT
J6 CHAN 38 POWER SUPPLY b2-dhx-ps VOLTAGE
J7 CHAN 39 POWER SUPPLY b2-dhx-ps ERROR

TO SHEET 18

LEMO TWO CONDUCTOR PLUG ASSEMBLY (TYP 4 PLACES)

V115 JUMPER LIST

JP3=IN
JP4=IN
JP1=OUT
JP2=OUT

A24 BASE ADDRESS
JB1-A23=IN
JB1-A22=IN
JB1-A21=OUT
JB1-A20=IN
JB1-A19=IN
JB1-A18=IN

-3	-2	-1 QTY REQD	REF DESIGNATOR	ITEM NO.	DESCRIPTION	MAT'L DWG NO./BNL NO.

INTERPRET IN GENERAL ACCORDANCE WITH ASME Y14.24M-1989
UNLESS OTHERWISE SPECIFIED DIMENSIONS ARE IN INCHES
DECIMAL TOLERANCES .X ±.030 .XX ±.015 .XXX ±.005
ANGULAR TOLERANCE ± .5°
FINISH: NA
BREAK SHARP EDGES MAX. XX MIN. XX
OUTSTANDING ECN

Q.A. CATEGORY A-3

DRAWN BY	Ed Koropsak	5/11/98
CHECKED BY		
DESIGN APPROVAL		
ENGINEER APPROVAL	R.MICHNOFF	5/11/98
SUPVR. APPROVAL		

NEXT ASSEMBLY

BROOKHAVEN NATIONAL LABORATORY
UPTON, N.Y. 11973

RHIC CONTROLS WIRING DIAGRAM
BLDG. 1002B, CFE-2B-PS1
bi1-qf9-ps/b2-dhx-ps

SIZE D | 94028539 | REV. A
DRAWING NUMBER
MATERIAL: ——— SCALE: NA WEIGHT: – SHEET 17 OF 52

*AUTOCAD

REV.	ZONE	ECN NO.	DATE	BY	CKR	APP.

Controls 8/17/99 11:31 AM 8539_18.dwg

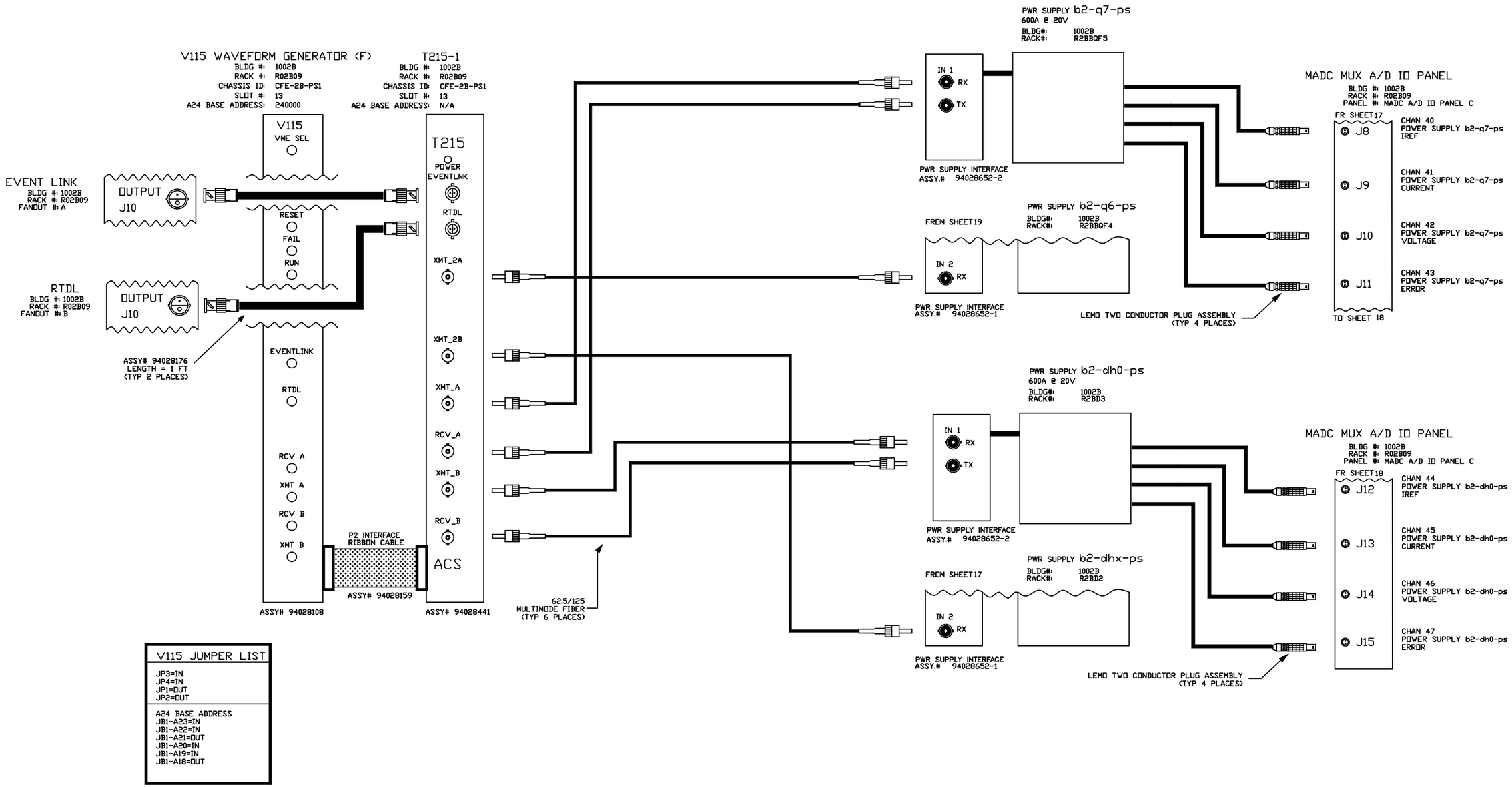

V115 JUMPER LIST
JP3=IN JP4=IN JP1=OUT JP2=OUT
A24 BASE ADDRESS JB1-A23=IN JB1-A22=IN JB1-A21=OUT JB1-A20=IN JB1-A19=IN JB1-A18=OUT

-3	-2	-1 QTY REQD	REF DESIGNATOR	ITEM NO.	DESCRIPTION	MAT'L DWG NO./BNL NO.

INTERPRET IN GENERAL ACCORDANCE WITH ASME Y14.24M-1989

UNLESS OTHERWISE SPECIFIED DIMENSIONS ARE IN INCHES

DECIMAL TOLERANCES
.X ±.030
.XX ±.015
.XXX ±.005
ANGULAR TOLERANCE ± .5°

FINISH: NA

BREAK SHARP EDGES MAX. XX MIN. XX

OUTSTANDING ECN

Q.A. CATEGORY A-3		DATE
DRAWN BY	Ed Koropsak	5/11/98
CHECKED BY		
DESIGN APPROVAL		
ENGINEER APPROVAL	R.MICHNOFF	5/11/98
SUPVR. APPROVAL		
NEXT ASSEMBLY		

BROOKHAVEN NATIONAL LABORATORY
UPTON, N.Y. 11973

RHIC CONTROLS WIRING DIAGRAM

BLDG. 1002B, CFE-2B-PS1

b2-q7-ps/b2-dh0-ps

SIZE D | 94028539 DRAWING NUMBER | REV. A

MATERIAL: ——— SCALE: NA WEIGHT: – SHEET 18 OF 52

*AUTOCAD

REV.	ZONE	ECN NO.	DATE	BY	CKR	APP.

Controls 8/17/99 11:32 AM 8539_19.dwg

V115 WAVEFORM GENERATOR (G)
BLDG #: 1002B
RACK #: R02B09
CHASSIS ID: CFE-2B-PS1
SLOT #: 14
A24 BASE ADDRESS: 280000

T215-2
BLDG #: 1002B
RACK #: R02B09
CHASSIS ID: CFE-2B-PS1
SLOT #: 14
A24 BASE ADDRESS: N/A

EVENT LINK
BLDG #: 1002B
RACK #: R02B09
FANOUT #: A

RTDL
BLDG #: 1002B
RACK #: R02B09
FANOUT #: B

OUTPUT J9

ASSY# 94028176
LENGTH = 1 FT
(TYP 2 PLACES)

V115
VME SEL
RESET
FAIL
RUN
EVENTLINK
RTDL
RCV A
XMT A
RCV B
XMT B

T215
POWER
EVENTLNK
RTDL
XMT_2A
XMT_2B
XMT_A
RCV_A
XMT_B
RCV_B

P2 INTERFACE RIBBON CABLE
ASSY# 94028159

ACS

ASSY# 94028108
ASSY# 94028441

V115 JUMPER LIST

JP3=IN
JP4=IN
JP1=OUT
JP2=OUT

A24 BASE ADDRESS
JB1-A23=IN
JB1-A22=IN
JB1-A21=OUT
JB1-A20=IN
JB1-A19=OUT
JB1-A18=IN

62.5/125
MULTIMODE FIBER
(TYP 3 PLACES)

DUAL 1x4 MM FIBER OPTIC COUPLER
b2.q6.i
BLDG # 1002B
RACK # R02B09
COUPLER # A
ASSY # 58030008
INPUT B
OUTPUT B
1
2
3
4
TO b11-qf3-ps
REF SHEET 21
TO bo2-qd3-ps
REF SHEET 22

PWR SUPPLY b2-q6-ps
450A @ 15V
BLDG#: 1002B
RACK#: R2BBQF4

IN 1
RX
TX

PWR SUPPLY INTERFACE
ASSY.# 94028652-1

TO SHEET 18

MADC MUX A/D IO PANEL
BLDG #: 1002B
RACK #: R02B09
PANEL #: MADC A/D IO PANEL D
FR SHEET 19
J4 CHAN 52 POWER SUPPLY b2-q6-ps IREF
J5 CHAN 53 POWER SUPPLY b2-q6-ps CURRENT
J6 CHAN 54 POWER SUPPLY b2-q6-ps VOLTAGE
J7 CHAN 55 POWER SUPPLY b2-q6-ps ERROR
TO SHEET 20

LEMO TWO CONDUCTOR PLUG ASSEMBLY
(TYP 4 PLACES)

MADC MUX A/D IO PANEL
BLDG #: 1002B
RACK #: R02B09
PANEL #: MADC A/D IO PANEL D
FR SHEET 12
J0 CHAN 48 POWER SUPPLY IREF
J1 CHAN 49 POWER SUPPLY CURRENT
J2 CHAN 50 POWER SUPPLY VOLTAGE
J3 CHAN 51 POWER SUPPLY ERROR
TO SHEET 19

-3	-2	-1 QTY REQD	REF DESIGNATOR	ITEM NO.	DESCRIPTION	MAT'L DWG NO./BNL NO.

INTERPRET IN GENERAL ACCORDANCE WITH ASME Y14.24M-1989
UNLESS OTHERWISE SPECIFIED DIMENSIONS ARE IN INCHES
DECIMAL TOLERANCES
X ±.030
.XX ±.015
.XXX ±.005
ANGULAR TOLERANCE ± .5°
NA FINISH
BREAK SHARP EDGES MAX. XX MIN. XX
OUTSTANDING ECN

Q.A. CATEGORY A-3		DATE
DRAWN BY	Ed Koropsak	5/11/98
CHECKED BY		
DESIGN APPROVAL		
ENGINEER APPROVAL	R.MICHNOFF	5/11/98
SUPVR. APPROVAL		
NEXT ASSEMBLY		

BROOKHAVEN NATIONAL LABORATORY
UPTON, N.Y. 11973
RHIC CONTROLS WIRING DIAGRAM
BLDG. 1002B, CFE-2B-PS1
b2-q6-ps

SIZE D | 94028539 | REV. A
DRAWING NUMBER
MATERIAL: ——— SCALE: NA WEIGHT: — SHEET 19 OF 52

*AUTOCAD

REV.	ZONE	ECN NO.	DATE	BY	CKR	APP.

Controls, C-AD 6/12/2003 11:02 AM 8539_20.dwg

MADC MUX A/D IO PANEL

BLDG #: 1002B
RACK #: R02B09
PANEL #: MADC A/D IO PANEL D

FR SHEET 19

J8	CHAN 56 POWER SUPPLY IREF
J9	CHAN 57 POWER SUPPLY CURRENT
J10	CHAN 58 POWER SUPPLY VOLTAGE
J11	CHAN 59 POWER SUPPLY ERROR

TO SHEET 20

MADC MUX A/D IO PANEL

BLDG #: 1002B
RACK #: R02B09
PANEL #: MADC A/D IO PANEL D

FR SHEET 20

J12	CHAN 60 POWER SUPPLY IREF
J13	CHAN 61 POWER SUPPLY CURRENT
J14	CHAN 62 POWER SUPPLY VOLTAGE
J15	CHAN 63 POWER SUPPLY ERROR

-3	-2	-1	QTY REQD	REF DESIGNATOR	ITEM NO.	DESCRIPTION	MAT'L DWG NO./PRL NO.

INTERPRET IN GENERAL ACCORDANCE WITH ASME Y14.24M–1989

UNLESS OTHERWISE SPECIFIED DIMENSIONS ARE IN INCHES

DECIMAL TOLERANCES
.X ±.030
.XX ±.015
.XXX ±.005
ANGULAR TOLERANCE
± .5°

NA FINISH

BREAK SHARP EDGES
MAX. XX MIN. XX

OUTSTANDING ECN

Q.A. CATEGORY A–3		DATE
DRAWN BY	Ed Koropsak	5/11/98
CHECKED BY		
DESIGN APPROVAL		
ENGINEER APPROVAL	R.MICHNOFF	5/11/98
SUPVR. APPROVAL		

NEXT ASSEMBLY

BROOKHAVEN NATIONAL LABORATORY
UPTON, N.Y. 11973

RHIC CONTROLS WIRING DIAGRAM

BLDG. 1002B, CFE–2B–PS1

SPARE MADC

SIZE D | 94028539 | REV. A

DRAWING NUMBER

MATERIAL: ——— SCALE: NA WEIGHT: – SHEET 20

*AUTOCAD

PDF created with FinePrint pdfFactory Pro trial version http://www.fineprint.com

REV.	ZONE	ECN NO.	DATE	BY	CKR	APP.

Controls, C-AD 6/30/2003 11:27 AM 8539_21.dwg

BLANK PAGE

-3	-2	-1	REF DESIGNATOR	ITEM NO.	DESCRIPTION	MAT'L DWG NO./DWG NO.
QTY REQD						

INTERPRET IN GENERAL ACCORDANCE WITH ASME Y14.24M-1989

UNLESS OTHERWISE SPECIFIED DIMENSIONS ARE IN INCHES

DECIMAL TOLERANCES
.X ±.030
.XX ±.015
.XXX ±.005
ANGULAR TOLERANCE ± .5°

NA FINISH

BREAK SHARP EDGES MAX. XX MIN. XX

OUTSTANDING ECN

Q.A. CATEGORY A-3		DATE
DRAWN BY	Ed Koropsak	5/11/98
CHECKED BY		
DESIGN APPROVAL		
ENGINEER APPROVAL	R.MICHNOFF	5/11/98
SUPVR. APPROVAL		

NEXT ASSEMBLY

BROOKHAVEN NATIONAL LABORATORY
UPTON, N.Y. 11973

RHIC CONTROLS WIRING DIAGRAM
BLDG. 1002B, CFE-2B-PS1
BLANK

SIZE D | 94028539 DRAWING NUMBER | REV. A

MATERIAL: ——— SCALE: NA WEIGHT: – SHEET 21

*AUTOCAD

PDF created with FinePrint pdfFactory Pro trial version http://www.fineprint.com

REV.	ZONE	ECN NO.	DATE	BY	CKR	APP.

Controls, C-AD 6/30/2003 11:30 AM 8539_22.dwg

BLANK PAGE

QTY REQD	REF DESIGNATOR	ITEM NO.	DESCRIPTION	MAT'L SPEC NO./DWG NO.

INTERPRET IN GENERAL ACCORDANCE WITH ASME Y14.24M-1989

UNLESS OTHERWISE SPECIFIED DIMENSIONS ARE IN INCHES

DECIMAL TOLERANCES
.X ±.030
.XX ±.015
.XXX ±.005
ANGULAR TOLERANCE ± .5°

NA FINISH

BREAK SHARP EDGES MAX. XX MIN. XX

OUTSTANDING ECN

Q.A. CATEGORY A-3		DATE
DRAWN BY	Ed Koropsak	5/11/98
CHECKED BY		
DESIGN APPROVAL		
ENGINEER APPROVAL	R.MICHNOFF	5/11/98
SUPVR. APPROVAL		

NEXT ASSEMBLY

BROOKHAVEN NATIONAL LABORATORY
UPTON, N.Y. 11973

RHIC CONTROLS WIRING DIAGRAM
BLDG. 1002B, CFE-2B-PS1
BLANK

SIZE D | 94028539 | REV. A

DRAWING NUMBER

MATERIAL: ——— SCALE: NA WEIGHT: – SHEET 22

*AUTOCAD

PDF created with FinePrint pdfFactory Pro trial version http://www.fineprint.com

Controls, C-AD 6/13/2003 2:38 PM 8539_28.dwg

REV.	ZONE	ECN NO.	DATE	BY	CKR	APP.

FRONT END COMPUTER
BLDG #: 1002B
RACK #: R02B08
CHASSIS ID: CFE-2B-PS2
SLOT #: 1
FEC NAME: cfe-2B-ps2

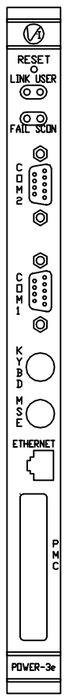

ETHERNET NETWORK

REF. NETWORK DIAGRAM

MM-6702 MEMORY MODULE
BLDG #: 1002B
RACK #: R02B08
CHASSIS ID: CFE-2B-PS2
SLOT #: 2
A32 BASE ADDRESS: 0x01000000

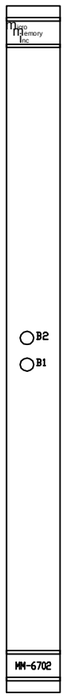

JUMPER LIST
1. REMOVE E1.
2. INSTALL E15.
3. SW3 CLOSE ALL POSITIONS.
4. SW2 CLOSE POSITIONS 7 AND 8.
5. SW1 CLOSE POSITIONS 2-8.
6. INSTALL E14 AND E25 TO ENABLE BATTERIES

EVENT LINK
BLDG #: 1002B
RACK #: R02B10
FANOUT #: A

RESET LINK
BLDG #: 1002B
RACK #: R02B10
FANOUT #: C

REAL TIME DATA LINK
BLDG #: 1002B
RACK #: R02B10
FANOUT #: B

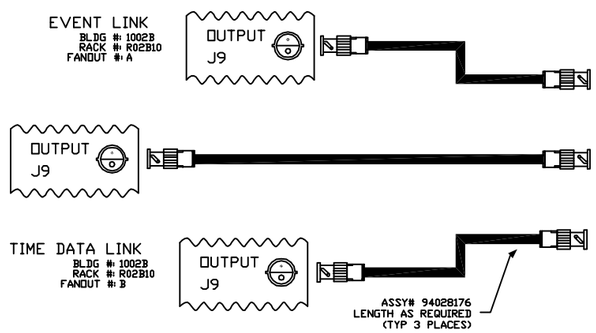

ASSY# 94028176
LENGTH AS REQUIRED
(TYP 3 PLACES)

JUMPER LIST

E25 through E50 are configured for remote reset address at the time of board acceptance test.
DO NOT MODIFY!

Remote reset pulls VME SYS Reset.
E58-E60, E59-E61

A24 BASE ADDRESS= 4000h
E57-E13, E2-E14, E3-E15, E4-E16, E5-E17, E6-E18
E7-E19, E8-E20, E9-E21, E10-E22, E11-E24, E57-E23
SW1=OPEN
SW2=CLOSED
SW3=OPEN
SW4=OPEN

DEVICE: V108 UTILITY MODULE
BLDG #: 1002B
RACK #: R02B08
CHASSIS ID: CFE-2B-PS2
SLOT #: 3
A24 BASE ADDRESS: 0XF0004000

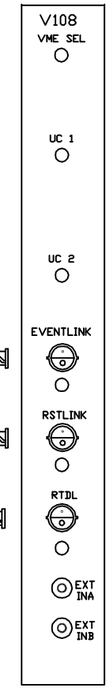

ASSY# 94028094

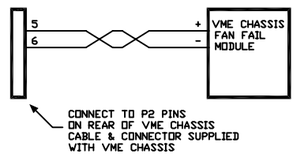

-3	-2	-1	REF DESIGNATOR	ITEM NO.	DESCRIPTION	MAT'L DWG NO./BNL NO.
QTY REQD						

INTERPRET IN GENERAL ACCORDANCE WITH ASME Y14.24M-1989
UNLESS OTHERWISE SPECIFIED DIMENSIONS ARE IN INCHES
DECIMAL TOLERANCES .X ±.030 .XX ±.015 .XXX ±.005
ANGULAR TOLERANCE ± .5°
OUTSTANDING ECN: NA
FINISH
BREAK SHARP EDGES MAX. XX MIN. XX

Q.A. CATEGORY A-3		DATE	BROOKHAVEN NATIONAL LABORATORY
DRAWN BY	Venegas	8/17/99	UPTON, N.Y. 11973
CHECKED BY			RHIC CONTROLS WIRING DIAGRAM
DESIGN APPROVAL			ALCOVE 1002B, VME CHASSIS CFE-2B-PS2
ENGINEER APPROVAL	R. MICHNOFF	10/21/97	CPU/MEMORY /V108 UTIL MODULE
SUPVR. APPROVAL			SIZE D — 94028539 — REV. A
NEXT ASSEMBLY			DRAWING NUMBER

MATERIAL: —— SCALE: NA WEIGHT: — SHEET 28

*AUTOCAD

PDF created with FinePrint pdfFactory Pro trial version http://www.fineprint.com

REV.	ZONE	ECN NO.	DATE	BY	CKR	APP.

Controls 8/17/99 1:10 PM 8539_29.dwg

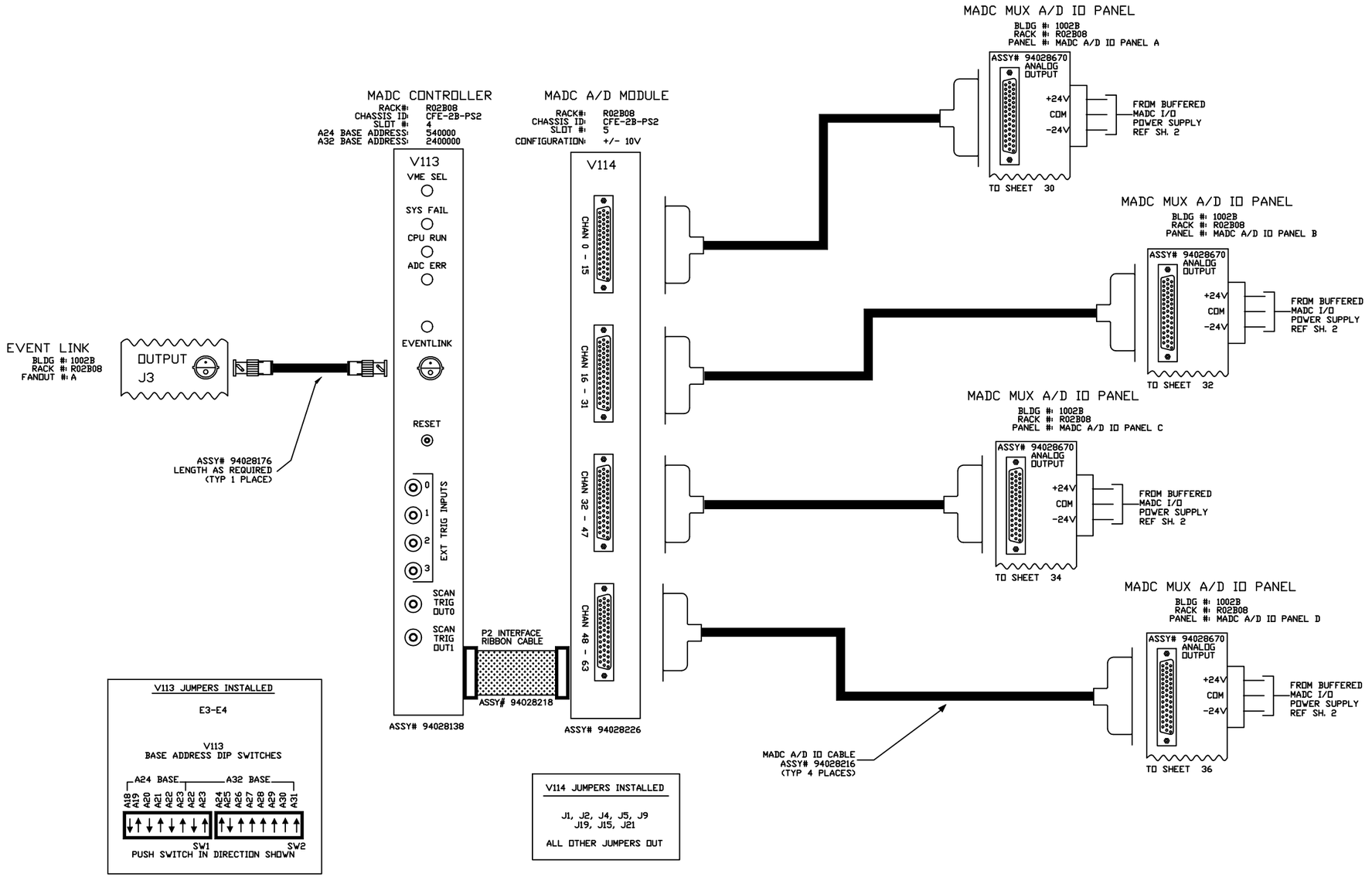

V113 JUMPERS INSTALLED

E3-E4

V113
BASE ADDRESS DIP SWITCHES

PUSH SWITCH IN DIRECTION SHOWN

V114 JUMPERS INSTALLED

J1, J2, J4, J5, J9
J19, J15, J21

ALL OTHER JUMPERS OUT

-3	-2	-1	QTY REQD	REF DESIGNATOR	ITEM NO.	DESCRIPTION	MAT'L DWG NO./BNL NO.

INTERPRET IN GENERAL ACCORDANCE WITH ASME Y14.24M-1989

UNLESS OTHERWISE SPECIFIED DIMENSIONS ARE IN INCHES

DECIMAL TOLERANCES
.X ±.030
.XX ±.015
.XXX ±.005
ANGULAR TOLERANCE
± .5°

NA FINISH

BREAK SHARP EDGES
MAX. XX MIN. XX

OUTSTANDING ECN

Q.A. CATEGORY	A-3	DATE	
DRAWN BY	Ed Koropsak	2/12/98	
CHECKED BY			
DESIGN APPROVAL			
ENGINEER APPROVAL	R. MICHNOFF	2/12/98	
SUPVR. APPROVAL			

NEXT ASSEMBLY

BROOKHAVEN NATIONAL LABORATORY
UPTON, N.Y. 11973

RHIC CONTROLS WIRING DIAGRAM
1002B, VME CHASSIS CFE-2B-PS2
MADC SYSTEM

SIZE D
94028539
REV. A
DRAWING NUMBER

MATERIAL: ——— SCALE: NA WEIGHT: – SHEET 29 OF 52

*AUTOCAD

REV.	ZONE	ECN NO.	DATE	BY	CKR	APP.

Controls, C-AD 6/13/2003 4:01 PM 8539_30.dwg

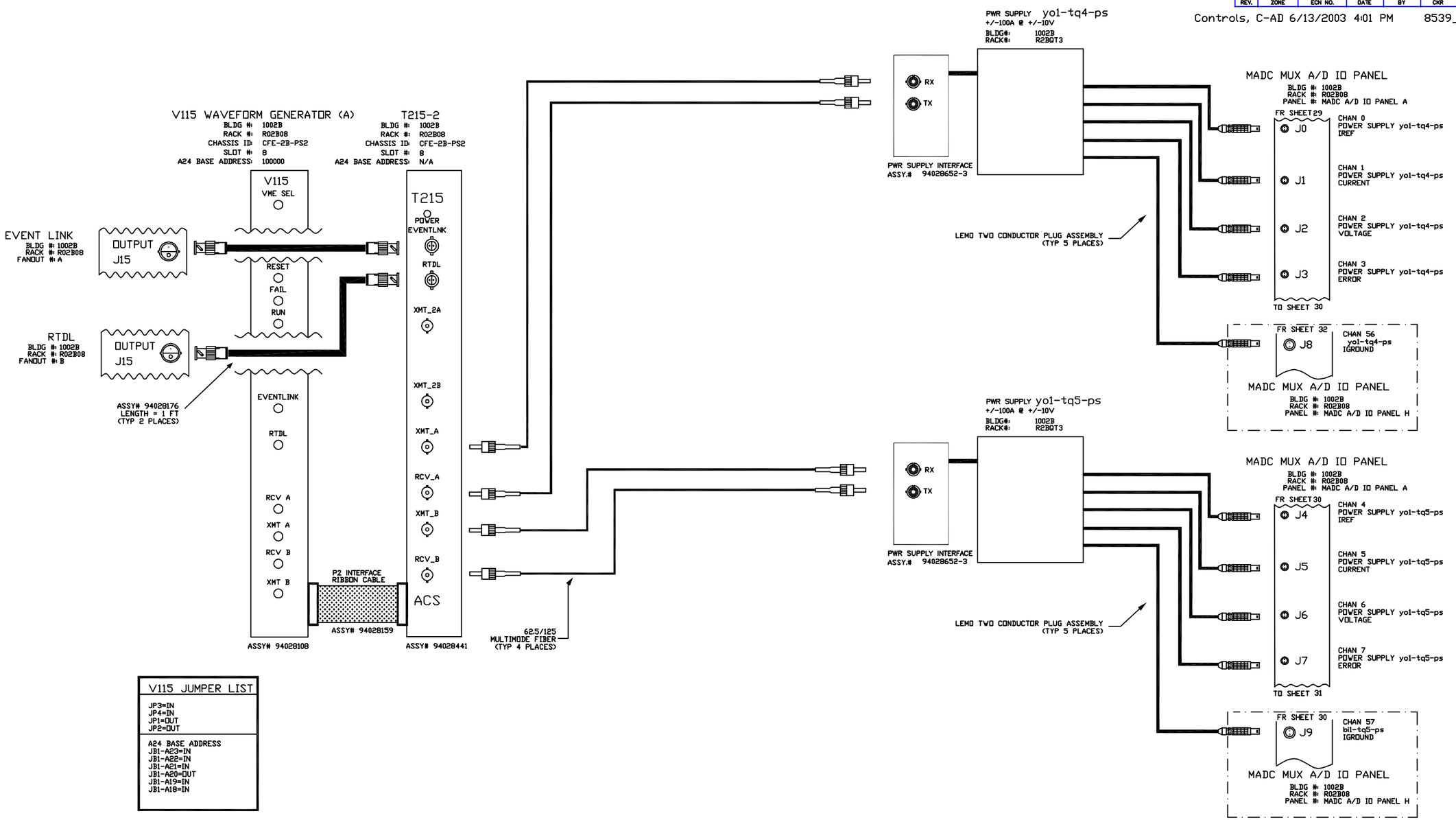

V115 JUMPER LIST
JP3=IN JP4=IN JP1=OUT JP2=OUT
A24 BASE ADDRESS JB1-A23=IN JB1-A22=IN JB1-A21=IN JB1-A20=OUT JB1-A19=IN JB1-A18=IN

-3	-2	-1	REF DESIGNATOR	ITEM NO.	DESCRIPTION	MAT'L DWG NO./DWG. NO.
QTY REQD						

INTERPRET IN GENERAL ACCORDANCE WITH ASME Y14.24M-1989

UNLESS OTHERWISE SPECIFIED DIMENSIONS ARE IN INCHES

DECIMAL TOLERANCES
.X ±.030
.XX ±.015
.XXX ±.005
ANGULAR TOLERANCE
± .5°

OUTSTANDING ECN

NA
FINISH

BREAK SHARP EDGES
MAX. XX MIN. XX

Q.A. CATEGORY A-3		DATE
DRAWN BY	Ed Koropsak	5/20/98
CHECKED BY		
DESIGN APPROVAL		
ENGINEER APPROVAL	R.MICHNOFF	5/20/98
SUPVR. APPROVAL		

NEXT ASSEMBLY

BROOKHAVEN NATIONAL LABORATORY
UPTON, N.Y. 11973

RHIC CONTROLS WIRING DIAGRAM

BLDG. 1002B, CFE-2B-PS2

yo1-tq4-ps/yo1-tq5-ps

SIZE D — 94028539 — REV. A

DRAWING NUMBER

MATERIAL: —— SCALE: NA WEIGHT: — SHEET 30

*AUTOCAD

PDF created with FinePrint pdfFactory Pro trial version http://www.fineprint.com

REV.	ZONE	ECN NO.	DATE	BY	CKR	APP.

Controls, C-AD 6/13/2003 3:32 PM 8539_31.dwg

V115 WAVEFORM GENERATOR (B)

BLDG #: 1002B
RACK #: R02B08
CHASSIS ID: CFE-2B-PS2
SLOT #: 9
A24 BASE ADDRESS: 140000

V115
VME SEL
RESET
FAIL
RUN
EVENTLINK
RTDL
RCV A
XMT A
RCV B
XMT B

ASSY# 94028108

T215-2

BLDG #: 1002B
RACK #: R02B08
CHASSIS ID: CFE-2B-PS2
SLOT #: 9
A24 BASE ADDRESS: N/A

T215
POWER
EVENTLNK
RTDL
XMT_2A
XMT_2B
XMT_A
RCV_A
XMT_B
RCV_B
ACS

ASSY# 94028441

P2 INTERFACE RIBBON CABLE
ASSY# 94028159

EVENT LINK
BLDG #: 1002B
RACK #: R02B08
FANOUT #: A

OUTPUT J14

RTDL
BLDG #: 1002B
RACK #: R02B08
FANOUT #: B

OUTPUT J14

ASSY# 94028176
LENGTH = 1 FT
(TYP 2 PLACES)

62.5/125 MULTIMODE FIBER (TYP 4 PLACES)

V115 JUMPER LIST

JP3=IN
JP4=IN
JP1=OUT
JP2=OUT

A24 BASE ADDRESS
JB1-A23=IN
JB1-A22=IN
JB1-A21=IN
JB1-A20=OUT
JB1-A19=IN
JB1-A18=OUT

PWR SUPPLY yo1-tq6-ps
+/-100A @ +/-10V
BLDG#: 1002B
RACK#: R2BQT3

RX
TX

PWR SUPPLY INTERFACE
ASSY.# 94028652-3

LEMO TWO CONDUCTOR PLUG ASSEMBLY (TYP 5 PLACES)

MADC MUX A/D IO PANEL
BLDG #: 1002B
RACK #: R02B08
PANEL #: MADC A/D IO PANEL A

FR SHEET29
J8 CHAN 8 POWER SUPPLY yo1-tq6-ps IREF
J9 CHAN 9 POWER SUPPLY yo1-tq6-ps CURRENT
J10 CHAN 10 POWER SUPPLY yo1-tq6-ps VOLTAGE
J11 CHAN 11 POWER SUPPLY yo1-tq6-ps ERROR
TO SHEET 31

FR SHEET 30
J10 CHAN 58 yo1-tq6-ps IGROUND

MADC MUX A/D IO PANEL
BLDG #: 1002B
RACK #: R02B08
PANEL #: MADC A/D IO PANEL H

PWR SUPPLY yi2-tq4-ps
+/-100A @ +/-10V
BLDG#: 1002B
RACK#: R2BQT4

RX
TX

PWR SUPPLY INTERFACE
ASSY.# 94028652-3

LEMO TWO CONDUCTOR PLUG ASSEMBLY (TYP 5 PLACES)

MADC MUX A/D IO PANEL
BLDG #: 1002B
RACK #: R02B08
PANEL #: MADC A/D IO PANEL A

FR SHEET31
J12 CHAN 12 POWER SUPPLY yi2-tq4-ps IREF
J13 CHAN 13 POWER SUPPLY yi2-tq4-ps CURRENT
J14 CHAN 14 POWER SUPPLY yi2-tq4-ps VOLTAGE
J15 CHAN 15 POWER SUPPLY yi2-tq4-ps ERROR

FR SHEET VAC
J5 CHAN 53 yi2-tq4-ps IGROUND

MADC MUX A/D IO PANEL
BLDG #: 1002B
RACK #: R02B08
PANEL #: MADC A/D IO PANEL H

-3 QTY REQD	-2 QTY REQD	-1 QTY REQD	REF DESIGNATOR	ITEM NO.	DESCRIPTION	MAT'L DWG NO._DWG NO.

INTERPRET IN GENERAL ACCORDANCE WITH ASME Y14.24M-1989
UNLESS OTHERWISE SPECIFIED DIMENSIONS ARE IN INCHES
DECIMAL TOLERANCES .X ±.030 .XX ±.015 .XXX ±.005
ANGULAR TOLERANCE ± .5°
FINISH: NA
BREAK SHARP EDGES MAX. XX MIN. XX
OUTSTANDING ECN

Q.A. CATEGORY A-3

DRAWN BY	Ed Koropsak	5/20/98
CHECKED BY		
DESIGN APPROVAL		
ENGINEER APPROVAL	R.MICHNOFF	5/20/98
SUPVR. APPROVAL		

NEXT ASSEMBLY

BROOKHAVEN NATIONAL LABORATORY
UPTON, N.Y. 11973
RHIC CONTROLS WIRING DIAGRAM
BLDG. 1002B, CFE-2B-PS2
yo1-tq6-ps/yi2-tq4-ps

SIZE D | 94028539 | REV. A
DRAWING NUMBER
MATERIAL: —— SCALE: NA WEIGHT: — SHEET 31

1 *AUTOCAD

PDF created with FinePrint pdfFactory Pro trial version http://www.fineprint.com

REV.	ZONE	ECN NO.	DATE	BY	CKR	APP.

Controls, C-AD 6/19/2003 9:22 AM 8539_32.dwg

V115 WAVEFORM GENERATOR (C)
BLDG #: 1002B
RACK #: R02B08
CHASSIS ID: CFE-2B-PS2
SLOT #: 10
A24 BASE ADDRESS: 180000

T215-2
BLDG #: 1002B
RACK #: R02B08
CHASSIS ID: CFE-2B-PS2
SLOT #: 10
A24 BASE ADDRESS: N/A

V115
VME SEL
RESET
FAIL
RUN
EVENTLINK
RTDL
RCV A
XMT A
RCV B
XMT B

T215
POWER
EVENTLNK
RTDL
XMT_2A
XMT_2B
XMT_A
RCV_A
XMT_B
RCV_B

ACS

EVENT LINK
BLDG #: 1002B
RACK #: R02B08
FANOUT #: A

OUTPUT J13

RTDL
BLDG #: 1002B
RACK #: R02B08
FANOUT #: B

OUTPUT J13

ASSY# 94028176
LENGTH = 1 FT
(TYP 2 PLACES)

P2 INTERFACE RIBBON CABLE
ASSY# 94028159

ASSY# 94028108

ASSY# 94028441

62.5/125 MULTIMODE FIBER (TYP 4 PLACES)

PWR SUPPLY yi2-tq5-ps
+/-100A @ +/-10V
BLDG#: 1002B
RACK#: R2BQT4

RX
TX

PWR SUPPLY INTERFACE
ASSY.# 94028652-3

LEMO TWO CONDUCTOR PLUG ASSEMBLY (TYP 5 PLACES)

MADC MUX A/D IO PANEL
BLDG #: 1002B
RACK #: R02B08
PANEL #: MADC A/D IO PANEL B

FR SHEET29

J0 CHAN 16 POWER SUPPLY yi2-tq5-ps IREF
J1 CHAN 17 POWER SUPPLY yi2-tq5-ps CURRENT
J2 CHAN 18 POWER SUPPLY yi2-tq5-ps VOLTAGE
J3 CHAN 19 POWER SUPPLY yi2-tq5-ps ERROR

TO SHEET 32

FR SHEET 31
J6 CHAN 54 yi2-tq5-ps IGROUND

MADC MUX A/D IO PANEL
BLDG #: 1002B
RACK #: R02B08
PANEL #: MADC A/D IO PANEL H

PWR SUPPLY yi2-tq6-ps
+/-100A @ +/-10V
BLDG#: 1002B
RACK#: R2BQT4

RX
TX

PWR SUPPLY INTERFACE
ASSY.# 94028652-3

LEMO TWO CONDUCTOR PLUG ASSEMBLY (TYP 5 PLACES)

MADC MUX A/D IO PANEL
BLDG #: 1002B
RACK #: R02B08
PANEL #: MADC A/D IO PANEL B

FR SHEET32

J4 CHAN 20 POWER SUPPLY yi2-tq6-ps IREF
J5 CHAN 21 POWER SUPPLY yi2-tq6-ps CURRENT
J5 CHAN 22 POWER SUPPLY yi2-tq6-ps VOLTAGE
J7 CHAN 23 POWER SUPPLY yi2-tq6-ps ERROR

TO SHEET 33

FR SHEET 32
J7 CHAN 55 yi2-tq6-ps IGROUND

MADC MUX A/D IO PANEL
BLDG #: 1002B
RACK #: R02B08
PANEL #: MADC A/D IO PANEL H

V115 JUMPER LIST

JP3=IN
JP4=IN
JP1=OUT
JP2=OUT

A24 BASE ADDRESS
JB1-A23=IN
JB1-A22=IN
JB1-A21=IN
JB1-A20=OUT
JB1-A19=OUT
JB1-A18=IN

-3 QTY REQD	-2 QTY REQD	-1 QTY REQD	REF DESIGNATOR	ITEM NO.	DESCRIPTION	MAT'L DWG NO./MFR. NO.

INTERPRET IN GENERAL ACCORDANCE WITH ASME Y14.24M-1989
UNLESS OTHERWISE SPECIFIED DIMENSIONS ARE IN INCHES
DECIMAL TOLERANCES X ±.030 .XX ±.015 .XXX ±.005 ANGULAR TOLERANCE ± .5°
FINISH: NA
BREAK SHARP EDGES MAX. XX MIN. XX
OUTSTANDING ECN

Q.A. CATEGORY A-3

DRAWN BY	Ed Koropsak	5/20/98
CHECKED BY		
DESIGN APPROVAL		
ENGINEER APPROVAL	R.MICHNOFF	5/20/98
SUPVR. APPROVAL		

NEXT ASSEMBLY

BROOKHAVEN NATIONAL LABORATORY
UPTON, N.Y. 11973
RHIC CONTROLS WIRING DIAGRAM
BLDG. 1002B, CFE-2B-PS2
yi2-tq5-ps/yi2-tq6-ps

SIZE D
94028539
REV. A
DRAWING NUMBER
MATERIAL: ——— SCALE: NA WEIGHT: – SHEET 32

*AUTOCAD

PDF created with FinePrint pdfFactory Pro trial version http://www.fineprint.com

REV.	ZONE	ECN NO.	DATE	BY	CKR	APP.

Controls 8/17/99 1:18 PM 8539_33.dwg

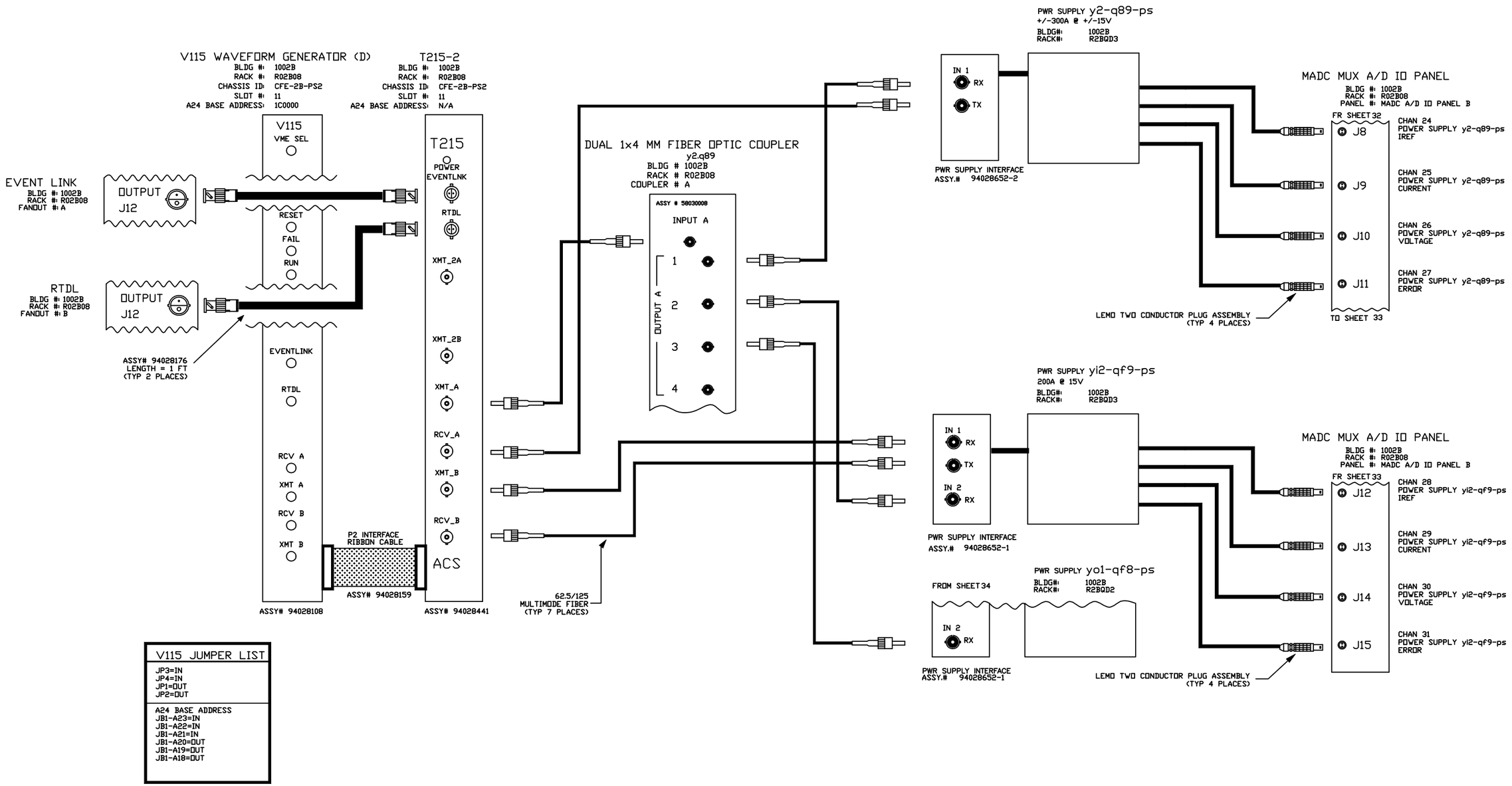

V115 JUMPER LIST
JP3=IN JP4=IN JP1=OUT JP2=OUT
A24 BASE ADDRESS JB1-A23=IN JB1-A22=IN JB1-A21=IN JB1-A20=OUT JB1-A19=OUT JB1-A18=OUT

-3	-2	-1	QTY REQD	REF DESIGNATOR	ITEM NO.	DESCRIPTION	MAT'L DWG NO./BNL NO.

INTERPRET IN GENERAL ACCORDANCE WITH ASME Y14.24M-1989

UNLESS OTHERWISE SPECIFIED DIMENSIONS ARE IN INCHES

DECIMAL TOLERANCES
.X ±.030
.XX ±.015
.XXX ±.005
ANGULAR TOLERANCE
± .5'

NA FINISH

BREAK SHARP EDGES
MAX. XX MIN. XX

OUTSTANDING ECN

Q.A. CATEGORY	A-3	DATE
DRAWN BY	Ed Koropsak	5/20/98
CHECKED BY		
DESIGN APPROVAL		
ENGINEER APPROVAL	R.MICHNOFF	5/20/98
SUPVR. APPROVAL		

NEXT ASSEMBLY

BROOKHAVEN NATIONAL LABORATORY
UPTON, N.Y. 11973

RHIC CONTROLS WIRING DIAGRAM

BLDG. 1002B, CFE-2B-PS1

y2-q89-ps/yi2-qf9-ps

SIZE D | 94028539 | REV. A

DRAWING NUMBER

MATERIAL: ——— SCALE: NA WEIGHT: – SHEET 33 OF 52

*AUTOCAD

REV.	ZONE	ECN NO.	DATE	BY	CKR	APP.

Controls 8/17/99 1:20 PM 8539_34.dwg

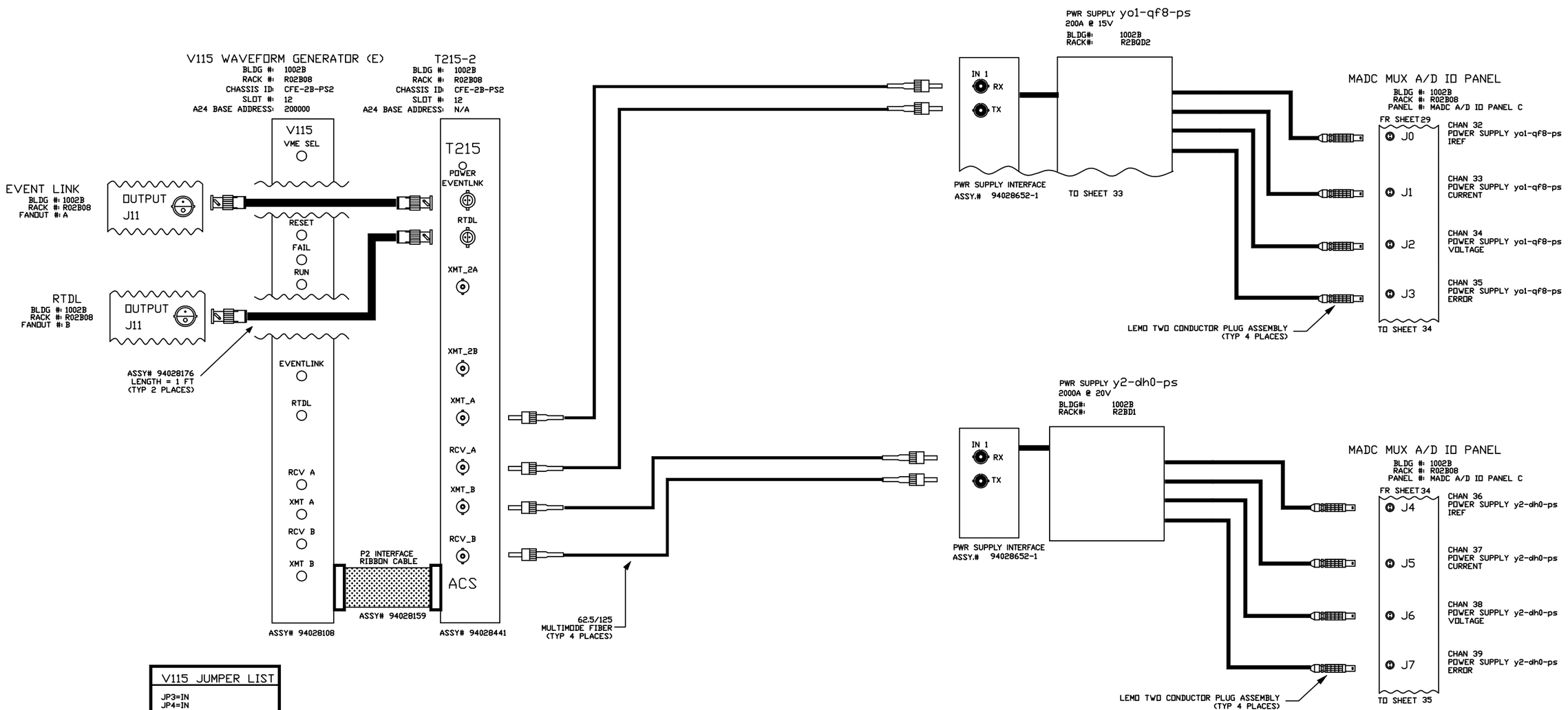

V115 JUMPER LIST
JP3=IN JP4=IN JP1=OUT JP2=OUT
A24 BASE ADDRESS JB1-A23=IN JB1-A22=IN JB1-A21=OUT JB1-A20=IN JB1-A19=IN JB1-A18=IN

-3	-2	-1 QTY REQD	REF DESIGNATOR	ITEM NO.	DESCRIPTION	MAT'L DWG NO./BNL NO.

INTERPRET IN GENERAL ACCORDANCE WITH ASME Y14.24M-1989

UNLESS OTHERWISE SPECIFIED DIMENSIONS ARE IN INCHES

DECIMAL TOLERANCES
X ±.030
.XX ±.015
.XXX ±.005
ANGULAR TOLERANCE ± .5°

FINISH: NA

BREAK SHARP EDGES MAX. XX MIN. XX

OUTSTANDING ECN

Q.A. CATEGORY	A-3	DATE
DRAWN BY	Ed Koropsak	5/20/98
CHECKED BY		
DESIGN APPROVAL		
ENGINEER APPROVAL	R.MICHNOFF	5/20/98
SUPVR. APPROVAL		

NEXT ASSEMBLY

BROOKHAVEN NATIONAL LABORATORY
UPTON, N.Y. 11973

RHIC CONTROLS WIRING DIAGRAM

BLDG. 1002B, CFE-2B-PS2

yo1-qf8-ps/y2-dh0-ps

SIZE D | 94028539 | REV. A

DRAWING NUMBER

MATERIAL: ——— SCALE: NA WEIGHT: — SHEET 34 OF 52

REV.	ZONE	ECN NO.	DATE	BY	CKR	APP.

C-A, BNL 3/15/01 9:35 AM 8539_35.dwg

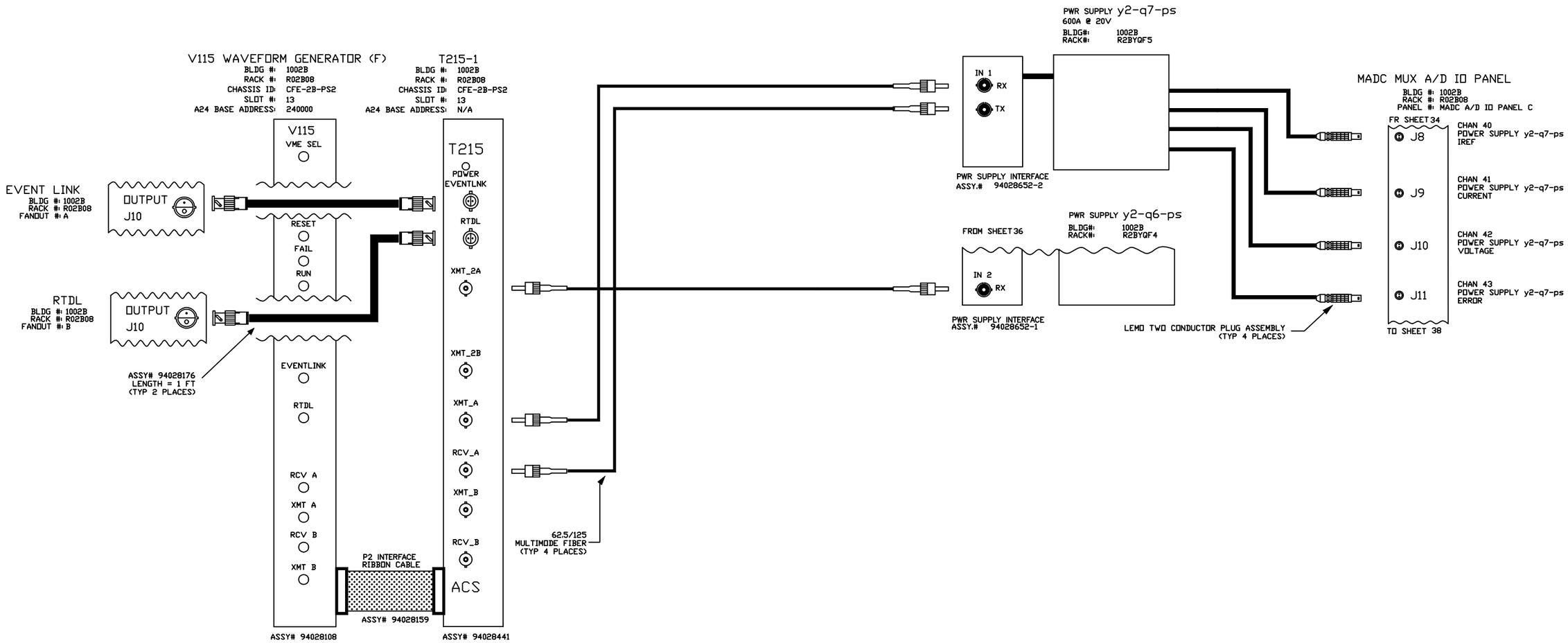

V115 JUMPER LIST
JP3=IN JP4=IN JP1=OUT JP2=OUT
A24 BASE ADDRESS JB1-A23=IN JB1-A22=IN JB1-A21=OUT JB1-A20=IN JB1-A19=IN JB1-A18=OUT

-3	-2	-1	QTY REQD	REF DESIGNATOR	ITEM NO.	DESCRIPTION	MAT'L DWG NO./BNL NO.

INTERPRET IN GENERAL ACCORDANCE WITH ASME Y14.24M-1989

UNLESS OTHERWISE SPECIFIED DIMENSIONS ARE IN INCHES

DECIMAL TOLERANCES
.X ±.030
.XX ±.015
.XXX ±.005
ANGULAR TOLERANCE
± .5°

OUTSTANDING ECN

NA
FINISH

BREAK SHARP EDGES
MAX. XX MIN. XX

Q.A. CATEGORY	A-3	DATE
DRAWN BY	Ed Koropsak	5/20/98
CHECKED BY		
DESIGN APPROVAL		
ENGINEER APPROVAL	R.MICHNOFF	5/20/98
SUPVR. APPROVAL		

NEXT ASSEMBLY

BROOKHAVEN NATIONAL LABORATORY
UPTON, N.Y. 11973

RHIC CONTROLS WIRING DIAGRAM

BLDG. 1002B, CFE-2B-PS2

y2-q7-ps

SIZE D | 94028539 | REV. A
DRAWING NUMBER

MATERIAL: ——— SCALE: NA WEIGHT: – SHEET 35 OF 52

*AUTOCAD

REV.	ZONE	ECN NO.	DATE	BY	CKR	APP.

CONTROLS- 3/15/01 10:28 AM 8539_36.dwg

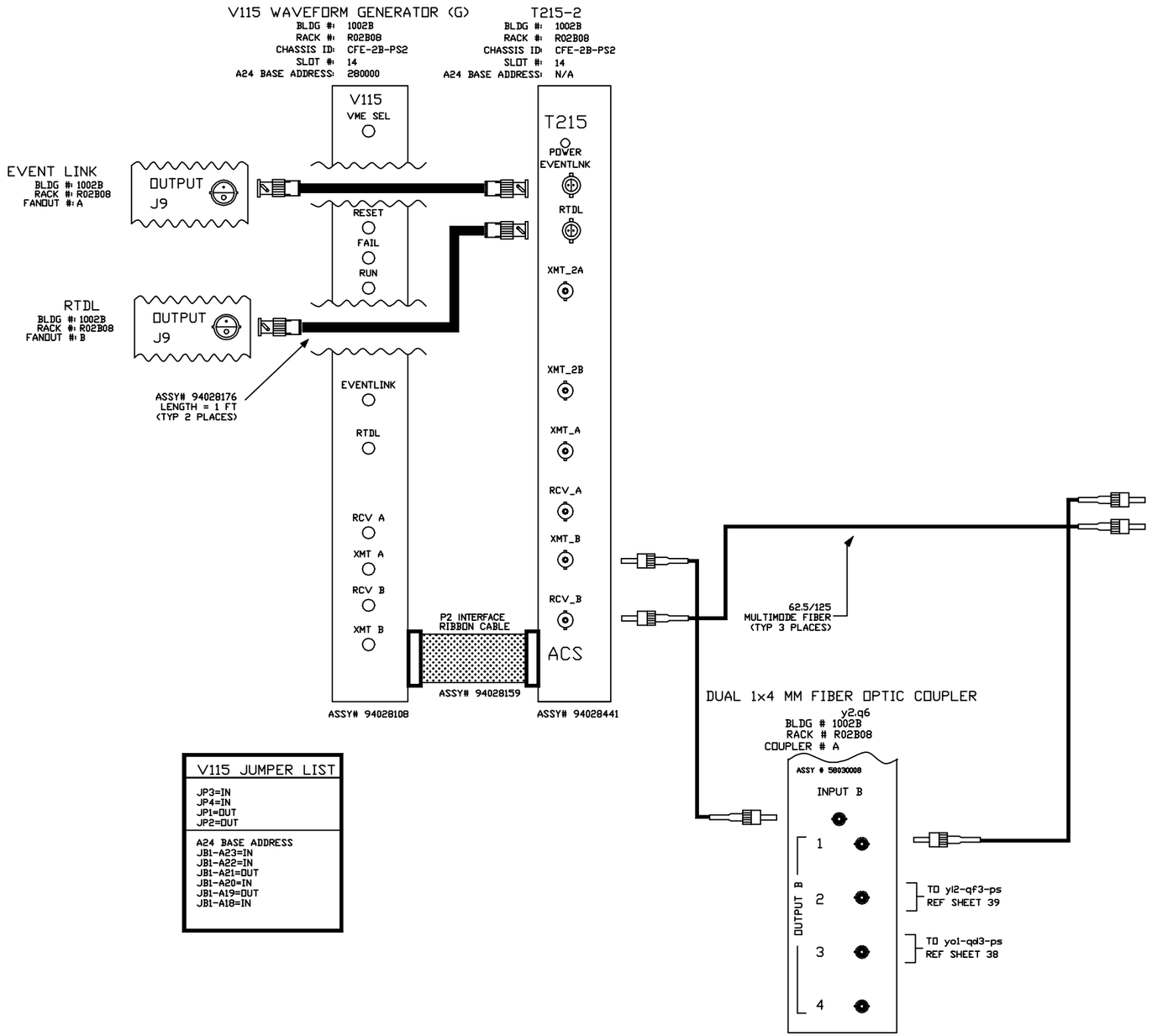

V115 JUMPER LIST

JP3=IN
JP4=IN
JP1=OUT
JP2=OUT

A24 BASE ADDRESS
JB1-A23=IN
JB1-A22=IN
JB1-A21=OUT
JB1-A20=IN
JB1-A19=OUT
JB1-A18=IN

-3	-2	-1 QTY REQD	REF DESIGNATOR	ITEM NO.	DESCRIPTION	MAT'L DWG NO./PRL NO.

INTERPRET IN GENERAL ACCORDANCE WITH ASME Y14.24M-1989
UNLESS OTHERWISE SPECIFIED DIMENSIONS ARE IN INCHES
DECIMAL TOLERANCES
.X ±.030
.XX ±.015
.XXX ±.005
ANGULAR TOLERANCE ± .5°
FINISH NA
BREAK SHARP EDGES MAX. XX MIN. XX
OUTSTANDING ECN
NEXT ASSEMBLY

Q.A. CATEGORY A-3		DATE
DRAWN BY	Ed Koropsak	5/20/98
CHECKED BY		
DESIGN APPROVAL		
ENGINEER APPROVAL	R.MICHNOFF	5/20/98
SUPVR. APPROVAL		

BROOKHAVEN NATIONAL LABORATORY
UPTON, N.Y. 11973
RHIC CONTROLS WIRING DIAGRAM
BLDG. 1002B, CFE-2B-PS2
y2-q6-ps

SIZE D | 94028539 DRAWING NUMBER | REV. A
MATERIAL: ——— SCALE: NA WEIGHT: — SHEET 36 OF 52

*AUTOCAD

REV.	ZONE	ECN NO.	DATE	BY	CKR	APP.

Controls, C-AD 6/13/2003 2:29 PM 8539_37.dwg

BLANK PAGE

QTY REQD	REF DESIGNATOR	ITEM NO.	DESCRIPTION	MAT'L SPEC NO./DWG NO.

INTERPRET IN GENERAL ACCORDANCE WITH ASME Y14.24M-1989

UNLESS OTHERWISE SPECIFIED DIMENSIONS ARE IN INCHES

DECIMAL TOLERANCES
.X ±.030
.XX ±.015
.XXX ±.005
ANGULAR TOLERANCE ± .5°

NA FINISH

BREAK SHARP EDGES
MAX. XX MIN. XX

OUTSTANDING ECN

Q.A. CATEGORY A-3

		DATE
DRAWN BY	Ed Koropsak	5/20/98
CHECKED BY		
DESIGN APPROVAL		
ENGINEER APPROVAL	R.MICHNOFF	5/20/98
SUPVR. APPROVAL		

NEXT ASSEMBLY

BROOKHAVEN NATIONAL LABORATORY
UPTON, N.Y. 11973

RHIC CONTROLS WIRING DIAGRAM
BLDG. 1002B, CFE-2B-PS2
BLANK

SIZE D | 94028539 DRAWING NUMBER | REV. A

MATERIAL: —— | SCALE: NA | WEIGHT: – | SHEET 37

*AUTOCAD

PDF created with FinePrint pdfFactory Pro trial version http://www.fineprint.com

REV.	ZONE	ECN NO.	DATE	BY	CKR	APP.

Controls, C-AD 6/13/2003 2:30 PM 8539_38.dwg

BLANK PAGE

-3	-2	-1	QTY REQD	REF DESIGNATOR	ITEM NO.	DESCRIPTION	MAT'L SPEC NO./DWG NO.	PART NO./DWG NO.

INTERPRET IN GENERAL ACCORDANCE WITH ASME Y14.24M-1989

UNLESS OTHERWISE SPECIFIED DIMENSIONS ARE IN INCHES

DECIMAL TOLERANCES
.X ±.030
.XX ±.015
.XXX ±.005
ANGULAR TOLERANCE ± .5'

NA FINISH

BREAK SHARP EDGES MAX. XX MIN. XX

OUTSTANDING ECN

NEXT ASSEMBLY

Q.A. CATEGORY A-3		DATE
DRAWN BY	Ed Koropsak	5/20/98
CHECKED BY		
DESIGN APPROVAL		
ENGINEER APPROVAL	R.MICHNOFF	5/20/98
SUPVR. APPROVAL		

BROOKHAVEN NATIONAL LABORATORY
UPTON, N.Y. 11973

RHIC CONTROLS WIRING DIAGRAM
BLDG. 1002B, CFE-2B-PS2
BLANK

SIZE D | 94028539 DRAWING NUMBER | REV. A

MATERIAL: ——— SCALE: NA WEIGHT: - SHEET 38

*AUTOCAD

PDF created with FinePrint pdfFactory Pro trial version http://www.fineprint.com

REV.	ZONE	ECN NO.	DATE	BY	CKR	APP.

Controls, C-AD 6/13/2003 2:31 PM 8539_39.dwg

BLANK PAGE

-3	-2	-1	QTY REQD	REF DESIGNATOR	ITEM NO.	DESCRIPTION	MAT'L DWG NO./PRL NO.

INTERPRET IN GENERAL ACCORDANCE WITH ASME Y14.24M-1989

UNLESS OTHERWISE SPECIFIED DIMENSIONS ARE IN INCHES

DECIMAL TOLERANCES
.X ±.030
.XX ±.015
.XXX ±.005
ANGULAR TOLERANCE ± .5'

NA FINISH

BREAK SHARP EDGES MAX. XX MIN. XX

OUTSTANDING ECN

NEXT ASSEMBLY

Q.A. CATEGORY A-3		DATE
DRAWN BY	Ed Koropsak	5/20/98
CHECKED BY		
DESIGN APPROVAL		
ENGINEER APPROVAL	R.MICHNOFF	5/20/98
SUPVR. APPROVAL		

BROOKHAVEN NATIONAL LABORATORY
UPTON, N.Y. 11973

RHIC CONTROLS WIRING DIAGRAM
BLDG. 1002B, CFE-2B-PS2
BLANK

SIZE D | 94028539 DRAWING NUMBER | REV. A

MATERIAL: ——— SCALE: NA WEIGHT: – SHEET 39

*AUTOCAD

PDF created with FinePrint pdfFactory Pro trial version http://www.fineprint.com

REV.	ZONE	ECN NO.	DATE	BY	CKR	APP.

Controls, C-AD 6/20/2003 11:34 AM 8539_47.dwg

MADC MUX A/D IO PANEL

BLDG #: 1002B
RACK #: R02B09
PANEL #: MADC A/D IO PANEL D

FR SHEET 12

J0	CHAN 48 POWER SUPPLY IREF
J1	CHAN 49 POWER SUPPLY CURRENT
J2	CHAN 50 POWER SUPPLY VOLTAGE
J3	CHAN 51 POWER SUPPLY ERROR

TO SHEET 19

MADC MUX A/D IO PANEL

BLDG #: 1002B
RACK #: R02B09
PANEL #: MADC A/D IO PANEL D

FR SHEET 12

J8	CHAN 56 POWER SUPPLY IREF
J9	CHAN 57 POWER SUPPLY CURRENT
J10	CHAN 58 POWER SUPPLY VOLTAGE
J11	CHAN 59 POWER SUPPLY ERROR

TO SHEET 47

MADC MUX A/D IO PANEL

BLDG #: 1002B
RACK #: R02B09
PANEL #: MADC A/D IO PANEL D

FR SHEET 47

J12	CHAN 60 POWER SUPPLY IREF
J13	CHAN 61 POWER SUPPLY CURRENT
J14	CHAN 62 POWER SUPPLY VOLTAGE
J15	CHAN 63 POWER SUPPLY ERROR

MADC MUX A/D IO PANEL

BLDG #: 1002B
RACK #: R02B09
PANEL #: MADC A/D IO PANEL G

FR SHEET 54

J0	CHAN 32 POWER SUPPLY IREF
J1	CHAN 33 POWER SUPPLY CURRENT
J2	CHAN 34 POWER SUPPLY VOLTAGE
J3	CHAN 35 POWER SUPPLY ERROR

TO SHEET 47

MADC MUX A/D IO PANEL

BLDG #: 1002B
RACK #: R02B09
PANEL #: MADC A/D IO PANEL G

FR SHEET 47

J4	CHAN 36 POWER SUPPLY XXX SETPOINT XXXX
J5	CHAN 37 POWER SUPPLY XXX SETPOINT XXXX
J6	CHAN 38 POWER SUPPLY XXX SETPOINT XXXX
J7	CHAN 39 POWER SUPPLY XXX SETPOINT XXXX
J8	CHAN 40 POWER SUPPLY XXX SETPOINT XXXX
J9	CHAN 41 POWER SUPPLY XXX SETPOINT XXXX
J10	CHAN 42 POWER SUPPLY XXX SETPOINT XXXX

TO SHEET 14

MADC MUX A/D IO PANEL

BLDG #: 1002B
RACK #: R02B08
PANEL #: MADC A/D IO PANEL C

FR SHEET 35

J12	CHAN 44 POWER SUPPLY IREF
J13	CHAN 45 POWER SUPPLY CURRENT
J14	CHAN 46 POWER SUPPLY VOLTAGE
J15	CHAN 47 POWER SUPPLY ERROR

MADC MUX A/D IO PANEL

BLDG #: 1002B
RACK #: R02B08
PANEL #: MADC A/D IO PANEL D

FR SHEET 54

J0	CHAN 48 POWER SUPPLY IREF
J1	CHAN 49 POWER SUPPLY CURRENT
J2	CHAN 50 POWER SUPPLY VOLTAGE
J3	CHAN 51 POWER SUPPLY ERROR

TO SHEET 36

MADC MUX A/D IO PANEL

BLDG #: 1002B
RACK #: R02B08
PANEL #: MADC A/D IO PANEL D

FR SHEET 36

J8	CHAN 56 POWER SUPPLY IREF
J9	CHAN 57 POWER SUPPLY CURRENT
J10	CHAN 58 POWER SUPPLY VOLTAGE
J11	CHAN 59 POWER SUPPLY ERROR

TO SHEET 47

MADC MUX A/D IO PANEL

BLDG #: 1002B
RACK #: R02B08
PANEL #: MADC A/D IO PANEL D

FR SHEET 47

J12	CHAN 60 POWER SUPPLY IREF
J13	CHAN 61 POWER SUPPLY CURRENT
J14	CHAN 62 POWER SUPPLY VOLTAGE
J15	CHAN 63 POWER SUPPLY ERROR

MADC MUX A/D IO PANEL

BLDG #: 1002B
RACK #: R02B08
PANEL #: MADC A/D IO PANEL F

FR SHEET 32

J8	CHAN 24 POWER SUPPLY IREF
J9	CHAN 25 POWER SUPPLY CURRENT
J10	CHAN 26 POWER SUPPLY VOLTAGE
J11	CHAN 27 POWER SUPPLY ERROR

TO SHEET 47

MADC MUX A/D IO PANEL

BLDG #: 1002B
RACK #: R02B08
PANEL #: MADC A/D IO PANEL F

FR SHEET 47

J12	CHAN 28 POWER SUPPLY IREF
J13	CHAN 29 POWER SUPPLY CURRENT
J14	CHAN 30 POWER SUPPLY VOLTAGE
J15	CHAN 31 POWER SUPPLY ERROR

MADC MUX A/D IO PANEL

BLDG #: 1002B
RACK #: R02B08
PANEL #: MADC A/D IO PANEL G

FR SHEET 54

J0	CHAN 32 POWER SUPPLY XXX SETPOINT XXXX
J1	CHAN 33 POWER SUPPLY XXX SETPOINT XXXX
J2	CHAN 34 POWER SUPPLY XXX SETPOINT XXXX
J3	CHAN 35 POWER SUPPLY XXX SETPOINT XXXX
J4	CHAN 36 POWER SUPPLY XXX SETPOINT XXXX
J5	CHAN 37 POWER SUPPLY XXX SETPOINT XXXX
J6	CHAN 38 POWER SUPPLY XXX SETPOINT XXXX
J7	CHAN 39 POWER SUPPLY XXX SETPOINT XXXX
J8	CHAN 40 POWER SUPPLY XXX SETPOINT XXXX
J9	CHAN 41 POWER SUPPLY XXX SETPOINT XXXX
J10	CHAN 42 POWER SUPPLY XXX SETPOINT XXXX
J11	CHAN 43 POWER SUPPLY XXX SETPOINT XXXX
J12	CHAN 44 POWER SUPPLY XXX SETPOINT XXXX

TO SHEET 50

-3	-2	-1	REF DESIGNATOR	ITEM NO.	DESCRIPTION	MAT'L DWG NO./DWG NO.
QTY REQD						

INTERPRET IN GENERAL ACCORDANCE WITH ASME Y14.24M-1989

UNLESS OTHERWISE SPECIFIED DIMENSIONS ARE IN INCHES

DECIMAL TOLERANCES
.X ±.030
.XX ±.015
.XXX ±.005
ANGULAR TOLERANCE ± .5'

OUTSTANDING ECN

NA
FINISH

BREAK SHARP EDGES
MAX. XX MIN. XX

Q.A. CATEGORY A-3		DATE
DRAWN BY	Ed Koropsak	6/3/98
CHECKED BY		
DESIGN APPROVAL		
ENGINEER APPROVAL	R.MICHNOFF	5/20/98
SUPVR. APPROVAL		

NEXT ASSEMBLY

BROOKHAVEN NATIONAL LABORATORY
UPTON, N.Y. 11973

RHIC CONTROLS WIRING DIAGRAM

BLDG. 1002B

SPARE MADC CHANNELS

SIZE D | 94028539 | REV. A

DRAWING NUMBER

MATERIAL: ——— SCALE: NA WEIGHT: – SHEET 47

*AUTOCAD

PDF created with FinePrint pdfFactory Pro trial version http://www.fineprint.com

REV.	ZONE	ECN NO.	DATE	BY	CKR	APP.

MULTIMODE FIBER OPTIC TRANSMITTER

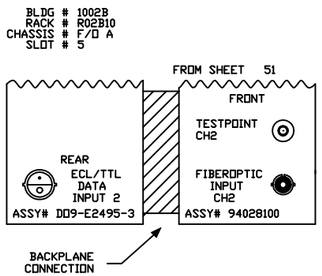

FIBER OPTIC RECEIVER

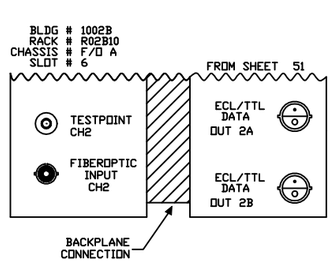

FIBER OPTIC RECEIVER

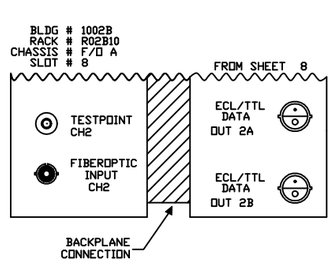

-3	-2	-1	REF DESIGNATOR	ITEM NO.	DESCRIPTION	MAT'L DWG NO./BNL NO.
QTY REQD						

INTERPRET IN GENERAL ACCORDANCE WITH ASME Y14.24M–1989

UNLESS OTHERWISE SPECIFIED DIMENSIONS ARE IN INCHES

DECIMAL TOLERANCES
.X ±.030
.XX ±.015
.XXX ±.005
ANGULAR TOLERANCE ± .5°

OUTSTANDING ECN

NA
FINISH

BREAK SHARP EDGES
MAX. XX MIN. XX

Q.A. CATEGORY A–3		DATE	BROOKHAVEN NATIONAL LABORATORY
DRAWN BY	Ed Koropsak	6/3/98	UPTON, N.Y. 11973
CHECKED BY			RHIC CONTROLS WIRING DIAGRAM
DESIGN APPROVAL			SERVICE BLDG. 1002B
ENGINEER APPROVAL	R. MICHNOFF	6/3/98	SPARE F/O RCVR/XMIT CHANNELS
SUPVR. APPROVAL			94028539
NEXT ASSEMBLY			SIZE D · DRAWING NUMBER · REV. A
MATERIAL: ———	SCALE: NA	WEIGHT: –	SHEET 48 OF 52

*AUTOCAD

REV.	ZONE	ECN NO.	DATE	BY	CKR	APP.

Controls, C-AD 6/20/2003 1:21 PM 8539_49.dwg

V102 DELAY MODULE
BLDG #: 1002B
RACK #: R02B08
CHASSIS ID: CFE-2B-PS2
SLOT #: 20
A16 BASE ADDRESS: E600

EVENT LINK
BLDG #: 1002B
RACK #: R02B08
FANOUT #: A

OUTPUT
J2

ASSY# 94028176
LENGTH AS REQUIRED

V102
VME SEL
OFFLINE
EXT INPUTS
TRG 1/2
TRG 3/4
TRG 5/6
TRG 7/8
CLK
EVENTLINK
OUTPUTS
CH1
CH2
CH3
CH4
CH5
CH6
CH7
CH8

ASSY# 94028070

To CFE-2B-PS2, SIS3803, SLOT 21, CH 3'SHADOW PULSE'
REF SHEET x

V102 DELAY MODULE JUMPER LIST

A16 BASE ADDRESS 0XFFFFE600 JP1=OUT JP2=OUT JP3=OUT JP4=IN JP5=IN JP6=OUT JP7=OUT
EVENT LINK INPUT JP8=IN JP9=OUT JP10=OUT
JP11=IN JP12=IN JP13=OUT JP14=IN

-3	-2	-1	QTY REQD	REF DESIGNATOR	ITEM NO.	DESCRIPTION	MAT'L DWG NO./BNL NO.

INTERPRET IN GENERAL ACCORDANCE WITH ASME Y14.24M-1989
UNLESS OTHERWISE SPECIFIED DIMENSIONS ARE IN INCHES
DECIMAL TOLERANCES
.X ±.030
.XX ±.015
.XXX ±.005
ANGULAR TOLERANCE ± .5'
FINISH NA
BREAK SHARP EDGES
MAX. XX MIN. XX
OUTSTANDING ECN

Q.A. CATEGORY A-3

DRAWN BY	Ed Koropsak	6/1/98
CHECKED BY		
DESIGN APPROVAL		
ENGINEER APPROVAL	R. MICHNOFF	6/1/98
SUPVR. APPROVAL		

NEXT ASSEMBLY

BROOKHAVEN NATIONAL LABORATORY
UPTON, N.Y. 11973
RHIC CONTROLS WIRING DIAGRAM
BLDG. 1002B CHASSIS CFE-2B-PS2
V102 DELAY MODULE

SIZE D
94028539
REV. A
DRAWING NUMBER
MATERIAL: ——— SCALE: NA WEIGHT: – SHEET 49

*AUTOCAD

PDF created with FinePrint pdfFactory Pro trial version http://www.fineprint.com

REV.	ZONE	ECN NO.	DATE	BY	CKR	APP.

Controls, C-AD 6/20/2003 1:54 PM 8539_50.dwg

DX Heater PS MADC Readbacks, 208V, VAC

MADC MUX A/D IO PANEL
BLDG #: 1004B
RACK #: R02B09
PANEL #: MADC A/D IO PANEL H

FR SHEET 12
- J1 — CHAN 49 POWER SUPPLY 1002B-1-1-A2 VOLTAGE g1-dxh-hta
- J2 — CHAN 50 POWER SUPPLY 1002B-1-1-A2 CURRENT g1-dxh-hta
- J3 — CHAN 51 POWER SUPPLY 1002B-1-1-A2 GND CURRENT g1-dxh-hta

TO SHEET 50

MADC MUX A/D IO PANEL
BLDG #: 1004B
RACK #: R02B09
PANEL #: MADC A/D IO PANEL H

FR SHEET 50
- J7 — CHAN 55 POWER SUPPLY 1002B-2-1-A1 VOLTAGE g2-dxh-hta
- J8 — CHAN 56 POWER SUPPLY 1002B-2-1-A1 CURRENT g2-dxh-hta
- J9 — CHAN 57 POWER SUPPLY 1002B-2-1-A1 GND CURRENT g2-dxh-hta

TO SHEET 50

MADC MUX A/D IO PANEL
BLDG #: 1002B
RACK #: R02B08
PANEL #: MADC A/D IO PANEL G

FR SHEET 47
- J13 — CHAN 45 VAC-1
- J14 — CHAN 46 VAC-2
- J15 — CHAN 47 VAC-3

MADC MUX A/D IO PANEL
BLDG #: 1004B
RACK #: R02B09
PANEL #: MADC A/D IO PANEL H

FR SHEET 50
- J4 — CHAN 52 POWER SUPPLY 1002B-1-2-B2 VOLTAGE g1-dxh-htb
- J5 — CHAN 53 POWER SUPPLY 1002B-1-2-B2 CURRENT g1-dxh-htb
- J6 — CHAN 54 POWER SUPPLY 1002B-1-2-B2 GND CURRENT g1-dxh-htb

TO SHEET 50

MADC MUX A/D IO PANEL
BLDG #: 1004B
RACK #: R02B09
PANEL #: MADC A/D IO PANEL H

FR SHEET 50
- J10 — CHAN 58 POWER SUPPLY 1002B-2-2-B1 VOLTAGE g2-dxh-htb
- J11 — CHAN 59 POWER SUPPLY 1002B-2-2-B1 CURRENT g2-dxh-htb
- J12 — CHAN 60 POWER SUPPLY 1002B-2-2-B1 GND CURRENT g2-dxh-htb

TO SHEET 50

MADC MUX A/D IO PANEL
BLDG #: 1002B
RACK #: R02B09
PANEL #: MADC A/D IO PANEL H

FR SHEET 50
- J13 — CHAN 61 1002B-208V-BLUE V-1
- J14 — CHAN 62 1002B-208V-BLUE V-2
- J15 — CHAN 63 1002B-208V-BLUE V-3

MADC MUX A/D IO PANEL
BLDG #: 1002B
RACK #: R02B08
PANEL #: MADC A/D IO PANEL H

FR SHEET 54
- J0 — CHAN 48 VAC-4
- J1 — CHAN 49 VAC-5
- J2 — CHAN 50 VAC-6
- J3 — CHAN 51 VAC-7
- J4 — CHAN 52 VAC-8

TO SHEET 31

MADC MUX A/D IO PANEL
BLDG #: 1002B
RACK #: R02B08
PANEL #: MADC A/D IO PANEL H

FR SHEET 31
- J11 — CHAN 59 ROOM TEMP
- J12 — CHAN 60 HB TEMP
- J13 — CHAN 61 1002B-208V-YEL V-1
- J14 — CHAN 62 1002B-208V-YEL V-2
- J15 — CHAN 63 1002B-208V-YEL V-3

-3	-2	-1 QTY REQD	REF DESIGNATOR	ITEM NO.	DESCRIPTION	MAT'L DWG NO./ENG. NO.

INTERPRET IN GENERAL ACCORDANCE WITH ASME Y14.24M-1989
UNLESS OTHERWISE SPECIFIED DIMENSIONS ARE IN INCHES
DECIMAL TOLERANCES X ±.030 .XX ±.015 .XXX ±.005 ANGULAR TOLERANCE ± .5°
NA FINISH
BREAK SHARP EDGES MAX. XX MIN. XX
OUTSTANDING ECN

Q.A. CATEGORY A-3	DATE	BROOKHAVEN NATIONAL LABORATORY	
DRAWN BY Ed Koropsak	6/1/98	UPTON, N.Y. 11973	
CHECKED BY		RHIC CONTROLS WIRING DIAGRAM	
DESIGN APPROVAL		BLDG. 1002B CHASSIS MADC Readbacks	
ENGINEER APPROVAL R. MICHNOFF	6/1/98	DX Heater,Vac,208V	
SUPVR. APPROVAL		SIZE D — 94028539 — REV. A	
NEXT ASSEMBLY		DRAWING NUMBER	
MATERIAL: ———	SCALE: NA	WEIGHT: –	SHEET 50

1 *AUTOCAD

PDF created with FinePrint pdfFactory Pro trial version http://www.fineprint.com

REV.	ZONE	ECN NO.	DATE	BY	CKR	APP.

Controls 8/17/99 1:42 PM 8539_51.dwg

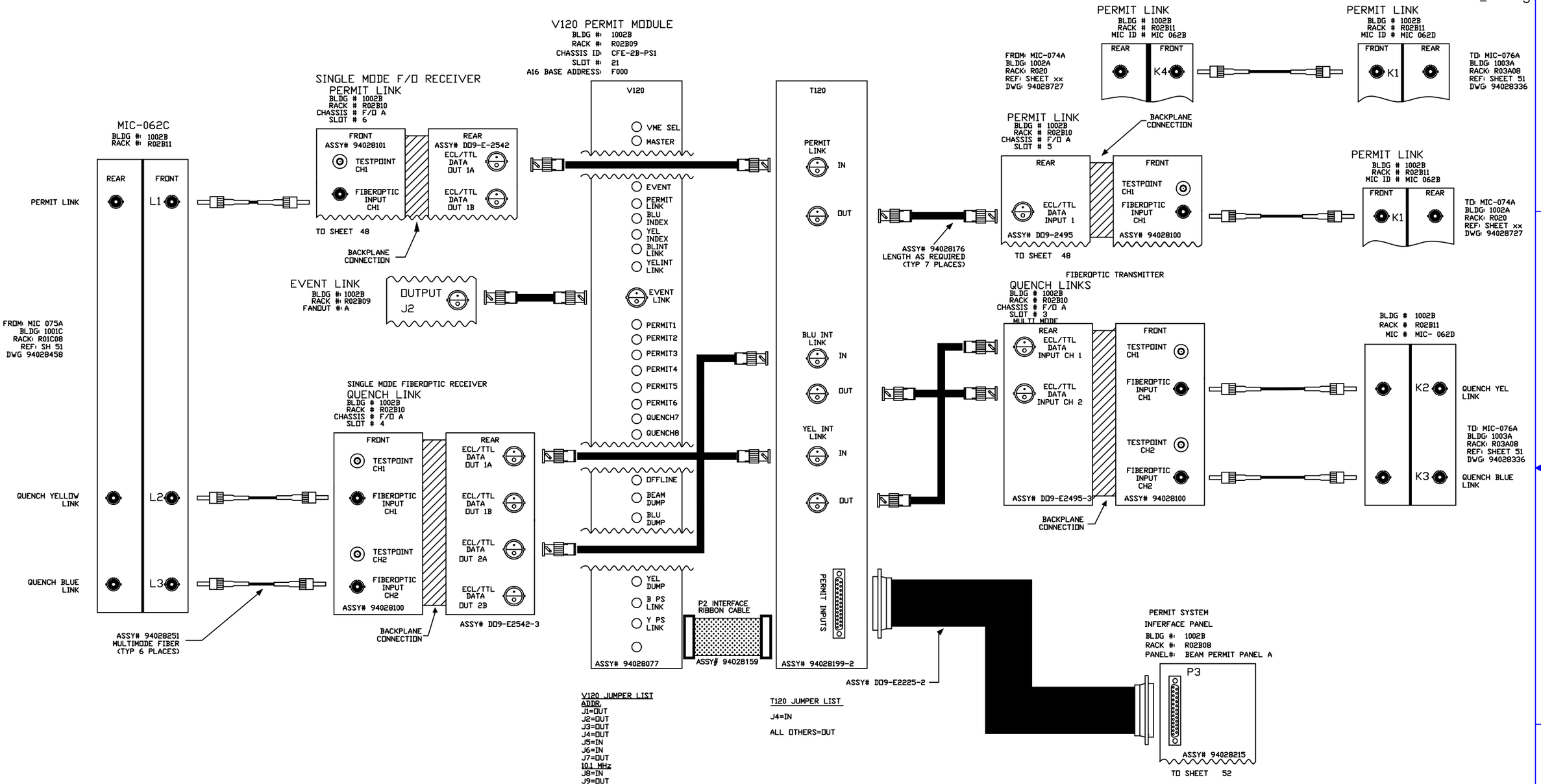

V120 JUMPER LIST
ADDR.
J1=OUT
J2=OUT
J3=OUT
J4=OUT
J5=IN
J6=IN
J7=OUT
10.1 MHz
J8=IN
J9=OUT
J10=OUT
QUENCH INPUTS ARE PERMIT
J11=OUT
MASTER
J12=OUT
QUENCH DISABLE
J13=OUT
J14=OUT

T120 JUMPER LIST
J4=IN
ALL OTHERS=OUT

-3 QTY REQD	-2 QTY REQD	-1 QTY REQD	REF DESIGNATOR	ITEM NO.	DESCRIPTION	MAT'L DWG NO./BNK NO.

INTERPRET IN GENERAL ACCORDANCE WITH ASME Y14.24M-1989
UNLESS OTHERWISE SPECIFIED DIMENSIONS ARE IN INCHES
DECIMAL TOLERANCES
.X ±.030
.XX ±.015
.XXX ±.005
ANGULAR TOLERANCE ± .5°
NA FINISH
BREAK SHARP EDGES
MAX. XX MIN. XX
OUTSTANDING ECN

Q.A. CATEGORY A-3	DATE	BROOKHAVEN NATIONAL LABORATORY
DRAWN BY Ed Koropsak	5/15/98	UPTON, N.Y. 11973
CHECKED BY		RHIC CONTROLS WIRING DIAGRAM
DESIGN APPROVAL		SERVIVE BLDG. 1002B, CHASSIS CFE-2B-PS2
ENGINEER APPROVAL R. MICHNOFF	5/15/98	V120/T120 PERMIT SYSTEM
SUPVR. APPROVAL		94028539
NEXT ASSEMBLY		SIZE D · REV. A
		DRAWING NUMBER
MATERIAL: ——	SCALE: NA	WEIGHT: — · SHEET 51 OF 52

1 *AUTOCAD

REV.	ZONE	ECN NO.	DATE	BY	CKR	APP.

CONTROLS- 12/31/01 4:21 PM 8539_52.dwg

PERMIT SYSTEM INTERFACE MODULE

BLDG #: 1002B
RACK #: R02B08
PANEL #: PERMIT I/F PANEL A

FROM SHEET 51

ASSY # 94028215

OUTPUTS

PERMIT LEVEL

BLUE

YELLOW

INPUTS

1 — PASS DIV A

2 — PASS DIV B

3 — BLUE VAC

4 — YEL VAC

5 — N/C

6 — BY PSPLL

7 — BLUE QUENCH

8 — YELLOW QUENCH

BEAM PERMIT SYSTEM

-3	-2	-1	REF DESIGNATOR	ITEM NO.	DESCRIPTION	MAT'L DWG NO./BNL NO.
QTY REQD						

INTERPRET IN GENERAL ACCORDANCE WITH ASME Y14.24M-1989

UNLESS OTHERWISE SPECIFIED DIMENSIONS ARE IN INCHES

DECIMAL TOLERANCES
.X ±.030
.XX ±.015
.XXX ±.005
ANGULAR TOLERANCE ± .5°

NA FINISH

BREAK SHARP EDGES MAX. XX MIN. XX

OUTSTANDING ECN

Q.A. CATEGORY A-3

DRAWN BY	Ed Koropsak	5/20/98
CHECKED BY		
DESIGN APPROVAL		
ENGINEER APPROVAL	R. MICHNOFF	5/20/98
SUPVR. APPROVAL		

NEXT ASSEMBLY

BROOKHAVEN NATIONAL LABORATORY
UPTON, N.Y. 11973

RHIC CONTROLS WIRING DIAGRAM

BLDG. 1002B, RACK R02B08

PERMIT SYSTEM INTERFACE PANEL

SIZE D — DRAWING NUMBER 94028539 — REV. A

MATERIAL: ——— SCALE: NA WEIGHT: – SHEET 52 OF 52

*AUTOCAD

REV.	ZONE	ECN NO.	DATE	BY	CKR	APP.

Controls, C-AD 6/30/2003 11:23 AM 8539_53.dwg

FRONT END COMPUTER
BLDG #: 1002B
RACK #: R02B09
CHASSIS ID: CFE-2B-PS3
SLOT #: 1
FEC NAME: cfe-2B-ps3

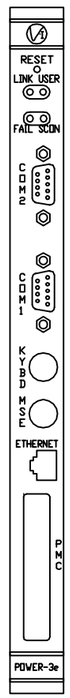

ETHERNET NETWORK

REF. NETWORK DIAGRAM

DEVICE: MM-6702 MEMORY MODULE
BLDG #: 1002B
RACK #: R02B09
CHASSIS ID: CFE-2B-PS3
SLOT #: 2
A24 BASE ADDRESS: XXX

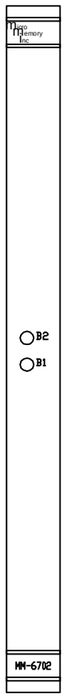

JUMPER LIST
1. REMOVE E1.
2. INSTALL E15.
3. SW3 CLOSE ALL POSITIONS.
4. SW2 CLOSE POSITIONS 7 AND 8.
5. SW1 CLOSE POSITIONS 2-8.
6. INSTALL E14 AND E25 TO ENABLE BATTERIES

EVENT LINK
BLDG #: 1002B
RACK #: R02B10
FANOUT #: A

RESET LINK
BLDG #: 1002B
RACK #: R02B10
FANOUT #: C

REAL TIME DATA LINK
BLDG #: 1002B
RACK #: R02B10
FANOUT #: B

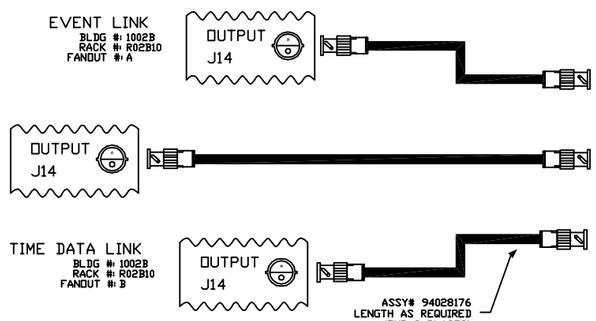

JUMPER LIST

E25 through E50 are configured for remote reset address at the time of board acceptance test.
DO NOT MODIFY!

Remote reset pulls VME SYS Reset.
E58-E60, E59-E61

A24 BASE ADDRESS= 4000h
E57-E13, E2-E14, E3-E15, E4-E16, E5-E17, E6-E18
E7-E19, E8-E20, E9-E21, E10-E22, E11-E24, E57-E23
SW1=OPEN
SW2=CLOSED
SW3=OPEN
SW4=OPEN

DEVICE: V108 UTILITY MODULE
BLDG #: 1002B
RACK #: R02B09
CHASSIS ID: CFE-2B-PS3
SLOT #: 3
A24 BASE ADDRESS: 0XF0004000

ASSY# 94028094

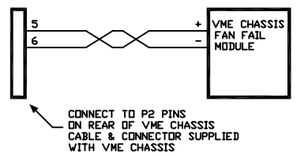

-3	-2	-1	REF DESIGNATOR	ITEM NO.	DESCRIPTION	MAT'L DWG NO./ENG. NO.
QTY REQD						

INTERPRET IN GENERAL ACCORDANCE WITH ASME Y14.24M-1989
UNLESS OTHERWISE SPECIFIED DIMENSIONS ARE IN INCHES
DECIMAL TOLERANCES .X ±.030 .XX ±.015 .XXX ±.005
ANGULAR TOLERANCE ± .5°
FINISH: NA
BREAK SHARP EDGES MAX. XX MIN. XX
OUTSTANDING ECN

Q.A. CATEGORY A-3		DATE
DRAWN BY	Koropsak	6/30/03
CHECKED BY		
DESIGN APPROVAL		
ENGINEER APPROVAL	R. MICHNOFF	10/21/97
SUPVR. APPROVAL		

NEXT ASSEMBLY

BROOKHAVEN NATIONAL LABORATORY
UPTON, N.Y. 11973
RHIC CONTROLS WIRING DIAGRAM
ALCOVE 1002B, VME CHASSIS CFE-2B-PS3
CPU/MEMORY /V108 UTIL MODULE

SIZE	DRAWING NUMBER	REV.
D	94028539	A

MATERIAL: ——— SCALE: NA WEIGHT: – SHEET 53

1 *AUTOCAD

PDF created with FinePrint pdfFactory Pro trial version http://www.fineprint.com

REV.	ZONE	ECN NO.	DATE	BY	CKR	APP.

Controls, C-AD 6/30/2003 1:15 PM 8539_54.dwg

EVENT LINK
BLDG #: 1002B
RACK #: R02B09
FANOUT #: C

OUTPUT
J16

MADC CONTROLLER
RACK#: R02B09
CHASSIS ID: CFE-2B-PS3
SLOT #: 4
A24 BASE ADDRESS: 540000
A32 BASE ADDRESS: 24000000

V113
VME SEL
SYS FAIL
CPU RUN
ADC ERR
EVENTLINK
RESET
EXT TRIG INPUTS 0 1 2 3
SCAN TRIG OUT0
SCAN TRIG OUT1

ASSY# 94028176
LENGTH AS REQUIRED
(TYP 1 PLACE)

P2 INTERFACE RIBBON CABLE
ASSY# 94028218

ASSY# 94028138

MADC A/D MODULE
RACK#: R02B09
CHASSIS ID: CFE-2B-PS3
SLOT #: 5
CONFIGURATION: +/- 10V

V114
CHAN 0 - 15
CHAN 16 - 31
CHAN 32 - 47
CHAN 48 - 63

ASSY# 94028226

MADC MUX A/D IO PANEL
BLDG #: 1002B
RACK #: R02B09
PANEL #: MADC A/D IO PANEL E

ASSY# 94028670 ANALOG OUTPUT
+24V
COM
-24V
FROM BUFFERED MADC I/O POWER SUPPLY REF SH. 2

TO SHEET 55

MADC MUX A/D IO PANEL
BLDG #: 1002B
RACK #: R02B09
PANEL #: MADC A/D IO PANEL F

ASSY# 94028670 ANALOG OUTPUT
+24V
COM
-24V
FROM BUFFERED MADC I/O POWER SUPPLY REF SH. 2

TO SHEET 57

MADC MUX A/D IO PANEL
BLDG #: 1002B
RACK #: R02B09
PANEL #: MADC A/D IO PANEL G

ASSY# 94028607 ANALOG OUTPUT
+24V
COM
-24V
FROM BUFFERED MADC I/O POWER SUPPLY REF SH. 2

TO SHEET 47

MADC MUX A/D IO PANEL
BLDG #: 1002B
RACK #: R02B09
PANEL #: MADC A/D IO PANEL H

ASSY# 94028607 ANALOG OUTPUT
+24V
COM
-24V
FROM BUFFERED MADC I/O POWER SUPPLY REF SH. 2

TO SHEET 31

MADC A/D IO CABLE
ASSY# 94028216
(TYP 4 PLACES)

V113 JUMPERS INSTALLED
E3-E4

V113
BASE ADDRESS DIP SWITCHES
A24 BASE A32 BASE
A18 A19 A20 A21 A22 A23 A24 A25 A26 A27 A28 A29 A30 A31
SW1 SW2
PUSH SWITCH IN DIRECTION SHOWN

V114 JUMPERS INSTALLED
J1, J2, J4, J5, J9
J19, J15, J21
ALL OTHER JUMPERS OUT

EVENT LINK
BLDG #: 1002B
RACK #: R02B09
FANOUT #: C

OUTPUT
J3

MADC CONTROLLER
RACK#: R02B09
CHASSIS ID: CFE-2B-PS3
SLOT #: 13
A24 BASE ADDRESS: 580000
A32 BASE ADDRESS: 28000000

V113
VME SEL
SYS FAIL
CPU RUN
ADC ERR
EVENTLINK
RESET
EXT TRIG INPUTS 0 1 2 3
SCAN TRIG OUT0
SCAN TRIG OUT1

ASSY# 94028176
LENGTH AS REQUIRED
(TYP 1 PLACE)

P2 INTERFACE RIBBON CABLE
ASSY# 94028218

ASSY# 94028138

MADC A/D MODULE
RACK#: R02B09
CHASSIS ID: CFE-2B-PS3
SLOT #: 14
CONFIGURATION: +/- 10V

V114
CHAN 0 - 15
CHAN 16 - 31
CHAN 32 - 47
CHAN 48 - 63

ASSY# 94028226

MADC MUX A/D IO PANEL
BLDG #: 1002B
RACK #: R02B08
PANEL #: MADC A/D IO PANEL E

ASSY# 94028670 ANALOG OUTPUT
+24V
COM
-24V
FROM BUFFERED MADC I/O POWER SUPPLY REF SH. 2

TO SHEET 60

MADC MUX A/D IO PANEL
BLDG #: 1002B
RACK #: R02B08
PANEL #: MADC A/D IO PANEL F

ASSY# 94028670 ANALOG OUTPUT
+24V
COM
-24V
FROM BUFFERED MADC I/O POWER SUPPLY REF SH. 2

TO SHEET 62

MADC MUX A/D IO PANEL
BLDG #: 1002B
RACK #: R02B08
PANEL #: MADC A/D IO PANEL G

ASSY# 94028670 ANALOG OUTPUT
+24V
COM
-24V
FROM BUFFERED MADC I/O POWER SUPPLY REF SH. 2

TO SHEET 47

MADC MUX A/D IO PANEL
BLDG #: 1002B
RACK #: R02B08
PANEL #: MADC A/D IO PANEL H

ASSY# 94028670 ANALOG OUTPUT
+24V
COM
-24V
FROM BUFFERED MADC I/O POWER SUPPLY REF SH. 2

TO SHEET 50

MADC A/D IO CABLE
ASSY# 94028216
(TYP 4 PLACES)

V113 JUMPERS INSTALLED
E3-E4

V113
BASE ADDRESS DIP SWITCHES
A24 BASE A32 BASE
A18 A19 A20 A21 A22 A23 A24 A25 A26 A27 A28 A29 A30 A31
SW1 SW2
PUSH SWITCH IN DIRECTION SHOWN

V114 JUMPERS INSTALLED
J1, J2, J4, J5, J9
J19, J15, J21
ALL OTHER JUMPERS OUT

-3	-2	-1	REF DESIGNATOR	ITEM NO.	DESCRIPTION	MAT'L DWG NO./BNL NO.
QTY REQD						

INTERPRET IN GENERAL ACCORDANCE WITH ASME Y14.24M-1989
UNLESS OTHERWISE SPECIFIED DIMENSIONS ARE IN INCHES
DECIMAL TOLERANCES .X ±.030 .XX ±.015 .XXX ±.005
ANGULAR TOLERANCE ± .5°
FINISH NA
BREAK SHARP EDGES MAX. XX MIN. XX
OUTSTANDING ECN
NEXT ASSEMBLY

Q.A. CATEGORY A-3

DRAWN BY	Ed Koropsak	6/30/03
CHECKED BY		
DESIGN APPROVAL		
ENGINEER APPROVAL	R. MICHNOFF	6/30/03
SUPVR. APPROVAL		

DATE

BROOKHAVEN NATIONAL LABORATORY
UPTON, N.Y. 11973

RHIC CONTROLS WIRING DIAGRAM
1002B, VME CHASSIS CFE-2B-PS3
MADC SYSTEM

SIZE D
94028539
DRAWING NUMBER
REV. A
MATERIAL: ——— SCALE: FULL WEIGHT: – SHEET 54

*AUTOCAD

PDF created with FinePrint pdfFactory Pro trial version http://www.fineprint.com

REV.	ZONE	ECN NO.	DATE	BY	CKR	APP.

Controls, C-AD 6/12/2003 11:24 AM 8539_55.dwg

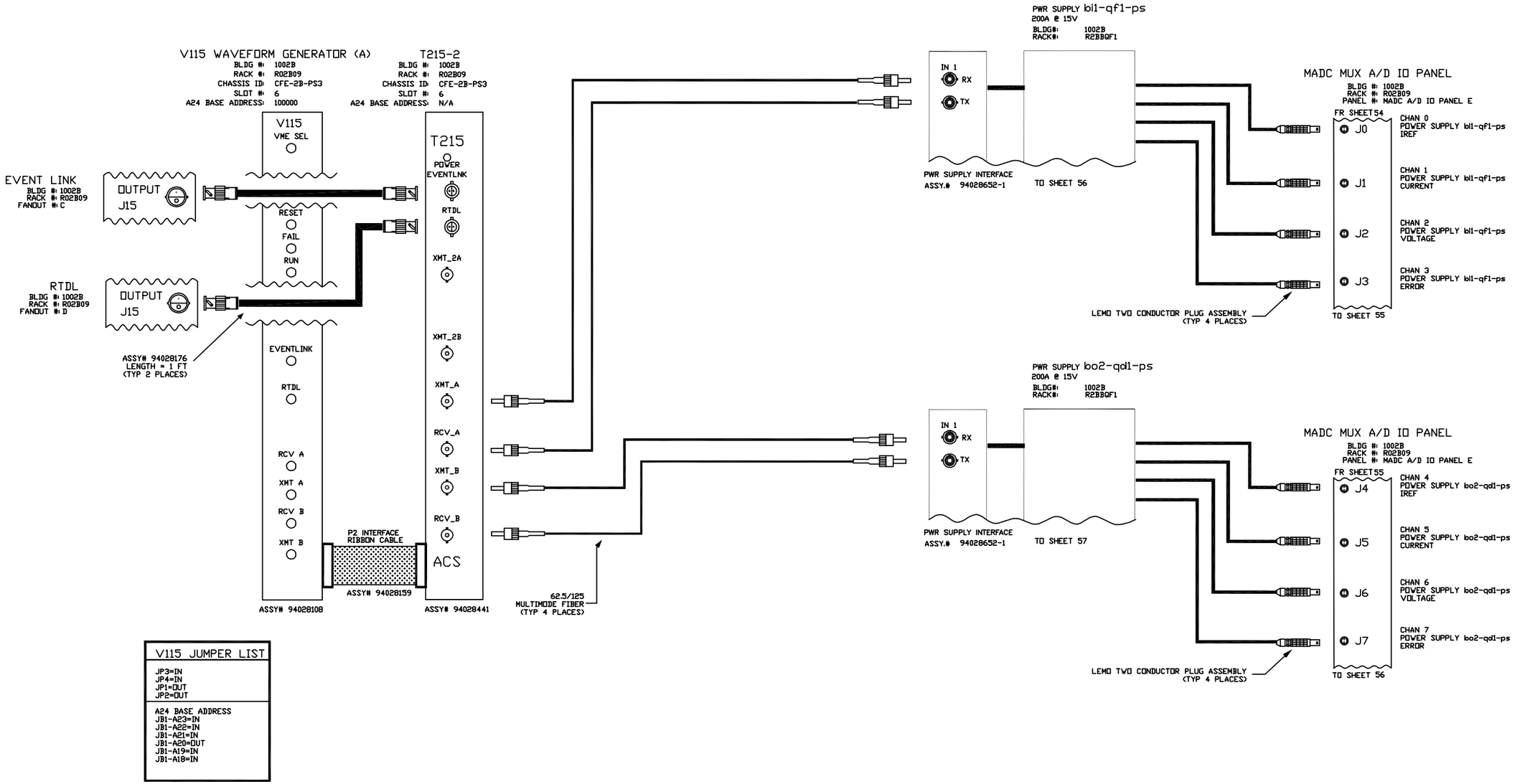

V115 JUMPER LIST
JP3=IN JP4=IN JP1=OUT JP2=OUT
A24 BASE ADDRESS JB1-A23=IN JB1-A22=IN JB1-A21=IN JB1-A20=OUT JB1-A19=IN JB1-A18=IN

-3	-2	-1	REF DESIGNATOR	ITEM NO.	DESCRIPTION	MAT'L DWG NO./MFR. NO.
QTY REQD						

INTERPRET IN GENERAL ACCORDANCE WITH ASME Y14.24M-1989
UNLESS OTHERWISE SPECIFIED DIMENSIONS ARE IN INCHES
DECIMAL TOLERANCES
X ±.030
.XX ±.015
.XXX ±.005
ANGULAR TOLERANCE ± .5°

Q.A. CATEGORY A-3	DATE	BROOKHAVEN NATIONAL LABORATORY
DRAWN BY Ed Koropsak	5/11/98	UPTON, N.Y. 11973
CHECKED BY		RHIC CONTROLS WIRING DIAGRAM
DESIGN APPROVAL		BLDG. 1002B, CFE-2B-PS3
ENGINEER APPROVAL R.MICHNOFF	5/11/98	bi1-qf1-ps/bo2-qd1-ps
SUPVR. APPROVAL		SIZE D — 94028539 — REV. A
NEXT ASSEMBLY		DRAWING NUMBER

OUTSTANDING ECN | NA FINISH | BREAK SHARP EDGES MAX. XX MIN. XX | MATERIAL: ——— | SCALE: NA | WEIGHT: – | SHEET 55

PDF created with FinePrint pdfFactory Pro trial version http://www.fineprint.com

REV.	ZONE	ECN NO.	DATE	BY	CKR	APP.

Controls, C-AD 6/12/2003 11:39 AM 8539_56.dwg

V115 WAVEFORM GENERATOR (B)
BLDG #: 1002B
RACK #: R02B09
CHASSIS ID: CFE-2B-PS3
SLOT #: 7
A24 BASE ADDRESS: 140000

T215-1
BLDG #: 1002B
RACK #: R02B09
CHASSIS ID: CFE-2B-PS3
SLOT #: 7
A24 BASE ADDRESS: N/A

V115
VME SEL
RESET
FAIL
RUN
EVENTLINK
RTDL
RCV A
XMT A
RCV B
XMT B

T215
POWER
EVENTLNK
RTDL
XMT_2A
XMT_2B
XMT_A
RCV_A
XMT_B
RCV_B

ACS

EVENT LINK
BLDG #: 1002B
RACK #: R02B09
FANOUT #: C

OUTPUT
J14

RTDL
BLDG #: 1002B
RACK #: R02B09
FANOUT #: D

OUTPUT
J14

ASSY# 94028176
LENGTH = 1 FT
(TYP 2 PLACES)

P2 INTERFACE
RIBBON CABLE

ASSY# 94028108

ASSY# 94028159

ASSY# 94028441

62.5/125
MULTIMODE FIBER
(TYP 7 PLACES)

DUAL 1 x 4 FIBER OPTIC
COUPLER
BLDG # 1002B
RACK # R02B09
COUPLER # A
FROM SHEET 19

OUTPUT
2B
ASSY # 58030008

PWR SUPPLY bi1-qd2-ps
+/- 100A @ +/- 15V
BLDG#: 1002B
RACK#: R2BBQF2

IN 1 RX
TX
IN 2 RX

PWR SUPPLY INTERFACE
ASSY.# 94028652-1

PWR SUPPLY bi1-qf1-ps
BLDG#: 1002B
RACK#: R2BBQF1

FROM SHEET55

IN 2 RX

PWR SUPPLY INTERFACE
ASSY.# 94028652-1

LEMO TWO CONDUCTOR PLUG ASSEMBLY
(TYP 4 PLACES)

MADC MUX A/D IO PANEL
BLDG #: 1002B
RACK #: R02B09
PANEL #: MADC A/D IO PANEL E
FR SHEET55

J8 CHAN 8
POWER SUPPLY bi1-qd2-ps
IREF

J9 CHAN 9
POWER SUPPLY bi1-qd2-ps
CURRENT

J10 CHAN 10
POWER SUPPLY bi1-qd2-ps
VOLTAGE

J11 CHAN 11
POWER SUPPLY bi1-qd2-ps
ERROR

TO SHEET 56

PWR SUPPLY bi1-qf3-ps
300A @ 15V
BLDG#: 1002B
RACK#: R2BBQF2

IN 1 RX
TX
IN 2 RX

PWR SUPPLY INTERFACE
ASSY.# 94028652-1

LEMO TWO CONDUCTOR PLUG ASSEMBLY
(TYP 4 PLACES)

MADC MUX A/D IO PANEL
BLDG #: 1002B
RACK #: R02B09
PANEL #: MADC A/D IO PANEL E
FR SHEET56

J12 CHAN 12
POWER SUPPLY bi1-qf3-ps
IREF

J13 CHAN 13
POWER SUPPLY bi1-qf3-ps
CURRENT

J14 CHAN 14
POWER SUPPLY bi1-qf3-ps
VOLTAGE

J15 CHAN 15
POWER SUPPLY bi1-qf3-ps
ERROR

V115 JUMPER LIST

JP3=IN
JP4=IN
JP1=OUT
JP2=OUT

A24 BASE ADDRESS
JB1-A23=IN
JB1-A22=IN
JB1-A21=IN
JB1-A20=OUT
JB1-A19=IN
JB1-A18=OUT

-3	-2	-1	REF DESIGNATOR	ITEM NO.	DESCRIPTION	MAT'L DWG NO./DWG. NO.
QTY REQD						

INTERPRET IN GENERAL ACCORDANCE WITH ASME Y14.24M-1989
UNLESS OTHERWISE SPECIFIED DIMENSIONS ARE IN INCHES
DECIMAL TOLERANCES .X ±.030 .XX ±.015 .XXX ±.005
ANGULAR TOLERANCE ± .5°
OUTSTANDING ECN: NA
FINISH: √
BREAK SHARP EDGES MAX. XX MIN. XX

Q.A. CATEGORY	A-3	DATE	
DRAWN BY	Ed Koropsak	5/11/98	
CHECKED BY			
DESIGN APPROVAL			
ENGINEER APPROVAL	R.MICHNOFF	5/11/98	
SUPVR. APPROVAL			

NEXT ASSEMBLY

BROOKHAVEN NATIONAL LABORATORY
UPTON, N.Y. 11973
RHIC CONTROLS WIRING DIAGRAM
BLDG. 1002B, CFE-2B-PS3
bi1-qd2-ps/bi1-qf3-ps

SIZE D | 94028539 | REV. A
DRAWING NUMBER
MATERIAL: —— SCALE: NA WEIGHT: – SHEET 56

*AUTOCAD

PDF created with FinePrint pdfFactory Pro trial version http://www.fineprint.com

REV.	ZONE	ECN NO.	DATE	BY	CKR	APP.

Controls, C-AD 6/12/2003 2:44 PM 8539_57.dwg

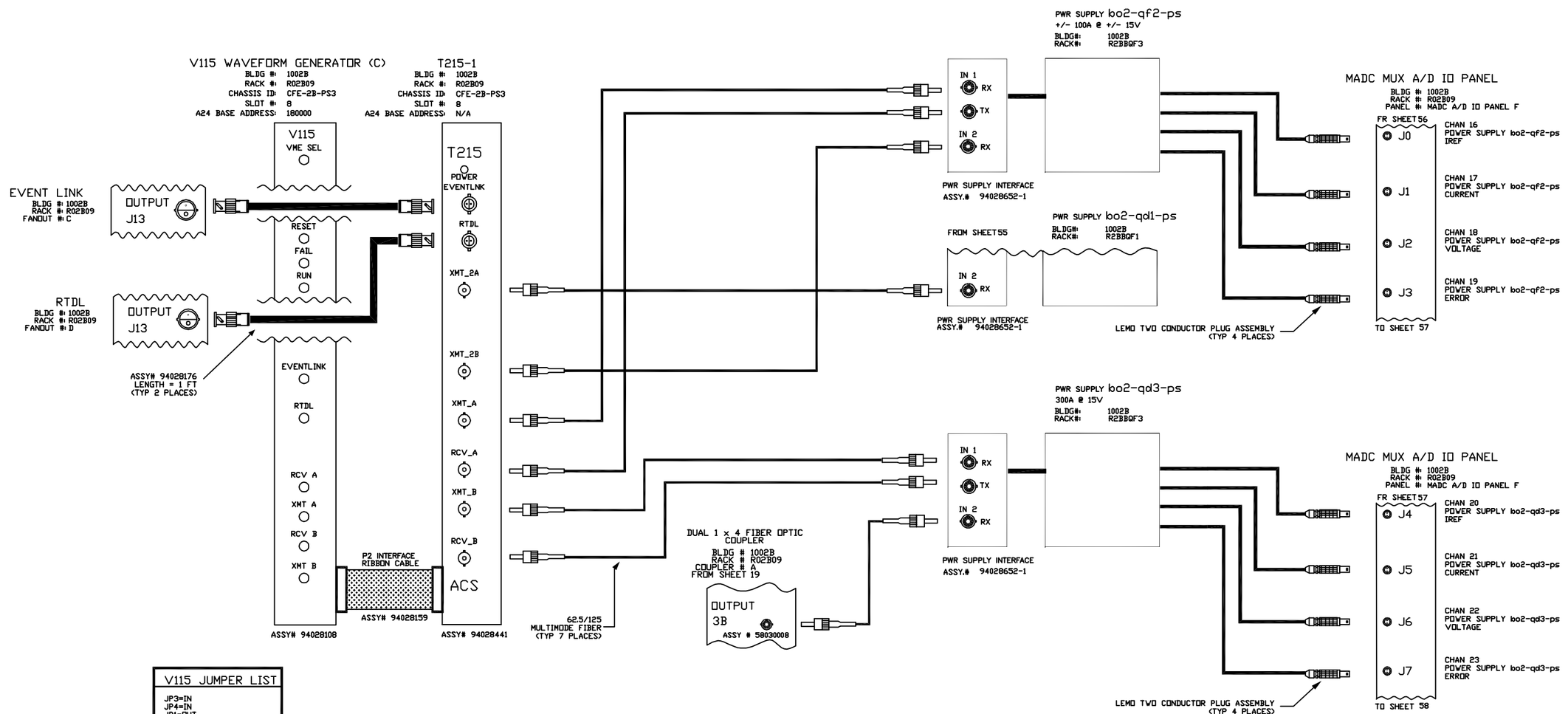

V115 JUMPER LIST
JP3=IN JP4=IN JP1=OUT JP2=OUT
A24 BASE ADDRESS JB1-A23=IN JB1-A22=IN JB1-A21=IN JB1-A20=OUT JB1-A19=OUT JB1-A18=IN

-3	-2	-1	QTY REQD	REF DESIGNATOR	ITEM NO.	DESCRIPTION	MAT'L DWG NO./DWG NO.

INTERPRET IN GENERAL ACCORDANCE WITH ASME Y14.24M–1989

UNLESS OTHERWISE SPECIFIED DIMENSIONS ARE IN INCHES

DECIMAL TOLERANCES
.X ±.030
.XX ±.015
.XXX ±.005
ANGULAR TOLERANCE ± .5°

OUTSTANDING ECN

NA FINISH

BREAK SHARP EDGES MAX. XX MIN. XX

Q.A. CATEGORY	A–3	DATE
DRAWN BY	Ed Koropsak	5/11/98
CHECKED BY		
DESIGN APPROVAL		
ENGINEER APPROVAL	R.MICHNOFF	5/11/98
SUPVR. APPROVAL		

NEXT ASSEMBLY

BROOKHAVEN NATIONAL LABORATORY
UPTON, N.Y. 11973

RHIC CONTROLS WIRING DIAGRAM

BLDG. 1002B, CFE–2B–PS3

bo2–qf2–ps/bo2–qd3–ps

SIZE D — 94028539 — REV. A

DRAWING NUMBER

MATERIAL: —— SCALE: NA WEIGHT: – SHEET 57

1 *AUTOCAD

PDF created with FinePrint pdfFactory Pro trial version http://www.fineprint.com

REV.	ZONE	ECN NO.	DATE	BY	CKR	APP.

Controls, C-AD 6/12/2003 2:52 PM 8539_58.dwg

V115 WAVEFORM GENERATOR (D)
BLDG #: 1002B
RACK #: R02B09
CHASSIS ID: CFE-2B-PS3
SLOT #: 9
A24 BASE ADDRESS: 200000

T215-2
BLDG #: 1002B
RACK #: R02B09
CHASSIS ID: CFE-2B-PS3
SLOT #: 9
A24 BASE ADDRESS: N/A

V115
VME SEL
RESET
FAIL
RUN
EVENTLINK
RTDL
RCV A
XMT A
RCV B
XMT B

T215
POWER
EVENTLNK
RTDL
XMT_2A
XMT_2B
XMT_A
RCV_A
XMT_B
RCV_B
ACS

EVENT LINK
BLDG #: 1002B
RACK #: R02B09
FANOUT #: C
OUTPUT J12

RTDL
BLDG #: 1002B
RACK #: R02B09
FANOUT #: D
OUTPUT J12

ASSY# 94028176
LENGTH = 1 FT
(TYP 2 PLACES)

P2 INTERFACE RIBBON CABLE
ASSY# 94028159

ASSY# 94028108
ASSY# 94028441

62.5/125 MULTIMODE FIBER (TYP 4 PLACES)

PWR SUPPLY bo2-sfx10-ps
Voltage @ Amps
BLDG#: 1002B
RACK#: ?

IN 1
RX
TX

PWR SUPPLY INTERFACE
ASSY.# 94028652-3

MADC MUX A/D IO PANEL
BLDG #: 1002B
RACK #: R02B09
PANEL #: MADC A/D IO PANEL F
FR SHEET57

J8 CHAN 24 POWER SUPPLY bo2-tq5-ps IREF
J9 CHAN 25 POWER SUPPLY bo2-sfx10-ps CURRENT
J10 CHAN 26 POWER SUPPLY bo2-sfx10-ps VOLTAGE
J11 CHAN 27 POWER SUPPLY bo2-sfx10-ps ERROR

TO SHEET 57

LEMO TWO CONDUCTOR PLUG ASSEMBLY (TYP 4 PLACES)

PWR SUPPLY bo2-sxd11-ps
Voltage @ Amps
BLDG#: 1002B
RACK#: ?

IN 1
RX
TX

PWR SUPPLY INTERFACE
ASSY.# 94028652-3

MADC MUX A/D IO PANEL
BLDG #: 1002B
RACK #: R02B09
PANEL #: MADC A/D IO PANEL E
FR SHEET58

J12 CHAN 28 POWER SUPPLY bo2-sxd11-ps IREF
J13 CHAN 29 POWER SUPPLY bo2-sxd11-ps CURRENT
J14 CHAN 30 POWER SUPPLY bo2-sxd11-ps VOLTAGE
J15 CHAN 31 POWER SUPPLY bo2-sxd11-ps ERROR

LEMO TWO CONDUCTOR PLUG ASSEMBLY (TYP 4 PLACES)

V115 JUMPER LIST

JP3=IN JP4=IN JP1=OUT JP2=OUT
A24 BASE ADDRESS JB1-A23=IN JB1-A22=IN JB1-A21=OUT JB1-A20=IN JB1-A19=IN JB1-A18=IN

-3	-2	-1	REF DESIGNATOR	ITEM NO.	DESCRIPTION	MAT'L DWG NO./DWG NO.
QTY REQD						

INTERPRET IN GENERAL ACCORDANCE WITH ASME Y14.24M-1989
UNLESS OTHERWISE SPECIFIED DIMENSIONS ARE IN INCHES
DECIMAL TOLERANCES .X ±.030 .XX ±.015 .XXX ±.005
ANGULAR TOLERANCE ± .5°
FINISH NA
BREAK SHARP EDGES MAX. XX MIN. XX
OUTSTANDING ECN
NEXT ASSEMBLY

Q.A. CATEGORY A-3

DRAWN BY	Ed Koropsak	5/11/98
CHECKED BY		
DESIGN APPROVAL		
ENGINEER APPROVAL	R.MICHNOFF	5/11/98
SUPVR. APPROVAL		

BROOKHAVEN NATIONAL LABORATORY
UPTON, N.Y. 11973
RHIC CONTROLS WIRING DIAGRAM
BLDG. 1002B, CFE-2B-PS3
bo2-sfx10-ps/bo2-sxd11-ps

SIZE D
94028539
REV. A
DRAWING NUMBER
MATERIAL: ——— SCALE: NA WEIGHT: – SHEET 58

8 7 6 5 4 3 2 1 *AUTOCAD

PDF created with FinePrint pdfFactory Pro trial version http://www.fineprint.com

REV.	ZONE	ECN NO.	DATE	BY	CKR	APP.

Controls, C-AD 6/13/2003 9:21 AM 8539_60.dwg

V115 WAVEFORM GENERATOR (H)
BLDG #: 1002B
RACK #: R02B09
CHASSIS ID: CFE-2B-PS3
SLOT #: 15
A24 BASE ADDRESS: 2C0000

T215-2
BLDG #: 1002B
RACK #: R02B09
CHASSIS ID: CFE-2B-PS3
SLOT #: 15
A24 BASE ADDRESS: N/A

V115
VME SEL
RESET
FAIL
RUN
EVENTLINK
RTDL
RCV A
XMT A
RCV B
XMT B

T215
POWER
EVENTLNK
RTDL
XMT_2A
XMT_2B
XMT_A
RCV_A
XMT_B
RCV_B

ACS

EVENT LINK
BLDG #: 1002B
RACK #: R02B09
FANOUT #: C

OUTPUT J6

RTDL
BLDG #: 1002B
RACK #: R02B08
FANOUT #: D

OUTPUT J6

ASSY# 94028176
LENGTH = 1 FT
(TYP 2 PLACES)

P2 INTERFACE RIBBON CABLE
ASSY# 94028159

ASSY# 94028108

ASSY# 94028441

62.5/125 MULTIMODE FIBER (TYP 4 PLACES)

PWR SUPPLY yo1-qd1-ps
200A @ 15V
BLDG#: 1002B
RACK#: R2BYQF1

IN 1
RX
TX

PWR SUPPLY INTERFACE
ASSY.# 94028652-1

TO SHEET 61

MADC MUX A/D IO PANEL
BLDG #: 1002B
RACK #: R02B08
PANEL #: MADC A/D IO PANEL E
FR SHEET 54

J0 CHAN 0 POWER SUPPLY yo1-qd1-ps IREF
J1 CHAN 1 POWER SUPPLY yo1-qd1-ps CURRENT
J2 CHAN 2 POWER SUPPLY yo1-qd1-ps VOLTAGE
J3 CHAN 3 POWER SUPPLY yo1-qd1-ps ERROR

TO SHEET 60

LEMO TWO CONDUCTOR PLUG ASSEMBLY (TYP 4 PLACES)

PWR SUPPLY yi2-qf1-ps
200A @ 15V
BLDG#: 1002B
RACK#: R2BYQF1

IN 1
RX
TX

PWR SUPPLY INTERFACE
ASSY.# 94028652-1

TO SHEET 62

MADC MUX A/D IO PANEL
BLDG #: 1002B
RACK #: R02B08
PANEL #: MADC A/D IO PANEL E
FR SHEET 60

J4 CHAN 4 POWER SUPPLY yi2-qf1-ps IREF
J5 CHAN 5 POWER SUPPLY yi2-qf1-ps CURRENT
J6 CHAN 6 POWER SUPPLY yi2-qf1-ps VOLTAGE
J7 CHAN 7 POWER SUPPLY yi2-qf1-ps ERROR

TO SHEET 61

LEMO TWO CONDUCTOR PLUG ASSEMBLY (TYP 4 PLACES)

V115 JUMPER LIST

JP3=IN
JP4=IN
JP1=OUT
JP2=OUT

A24 BASE ADDRESS
JB1-A23=IN
JB1-A22=IN
JB1-A21=OUT
JB1-A20=IN
JB1-A19=OUT
JB1-A18=OUT

-3	-2	-1	REF DESIGNATOR	ITEM NO.	DESCRIPTION	MAT'L DWG NO./MFR. NO.
QTY REQD						

INTERPRET IN GENERAL ACCORDANCE WITH ASME Y14.24M-1989
UNLESS OTHERWISE SPECIFIED DIMENSIONS ARE IN INCHES
DECIMAL TOLERANCES
X ±.030
.XX ±.015
.XXX ±.005
ANGULAR TOLERANCE ± .5°

OUTSTANDING ECN: NA
FINISH
BREAK SHARP EDGES MAX. XX MIN. XX

Q.A. CATEGORY A-3

DRAWN BY	Ed Koropsak	5/20/98
CHECKED BY		
DESIGN APPROVAL		
ENGINEER APPROVAL	R.MICHNOFF	5/20/98
SUPVR. APPROVAL		

NEXT ASSEMBLY

BROOKHAVEN NATIONAL LABORATORY
UPTON, N.Y. 11973
RHIC CONTROLS WIRING DIAGRAM
BLDG. 1002B, CFE-2B-PS3
yo1-qd1-ps/yi2-qf1-ps

SIZE D | 94028539 | REV. A
DRAWING NUMBER

MATERIAL: ——— SCALE: NA WEIGHT: – SHEET 60

1 *AUTOCAD

PDF created with FinePrint pdfFactory Pro trial version http://www.fineprint.com

REV.	ZONE	ECN NO.	DATE	BY	CKR	APP.

Controls, C-AD 6/13/2003 2:23 PM 8539_61.dwg

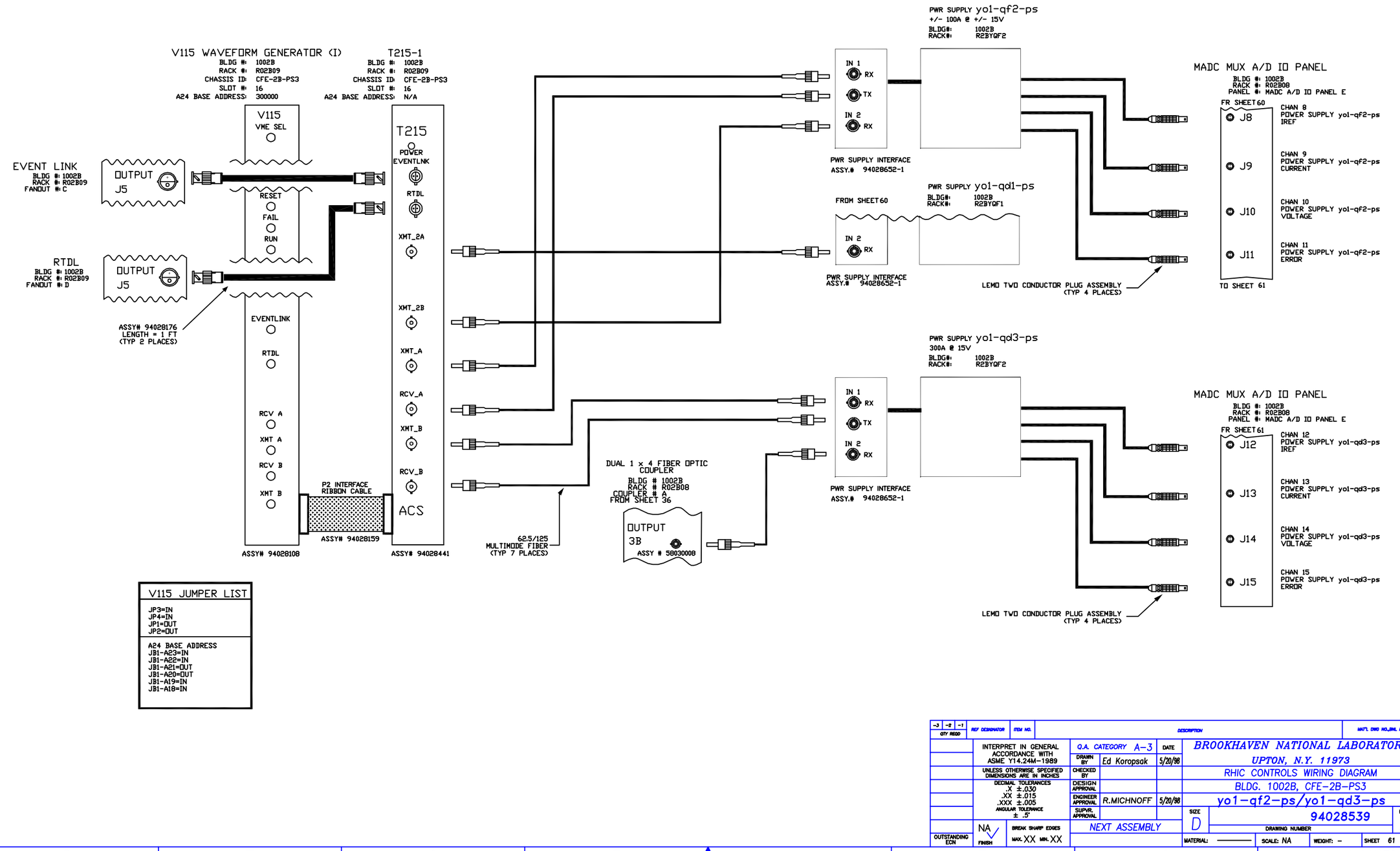

V115 JUMPER LIST
JP3=IN JP4=IN JP1=OUT JP2=OUT
A24 BASE ADDRESS JB1-A23=IN JB1-A22=IN JB1-A21=OUT JB1-A20=OUT JB1-A19=IN JB1-A18=IN

-3	-2	-1	QTY REQD	REF DESIGNATOR	ITEM NO.	DESCRIPTION	MAT'L DWG NO./DWG. NO.

INTERPRET IN GENERAL ACCORDANCE WITH ASME Y14.24M-1989

UNLESS OTHERWISE SPECIFIED DIMENSIONS ARE IN INCHES

DECIMAL TOLERANCES
.X ±.030
.XX ±.015
.XXX ±.005
ANGULAR TOLERANCE
± .5°

OUTSTANDING ECN

NA

FINISH

BREAK SHARP EDGES
MAX. XX MIN. XX

Q.A. CATEGORY A-3		DATE	
DRAWN BY	Ed Koropsak	5/20/98	
CHECKED BY			
DESIGN APPROVAL			
ENGINEER APPROVAL	R.MICHNOFF	5/20/98	
SUPVR. APPROVAL			

NEXT ASSEMBLY

BROOKHAVEN NATIONAL LABORATORY
UPTON, N.Y. 11973

RHIC CONTROLS WIRING DIAGRAM

BLDG. 1002B, CFE-2B-PS3

yo1-qf2-ps/yo1-qd3-ps

SIZE D

94028539

DRAWING NUMBER

REV. A

MATERIAL: ——— SCALE: NA WEIGHT: – SHEET 61

1 *AUTOCAD

PDF created with FinePrint pdfFactory Pro trial version http://www.fineprint.com

REV.	ZONE	ECN NO.	DATE	BY	CKR	APP.

Controls, C-AD 6/13/2003 1:53 PM 8539_62.dwg

V115 WAVEFORM GENERATOR (J)
BLDG #: 1002B
RACK #: R02B09
CHASSIS ID: CFE-2B-PS3
SLOT #: 17
A24 BASE ADDRESS: 340000

T215-1
BLDG #: 1002B
RACK #: R02B09
CHASSIS ID: CFE-2B-PS3
SLOT #: 17
A24 BASE ADDRESS: N/A

V115
VME SEL
RESET
FAIL
RUN
EVENTLINK
RTDL
RCV A
XMT A
RCV B
XMT B

T215
POWER
EVENTLNK
RTDL
XMT_2A
XMT_2B
XMT_A
RCV_A
XMT_B
RCV_B

ACS

EVENT LINK
BLDG #: 1002B
RACK #: R02B09
FANOUT #: C

OUTPUT
J4

RTDL
BLDG #: 1002B
RACK #: R02B09
FANOUT #: D

OUTPUT
J4

ASSY# 94028176
LENGTH = 1 FT
(TYP 2 PLACES)

P2 INTERFACE
RIBBON CABLE
ASSY# 94028159

ASSY# 94028108

ASSY# 94028441

62.5/125
MULTIMODE FIBER
(TYP 7 PLACES)

DUAL 1 x 4 FIBER OPTIC
COUPLER
BLDG # 1002B
RACK # R02B08
COUPLER # A
FROM SHEET 36

OUTPUT
2B
ASSY # 58030008

PWR SUPPLY yi2-qd2-ps
+/- 100A @ +/- 15V
BLDG#: 1002B
RACK#: R2BYQF3

IN 1 RX
TX
IN 2 RX

PWR SUPPLY INTERFACE
ASSY.# 94028652-1

PWR SUPPLY yi2-qf1-ps
BLDG#: 1002B
RACK#: R2BYQF1

FROM SHEET60

IN 2 RX

PWR SUPPLY INTERFACE
ASSY.# 94028652-1

LEMO TWO CONDUCTOR PLUG ASSEMBLY
(TYP 4 PLACES)

MADC MUX A/D IO PANEL
BLDG #: 1002B
RACK #: R02B08
PANEL #: MADC A/D IO PANEL F
FR SHEET54

J0 CHAN 16 POWER SUPPLY yi2-qd2-ps IREF
J1 CHAN 17 POWER SUPPLY yi2-qd2-ps CURRENT
J2 CHAN 18 POWER SUPPLY yi2-qd2-ps VOLTAGE
J3 CHAN 19 POWER SUPPLY yi2-qd2-ps ERROR

TO SHEET 62

PWR SUPPLY yi2-qf3-ps
300A @ 15V
BLDG#: 1002B
RACK#: R2BQF3

IN 1 RX
TX
IN 2 RX

PWR SUPPLY INTERFACE
ASSY.# 94028652-1

LEMO TWO CONDUCTOR PLUG ASSEMBLY
(TYP 4 PLACES)

MADC MUX A/D IO PANEL
BLDG #: 1002B
RACK #: R02B08
PANEL #: MADC A/D IO PANEL F
FR SHEET62

J4 CHAN 20 POWER SUPPLY yi2-qd2-ps IREF
J5 CHAN 21 POWER SUPPLY yi2-qf3-ps CURRENT
J6 CHAN 22 POWER SUPPLY yi2-qf3-ps VOLTAGE
J7 CHAN 23 POWER SUPPLY yi2-qf3-ps ERROR

TO SHEET 63

V115 JUMPER LIST

JP3=IN
JP4=IN
JP1=OUT
JP2=OUT

A24 BASE ADDRESS
JB1-A23=IN
JB1-A22=IN
JB1-A21=OUT
JB1-A20=OUT
JB1-A19=IN
JB1-A18=OUT

-3 QTY REQD	-2 QTY REQD	-1 QTY REQD	REF DESIGNATOR	ITEM NO.	DESCRIPTION	MAT'L DWG NO._DWG NO.

INTERPRET IN GENERAL ACCORDANCE WITH ASME Y14.24M-1989
UNLESS OTHERWISE SPECIFIED DIMENSIONS ARE IN INCHES
DECIMAL TOLERANCES .X ±.030 .XX ±.015 .XXX ±.005
ANGULAR TOLERANCE ± .5°
FINISH NA
BREAK SHARP EDGES MAX. XX MIN. XX
OUTSTANDING ECN

Q.A. CATEGORY A-3

DRAWN BY	Ed Koropsak	5/20/98
CHECKED BY		
DESIGN APPROVAL		
ENGINEER APPROVAL	R.MICHNOFF	5/20/98
SUPVR. APPROVAL		

NEXT ASSEMBLY

BROOKHAVEN NATIONAL LABORATORY
UPTON, N.Y. 11973
RHIC CONTROLS WIRING DIAGRAM
BLDG. 1002B, CFE-2B-PS3
yi2-qd2-ps/yi2-qf3-ps

SIZE D
94028539
REV. A
DRAWING NUMBER
MATERIAL: ——— SCALE: NA WEIGHT: – SHEET 62

*AUTOCAD

PDF created with FinePrint pdfFactory Pro trial version http://www.fineprint.com