RHIC Accelerator Controls Section
Bldg. 1002A Wiring Diagrams
BNL Drawing Number 94028xxx

Brookhaven National Laboratory, Upton, New York 11973

Created By: Ed Koropsak
Last Updated 6/5/03

Power Distribution

🕮 Rack R029, R0210 (Sheet 1)
🕮 Rack R0211 (Sheet 2)

VME Chassis CFE-2A-TVDAMP1 modules

🕮 Front End Computer, V108 Utility Module (Sheet 3)
🕮 Blank (Sheet 4)
🕮 V124-A BLUE HORZ CLKS (Sheet 5)
🕮 V124-B BLUE VERT CLKS (Sheet 6)
🕮 V124-C YEL HORZ CLKS (Sheet 7)
🕮 V124-D YEL VERT CLKS (Sheet 8)
🕮 V129-A BLUE HORZ DAMPER (Sheet 9)
🕮 V129-B BLUE VERT DAMPER (Sheet 10)
🕮 V129-C YEL HORZ DAMPER (Sheet 11)
🕮 V129-D YEL VERT DAMPER (Sheet 12)
🕮 V128 MODULES (Sheet 13)
🕮 BLUE/Beam Pickups (Sheet 14)
🕮 YEL/Beam Pickups (Sheet 15)
🕮 Kicker RF Layout (Sheet 16)
🕮 BIT-3 Bus Extender (Sheet 33)

VME Chassis CEX-2A-TVDAMP1 modules

🕮 BIT-3 Bus Extender (Sheet 33)
🕮 V189 ECL to TTL (Sheet 19)
🕮 NIM Module Blue HORZ (Sheet 20)
🕮 NIM Module Blue VERT (Sheet 21)
🕮 NIM Module Yellow HORZ (Sheet 22)
🕮 NIM Module Yellow VERT (Sheet 23)
🕮 HP E1366A MUX A-H (Sheet 24-27)
🕮 1160A-200 Digital Input Prog. Attn.(Sheet 28)
🕮 2170A-210 Digital Output HV PS (Sheet 29)
🕮 Blank (Sheet 17)
🕮 Wiring TB3 (Sheet 18)
🕮 2170A-210 Digital Output Attn Cont. (Sheet 30-31)
🕮 2170A & 1160A Digital I/O for NIM Mod (Sheet 32)

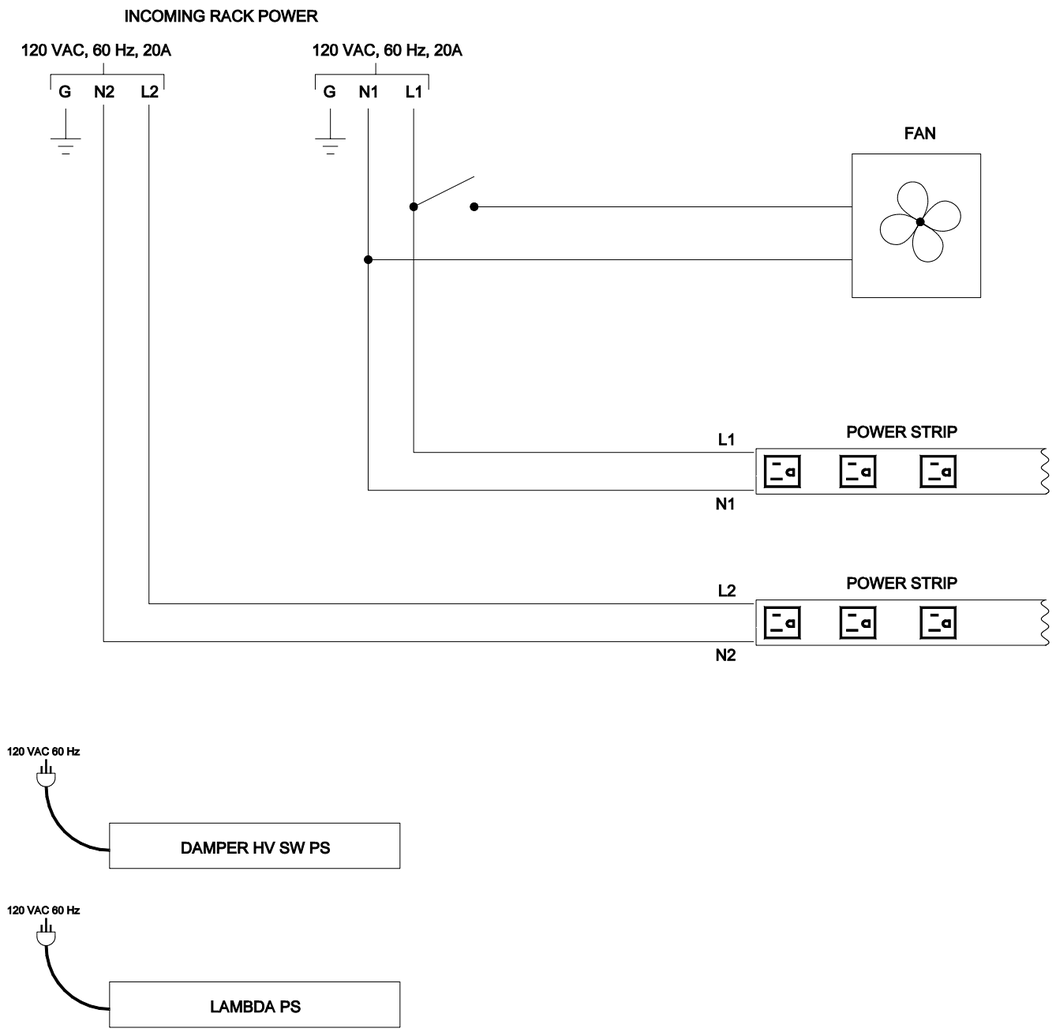

NOTE: ALL 120 VAC, 60 Hz POWER CORDS
PLUG INTO POWER STRIP OUTLETS

RACK R029

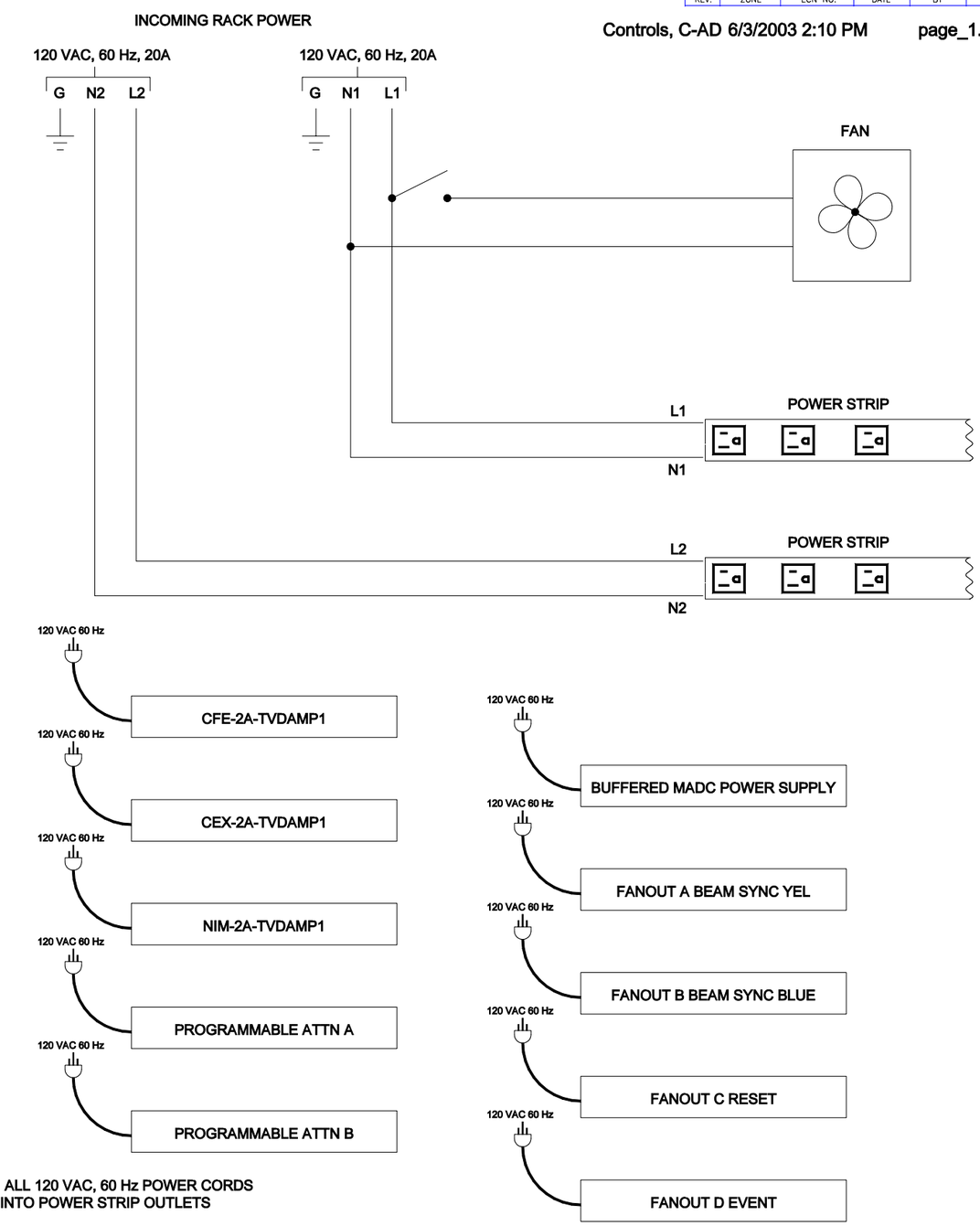

NOTE: ALL 120 VAC, 60 Hz POWER CORDS
PLUG INTO POWER STRIP OUTLETS

RACK R0210

REV.	ZONE	ECN NO.	DATE	BY	CKR	APP.

Controls, C-AD 6/3/2003 2:10 PM page_1.dwg

-3	-2	-1	REF DESIGNATOR	ITEM NO.	DESCRIPTION	MAT'L DWG NO.,BNL NO.
QTY REQD						

INTERPRET IN GENERAL ACCORDANCE WITH ASME Y14.24M-1989	Q.A. CATEGORY A-3	DATE	BROOKHAVEN NATIONAL LABORATORY
	DRAWN BY Ed Koropsak	5/13/03	UPTON, N.Y. 11973
UNLESS OTHERWISE SPECIFIED DIMENSIONS ARE IN INCHES	CHECKED BY		RHIC CONTROLS WIRING DIAGRAM
DECIMAL TOLERANCES .X ±.030 .XX ±.015 .XXX ±.005 ANGULAR TOLERANCE ± .5°	DESIGN APPROVAL		SERVICE BLDG. 1002A DAMPER
	ENGINEER APPROVAL Rob Michnoff		RACK R029, R0210
	SUPVR. APPROVAL		SIZE D / 94028XXX / REV. A
NA FINISH / BREAK SHARP EDGES MAX. XX MIN. XX	NEXT ASSEMBLY		DRAWING NUMBER
OUTSTANDING ECN			MATERIAL: / SCALE: NA / WEIGHT: / SHEET 1

1 *AUTOCAD

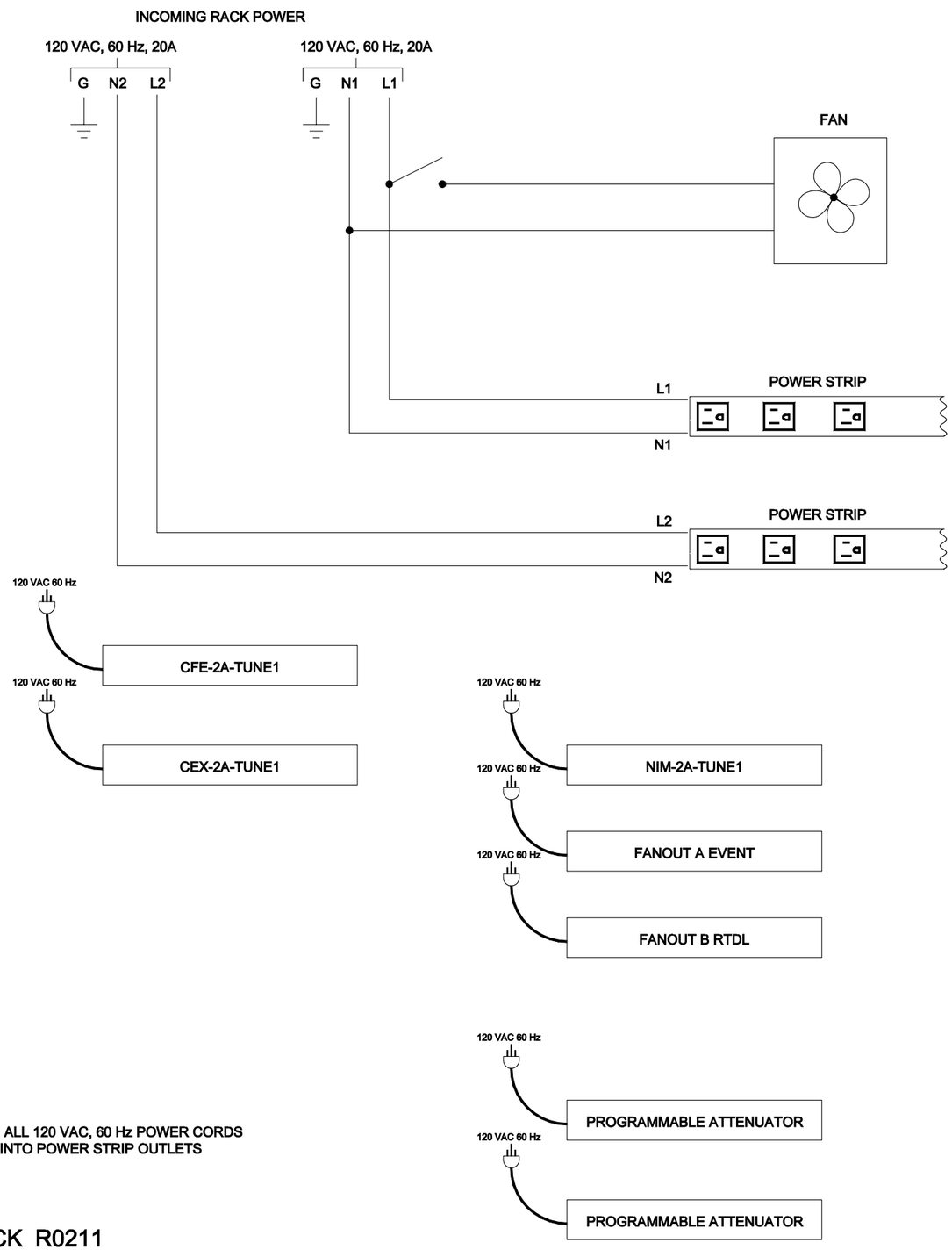

NOTE: ALL 120 VAC, 60 Hz POWER CORDS
PLUG INTO POWER STRIP OUTLETS

RACK R0211

REV.	ZONE	ECN NO.	DATE	BY	CKR	APP.

-3	-2	-1	REF DESIGNATOR	ITEM NO.	DESCRIPTION	MAT'L DWG NO./BNL NO.
QTY REQD						

INTERPRET IN GENERAL ACCORDANCE WITH ASME Y14.24M-1989

UNLESS OTHERWISE SPECIFIED DIMENSIONS ARE IN INCHES

DECIMAL TOLERANCES
.X ±.030
.XX ±.015
.XXX ±.005
ANGULAR TOLERANCE ± .5°

NA FINISH

BREAK SHARP EDGES MAX. XX MIN. XX

OUTSTANDING ECN

Q.A. CATEGORY A-3		DATE
DRAWN BY	Ed Koropsak	5/13/03
CHECKED BY		
DESIGN APPROVAL		
ENGINEER APPROVAL	Rob Michnoff	
SUPVR. APPROVAL		

NEXT ASSEMBLY

BROOKHAVEN NATIONAL LABORATORY
UPTON, N.Y. 11973

RHIC CONTROLS WIRING DIAGRAM
SERVICE BLDG. 1002A DAMPER
RACK R0211

SIZE D | DRAWING NUMBER 94028XXX | REV. A

MATERIAL: | SCALE: NA | WEIGHT: | SHEET 2

1 *AUTOCAD

REV.	ZONE	ECN NO.	DATE	BY	CKR	APP.

Controls, C-AD 6/2/2003 3:53 PM page_3.dwg

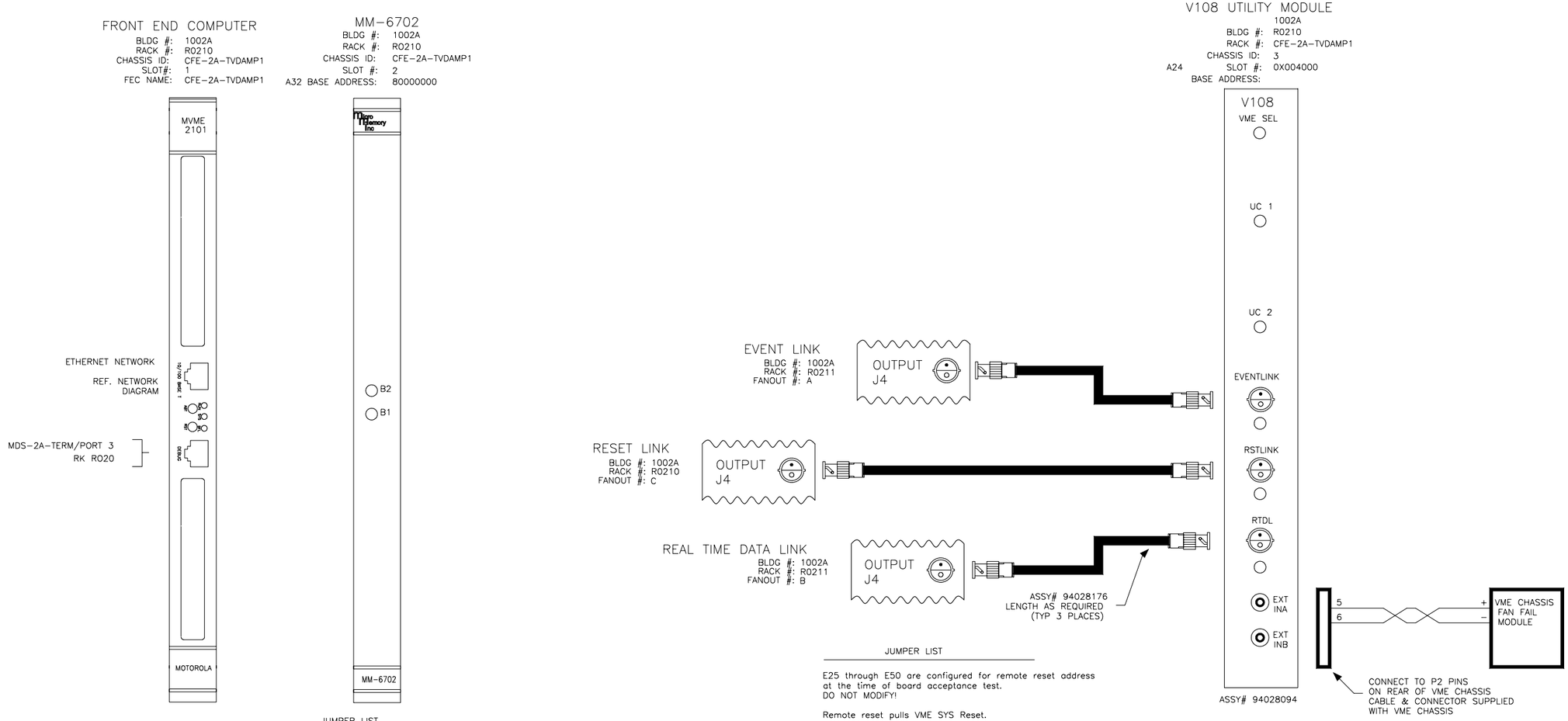

JUMPER LIST

1. REMOVE E1.
2. INSTALL E15.
3. SW3 CLOSE ALL POSITIONS. LOWER LIMIT=XX000000
4. SW2 CLOSE POSITIONS 7 AND 8. UPPER LIMIT=XX3FFFFE
5. SW1 CLOSE POSITION 1. BASE=80XXXXXX
6. INSTALL E14 AND E25 TO ENABLE BATTERIES
7. SW4 ALL OPEN.
8. SW5 ALL OPEN.
9. SW6 ALL OPEN.

JUMPER LIST

E25 through E50 are configured for remote reset address at the time of board acceptance test.
DO NOT MODIFY!

Remote reset pulls VME SYS Reset.
E58-E60, E59-E61

A24 BASE ADDRESS= 4000h
E57-E13, E2-E14, E3-E15, E4-E16, E5-E17, E6-E18
E7-E19, E8-E20, E9-E21, E10-E22, E11-E24, E57-E23
SW1=OPEN
SW2=CLOSED
SW3=OPEN
SW4=OPEN

-3	-2	-1	REF DESIGNATOR	ITEM NO.	DESCRIPTION	MAT'L DWG NO./BNL NO.
QTY REQD						

INTERPRET IN GENERAL ACCORDANCE WITH ASME Y14.24M-1989

UNLESS OTHERWISE SPECIFIED DIMENSIONS ARE IN INCHES

DECIMAL TOLERANCES
.X ±.030
.XX ±.015
.XXX ±.005
ANGULAR TOLERANCE
± .5°

NA FINISH

BREAK SHARP EDGES
MAX. XX MIN. XX

OUTSTANDING ECN

Q.A. CATEGORY A-3		DATE
DRAWN BY	Ed Koropsak	5/29/03
CHECKED BY		
DESIGN APPROVAL		
ENGINEER APPROVAL	Rob Michnoff	
SUPVR. APPROVAL		

NEXT ASSEMBLY

BROOKHAVEN NATIONAL LABORATORY
UPTON, N.Y. 11973

RHIC CONTROLS

SERVICE BLDG. 1002A DAMPER

FT END COMP/V108 UTIL MODULE

SIZE D | DRAWING NUMBER 94028XXX | REV. A

MATERIAL: | SCALE: NA | WEIGHT: | SHEET 3

1 *AUTOCAD

REV.	ZONE	ECN NO.	DATE	BY	CKR	APP.

Controls, C-AD 6/2/2003 8:42 AM page_4.dwg

-3	-2	-1	REF DESIGNATOR	ITEM NO.	DESCRIPTION	MAT'L DWG NO._BNL NO.
QTY REQD						

INTERPRET IN GENERAL ACCORDANCE WITH ASME Y14.24M-1989

UNLESS OTHERWISE SPECIFIED DIMENSIONS ARE IN INCHES

DECIMAL TOLERANCES
.X ±.030
.XX ±.015
.XXX ±.005
ANGULAR TOLERANCE
± .5°

NA FINISH

BREAK SHARP EDGES
MAX. XX MIN. XX

OUTSTANDING ECN

Q.A. CATEGORY A-3		DATE
DRAWN BY	Ed Koropsak	5/29/03
CHECKED BY		
DESIGN APPROVAL		
ENGINEER APPROVAL	Rob Michnoff	
SUPVR. APPROVAL		
NEXT ASSEMBLY		

BROOKHAVEN NATIONAL LABORATORY
UPTON, N.Y. 11973

RHIC CONTROLS

SERVICE BLDG. 1002A DAMPER

BLANK

SIZE D

94028XXX

DRAWING NUMBER

REV. A

MATERIAL: SCALE: NA WEIGHT: SHEET 4

*AUTOCAD

REV.	ZONE	ECN NO.	DATE	BY	CKR	APP.

Controls, C-AD 6/4/2003 3:31 PM page_5.dwg

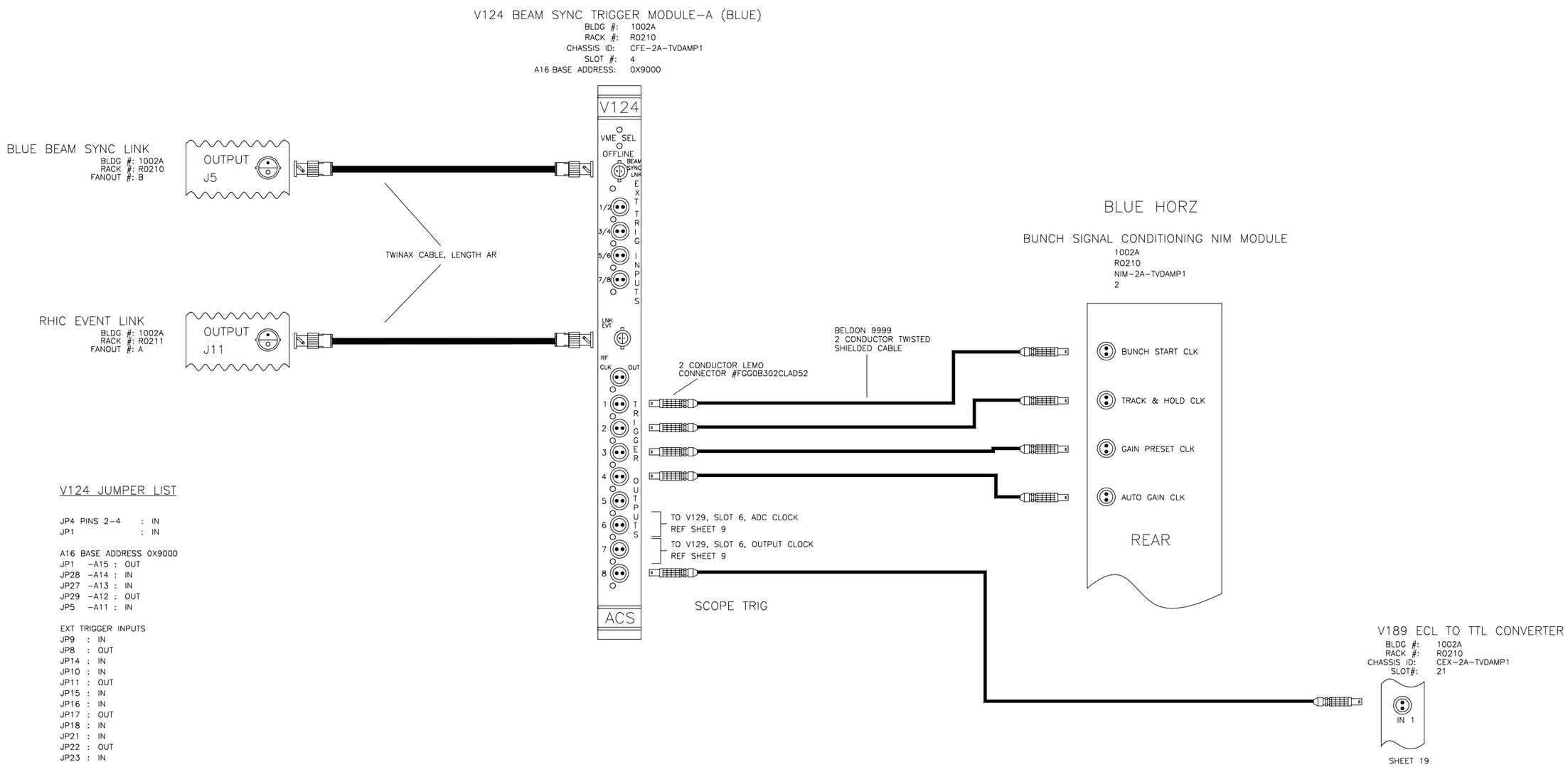

V124 JUMPER LIST

JP4 PINS 2-4 : IN
JP1 : IN

A16 BASE ADDRESS 0X9000
JP1 -A15 : OUT
JP28 -A14 : IN
JP27 -A13 : IN
JP29 -A12 : OUT
JP5 -A11 : IN

EXT TRIGGER INPUTS
JP9 : IN
JP8 : OUT
JP14 : IN
JP10 : IN
JP11 : OUT
JP15 : IN
JP16 : IN
JP17 : OUT
JP18 : IN
JP21 : IN
JP22 : OUT
JP23 : IN

TRIGGER OUTPUTS
ALL : IN

-3	-2	-1	REF DESIGNATOR	ITEM NO.	DESCRIPTION	MAT'L DWG NO.,BRNL NO.
QTY REQD						

INTERPRET IN GENERAL ACCORDANCE WITH ASME Y14.24M-1989

UNLESS OTHERWISE SPECIFIED DIMENSIONS ARE IN INCHES

DECIMAL TOLERANCES
.X ±.030
.XX ±.015
.XXX ±.005
ANGULAR TOLERANCE
± .5°

NA FINISH

BREAK SHARP EDGES
MAX. XX MIN. XX

OUTSTANDING ECN

Q.A. CATEGORY A-3		DATE
DRAWN BY	Ed Koropsak	5/6/03
CHECKED BY		
DESIGN APPROVAL		
ENGINEER APPROVAL	Rob Michnoff	
SUPVR. APPROVAL		

NEXT ASSEMBLY

BROOKHAVEN NATIONAL LABORATORY
UPTON, N.Y. 11973
RHIC CONTROLS
SERVICE BLDG. 1002A DAMPER
V124_BLUE (A MODULE)

SIZE D
94028xxx
DRAWING NUMBER
REV. A

MATERIAL: SCALE: NA WEIGHT: SHEET 5

1 *AUTOCAD

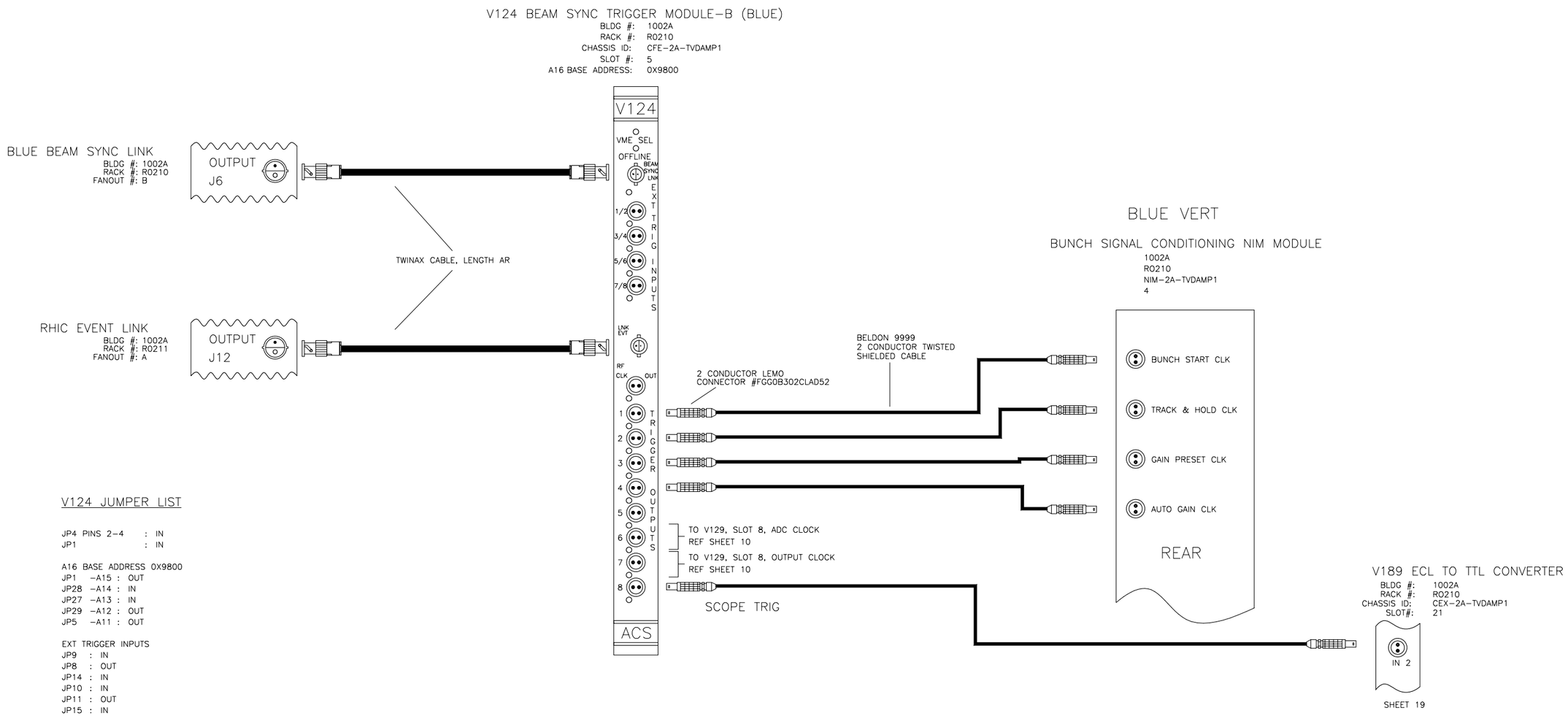

V124 JUMPER LIST

JP4 PINS 2-4 : IN
JP1 : IN

A16 BASE ADDRESS 0X9800
JP1 -A15 : OUT
JP28 -A14 : IN
JP27 -A13 : IN
JP29 -A12 : OUT
JP5 -A11 : OUT

EXT TRIGGER INPUTS
JP9 : IN
JP8 : OUT
JP14 : IN
JP10 : IN
JP11 : OUT
JP15 : IN
JP16 : IN
JP17 : OUT
JP18 : IN
JP21 : IN
JP22 : OUT
JP23 : IN

TRIGGER OUTPUTS
ALL : IN

-3	-2	-1	REF DESIGNATOR	ITEM NO.	DESCRIPTION	MAT'L DWG NO./BNL NO.
QTY REQD						

INTERPRET IN GENERAL ACCORDANCE WITH ASME Y14.24M-1989

UNLESS OTHERWISE SPECIFIED DIMENSIONS ARE IN INCHES

DECIMAL TOLERANCES
.X ±.030
.XX ±.015
.XXX ±.005
ANGULAR TOLERANCE
± .5°

NA FINISH

BREAK SHARP EDGES
MAX. XX MIN. XX

OUTSTANDING ECN

Q.A. CATEGORY A-3		DATE
DRAWN BY	Ed Koropsak	5/7/03
CHECKED BY		
DESIGN APPROVAL		
ENGINEER APPROVAL	Rob Michnoff	
SUPVR. APPROVAL		

NEXT ASSEMBLY

BROOKHAVEN NATIONAL LABORATORY
UPTON, N.Y. 11973
RHIC CONTROLS
SERVICE BLDG. 1002A DAMPER
V124_BLUE (B MODULE)

SIZE D
94028xxx
DRAWING NUMBER
REV. A

MATERIAL:
SCALE: NA
WEIGHT:
SHEET 6

*AUTOCAD

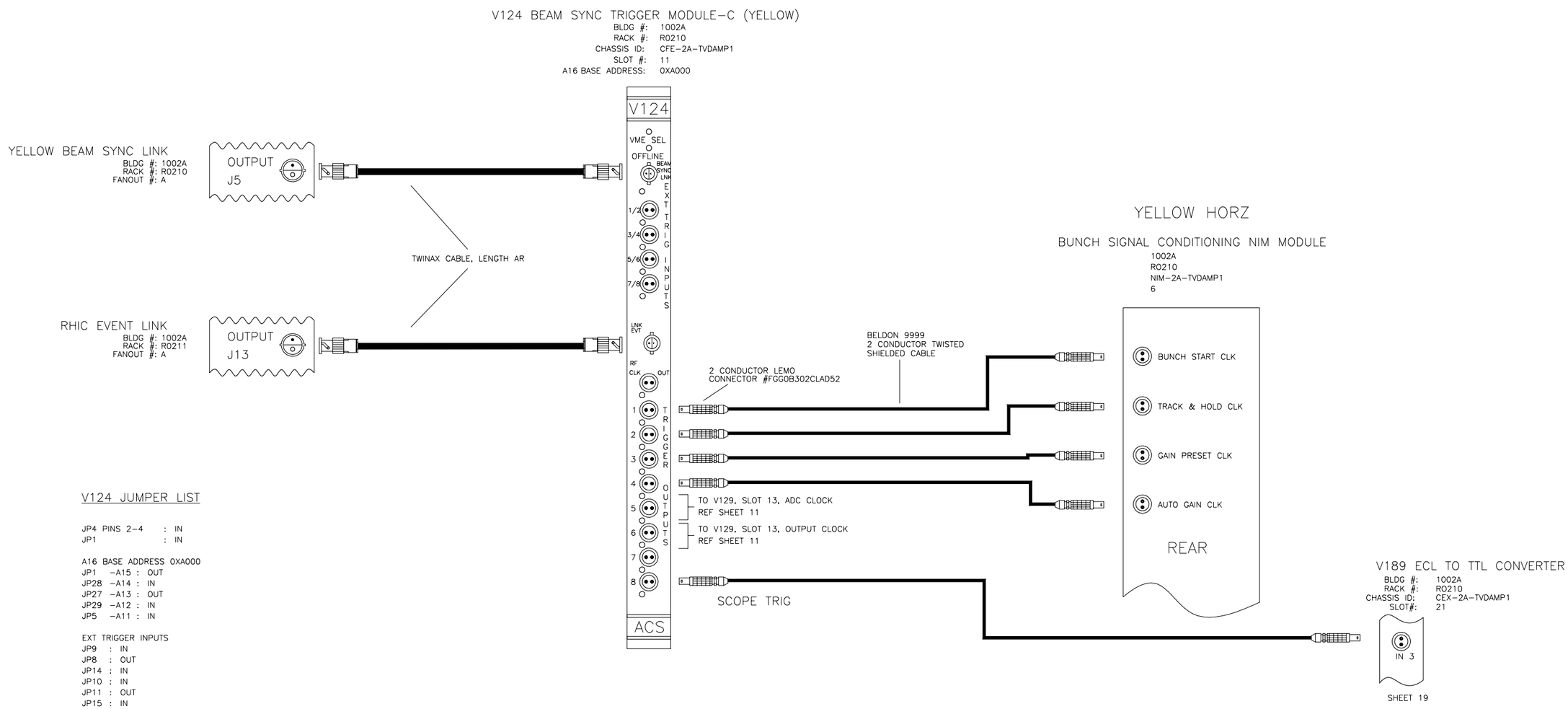

V124 JUMPER LIST

JP4 PINS 2-4 : IN
JP1 : IN

A16 BASE ADDRESS 0XA000
JP1 -A15 : OUT
JP28 -A14 : IN
JP27 -A13 : OUT
JP29 -A12 : IN
JP5 -A11 : IN

EXT TRIGGER INPUTS
JP9 : IN
JP8 : OUT
JP14 : IN
JP10 : IN
JP11 : OUT
JP15 : IN
JP16 : IN
JP17 : OUT
JP18 : IN
JP21 : IN
JP22 : OUT
JP23 : IN

TRIGGER OUTPUTS
ALL : IN

-3	-2	-1	REF DESIGNATOR	ITEM NO.	DESCRIPTION	MAT'L DWG NO./BNL NO.
QTY REQD						

INTERPRET IN GENERAL ACCORDANCE WITH ASME Y14.24M-1989

UNLESS OTHERWISE SPECIFIED DIMENSIONS ARE IN INCHES

DECIMAL TOLERANCES
.X ±.030
.XX ±.015
.XXX ±.005
ANGULAR TOLERANCE
± .5°

NA FINISH

BREAK SHARP EDGES
MAX. XX MIN. XX

OUTSTANDING ECN

Q.A. CATEGORY A-3		DATE
DRAWN BY	Ed Koropsak	5/7/03
CHECKED BY		
DESIGN APPROVAL		
ENGINEER APPROVAL	Rob Michnoff	
SUPVR. APPROVAL		
NEXT ASSEMBLY		

BROOKHAVEN NATIONAL LABORATORY
UPTON, N.Y. 11973
RHIC CONTROLS
SERVICE BLDG. 1002A DAMPER
V124_YELLOW (C MODULE)

SIZE D
94028xxx
DRAWING NUMBER
REV. A

MATERIAL:
SCALE: NA
WEIGHT:
SHEET 7

1 *AUTOCAD

REV.	ZONE	ECN NO.	DATE	BY	CKR	APP.

Controls, C-AD 6/2/2003 9:12 AM page_8.dwg

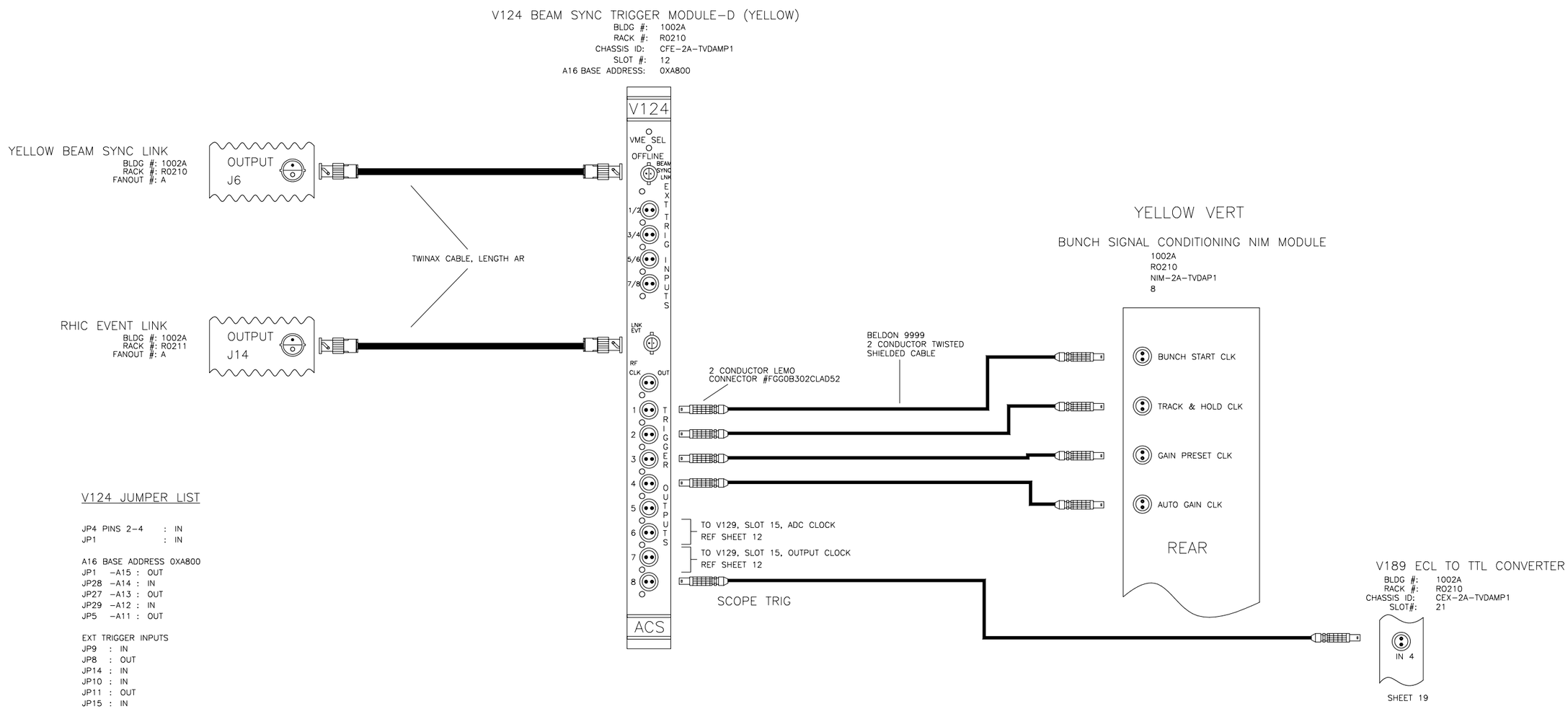

V124 JUMPER LIST

JP4 PINS 2-4 : IN
JP1 : IN

A16 BASE ADDRESS 0XA800
JP1 -A15 : OUT
JP28 -A14 : IN
JP27 -A13 : OUT
JP29 -A12 : IN
JP5 -A11 : OUT

EXT TRIGGER INPUTS
JP9 : IN
JP8 : OUT
JP14 : IN
JP10 : IN
JP11 : OUT
JP15 : IN
JP16 : IN
JP17 : OUT
JP18 : IN
JP21 : IN
JP22 : OUT
JP23 : IN

TRIGGER OUTPUTS
ALL : IN

-3	-2	-1	REF DESIGNATOR	ITEM NO.	DESCRIPTION	MAT'L DWG NO./BNL NO.
QTY REQD						

INTERPRET IN GENERAL ACCORDANCE WITH ASME Y14.24M-1989

UNLESS OTHERWISE SPECIFIED DIMENSIONS ARE IN INCHES

DECIMAL TOLERANCES
.X ±.030
.XX ±.015
.XXX ±.005
ANGULAR TOLERANCE
± .5°

NA FINISH

BREAK SHARP EDGES
MAX. XX MIN. XX

OUTSTANDING ECN

Q.A. CATEGORY A-3

		DATE
DRAWN BY	Ed Koropsak	5/7/03
CHECKED BY		
DESIGN APPROVAL		
ENGINEER APPROVAL	Rob Michnoff	
SUPVR. APPROVAL		

NEXT ASSEMBLY

BROOKHAVEN NATIONAL LABORATORY
UPTON, N.Y. 11973

RHIC CONTROLS

SERVICE BLDG. 1002A DAMPER

V124_YELLOW (D MODULE)

SIZE D | DRAWING NUMBER 94028826 | REV. A

MATERIAL: | SCALE: NA | WEIGHT: | SHEET 8

1 *AUTOCAD

REV.	ZONE	ECN NO.	DATE	BY	CKR	APP.

Controls, C-AD 6/2/2003 3:55 PM page_9.dwg

V129-A BLUE HORZ
BLDG #: 1002A
RACK #: R0210
CHASSIS ID: CFE-2A-TVDAMP1
SLOT #: 6 & 7
A16 BASE ADDRESS: 0x0200

RHIC EVENT LINK
BLDG #: 1002A
RACK #: R0210
FANOUT #: D

V124-A BLUE HORZ
BLDG #: 1002A
RACK #: R0210
CHASSIS ID: CFE-2A-TVDAMP1
SLOT #: 4

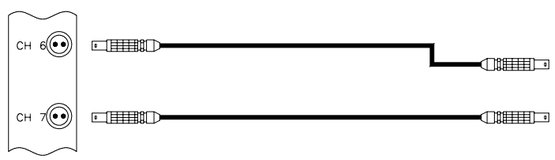

FROM NIM-2A-TVDAMP1, SLOT 2
REF SHEET 14

FROM NIM-2A-TVDAMP1, SLOT 2
REF SHEET 14

TO V128, CFE-2A-TVDAMP1, SLOT 10, INPUT 1
REF SHEET 13

TO V128, CFE-2A-TVDAMP1, SLOT 10, INPUT 3
REF SHEET 13

V129 JUMPER LIST
A15 8-9=IN
A14 7-10=IN
A13 6-11=IN
A12 5-12=IN
A11 4-13=IN
A10 3-14=IN
A9 2-5=OUT
A8 1-16=IN

JTAG JUMPERS
JP1=IN
JP3=IN

PLL JUMPER
JP4=IN

OUT=1/IN=0

-3	-2	-1	REF DESIGNATOR	ITEM NO.	DESCRIPTION	MAT'L DWG NO.,BNL NO.
QTY REQD						

INTERPRET IN GENERAL ACCORDANCE WITH ASME Y14.24M-1989
UNLESS OTHERWISE SPECIFIED DIMENSIONS ARE IN INCHES
DECIMAL TOLERANCES
.X ±.030
.XX ±.015
.XXX ±.005
ANGULAR TOLERANCE ± .5°
NA FINISH
BREAK SHARP EDGES MAX. XX MIN. XX
OUTSTANDING ECN

Q.A. CATEGORY A-3
DRAWN BY Ed Koropsak 6/2/03
CHECKED BY
DESIGN APPROVAL
ENGINEER APPROVAL Rob Michnoff
SUPVR. APPROVAL
NEXT ASSEMBLY

BROOKHAVEN NATIONAL LABORATORY
UPTON, N.Y. 11973
RHIC CONTROLS
SERVICE BLDG. 1002A DAMPER
V129 A MODULE BLUE HORZ
SIZE D
94028xxx
DRAWING NUMBER
REV. A
MATERIAL:
SCALE: NA
WEIGHT:
SHEET 9

1 *AUTOCAD

REV.	ZONE	ECN NO.	DATE	BY	CKR	APP.

Controls, C-AD 6/4/2003 3:38 PM page_10.dwg

V129-B BLUE VERT
BLDG #: 1002A
RACK #: R0210
CHASSIS ID: CFE-2A-TVDAMP1
SLOT #: 8 & 9
A16 BASE ADDRESS: 0x0400

RHIC EVENT LINK
BLDG #: 1002A
RACK #: R0210
FANOUT #: D

V124-B BLUE VERT
BLDG #: 1002A
RACK #: R0210
CHASSIS ID: CFE-2A-TVDAMP1
SLOT #: 5

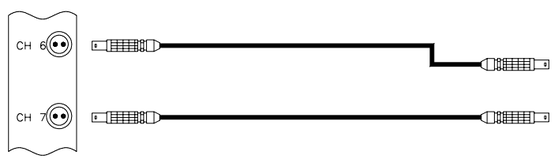

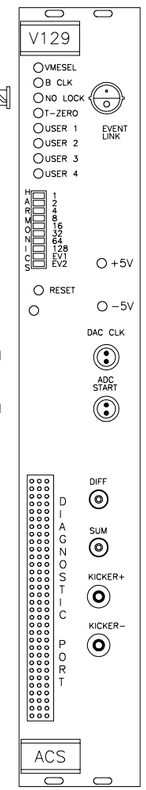

FROM NIM-2A-TVDAMP1, SLOT 4
REF SHEET 14

FROM NIM-2A-TVDAMP1, SLOT 4
REF SHEET 14

TO V128, CFE-2A-TVDAMP1, SLOT 10, INPUT 5
REF SHEET 13

TO V128, CFE-2A-TVDAMP1, SLOT 10, INPUT 7
REF SHEET 13

V129 JUMPER LIST
A15 8-9=IN
A14 7-10=IN
A13 6-11=IN
A12 5-12=IN
A11 4-13=IN
A10 3-14=OUT
A9 2-5=IN
A8 1-16=IN

JTAG JUMPERS
JP1=IN
JP3=IN

PLL JUMPER
JP4=IN

OUT=1/IN=0

-3	-2	-1	REF DESIGNATOR	ITEM NO.	DESCRIPTION	MAT'L DWG NO.,BNL NO.
QTY REQD						

INTERPRET IN GENERAL ACCORDANCE WITH ASME Y14.24M-1989
UNLESS OTHERWISE SPECIFIED DIMENSIONS ARE IN INCHES
DECIMAL TOLERANCES
.X ±.030
.XX ±.015
.XXX ±.005
ANGULAR TOLERANCE
± .5°
NA FINISH
BREAK SHARP EDGES
MAX. XX MIN. XX
OUTSTANDING ECN

Q.A. CATEGORY A-3
DRAWN BY Ed Koropsak 6/2/03
CHECKED BY
DESIGN APPROVAL
ENGINEER APPROVAL Rob Michnoff
SUPVR. APPROVAL
NEXT ASSEMBLY

BROOKHAVEN NATIONAL LABORATORY
UPTON, N.Y. 11973
RHIC CONTROLS
SERVICE BLDG. 1002A DAMPER
V129 B MODULE BLUE VERT
SIZE D
94028xxx
DRAWING NUMBER
REV. A
MATERIAL:
SCALE: NA
WEIGHT:
SHEET 10

1 *AUTOCAD

REV.	ZONE	ECN NO.	DATE	BY	CKR	APP.

V129-C YELLOW HORZ
BLDG #: 1002A
RACK #: R0210
CHASSIS ID: CFE-2A-TVDAMP1
SLOT #: 13 & 14
A16 BASE ADDRESS: 0x0600

RHIC EVENT LINK
BLDG #: 1002A
RACK #: R0210
FANOUT #: D

V124-C YELLOW HORZ
BLDG #: 1002A
RACK #: R0210
CHASSIS ID: CFE-2A-TVDAMP1
SLOT #: 11

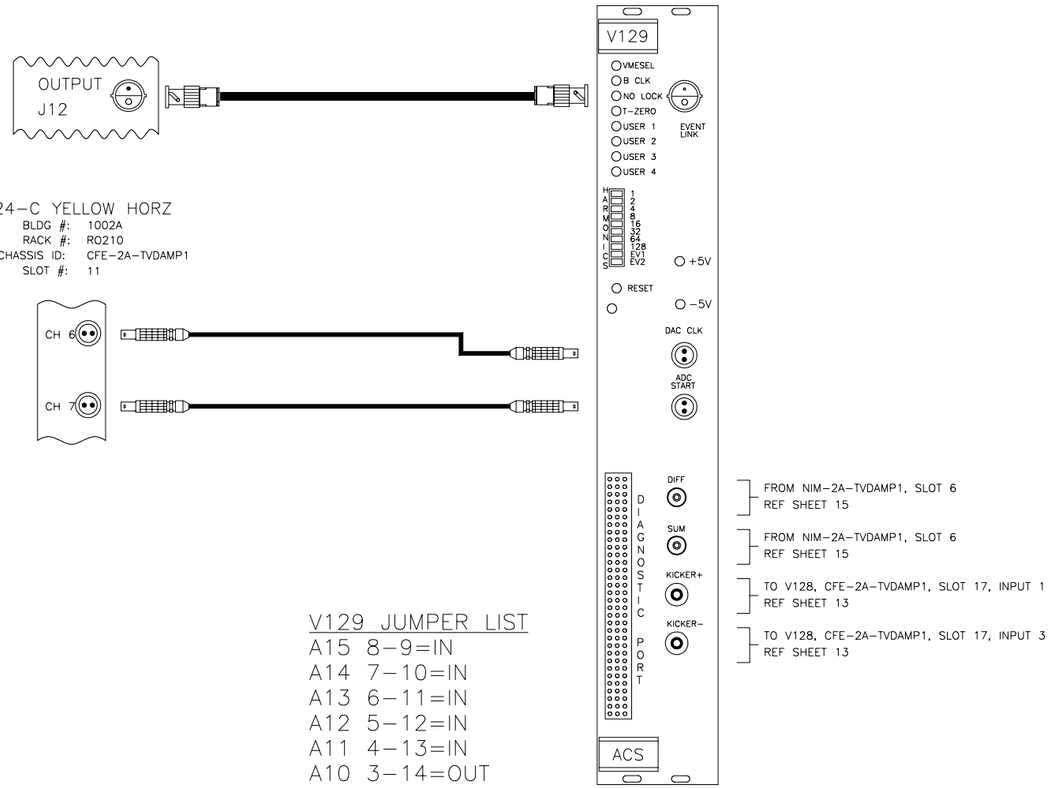

FROM NIM-2A-TVDAMP1, SLOT 6
REF SHEET 15

FROM NIM-2A-TVDAMP1, SLOT 6
REF SHEET 15

TO V128, CFE-2A-TVDAMP1, SLOT 17, INPUT 1
REF SHEET 13

TO V128, CFE-2A-TVDAMP1, SLOT 17, INPUT 3
REF SHEET 13

V129 JUMPER LIST
A15 8-9=IN
A14 7-10=IN
A13 6-11=IN
A12 5-12=IN
A11 4-13=IN
A10 3-14=OUT
A9 2-5=OUT
A8 1-16=IN

JTAG JUMPERS
JP1=IN
JP3=IN

PLL JUMPER
JP4=IN

OUT=1/IN=0

-3	-2	-1	REF DESIGNATOR	ITEM NO.	DESCRIPTION	MAT'L DWG NO.,BNL NO.
QTY REQD						

INTERPRET IN GENERAL ACCORDANCE WITH ASME Y14.24M-1989
UNLESS OTHERWISE SPECIFIED DIMENSIONS ARE IN INCHES
DECIMAL TOLERANCES
.X ±.030
.XX ±.015
.XXX ±.005
ANGULAR TOLERANCE
± .5°
NA FINISH
BREAK SHARP EDGES
MAX. XX MIN. XX
OUTSTANDING ECN

Q.A. CATEGORY A-3
DATE
DRAWN BY Ed Koropsak 6/2/03
CHECKED BY
DESIGN APPROVAL
ENGINEER APPROVAL Rob Michnoff
SUPVR. APPROVAL
NEXT ASSEMBLY

BROOKHAVEN NATIONAL LABORATORY
UPTON, N.Y. 11973
RHIC CONTROLS
SERVICE BLDG. 1002A DAMPER
V129 C MODULE YELLOW HORZ
SIZE D
94028xxx
DRAWING NUMBER
REV. A
MATERIAL:
SCALE: NA
WEIGHT:
SHEET 11

REV.	ZONE	ECN NO.	DATE	BY	CKR	APP.

V129-D YELLOW VERT
BLDG #: 1002A
RACK #: R0210
CHASSIS ID: CFE-2A-TVDAMP1
SLOT #: 15 & 16
A16 BASE ADDRESS: 0x0800

RHIC EVENT LINK
BLDG #: 1002A
RACK #: R0210
FANOUT #: D

V124-D YELLOW VERT
BLDG #: 1002A
RACK #: R0210
CHASSIS ID: CFE-2A-TVDAMP1
SLOT #: 12

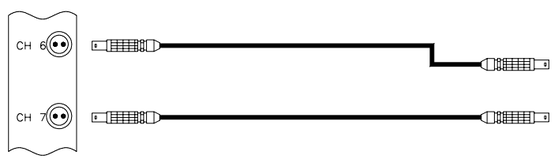

FROM NIM-2A-TVDAMP1, SLOT 8
REF SHEET 15

FROM NIM-2A-TVDAMP1, SLOT 8
REF SHEET 15

TO V128, CFE-2A-TVDAMP1, SLOT 17, INPUT 5
REF SHEET 13

TO V128, CFE-2A-TVDAMP1, SLOT 17, INPUT 7
REF SHEET 13

V129 JUMPER LIST
A15 8-9=IN
A14 7-10=IN
A13 6-11=IN
A12 5-12=IN
A11 4-13=OUT
A10 3-14=IN
A9 2-5=IN
A8 1-16=IN

JTAG JUMPERS
JP1=IN
JP3=IN

PLL JUMPER
JP4=IN

OUT=1/IN=0

-3	-2	-1	REF DESIGNATOR	ITEM NO.	DESCRIPTION	MAT'L DWG NO.,BNL NO.
QTY REQD						

INTERPRET IN GENERAL ACCORDANCE WITH ASME Y14.24M-1989
UNLESS OTHERWISE SPECIFIED DIMENSIONS ARE IN INCHES
DECIMAL TOLERANCES
.X ±.030
.XX ±.015
.XXX ±.005
ANGULAR TOLERANCE ± .5°
NA FINISH
BREAK SHARP EDGES MAX. XX MIN. XX
OUTSTANDING ECN

Q.A. CATEGORY A-3
DRAWN BY Ed Koropsak 6/2/03
CHECKED BY
DESIGN APPROVAL
ENGINEER APPROVAL Rob Michnoff
SUPVR. APPROVAL
NEXT ASSEMBLY

BROOKHAVEN NATIONAL LABORATORY
UPTON, N.Y. 11973
RHIC CONTROLS
SERVICE BLDG. 1002A DAMPER
V129 D MODULE YELLOW VERT
SIZE D
94028xxx
DRAWING NUMBER
REV. A
MATERIAL:
SCALE: NA
WEIGHT:
SHEET 12

1 *AUTOCAD

REV.	ZONE	ECN NO.	DATE	BY	CKR	APP.

Controls, C-AD 6/4/2003 2:25 PM page_13.dwg

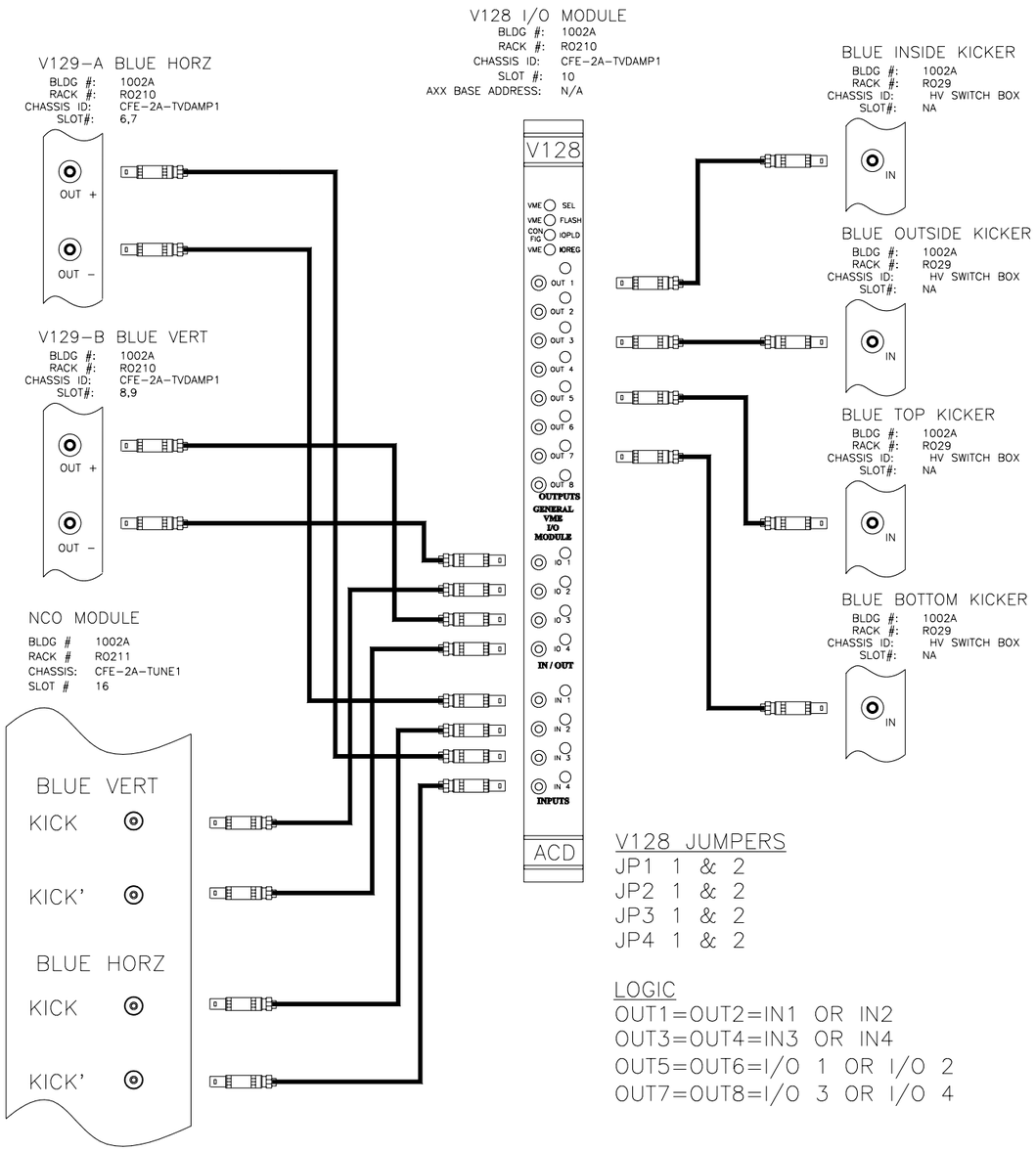

V128 JUMPERS
JP1 1 & 2
JP2 1 & 2
JP3 1 & 2
JP4 1 & 2

LOGIC
OUT1=OUT2=IN1 OR IN2
OUT3=OUT4=IN3 OR IN4
OUT5=OUT6=I/O 1 OR I/O 2
OUT7=OUT8=I/O 3 OR I/O 4

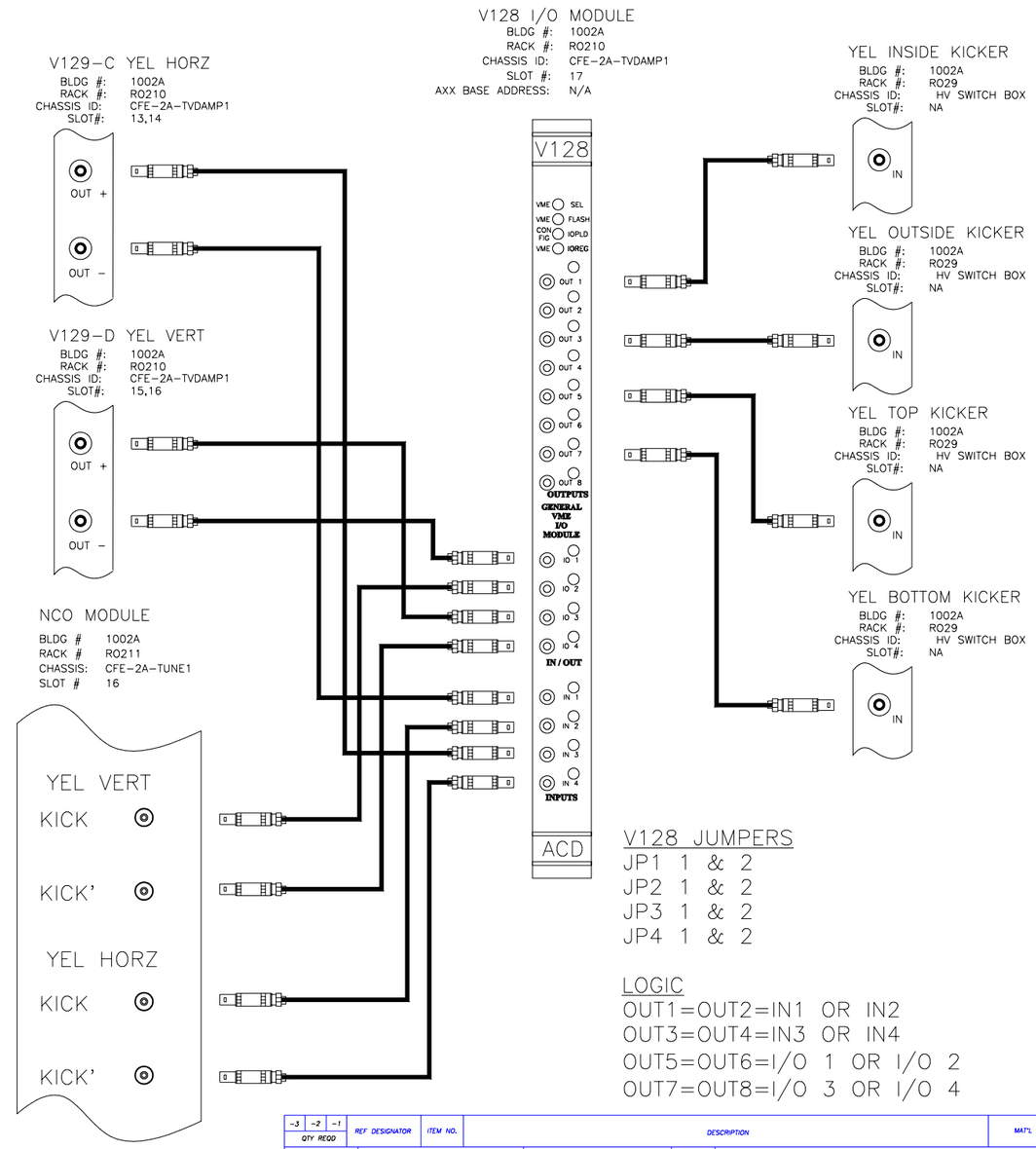

V128 JUMPERS
JP1 1 & 2
JP2 1 & 2
JP3 1 & 2
JP4 1 & 2

LOGIC
OUT1=OUT2=IN1 OR IN2
OUT3=OUT4=IN3 OR IN4
OUT5=OUT6=I/O 1 OR I/O 2
OUT7=OUT8=I/O 3 OR I/O 4

-3	-2	-1	REF DESIGNATOR	ITEM NO.	DESCRIPTION	MAT'L DWG NO.,BNL NO.
QTY REQD						

INTERPRET IN GENERAL ACCORDANCE WITH ASME Y14.24M-1989	Q.A. CATEGORY A-3	DATE	BROOKHAVEN NATIONAL LABORATORY
	DRAWN BY: Ed Koropsak	6/4/03	UPTON, N.Y. 11973
UNLESS OTHERWISE SPECIFIED DIMENSIONS ARE IN INCHES	CHECKED BY		RHIC CONTROLS
DECIMAL TOLERANCES .X ±.030 .XX ±.015 .XXX ±.005 ANGULAR TOLERANCE ± .5°	DESIGN APPROVAL		SERVICE BLDG. 1002A DAMPER
	ENGINEER APPROVAL: Rob Michnoff		V128 MODULES
	SUPVR. APPROVAL		SIZE D — 94028xxx — REV. A
OUTSTANDING ECN	NA FINISH	BREAK SHARP EDGES MAX. XX MIN. XX	NEXT ASSEMBLY — DRAWING NUMBER
			MATERIAL: SCALE: NA WEIGHT: SHEET 13

1 *AUTOCAD

REV.	ZONE	ECN NO.	DATE	BY	CKR	APP.

Controls, C-AD 6/3/2003 9:44 AM page_14.dwg

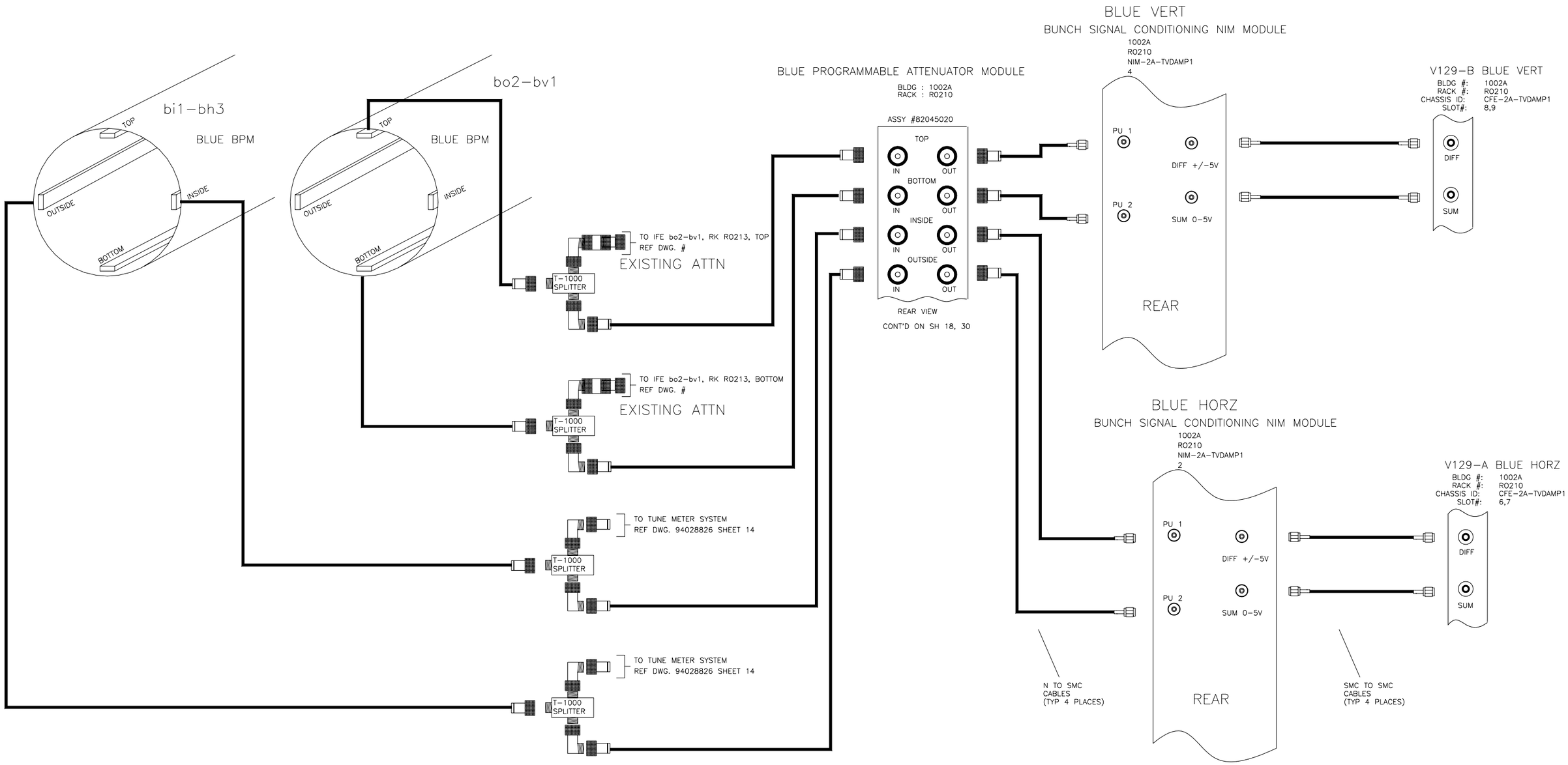

-3	-2	-1	REF DESIGNATOR	ITEM NO.	DESCRIPTION	MAT'L DWG NO.,BNL NO.
QTY REQD						

INTERPRET IN GENERAL ACCORDANCE WITH ASME Y14.24M-1989

UNLESS OTHERWISE SPECIFIED DIMENSIONS ARE IN INCHES

DECIMAL TOLERANCES
.X ±.030
.XX ±.015
.XXX ±.005
ANGULAR TOLERANCE
± .5°

NA FINISH

BREAK SHARP EDGES
MAX. XX MIN. XX

OUTSTANDING ECN

Q.A. CATEGORY A-3		DATE
DRAWN BY	Ed Koropsak	5/30/03
CHECKED BY		
DESIGN APPROVAL		
ENGINEER APPROVAL	Rob Michnoff	
SUPVR. APPROVAL		

NEXT ASSEMBLY

BROOKHAVEN NATIONAL LABORATORY
UPTON, N.Y. 11973

RHIC CONTROLS

SERVICE BLDG. 1002A DAMPER

PICKUPS_BLUE

SIZE D | DRAWING NUMBER 94028xxx | REV. A

MATERIAL: | SCALE: NA | WEIGHT: | SHEET 14

1 *AUTOCAD

REV.	ZONE	ECN NO.	DATE	BY	CKR	APP.

Controls, C-AD 6/3/2003 9:50 AM page_15.dwg

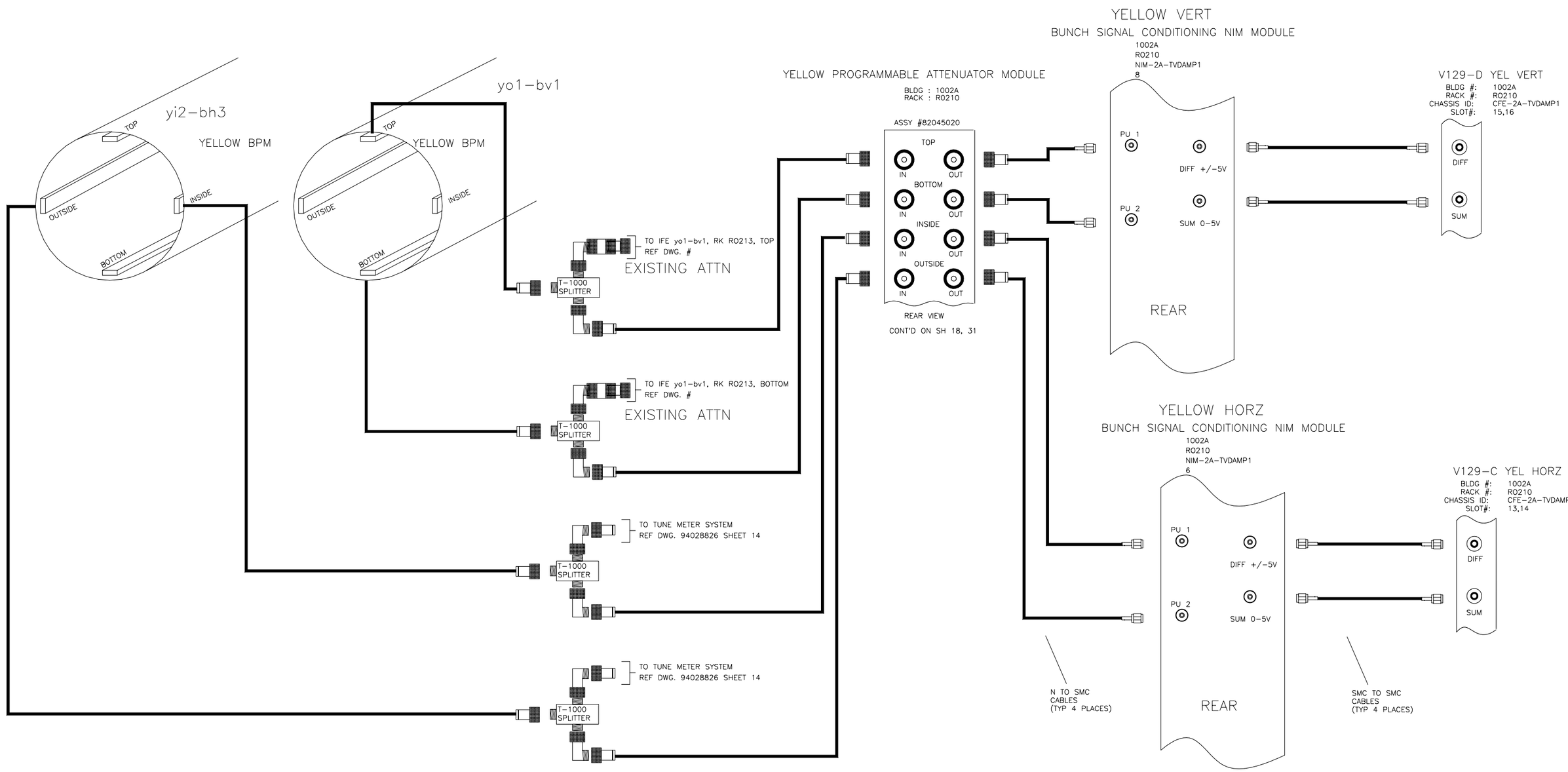

-3	-2	-1	REF DESIGNATOR	ITEM NO.	DESCRIPTION	MAT'L DWG NO._BNL NO.
QTY REQD						

INTERPRET IN GENERAL ACCORDANCE WITH ASME Y14.24M-1989	Q.A. CATEGORY A-3	DATE	BROOKHAVEN NATIONAL LABORATORY
	DRAWN BY Ed Koropsak	5/30/03	UPTON, N.Y. 11973
UNLESS OTHERWISE SPECIFIED DIMENSIONS ARE IN INCHES	CHECKED BY		RHIC CONTROLS
DECIMAL TOLERANCES .X ±.030 .XX ±.015 .XXX ±.005 ANGULAR TOLERANCE ± .5°	DESIGN APPROVAL		SERVICE BLDG. 1002A DAMPER
	ENGINEER APPROVAL Rob Michnoff		PICKUPS_YELLOW
	SUPVR. APPROVAL		SIZE D — 94028xxx — REV. A
NA FINISH — BREAK SHARP EDGES	NEXT ASSEMBLY		DRAWING NUMBER
OUTSTANDING ECN — MAX. XX MIN. XX			MATERIAL: — SCALE: NA — WEIGHT: — SHEET 15

*AUTOCAD

REV.	ZONE	ECN NO.	DATE	BY	CKR	APP.

Controls, C-AD 6/3/2003 10:19 AM page_16.dwg

BOTTOM KICKER WIRING DIAGRAM
(TOP, INSIDE, OUTSIDE NOT SHOWN)

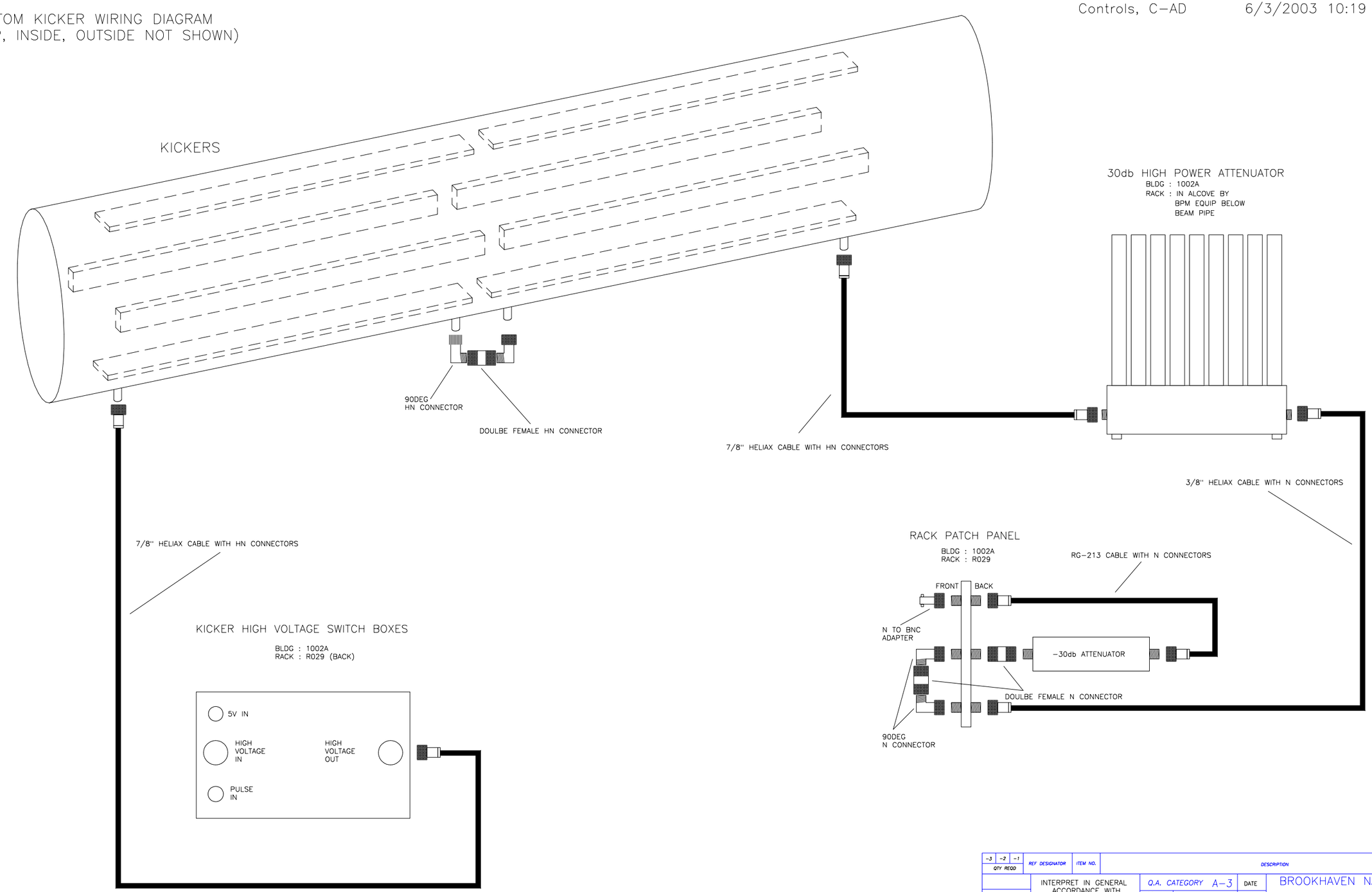

-3	-2	-1	REF DESIGNATOR	ITEM NO.	DESCRIPTION	MAT'L DWG NO.,BNL NO.
QTY REQD						

INTERPRET IN GENERAL ACCORDANCE WITH ASME Y14.24M-1989	Q.A. CATEGORY A-3	DATE	BROOKHAVEN NATIONAL LABORATORY
	DRAWN BY Al Watson	3/24/00	UPTON, N.Y. 11973
UNLESS OTHERWISE SPECIFIED DIMENSIONS ARE IN INCHES	CHECKED BY		RHIC CONTROLS
DECIMAL TOLERANCES .X ±.030 .XX ±.015 .XXX ±.005 ANGULAR TOLERANCE ± .5°	DESIGN APPROVAL		SERVICE BLDG. 1002A DAMPER
	ENGINEER APPROVAL		KICKERS
	SUPVR. APPROVAL		SIZE D / 94028xxx / REV. A
NA FINISH / BREAK SHARP EDGES MAX. XX MIN. XX	NEXT ASSEMBLY		DRAWING NUMBER
OUTSTANDING ECN			MATERIAL: / SCALE: NA / WEIGHT: / SHEET 16

1 *AUTOCAD

REV.	ZONE	ECN NO.	DATE	BY	CKR	APP.

Controls, C-AD 6/3/2003 2:17 PM page_17.dwg

-3	-2	-1	REF DESIGNATOR	ITEM NO.	DESCRIPTION	MAT'L DWG NO._BNL NO.
QTY REQD						

INTERPRET IN GENERAL ACCORDANCE WITH ASME Y14.24M-1989	Q.A. CATEGORY A-3		DATE	BROOKHAVEN NATIONAL LABORATORY
	DRAWN BY	Al Watson	3/27/00	UPTON, N.Y. 11973
UNLESS OTHERWISE SPECIFIED DIMENSIONS ARE IN INCHES	CHECKED BY			RHIC CONTROLS
DECIMAL TOLERANCES .X ±.030 .XX ±.015 .XXX ±.005 ANGULAR TOLERANCE ± .5°	DESIGN APPROVAL			SERVICE BLDG. 1002A DAMPER
	ENGINEER APPROVAL	Rob Michnoff		WIRING
	SUPVR. APPROVAL			SIZE D — DRAWING NUMBER 94028xxx — REV. A
NA FINISH — BREAK SHARP EDGES MAX. XX MIN. XX	NEXT ASSEMBLY			
OUTSTANDING ECN				MATERIAL: — SCALE: NA — WEIGHT: — SHEET 17

*AUTOCAD

REV.	ZONE	ECN NO.	DATE	BY	CKR	APP.

Controls, C-AD 6/4/2003 4:06 PM page_18.dwg

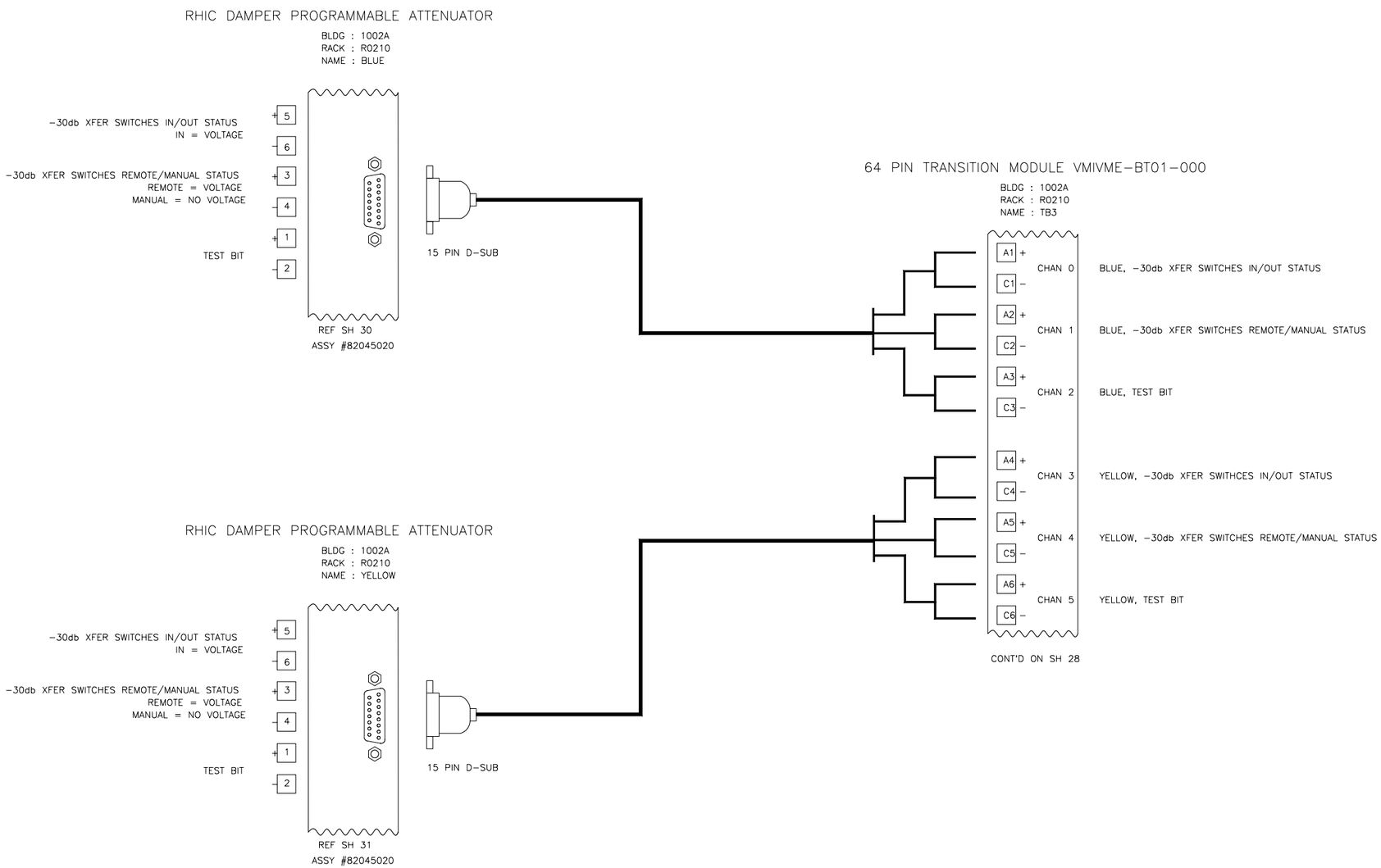

-3	-2	-1	REF DESIGNATOR	ITEM NO.	DESCRIPTION	MAT'L DWG NO.,BNL NO.
QTY REQD						

INTERPRET IN GENERAL ACCORDANCE WITH ASME Y14.24M-1989	Q.A. CATEGORY A-3	DATE	BROOKHAVEN NATIONAL LABORATORY
	DRAWN BY Al Watson	3/27/00	UPTON, N.Y. 11973
UNLESS OTHERWISE SPECIFIED DIMENSIONS ARE IN INCHES	CHECKED BY		RHIC CONTROLS
DECIMAL TOLERANCES .X ±.030 .XX ±.015 .XXX ±.005 ANGULAR TOLERANCE ± .5°	DESIGN APPROVAL		SERVICE BLDG. 1002A DAMPER
	ENGINEER APPROVAL Rob Michnoff		WIRING_1
	SUPVR. APPROVAL		SIZE D — 94028xxx — REV. A
NA FINISH — BREAK SHARP EDGES MAX. XX MIN. XX	NEXT ASSEMBLY		DRAWING NUMBER
OUTSTANDING ECN			MATERIAL: SCALE: NA WEIGHT: SHEET 18

*AUTOCAD

REV.	ZONE	ECN NO.	DATE	BY	CKR	APP.

Controls, C-AD 6/3/2003 10:26 AM page_19.dwg

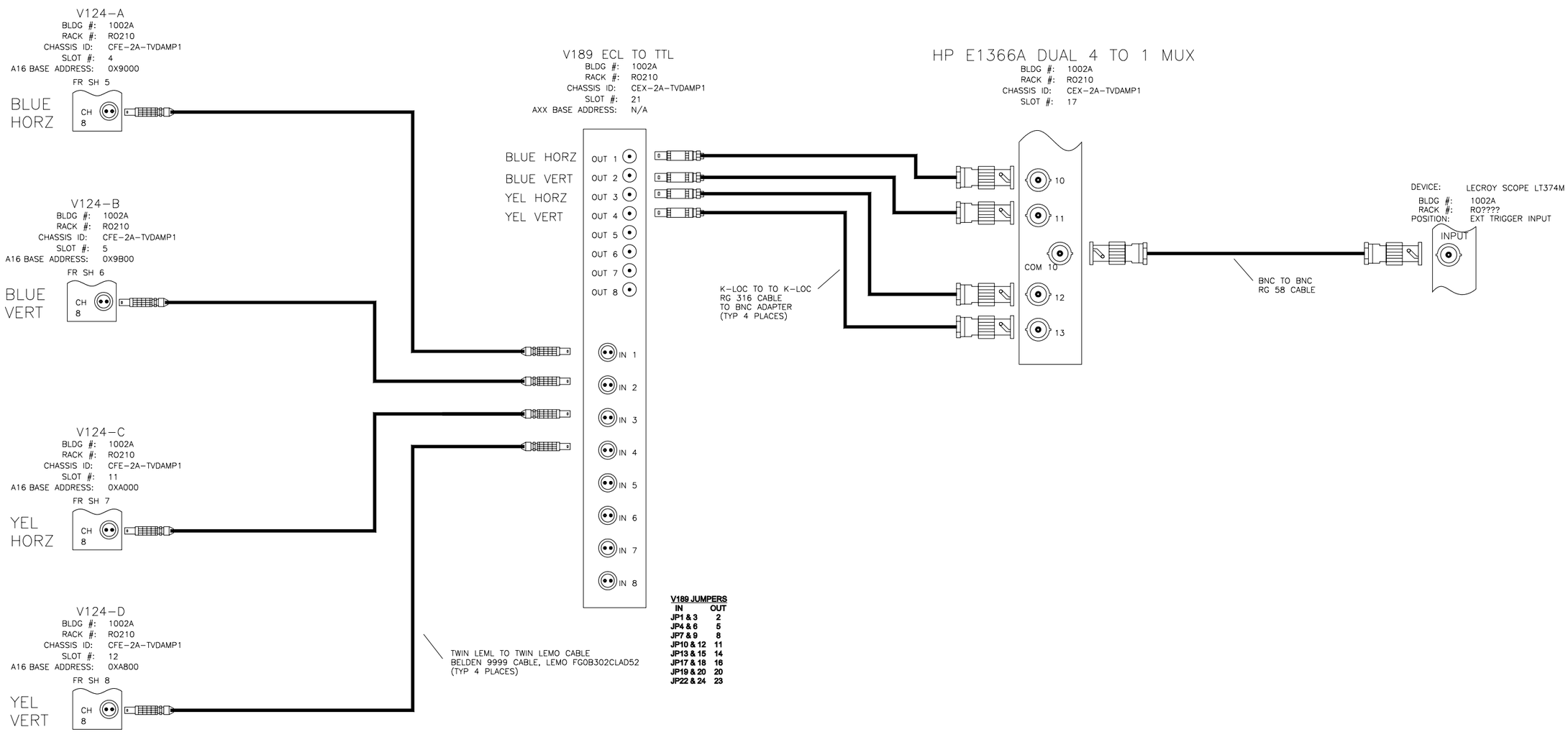

V189 JUMPERS

IN	OUT
JP1 & 3	2
JP4 & 6	5
JP7 & 9	8
JP10 & 12	11
JP13 & 15	14
JP17 & 18	16
JP19 & 20	20
JP22 & 24	23

-3	-2	-1	REF DESIGNATOR	ITEM NO.	DESCRIPTION	MAT'L DWG NO._BNL NO.
QTY REQD						

INTERPRET IN GENERAL ACCORDANCE WITH ASME Y14.24M-1989

UNLESS OTHERWISE SPECIFIED DIMENSIONS ARE IN INCHES

DECIMAL TOLERANCES
.X ±.030
.XX ±.015
.XXX ±.005
ANGULAR TOLERANCE
± .5°

NA FINISH

BREAK SHARP EDGES
MAX. XX MIN. XX

OUTSTANDING ECN

Q.A. CATEGORY A-3

		DATE
DRAWN BY	Ed Koropsak	6/3/03
CHECKED BY		
DESIGN APPROVAL		
ENGINEER APPROVAL	Rob Michnoff	
SUPVR. APPROVAL		

NEXT ASSEMBLY

BROOKHAVEN NATIONAL LABORATORY
UPTON, N.Y. 11973

RHIC CONTROLS

SERVICE BLDG. 1002A DAMPER

WIRING_1

SIZE D

DRAWING NUMBER 94028xxx

REV. A

MATERIAL: SCALE: NA WEIGHT: SHEET 19

1 *AUTOCAD

REV.	ZONE	ECN NO.	DATE	BY	CKR	APP.

Controls, C-AD 6/4/2003 9:14 AM page_20.dwg

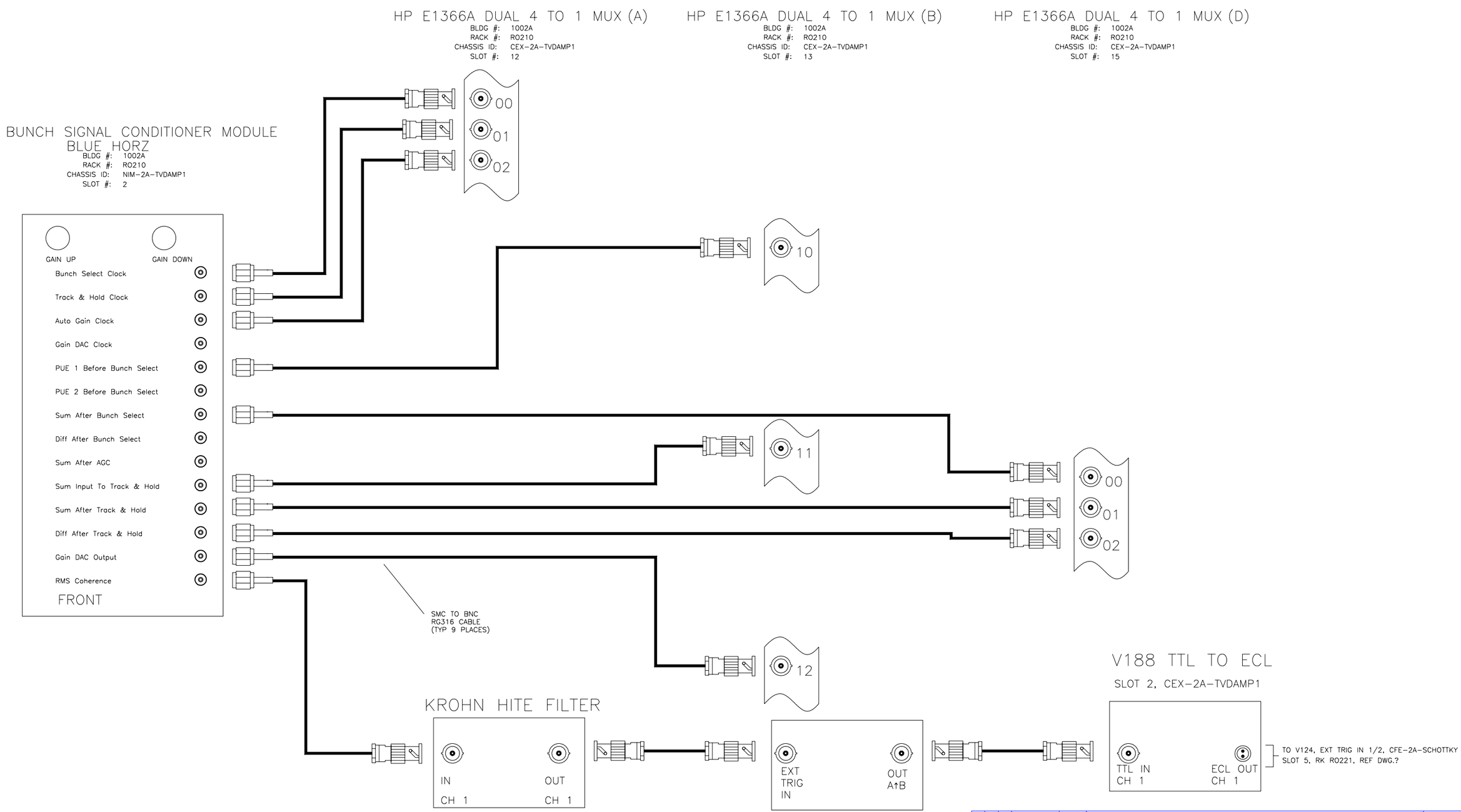

RMS SIGNAL IS USED TO GENERATE A TRIGGER FOR BEAM INSTABILITY MEASUREMENTS.
FILTER IS USED TO GIVE THE SIGNAL SOME GAIN, THIS IS THEN USED TO TRIGGER THE DG 535 WHICH OUTPUTS A TTL LEVEL PULSE. IT THEN GOES TO A TTL TO ECL CONVERSION WHICH THEN IS USED AS AN EXTERNAL TRIGGER INTO A V124.

-3	-2	-1	REF DESIGNATOR	ITEM NO.	DESCRIPTION	MAT'L DWG NO.BNL NO.
QTY REQD						

INTERPRET IN GENERAL ACCORDANCE WITH ASME Y14.24M-1989

UNLESS OTHERWISE SPECIFIED DIMENSIONS ARE IN INCHES

DECIMAL TOLERANCES
.X ±.030
.XX ±.015
.XXX ±.005
ANGULAR TOLERANCE
± .5°

NA FINISH

BREAK SHARP EDGES
MAX. XX MIN. XX

OUTSTANDING ECN

Q.A. CATEGORY A-3		DATE	
DRAWN BY	Ed Koropsak	5/13/03	
CHECKED BY			
DESIGN APPROVAL			
ENGINEER APPROVAL	Rob Michnoff		
SUPVR. APPROVAL			
NEXT ASSEMBLY			

BROOKHAVEN NATIONAL LABORATORY
UPTON, N.Y. 11973

RHIC CONTROLS

SERVICE BLDG. 1002A DAMPER

MUX CONNECTIONS

SIZE D | DRAWING NUMBER 94028xxx | REV. A

MATERIAL: | SCALE: NA | WEIGHT: | SHEET 20

*AUTOCAD

REV.	ZONE	ECN NO.	DATE	BY	CKR	APP.

Controls, C-AD 6/3/2003 11:41 AM page_21.dwg

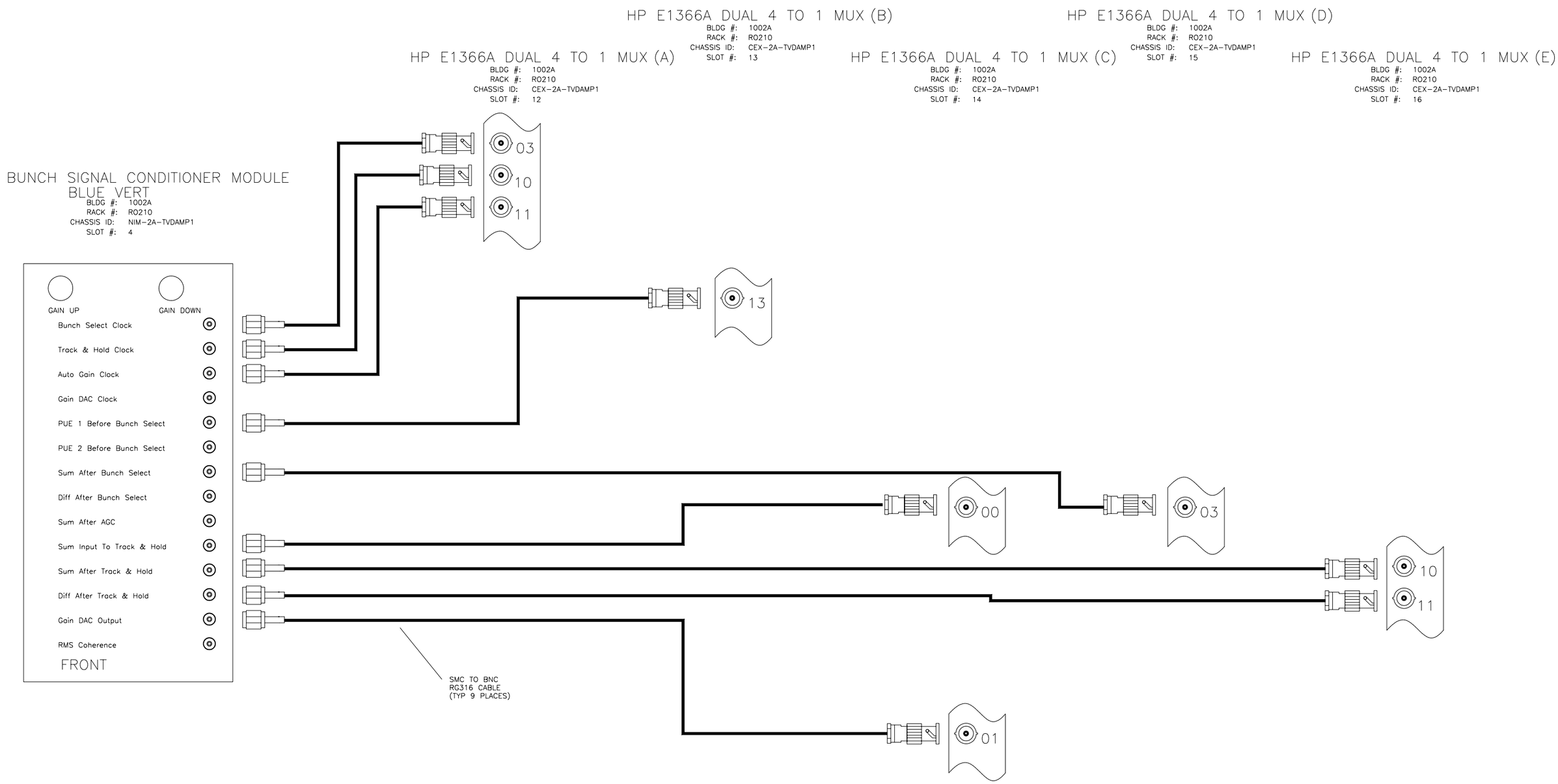

-3	-2	-1	REF DESIGNATOR	ITEM NO.	DESCRIPTION	MAT'L DWG NO./BNL NO.
QTY REQD						

INTERPRET IN GENERAL ACCORDANCE WITH ASME Y14.24M-1989

UNLESS OTHERWISE SPECIFIED DIMENSIONS ARE IN INCHES

DECIMAL TOLERANCES
.X ±.030
.XX ±.015
.XXX ±.005
ANGULAR TOLERANCE
± .5°

NA FINISH

BREAK SHARP EDGES
MAX. XX MIN. XX

OUTSTANDING ECN

Q.A. CATEGORY A-3		DATE
DRAWN BY	Ed Koropsak	5/13/03
CHECKED BY		
DESIGN APPROVAL		
ENGINEER APPROVAL	Rob Michnoff	
SUPVR. APPROVAL		

NEXT ASSEMBLY

BROOKHAVEN NATIONAL LABORATORY
UPTON, N.Y. 11973

RHIC CONTROLS

SERVICE BLDG. 1002A DAMPER

MUX CONNECTIONS

SIZE D

94028xxx

DRAWING NUMBER

REV. A

MATERIAL:

SCALE: NA

WEIGHT:

SHEET 21

1 *AUTOCAD

REV.	ZONE	ECN NO.	DATE	BY	CKR	APP.

Controls, C-AD 6/4/2003 9:15 AM page_22.dwg

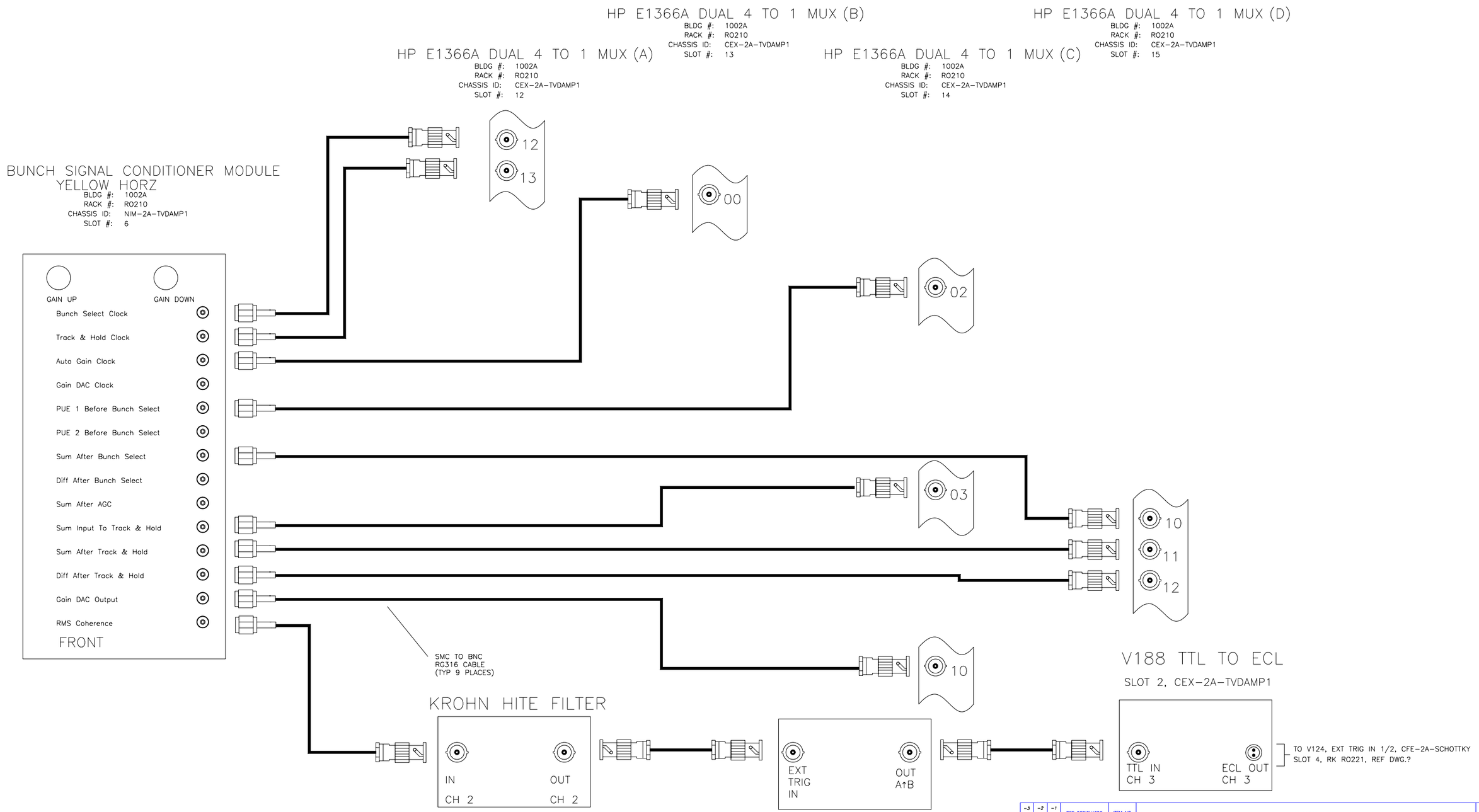

RMS SIGNAL IS USED TO GENERATE A TRIGGER FOR BEAM INSTABILITY MEASUREMENTS.
FILTER IS USED TO GIVE THE SIGNAL SOME GAIN, THIS IS THEN USED TO TRIGGER THE DG 535 WHICH OUTPUTS A TTL LEVEL PULSE. IT THEN GOES TO A TTL TO ECL CONVERSION WHICH THEN IS USED AS AN EXTERNAL TRIGGER INTO A V124.

-3	-2	-1	REF DESIGNATOR	ITEM NO.	DESCRIPTION	MAT'L DWG NO.,BNL NO.
QTY REQD						

INTERPRET IN GENERAL ACCORDANCE WITH ASME Y14.24M-1989

UNLESS OTHERWISE SPECIFIED DIMENSIONS ARE IN INCHES

DECIMAL TOLERANCES
.X ±.030
.XX ±.015
.XXX ±.005
ANGULAR TOLERANCE
± .5°

NA FINISH

BREAK SHARP EDGES
MAX. XX MIN. XX

OUTSTANDING ECN

Q.A. CATEGORY A-3		DATE
DRAWN BY	Ed Koropsak	5/13/03
CHECKED BY		
DESIGN APPROVAL		
ENGINEER APPROVAL	Rob Michnoff	
SUPVR. APPROVAL		

NEXT ASSEMBLY

BROOKHAVEN NATIONAL LABORATORY
UPTON, N.Y. 11973

RHIC CONTROLS

SERVICE BLDG. 1002A DAMPER

MUX CONNECTIONS

SIZE D — DRAWING NUMBER 94028xxx — REV. A

MATERIAL: SCALE: NA WEIGHT: SHEET 22

1 *AUTOCAD

REV.	ZONE	ECN NO.	DATE	BY	CKR	APP.

Controls, C-AD 6/3/2003 1:36 PM page_23.dwg

HP E1366A DUAL 4 TO 1 MUX (C)
BLDG #: 1002A
RACK #: RO210
CHASSIS ID: CEX-2A-TVDAMP
SLOT #: 14

HP E1366A DUAL 4 TO 1 MUX (E)
BLDG #: 1002A
RACK #: RO210
CHASSIS ID: CEX-2A-TVDAMP
SLOT #: 16

HP E1366A DUAL 4 TO 1 MUX (B)
BLDG #: 1002A
RACK #: RO210
CHASSIS ID: CEX-2A-TVDAMP
SLOT #: 13

HP E1366A DUAL 4 TO 1 MUX (D)
BLDG #: 1002A
RACK #: RO210
CHASSIS ID: CEX-2A-TVDAMP
SLOT #: 15

BUNCH SIGNAL CONDITIONER MODULE
YELLOW VERT
BLDG #: 1002A
RACK #: RO210
CHASSIS ID: NIM-2A-TVDAMP
SLOT #: 8

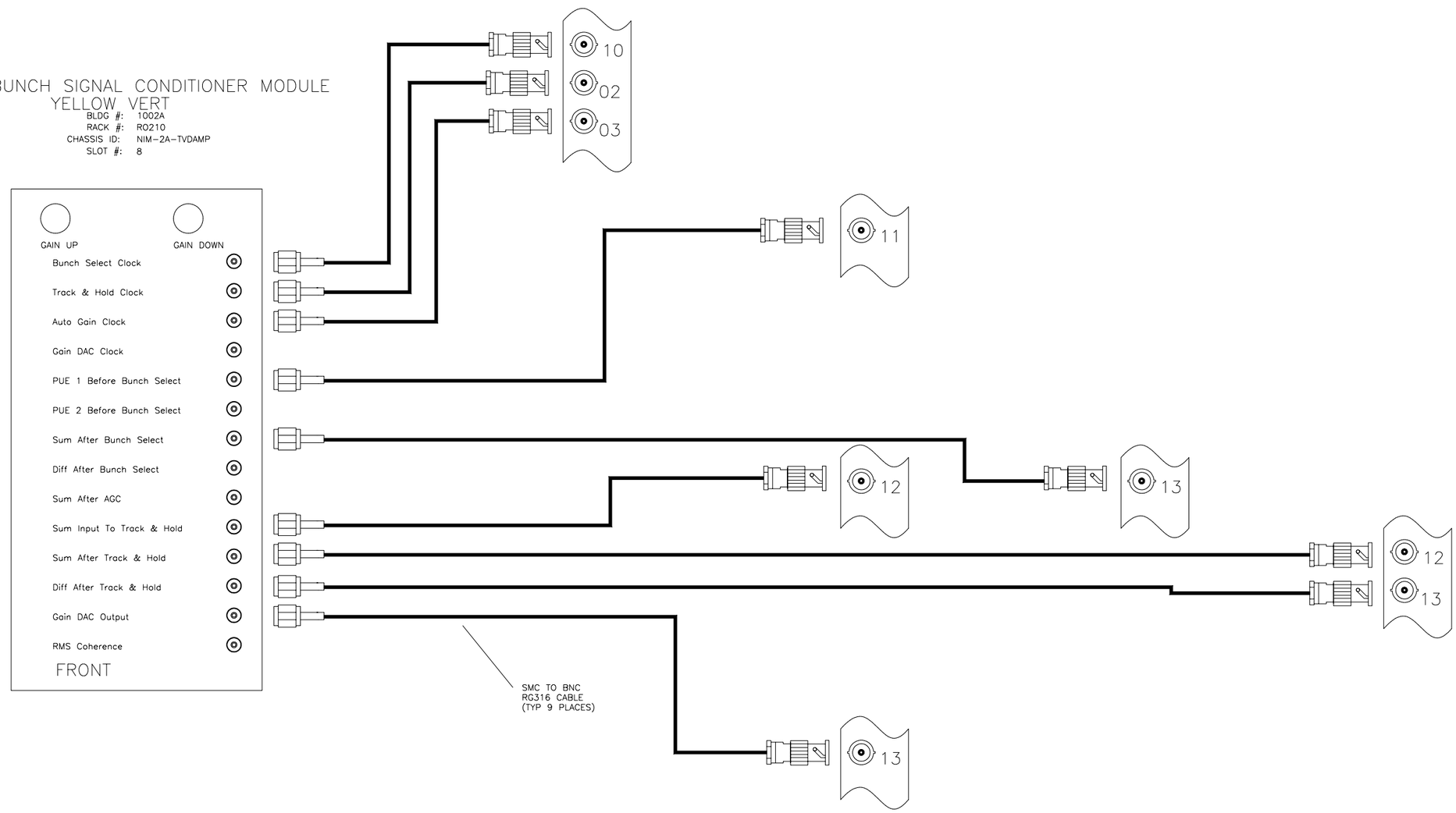

-3	-2	-1	REF DESIGNATOR	ITEM NO.	DESCRIPTION	MAT'L DWG NO./BNL NO.
QTY REQD						

INTERPRET IN GENERAL ACCORDANCE WITH ASME Y14.24M-1989
UNLESS OTHERWISE SPECIFIED DIMENSIONS ARE IN INCHES
DECIMAL TOLERANCES
.X ±.030
.XX ±.015
.XXX ±.005
ANGULAR TOLERANCE
± .5°

NA FINISH
BREAK SHARP EDGES
MAX. XX MIN. XX
OUTSTANDING ECN

Q.A. CATEGORY A-3

		DATE
DRAWN BY	Ed Koropsak	5/13/03
CHECKED BY		
DESIGN APPROVAL		
ENGINEER APPROVAL	Rob Michnoff	
SUPVR. APPROVAL		

NEXT ASSEMBLY

BROOKHAVEN NATIONAL LABORATORY
UPTON, N.Y. 11973
RHIC CONTROLS
SERVICE BLDG. 1002A DAMPER
MUX CONNECTIONS

SIZE D
94028xxx
DRAWING NUMBER
REV. A
MATERIAL:
SCALE: NA
WEIGHT:
SHEET 23

1 *AUTOCAD

REV.	ZONE	ECN NO.	DATE	BY	CKR	APP.

Controls, C-AD 6/3/2003 1:41 PM page_24.dwg

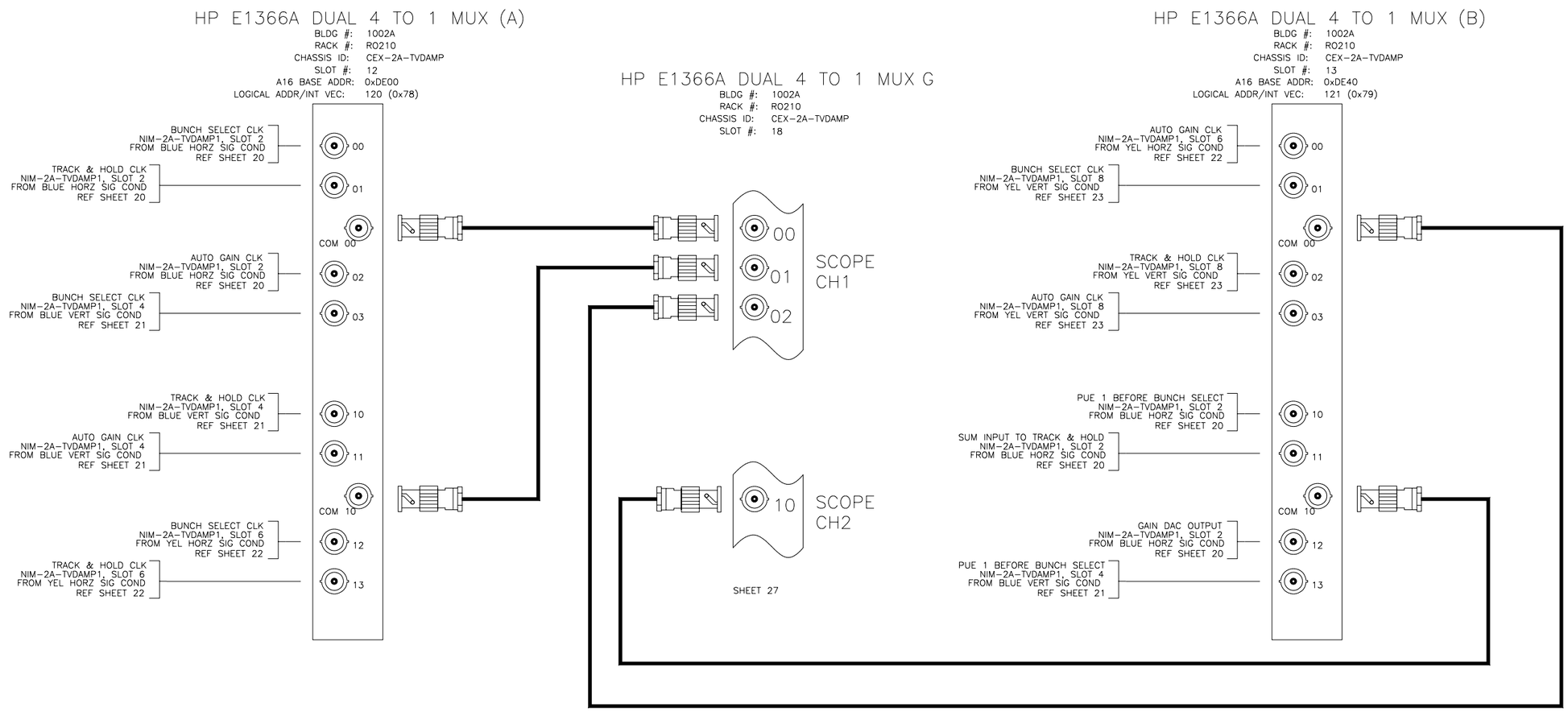

PUSH DOWN INDICATED SIDE

PUSH DOWN INDICATED SIDE

-3	-2	-1	REF DESIGNATOR	ITEM NO.	DESCRIPTION	MAT'L DWG NO.BNL NO.
QTY REQD						

INTERPRET IN GENERAL ACCORDANCE WITH ASME Y14.24M-1989

UNLESS OTHERWISE SPECIFIED DIMENSIONS ARE IN INCHES

DECIMAL TOLERANCES
.X ±.030
.XX ±.015
.XXX ±.005
ANGULAR TOLERANCE
± .5°

OUTSTANDING ECN

NA FINISH

BREAK SHARP EDGES
MAX. XX MIN. XX

Q.A. CATEGORY A-3

		DATE
DRAWN BY	Ed Koropsak	5/13/03
CHECKED BY		
DESIGN APPROVAL		
ENGINEER APPROVAL	Rob Michnoff	
SUPVR. APPROVAL		

NEXT ASSEMBLY

BROOKHAVEN NATIONAL LABORATORY
UPTON, N.Y. 11973

RHIC CONTROLS

SERVICE BLDG. 1002A DAMPER

MUX CONNECTIONS

SIZE D

94028xxx

DRAWING NUMBER

REV. A

MATERIAL: SCALE: NA WEIGHT: SHEET 24

*AUTOCAD

REV.	ZONE	ECN NO.	DATE	BY	CKR	APP.

Controls, C-AD 6/3/2003 1:46 PM page_25.dwg

HP E1366A DUAL 4 TO 1 MUX (C)

BLDG #: 1002A
RACK #: R0210
CHASSIS ID: CFE-2A-TVDAMP1
SLOT #: 14
A16 BASE ADDR: 0xDE80
LOGICAL ADDR/INT VEC: 122 (0x7A)

HP E1366A DUAL 4 TO 1 MUX G

BLDG #: 1002A
RACK #: R0210
CHASSIS ID: CEX-2A-TVDAMP1
SLOT #: 18

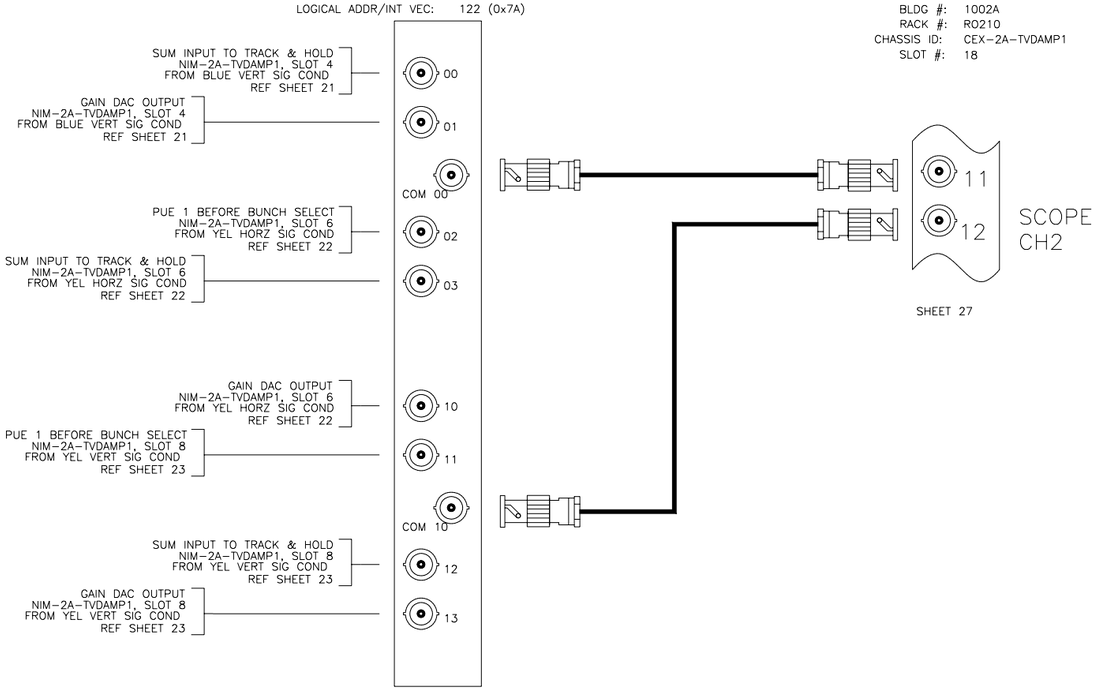

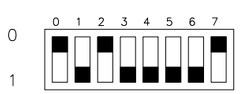

PUSH DOWN INDICATED SIDE

HP E1366A DUAL 4 TO 1 MUX (D)

BLDG #: 1002A
RACK #: R0210
CHASSIS ID: CEX-2A-TVDAMP1
SLOT #: 15
A16 BASE ADDR: 0xDEC0
LOGICAL ADDR/INT VEC: 123 (0x7B)

HP E1366A DUAL 4 TO 1 MUX H

BLDG #: 1002A
RACK #: R0210
CHASSIS ID: CEX-2A-TVDAMP1
SLOT #: 19

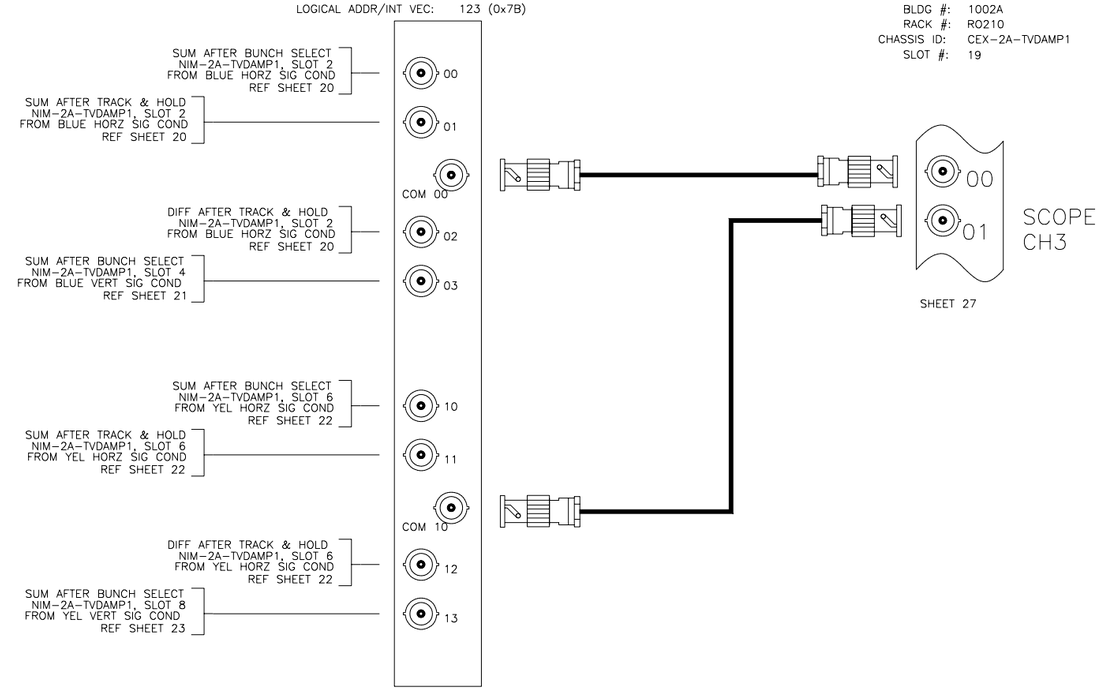

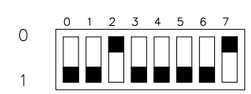

PUSH DOWN INDICATED SIDE

-3	-2	-1	REF DESIGNATOR	ITEM NO.	DESCRIPTION	MAT'L DWG NO./BNL NO.
QTY REQD						

INTERPRET IN GENERAL ACCORDANCE WITH ASME Y14.24M-1989

UNLESS OTHERWISE SPECIFIED DIMENSIONS ARE IN INCHES

DECIMAL TOLERANCES
.X ±.030
.XX ±.015
.XXX ±.005
ANGULAR TOLERANCE
± .5°

NA FINISH

BREAK SHARP EDGES
MAX. XX MIN. XX

OUTSTANDING ECN

Q.A. CATEGORY A-3		DATE
DRAWN BY	Ed Koropsak	5/13/03
CHECKED BY		
DESIGN APPROVAL		
ENGINEER APPROVAL	Rob Michnoff	
SUPVR. APPROVAL		

NEXT ASSEMBLY

BROOKHAVEN NATIONAL LABORATORY
UPTON, N.Y. 11973

RHIC CONTROLS

SERVICE BLDG. 1002A DAMPER

MUX CONNECTIONS

SIZE D | DRAWING NUMBER 94028xxx | REV. A

MATERIAL: | SCALE: NA | WEIGHT: | SHEET 25

*AUTOCAD

REV.	ZONE	ECN NO.	DATE	BY	CKR	APP.

Controls, C-AD 6/4/2003 3:19 PM page_26.dwg

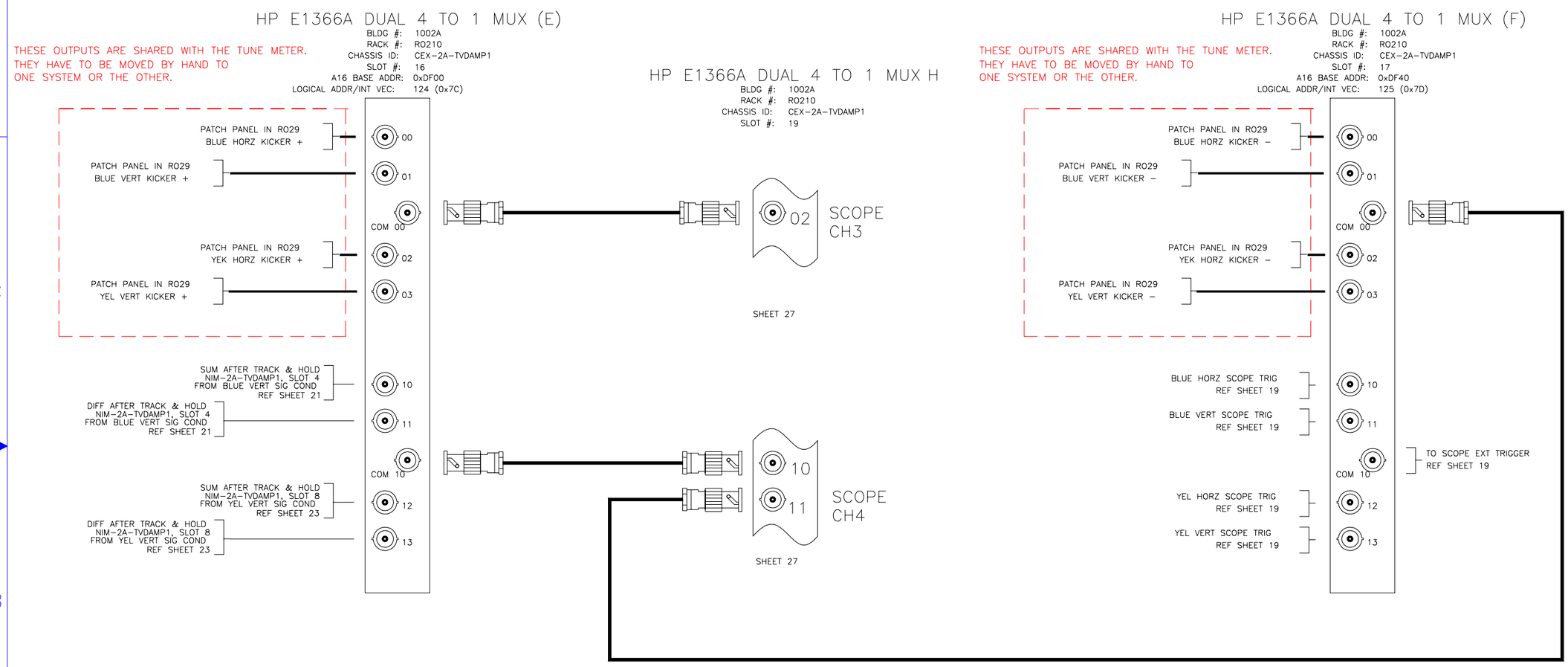

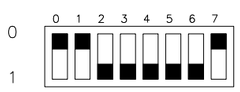

PUSH DOWN INDICATED SIDE

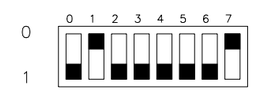

PUSH DOWN INDICATED SIDE

-3	-2	-1	REF DESIGNATOR	ITEM NO.	DESCRIPTION	MAT'L DWG NO./BNL NO.
QTY REQD						

INTERPRET IN GENERAL ACCORDANCE WITH ASME Y14.24M-1989

UNLESS OTHERWISE SPECIFIED DIMENSIONS ARE IN INCHES

DECIMAL TOLERANCES
.X ±.030
.XX ±.015
.XXX ±.005
ANGULAR TOLERANCE
± .5°

OUTSTANDING ECN: NA

FINISH: √

BREAK SHARP EDGES MAX. XX MIN. XX

Q.A. CATEGORY A-3

		DATE
DRAWN BY	Ed Koropsak	5/13/03
CHECKED BY		
DESIGN APPROVAL		
ENGINEER APPROVAL	Rob Michnoff	
SUPVR. APPROVAL		

NEXT ASSEMBLY

BROOKHAVEN NATIONAL LABORATORY
UPTON, N.Y. 11973

RHIC CONTROLS

SERVICE BLDG. 1002A DAMPER

MUX CONNECTIONS

SIZE D

DRAWING NUMBER 94028xxx

REV. A

MATERIAL: SCALE: NA WEIGHT: SHEET 26

*AUTOCAD

REV.	ZONE	ECN NO.	DATE	BY	CKR	APP.

Controls, C-AD 6/5/2003 8:46 AM page_27.dwg

HP E1366A DUAL 4 TO 1 MUX (G)

BLDG #: 1002A
RACK #: RO210
CHASSIS ID: CEX-2A-TVDAMP1
SLOT #: 18
A16 BASE ADDR: 0xDF80
LOGICAL ADDR/INT VEC: 126 (0x7E)

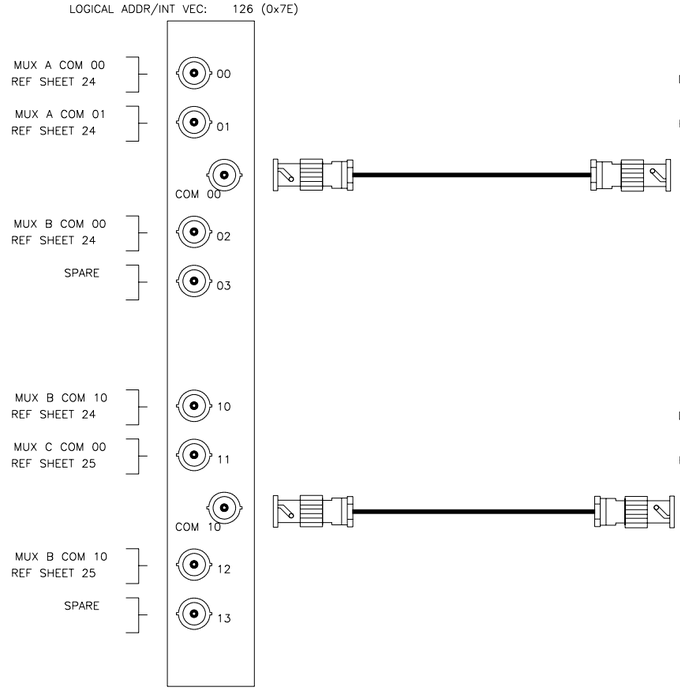

CHANNEL 1 MULTIPLEXER CHANNELS

1-BLUE HORZ BUNCH SELECT CLK
2-BLUE HORZ TRACK & HOLD CLK
3-BLUE HORZ AUTO GAIN CLK
4-BLUE VERT BUNCH SELECT CLK
5-BLUE VERT TRACK & HOLD CLK
6-BLUE VERT AUTO GAIN CLK
7-YEL HORZ BUNCH SELECT CLK
8-YEL HORZ TRACK & HOLD CLK
9-YEL HORZ AUTO GAIN CLK
10-YEL VERT BUNCH SELECT CLK
11-YEL VERT TRACK & HOLD CLK
12-YEL VERT AUTO GAIN CLK

DEVICE: LECROY SCOPE LT374M
BLDG #: 1002A
RACK #: RO???
POSITION: CH 1 INPUT

DEVICE: LECROY SCOPE LT374M
BLDG #: 1002A
RACK #: RO???
POSITION: CH 2 INPUT

CHANNEL 2 MULTIPLEXER CHANNELS

1-BLUE HORZ PUE 1 BEFORE BUNCH SELECT
2-BLUE HORZ SUM INPUT TO TRACK & HOLD
3-BLUE HORZ GAIN DAC OUTPUT
4-BLUE VERT PUE 1 BEFORE BUNCH SELECT
5-BLUE VERT SUM INPUT TO TRACK & HOLD
6-BLUE VERT GAIN DAC OUTPUT
7-YEL HORZ PUE 1 BEFORE BUNCH SELECT
8-YEL HORZ SUM INPUT TO TRACK & HOLD
9-YEL HORZ GAIN DAC OUTPUT
10-YEL VERT PUE 1 BEFORE BUNCH SELECT
11-YEL VERT SUM INPUT TO TRACK & HOLD
12-YEL VERT GAIN DAC OUTPUT

PUSH DOWN INDICATED SIDE

HP E1366A DUAL 4 TO 1 MUX (H)

BLDG #: 1002A
RACK #: RO210
CHASSIS ID: CEX-2A-TVDAMP1
SLOT #: 19
A16 BASE ADDR: 0xDFC0
LOGICAL ADDR/INT VEC: 127 (0x7F)

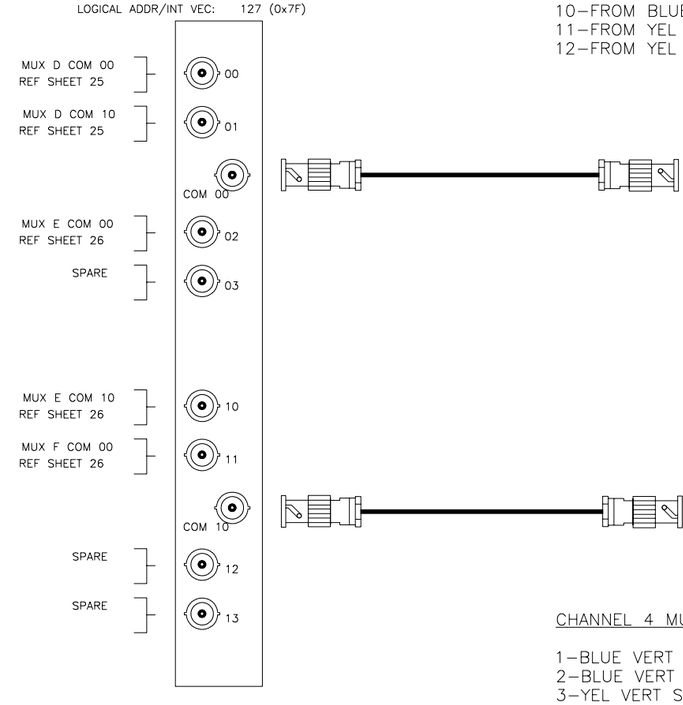

CHANNEL 3 MULTIPLEXER CHANNELS

1-BLUE HORZ SUM AFTER BUNCH SELECT
2-BLUE HORZ SUM AFTER TRACK & HOLD
3-BLUE HORZ DIFF AFTER TRACK & HOLD
4-BLUE VERT SUM AFTER BUNCH SELECT
5-YEL HORZ SUM AFTER BUNCH SELECT
6-YEL HORZ SUM AFTER TRACH & HOLD
7-YEL HORZ DIFF AFTER TRACK & HOLD
8-YEL VERT SUM AFTER BUNCH SELECT
9-FROM BLUE HORZ KICKER +
10-FROM BLUE VERT KICKER +
11-FROM YEL HORZ KICKER +
12-FROM YEL VERT KICKER +

DEVICE: LECROY SCOPE LT374M
BLDG #: 1002A
RACK #: RO???
POSITION: CH 3 INPUT

DEVICE: LECROY SCOPE LT374M
BLDG #: 1002A
RACK #: RO???
POSITION: CH 4 INPUT

CHANNEL 4 MULTIPLEXER CHANNELS

1-BLUE VERT SUM AFTER TRACK & HOLD
2-BLUE VERT DIFF AFTER TRACK & HOLD
3-YEL VERT SUM AFTER TRACK & HOLD
4-YEL VERT DIFF AFTER TRACK & HOLD
5-FROM BLUE HORZ KICKER -
6-FROM BLUE VERT KICKER -
7-FROM YEL HORZ KICKER -
8-FROM YEL VERT KICKER -

PUSH DOWN INDICATED SIDE

-3	-2	-1	REF DESIGNATOR	ITEM NO.	DESCRIPTION	MAT'L DWG NO.,BNL NO.
QTY REQD						

INTERPRET IN GENERAL ACCORDANCE WITH ASME Y14.24M-1989

UNLESS OTHERWISE SPECIFIED DIMENSIONS ARE IN INCHES

DECIMAL TOLERANCES
.X ±.030
.XX ±.015
.XXX ±.005
ANGULAR TOLERANCE
± .5°

OUTSTANDING ECN: NA
FINISH: √
BREAK SHARP EDGES
MAX. XX MIN. XX

Q.A. CATEGORY A-3		DATE	BROOKHAVEN NATIONAL LABORATORY
DRAWN BY	Ed Koropsak	5/13/03	UPTON, N.Y. 11973
CHECKED BY			RHIC CONTROLS
DESIGN APPROVAL			SERVICE BLDG. 1002A DAMPER
ENGINEER APPROVAL	Rob Michnoff		MUX CONNECTIONS
SUPVR. APPROVAL			SIZE D — 94028xxx — REV. A
NEXT ASSEMBLY			DRAWING NUMBER

MATERIAL: SCALE: NA WEIGHT: SHEET 27

1 *AUTOCAD

REV.	ZONE	ECN NO.	DATE	BY	CKR	APP.

Controls, C-AD 6/3/2003 2:39 PM page_28.dwg

VMIVME 1160A-200
BASE ADDRESS SWITCH SETTINGS

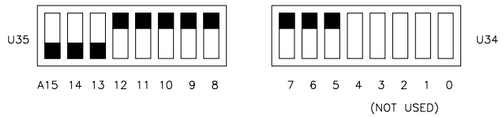

VMIVME 1160A-200
JUMPER SETTINGS

J65

J1:	IN	J33:	IN
J3:	IN	J35:	IN
J5:	IN	J37:	IN
J7:	IN	J39:	IN
J9:	IN	J41:	IN
J11:	IN	J43:	IN
J13:	IN	J45:	IN
J15:	IN	J47:	IN
J17:	IN	J49:	IN
J19:	IN	J51:	IN
J21:	IN	J53:	IN
J23:	IN	J55:	IN
J25:	IN	J57:	IN
J27:	IN	J59:	IN
J29:	IN	J61:	IN
J31:	IN	J63:	IN

DIGITAL INPUT MODULE 1160A-200

BLDG #: 1002A
RACK #: R0210
CHASSIS ID: CEX-2A-TVDAMP1
SLOT #: 4
A16 BASE ADDRESS: 0XE000

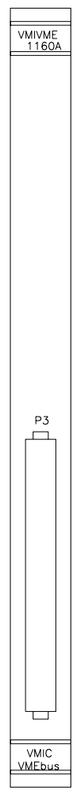

64 PIN RIBBON CABLE

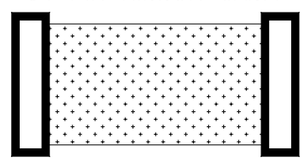

ASSY #
VMIVME-000-64-010

64 PIN TRANSITION PANEL

BLDG: 1002A
RACK: R0210
ID: TB?

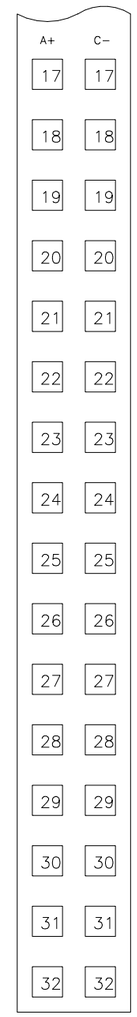

ASSY #
VMIVME-BT01-000

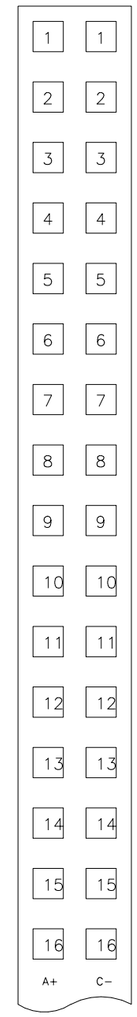

CHAN 0, REF SH 18
BLUE -30db XFER SWITCHES IN/OUT

CHAN 1, REF SH 18
BLUE -30db XFER SWITCHES REMOTE/MANUAL IN

CHAN 2, REF SH 18
BLUE PROGRAMMABLE ATTENUATOR TEST BIT

CHAN 3, REF SH 18
YELLOW -30db XFER SWITCHES IN/OUT

CHAN 4, REF SH 18
YELLOW -30db XFER SWITCHES REMOTE/MANUAL IN

CHAN 5, REF SH 18
YELLOW PROGRAMMABLE ATTENUATOR TEST BIT

-3	-2	-1	REF DESIGNATOR	ITEM NO.	DESCRIPTION	MAT'L DWG NO./BNL NO.
QTY REQD						

INTERPRET IN GENERAL ACCORDANCE WITH ASME Y14.24M-1989

UNLESS OTHERWISE SPECIFIED DIMENSIONS ARE IN INCHES

DECIMAL TOLERANCES
.X ±.030
.XX ±.015
.XXX ±.005
ANGULAR TOLERANCE ± .5°

NA FINISH

BREAK SHARP EDGES
MAX. XX MIN. XX

OUTSTANDING ECN

Q.A. CATEGORY A-3		DATE
DRAWN BY	Al Watson	3/9/00
CHECKED BY		
DESIGN APPROVAL		
ENGINEER APPROVAL	Rob Michnoff	
SUPVR. APPROVAL		

NEXT ASSEMBLY

BROOKHAVEN NATIONAL LABORATORY
UPTON, N.Y. 11973

RHIC CONTROLS

SERVICE BLDG. 1002A DAMPER

1160A-201

SIZE D

94028xxx

DRAWING NUMBER

REV. A

MATERIAL: SCALE: NA WEIGHT: SHEET 28

1 *AUTOCAD

REV.	ZONE	ECN NO.	DATE	BY	CKR	APP.

Controls, C-AD 6/3/2003 2:41 PM page_29.dwg

VMIVME 2170A-210
JUMPER SETTINGS

A2: IN
A3: IN
A4: IN
A5: IN
A6: IN
A7: IN
A8: OUT
A9: IN
A10: IN
A11: IN
A12: IN
A13: OUT
A14: OUT
A15: OUT

DIGITAL OUTPUT MODULE 2170A-210
BLDG #: 1002A
RACK #: R0210
CHASSIS ID: CEX-2A-TVDAMP1
SLOT #: 5
A16 BASE ADDRESS: 0XE100

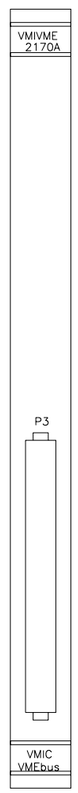

64 PIN RIBBON CABLE

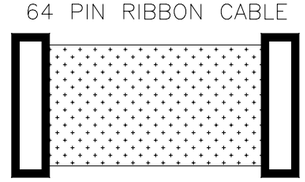

ASSY #
VMIVME-000-64-010

64 PIN TRANSITION PANEL
BLDG: 1002A
RACK: R0210
ID: TB?

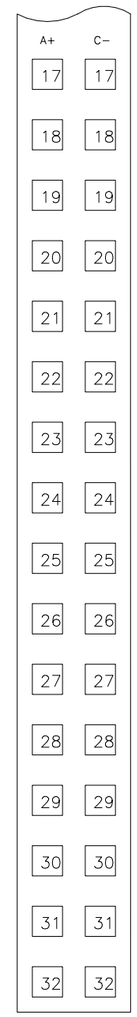

ASSY #
VMIVME-BT01-000

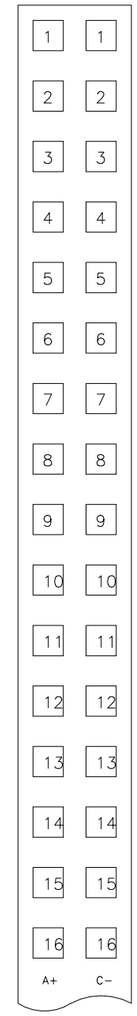

CHAN 0, REF SH 17
HI VOLTAGE POWER SUPPLY ON/OFF

-3	-2	-1	QTY REQD	REF DESIGNATOR	ITEM NO.	DESCRIPTION	MAT'L DWG NO./BNL NO.

INTERPRET IN GENERAL ACCORDANCE WITH ASME Y14.24M-1989
UNLESS OTHERWISE SPECIFIED DIMENSIONS ARE IN INCHES
DECIMAL TOLERANCES
.X ±.030
.XX ±.015
.XXX ±.005
ANGULAR TOLERANCE ± .5°
NA FINISH
BREAK SHARP EDGES
MAX. XX MIN. XX
OUTSTANDING ECN

Q.A. CATEGORY A-3		DATE
DRAWN BY	Al Watson	3/10/00
CHECKED BY		
DESIGN APPROVAL		
ENGINEER APPROVAL	Rob Michnoff	
SUPVR. APPROVAL		
NEXT ASSEMBLY		

BROOKHAVEN NATIONAL LABORATORY
UPTON, N.Y. 11973
RHIC CONTROLS
SERVICE BLDG. 1002A DAMPER
2170A_1

SIZE	DRAWING NUMBER	REV.
D	94028xxx	A

MATERIAL: SCALE: NA WEIGHT: SHEET 29

1 *AUTOCAD

REV.	ZONE	ECN NO.	DATE	BY	CKR	APP.

Controls, C-AD 6/3/2003 2:44 PM page_30.dwg

VMIVME 2170A-210 JUMPER SETTINGS

A2: OUT
A3: IN
A4: IN
A5: IN
A6: IN
A7: IN
A8: OUT
A9: IN
A10: IN
A11: IN
A12: IN
A13: OUT
A14: OUT
A15: OUT

DIGITAL OUTPUT MODULE 2170A-210

BLDG #: 1002A
RACK #: R0210
CHASSIS ID: CEX-2A-TVDAMP1
SLOT #: 6
A16 BASE ADDRESS: 0XE104

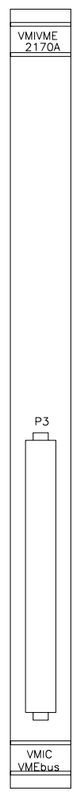

RHIC TUNE METER PROGRAMMABLE ATTENUATOR

BLDG: 1002A
RACK: R0210
ID: BLUE

CONT'D ON SH 14, 18

64 PIN RIBBON CABLE

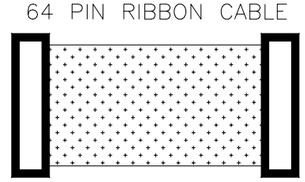

ASSY #
VMIVME-000-64-010

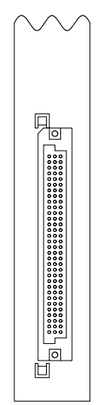

REAR VIEW

ASSY #82045020

CHANNEL DEFINITIONS

	CHAN	DESCRIPTION
TOP POSITION MONITOR PROGRAMMABLE ATTENUATOR	0	.5 db
	1	1 db
	2	2 db
	3	4 db
	4	8 db
	5	16 db
BOTTOM POSITION MONITOR PROGRAMMABLE ATTENUATOR	6	.5 db
	7	1 db
	8	2 db
	9	4 db
	10	8 db
	11	16 db
INSIDE POSITION MONITOR PROGRAMMABLE ATTENUATOR	12	.5 db
	13	1 db
	14	2 db
	15	4 db
	16	8 db
	17	16 db
OUTSIDE POSITION MONITOR PROGRAMMABLE ATTENUATOR	18	.5 db
	19	1 db
	20	2 db
	21	4 db
	22	8 db
	23	16 db
	24	-30 db XFER SWITCHES IN/OUT CONTROL(1 BIT CONTROLS ALL 4 SWITCHES)
	25	TEST BIT, LED ON/OFF
	26	
	27	
	28	
	29	
	30	
	31	

-3	-2	-1	REF DESIGNATOR	ITEM NO.	DESCRIPTION	MAT'L DWG NO.,BNL NO.
QTY REQD						

INTERPRET IN GENERAL ACCORDANCE WITH ASME Y14.24M-1989
UNLESS OTHERWISE SPECIFIED DIMENSIONS ARE IN INCHES
DECIMAL TOLERANCES .X ±.030 .XX ±.015 .XXX ±.005
ANGULAR TOLERANCE ± .5°
OUTSTANDING ECN
NA FINISH
BREAK SHARP EDGES MAX. XX MIN. XX

Q.A. CATEGORY A-3		DATE
DRAWN BY	Ed Koropsak	6/3/03
CHECKED BY		
DESIGN APPROVAL		
ENGINEER APPROVAL	Rob Michnoff	
SUPVR. APPROVAL		
NEXT ASSEMBLY		

BROOKHAVEN NATIONAL LABORATORY
UPTON, N.Y. 11973
RHIC CONTROLS
SERVICE BLDG. 1002A DAMPER
2170A_2

SIZE D
94028xxx
DRAWING NUMBER
REV. A
MATERIAL:
SCALE: NA
WEIGHT:
SHEET 30

1 *AUTOCAD

REV.	ZONE	ECN NO.	DATE	BY	CKR	APP.

VMIVME 2170A-210 JUMPER SETTINGS

A2: IN
A3: OUT
A4: IN
A5: IN
A6: IN
A7: IN
A8: OUT
A9: IN
A10: IN
A11: IN
A12: IN
A13: OUT
A14: OUT
A15: OUT

DIGITAL OUTPUT MODULE 2170A-210

BLDG #: 1002A
RACK #: R0210
CHASSIS ID: CEX-2A-TVDAMP1
SLOT #: 7
A16 BASE ADDRESS: 0XE108

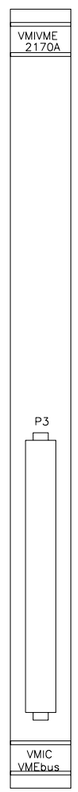

RHIC TUNE METER PROGRAMMABLE ATTENUATOR

BLDG: 1002A
RACK: R0210
ID: YELLOW

CONT'D ON SH 15, 18

64 PIN RIBBON CABLE

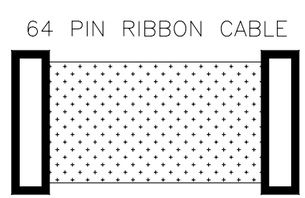

ASSY #
VMIVME-000-64-010

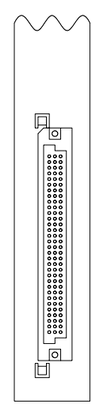

REAR VIEW

ASSY #82045020

CHANNEL DEFINITIONS

	CHAN	DESCRIPTION
TOP POSITION MONITOR PROGRAMMABLE ATTENUATOR	0	.5 db
	1	1 db
	2	2 db
	3	4 db
	4	8 db
	5	16 db
BOTTOM POSITION MONITOR PROGRAMMABLE ATTENUATOR	6	.5 db
	7	1 db
	8	2 db
	9	4 db
	10	8 db
	11	16 db
INSIDE POSITION MONITOR PROGRAMMABLE ATTENUATOR	12	.5 db
	13	1 db
	14	2 db
	15	4 db
	16	8 db
	17	16 db
OUTSIDE POSITION MONITOR PROGRAMMABLE ATTENUATOR	18	.5 db
	19	1 db
	20	2 db
	21	4 db
	22	8 db
	23	16 db
	24	-30 db XFER SWITCHES IN/OUT CONTROL(1 BIT CONTROLS ALL 4 SWITCHES)
	25	TEST BIT, LED ON/OFF
	26	
	27	
	28	
	29	
	30	
	31	

-3	-2	-1	REF DESIGNATOR	ITEM NO.	DESCRIPTION	MAT'L DWG NO.,BNL NO.
QTY REQD						

INTERPRET IN GENERAL ACCORDANCE WITH ASME Y14.24M-1989
UNLESS OTHERWISE SPECIFIED DIMENSIONS ARE IN INCHES
DECIMAL TOLERANCES .X ±.030 .XX ±.015 .XXX ±.005
ANGULAR TOLERANCE ± .5°
OUTSTANDING ECN: NA
FINISH: ✓
BREAK SHARP EDGES MAX. XX MIN. XX

Q.A. CATEGORY A-3
DRAWN BY: Ed Koropsak 6/3/03
CHECKED BY:
DESIGN APPROVAL:
ENGINEER APPROVAL: Rob Michnoff
SUPVR. APPROVAL:
NEXT ASSEMBLY

BROOKHAVEN NATIONAL LABORATORY
UPTON, N.Y. 11973
RHIC CONTROLS
SERVICE BLDG. 1002A DAMPER
2170A_3
SIZE D
94028xxx
DRAWING NUMBER
REV. A
MATERIAL:
SCALE: NA
WEIGHT:
SHEET 31

Controls, C-AD 6/4/2003 8:51 AM page_32.dwg

REV.	ZONE	ECN NO.	DATE	BY	CKR	APP.

DIGITAL INPUT MODULE 1160A-200
BLDG #: 1002A
RACK #: R0210
CHASSIS ID: CEX-2A-TVDAMP1
SLOT #: 9
A16 BASE ADDRESS: 0XE020

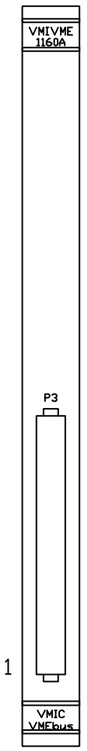

VMIVME 1160A-200
BASE ADDRESS SWITCH SETTINGS

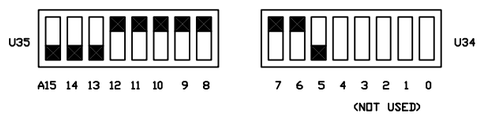

VMIVME 1160A-200
JUMPER SETTINGS

J1:	IN	J33:	IN
J3:	IN	J35:	IN
J5:	IN	J37:	IN
J7:	IN	J39:	IN
J9:	IN	J41:	IN
J11:	IN	J43:	IN
J13:	IN	J45:	IN
J15:	IN	J47:	IN
J17:	IN	J49:	IN
J19:	IN	J51:	IN
J21:	IN	J53:	IN
J23:	IN	J55:	IN
J25:	IN	J57:	IN
J27:	IN	J59:	IN
J29:	IN	J61:	IN
J31:	IN	J63:	IN

DIGITAL OUTPUT MODULE 2170A-210
BLDG #: 1002A
RACK #: R0210
CHASSIS ID: CEX-2A-TVDAMP1
SLOT #: 8
A16 BASE ADDRESS: 0XE10C

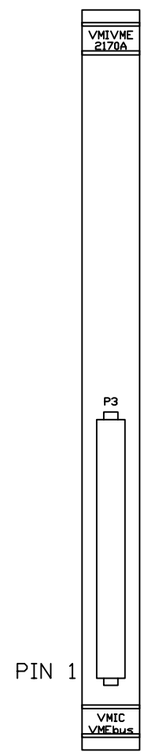

64 PIN RIBBON CABLE

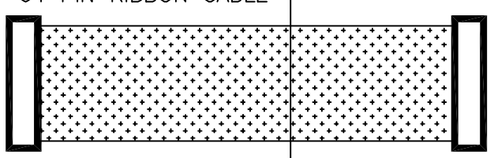

ASSY #
VMIVME-000-64-010

64 PIN RIBBON CABLE

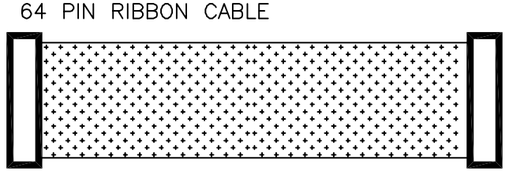

ASSY #
VMIVME-000-64-010

1160 INPUT

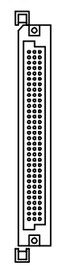

2170 OUTPUT

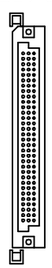

NIM 1

TO NIM-2A-TVDAMP1
SLOT 2

NIM 2

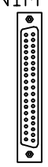

TO NIM-2A-TVDAMP1
SLOT 4

NIM 3

TO NIM-2A-TVDAMP1
SLOT 6

NIM 4

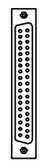

TO NIM-2A-TVDAMP1
SLOT 8

REAR VIEW

Patch Panel Breakout.

VME OUTPUT CH #	64 PIN CONN		#1 NIM INPUT 37 PIN 'D'		VME INPUT CH#	#1 NIM OUTPUT 64 PIN CONN		37 PIN 'D'	
0	C1	GRD	1		0	C1	GRD	9	
	A1	SIG	20	LSB		A1	SIG	28	LSB
1	C2		2		1	C2		10	
	A2		21			A2		29	
2	C3		3		2	C3		11	
	A3		22			A3		30	
3	C4		4		3	C4		12	
	A4		23			A4		31	
4	C5		5		4	C5		13	
	A5		24			A5		32	
5	C6		6		5	C6		14	
	A6		25			A6		33	
6	C7		7		6	C7		15	
	A7		26			A7		34	
7	C8	GRD	8		7	C8	GRD	16	
	A8	SIG	27	MSB		A8	SIG	35	MSB
			#2 NIM INPUT			#2 NIM OUTPUT			
8	C9	GRD	1		8	C9	GRD	9	
	A9	SIG	20	LSB		A9	SIG	28	LSB
9	C10		2		9	C10		10	
	A10		21			A10		29	
10	C11		3		10	C11		11	
	A11		22			A11		30	
11	C12		4		11	C12		12	
	A12		23			A12		31	
12	C13		5		12	C13		13	
	A13		24			A13		32	
13	C14		6		13	C14		14	
	A14		25			A14		33	
14	C15		7		14	C15		15	
	A15		26			A15		34	
15	C16	GRD	8		15	C16	GRD	16	
	A16	SIG	27	MSB		A16	SIG	35	MSB
			#3 NIM INPUT			#3 NIM OUTPUT			
16	C17	GRD	1		16	C17	GRD	9	
	A17	SIG	20	LSB		A17	SIG	28	LSB
17	C18		2		17	C18		10	
	A18		21			A18		29	
18	C19		3		18	C19		11	
	A19		22			A19		30	
19	C20		4		19	C20		12	
	A20		23			A20		31	
20	C21		5		20	C21		13	
	A21		24			A21		32	
21	C22		6		21	C22		14	
	A22		25			A22		33	
22	C23		7		22	C23		15	
	A23		26			A23		34	
23	C24	GRD	8		23	C24		16	
	A24	SIG	27	MSB		A24		35	MSB
			#4 NIM INPUT			#4 NIM OUTPUT			
24	C25	GRD	1		24	C25	GRD	9	
	A25	SIG	20			A25	SIG	28	LSB
25	C26		2		25	C26		10	
	A26		21			A26		29	
26	C27		3		26	C27		11	
	A27		22			A27		30	
27	C28		4		27	C28		12	
	A28		23			A28		31	
28	C29		5		28	C29		13	
	A29		24			A29		32	
29	C30		6		29	C30		14	
	A30		25			A30		33	
30	C31		7		30	C31		15	
	A31		26			A31		34	
31	C32	GRD	8		31	C32	GRD	16	"N/C 17,18.19,36,37"
	A32	SIG	27	MSB		A32	SIG	35	MSB

BUNCH TRACKER VME/NIM PINOUT 9/9/02 F.D.

VMIVME 2170A-210
JUMPER SETTINGS

A2:	OUT
A3:	OUT
A4:	IN
A5:	IN
A6:	IN
A7:	IN
A8:	OUT
A9:	IN
A10:	IN
A11:	IN
A12:	IN
A13:	OUT
A14:	OUT
A15:	OUT

DIGITAL I/O TO NIM SIGNAL CONDITIONER MODULES.
8 INPUTS AND 8 OUTPUTS EACH.

-3	-2	-1	REF DESIGNATOR	ITEM NO.	DESCRIPTION	MAT'L DWG NO./INL NO.
QTY REQD						

INTERPRET IN GENERAL ACCORDANCE WITH ASME Y14.24M-1989

UNLESS OTHERWISE SPECIFIED DIMENSIONS ARE IN INCHES
DECIMAL TOLERANCES .X ±.030 .XX ±.015 .XXX ±.005
ANGULAR TOLERANCE ± .5°

OUTSTANDING ECN | NA FINISH | BREAK SHARP EDGES MAX. XX MIN. XX

Q.A. CATEGORY A-3 | DATE

DRAWN BY	Ed Koropsak	5/14/03
CHECKED BY		
DESIGN APPROVAL		
ENGINEER APPROVAL	Rob Michnoff	
SUPVR. APPROVAL		

NEXT ASSEMBLY

BROOKHAVEN NATIONAL LABORATORY
UPTON, N.Y. 11973
RHIC CONTROLS
SERVICE BLDG. 1002A DAMPER
I/O TO NIM MODULES

SIZE D | DRAWING NUMBER 94028xxx | REV. A

MATERIAL: | SCALE: NA | WEIGHT: | SHEET 32

*AUTOCAD

PDF created with FinePrint pdfFactory Pro trial version http://www.fineprint.com

REV.	ZONE	ECN NO.	DATE	BY	CKR	APP.

Controls, C-AD 6/10/2003 2:34 PM page_33.dwg

DEVICE: BUS EXTENDER
BLDG #: 1002A
RACK #: R0210
CHASSIS ID: CFE-2A-TVDAMP1
SLOT #: 21
A24 BASE ADDRESS: NA

DEVICE: BUS EXTENDER
BLDG #: 1002A
RACK #: R0210
CHASSIS ID: CEX-2A-TVDAMP1
SLOT #: 1
A24 BASE ADDRESS: NA

DEVICE: V109
BLDG #: 1002A
RACK #: R0210
CHASSIS ID: CEX-2A-TVDAMP1
SLOT #: 3
A24 BASE ADDRESS: 0x008000

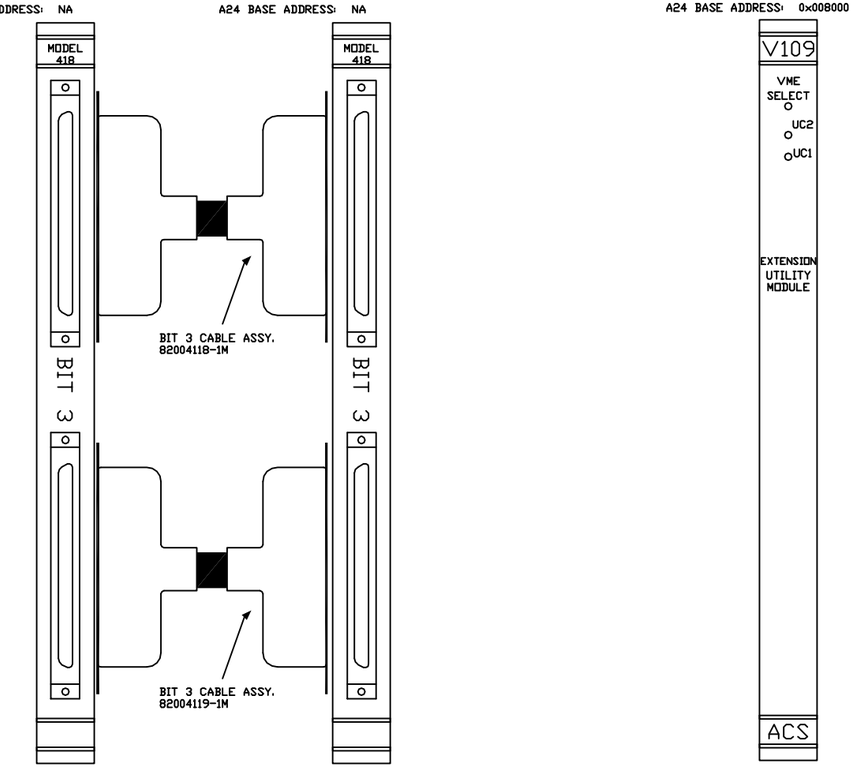

JUMPER LIST

C/S OUT
P/S IN
SYS IN
I/O 8-15 NOT USED

JUMPER LIST

C/S OUT
P/S OUT
SYS IN
I/O 8-15 NOT USED

V109 JUMPER LIST

E2-E13
E3-E14
E4-E15
E5-E16
E6-E17
E7-E18
E8-E19
E9-E20
E10-E23
E11-E21
E12-E25
E22-E25
SW1=OPEN
SW2=CLOSED
SW3=OPEN
SW4=OPEN

-3	-2	-1	REF DESIGNATOR	ITEM NO.	DESCRIPTION	MAT'L DWG NO./INE NO.
QTY REQD						

INTERPRET IN GENERAL ACCORDANCE WITH ASME Y14.24M-1989

UNLESS OTHERWISE SPECIFIED DIMENSIONS ARE IN INCHES

DECIMAL TOLERANCES
.X ±.030
.XX ±.015
.XXX ±.005
ANGULAR TOLERANCE
± .5°

NA FINISH

BREAK SHARP EDGES
MAX. XX MIN. XX

OUTSTANDING ECN

Q.A. CATEGORY A-3

		DATE
DRAWN BY	Ed Koropsak	5/16/03
CHECKED BY		
DESIGN APPROVAL		
ENGINEER APPROVAL	Rob Michnoff	
SUPVR. APPROVAL		

NEXT ASSEMBLY

BROOKHAVEN NATIONAL LABORATORY
UPTON, N.Y. 11973

RHIC CONTROLS

SERVICE BLDG. 1002A DAMPER

BIT 3 MODULE & V109

SIZE D | DRAWING NUMBER 94028xxx | REV. A

MATERIAL: ——— SCALE: FULL WEIGHT: – SHEET 33

*AUTOCAD

PDF created with FinePrint pdfFactory Pro trial version http://www.fineprint.com